REVISIONS				
ZONE	SYM	DESCRIPTION	DATE	APPROVAL
	-	-	-	

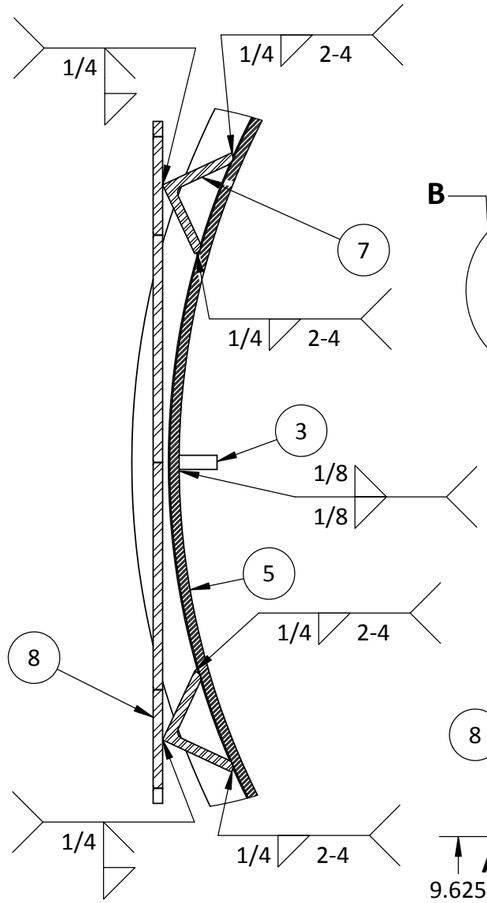

DETAIL B
SCALE 1 : 4

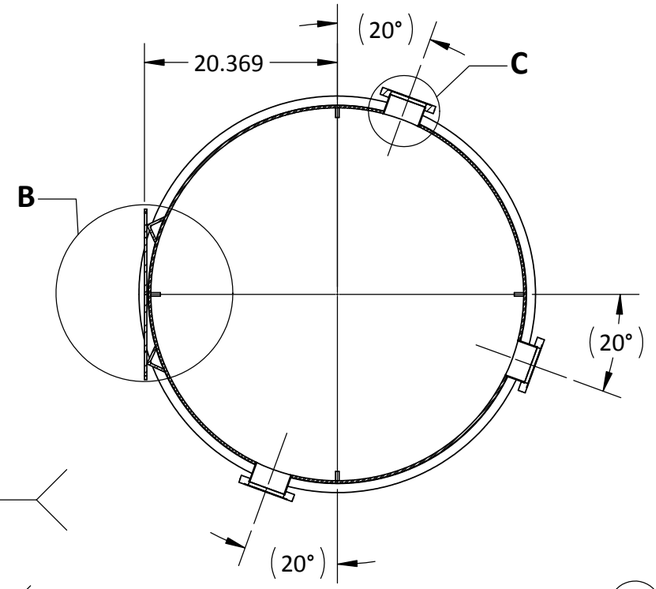

SECTION A-A

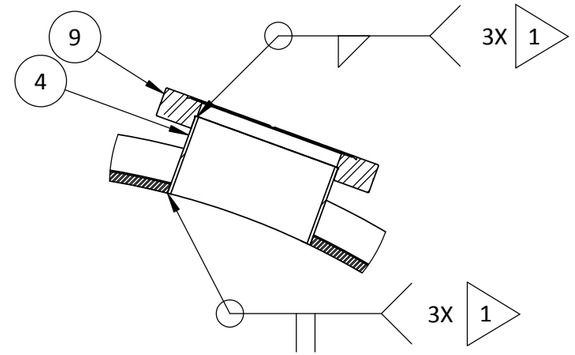

DETAIL C
SCALE 1 : 4

ISOMETRIC VIEW

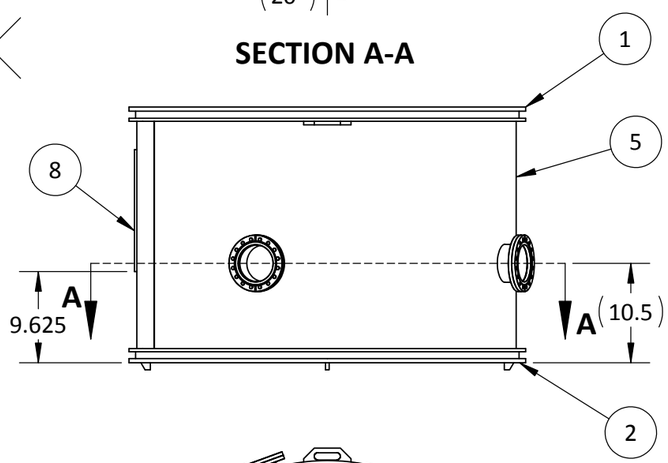

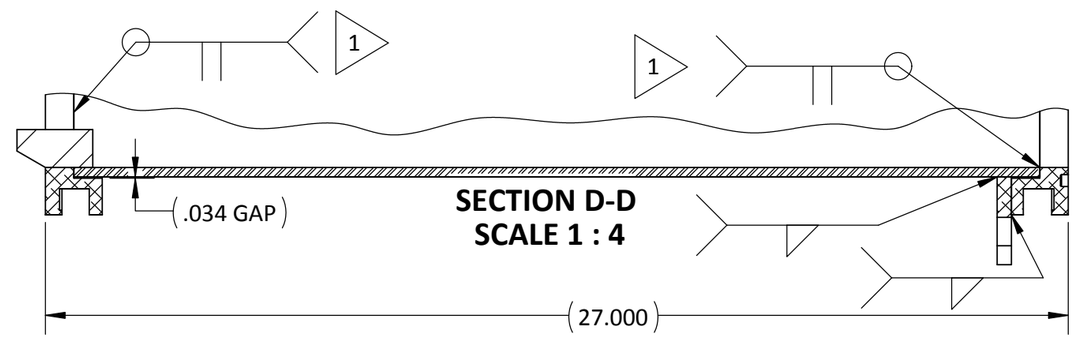

SECTION D-D
SCALE 1 : 4

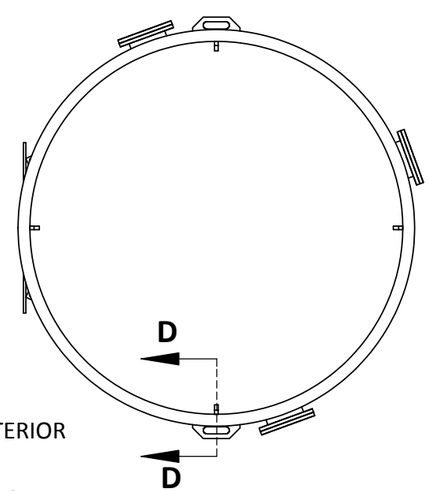

NOTES:

1. WELD ALL JOINTS VACUUM TIGHT
2. REMOVE BURRS AND BREAK EDGES
3. INTERIOR FINISH PART 32 ALL OVER
   POLISH ALL INTERIOR WELDS, ELECTROPOLISH INTERIOR
   EXTERIOR FINISH PART 125 ELECTROPOLISH OPTION

ITEM NO.	PARTNO	DESCRIPTION	QTY.
1	120603311	TOP CHAMBER TOP FLANGE	1
2	120603312	TOP CHAMBER BASE FLANGE	1
3	120603313	TOP CHAMBER ALIGNMENT FOOT	4
4	120603314	TOP CHAMBER TUBE VIEWPORT	3
5	120603315	TOP CHAMBER CYLINDER	1
6	120603316	TOP CHAMBER LIFTING EAR	2
7	120603317	TOP CHAMBER VERTICAL ANGLE	2
8	120603318	TOP CHAMBER CARRIAGE HINGE PLATE	1
9	KURT LESKER F0600X400N	FLANGE CF 6.00 FOR 4.00 TUBE	3

SEE ENGINEERING RECORDS
NEXT ASSY | USED ON
APPLICATION

TOLERANCE EXCEPT AS NOTED
DIMENSIONS ARE IN INCHES
DECIMAL .XX = ±0.020 .XXX = ±0.005
ANGLE .X = ±1°
MATERIAL
HEAT TREAT
FINAL FINISH 3

ORIGINAL DATE OF DRAWING 8/5/12
DRAFTSMAN | STRESS
ENGINEER BCW | MNFG
MATERIALS | QA
CHECKER
SUBMITTED
APPROVED

TOP CHAMBER WELDMENT

EST WT 349.67 LBS | SCALE 1:16 | CODE 339B2

GEORGE C. MARSHALL SPACE FLIGHT CENTER
NATIONAL AERONAUTICS AND SPACE ADMINISTATION
Marshall Space Flight Center, AL 35812

DWG SIZE B 120603310
SHEET 1 OF 1