REVISIONS				
ZONE	SYM	DESCRIPTION	DATE	APPROVAL
	-	-	-	

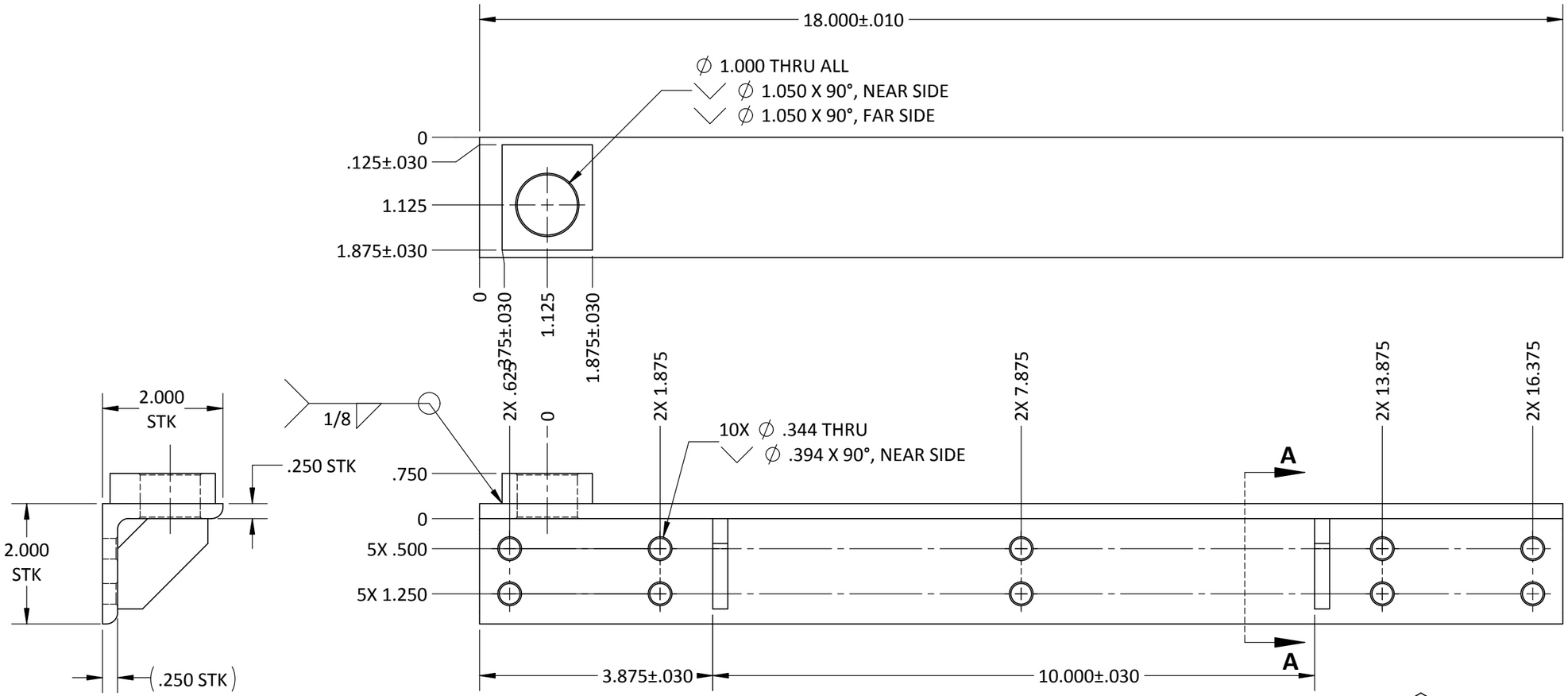

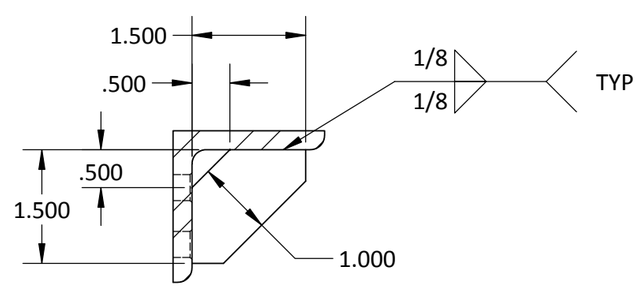

SECTION A-A

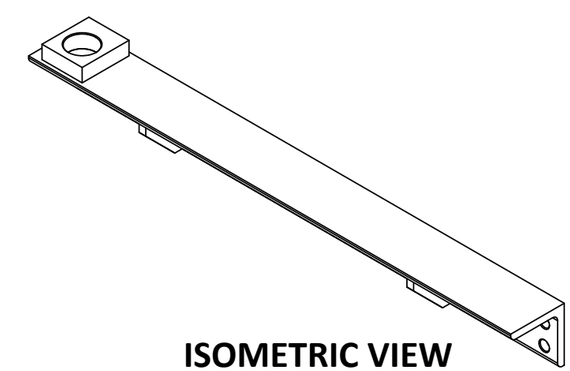

ISOMETRIC VIEW

NOTES:

1. MATERIAL: MILD CARBON STEEL PLATE AND ANGLE
2. REMOVE BURRS AND BREAK EDGES
3. FINISH YELLOW ZINIC CHROMATE COATING

SEE ENGINEERING RECORDS		TOLERANCE EXCEPT AS NOTED DIMENSIONS ARE IN INCHES DECIMAL .XX = ±0.020 .XXX = ±0.005 ANGLE .X = ±1°	ORIGINAL DATE OF DRAWING 8/5/12	TOP CHAMBER TOP HORIZONTAL HINGE WELDMENT	GEORGE C. MARSHALL SPACE FLIGHT CENTER NATIONAL AERONAUTICS AND SPACE ADMINISTRATION Marshall Space Flight Center, AL 35812
		MATERIAL 1	DRAFTSMAN / STRESS		
			ENGINEER BCW / MNFG		
			MATERIALS / QA		
		HEAT TREAT	CHECKER		DWG SIZE B 120603301
			SUBMITTED		
NEXT ASSY	USED ON	FINAL FINISH 3	APPROVED	EST WT 5.07 LBS / SCALE 1:2 / CODE 339B2	SHEET 1 OF 1
APPLICATION					