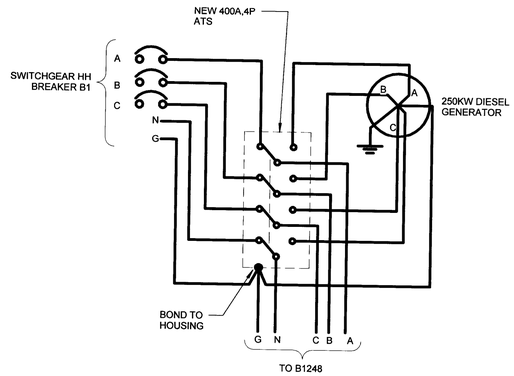


## ATS/ GENERATOR CONNECTION

## ELECTRICAL NOTES

1. CONSTRUCTION FOR BUILDING 1248 ADDITION WILL BE DONE IN TWO PHASES:

PHASE 1:
- A NEW EXTENSION TO THE BUILDING TO PROVIDE FOR IMPROVED PERSONNEL ACCOMMODATIONS AND UPGRADE POWER FEED TO ACCOMMODATE ALL OF THE ELECTRICAL LOADS 100% EMERGENCY POWER CAPABILITY.
- EXISTING BUILDING TO REMAIN UNTOUCHED.

PHASE 2:
- RENOVATE THE EXISTING BUILDING AND UPGRADE ELECTRICAL DISTRIBUTION WITH POWER ULTIMATELY BEING FED FROM ONLY ONE MAIN FEEDER.

## REMOVAL NOTES

1 DE-ENERGIZE, DISCONNECT AND REMOVE 300A SWITCHGEAR SENSOR PLUG. FIELD VERIFY MANUFACTURER AND CONFIGURATION FOR REQUIRED REPLACEMENT.

2 DE-ENERGIZE, DISCONNECT AND REMOVE AUTOMATIC TRANSFER SWITCH, GENERATOR, SAFETY SWITCH AND ASSOCIATED FEEDER WIRES AND ACCESSIBLE CONDUIT. CAP UN-USED CONDUITS AND LABEL BOTH ENDS INDICATING ENDING LOCATION WITH 3" x 6" COPPER PLATE WITH EMBOSSED 3/8" LETTERING.

3 DE-ENERGIZE, DISCONNECT AND REMOVE INDICATED PANELBOARDS AND ASSOCIATED PANEL FEEDERS.

4 DE-ENERGIZE, DISCONNECT AND REMOVE INDICATED DRY TYPE TRANSFORMER AND ASSOCIATED FEEDERS.

5 PANELBOARD TO REMAIN. FIELD VERIFY MANUFACTURER AND DIMENSIONS FOR REPLACEMENT OF FRONT COVER.

6 DISCONNECT AND REMOVE FEEDER WIRES FROM SUBSTATION ALL THE WAY TO PANEL P-100

7 DISCONNECT AND REMOVE CONNCECTIONS TO METER FROM SWITCHGEAR HH FEEDER BREAKER A2 MAINTAIN INTEGRITY OF EXISTING METER FOR RE-USE.

## NEW WORK NOTES

1 REPLACE SENSOR PLUG WITH NEW 400A AND SET LONG TIME DELAY TO 400A. SEE DRAWING 1290607 FOR UNDERGROUND ELECTRICAL NEW WORK.

2 PROVIDE NEW GENERATOR, ASSOCIATED EQUIPMENT, FEEDERS AND CONNECT AS INDICATED.

3 PROVIDE NEW PANELBOARDS, ASSOCIATED FEEDERS AND CONNECT AS INDICATED.

4 PROVIDE NEW COPPER WINDING TRANSFORMER, DISCONNECT SWITCH AS APPLICABLE AND CONNECT AS INDICATED

5 EXISTING PANEL IS RELATIVELY NEW. REPLACE FRONT COVER WITH HINGED TO BOX TYPE TO PROVIDE GUTTER SPACE ACCESS WITH LOCKABLE CENTER DOOR FOR CIRCUIT BREAKER ACCESS ONLY.

6 PROVIDE NEW 12/C #20, STRANDED COPPER, 300 VOLT, SHIELDED, COLOR CODED CONTROL CABLE FOR USE WITH AUTOMATIC TRANSFER SWITCH AND GENERATOR CONTROL CABINET.

7 PROVIDE WIRING AND ASSOCIATED DEVICES TO RE-ASSIGN TERMINATION OF EXISTING METER TO SWITCHGEAR HH BREAKER B1.

## LEGEND

- EXISTING TO REMAIN
- EXISTING TO BE REMOVED
- NEW WORK
- GENERATOR, RATING INDICATED
- AUTOMATIC TRANSFER SWITCH
- TRANSFORMER
- FUSED DISCONNECT SWITCH
- NON-FUSED DISCONNECT SWITCH
- CIRCUIT BREAKER
- PANELBOARD
- HAND HOLE
- POINT OF CONNECTION NEW TO EXISTING
- POINT OF DISCONNECTION
- EXISTING METER
- GROUND CONNECTION PER NFPA 70

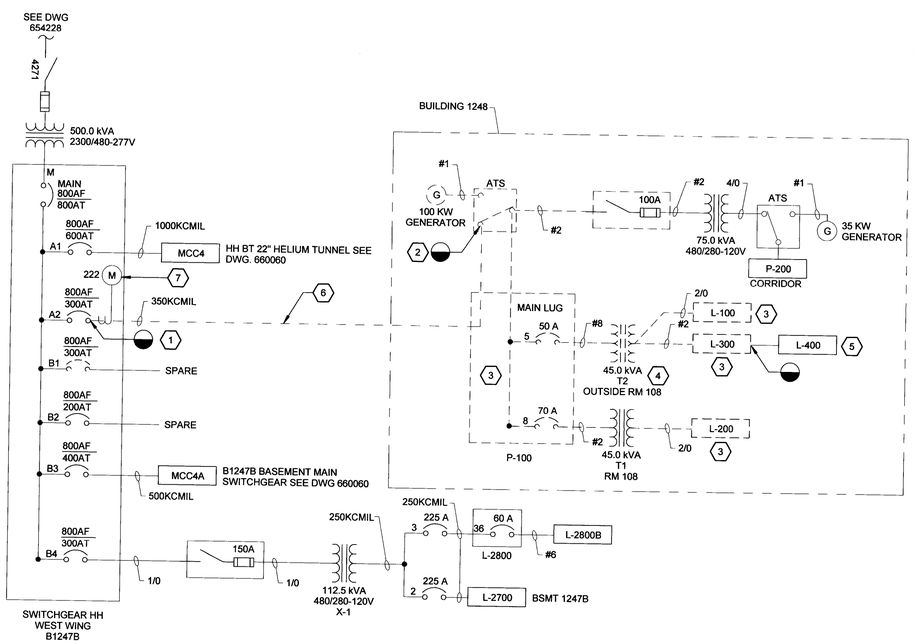


## EXISTING CONDITIONS

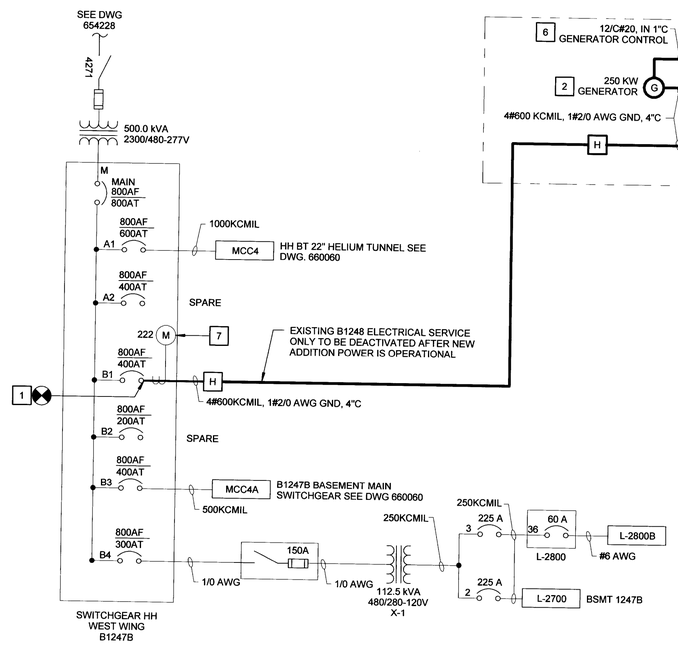


## NEW CONDITIONS

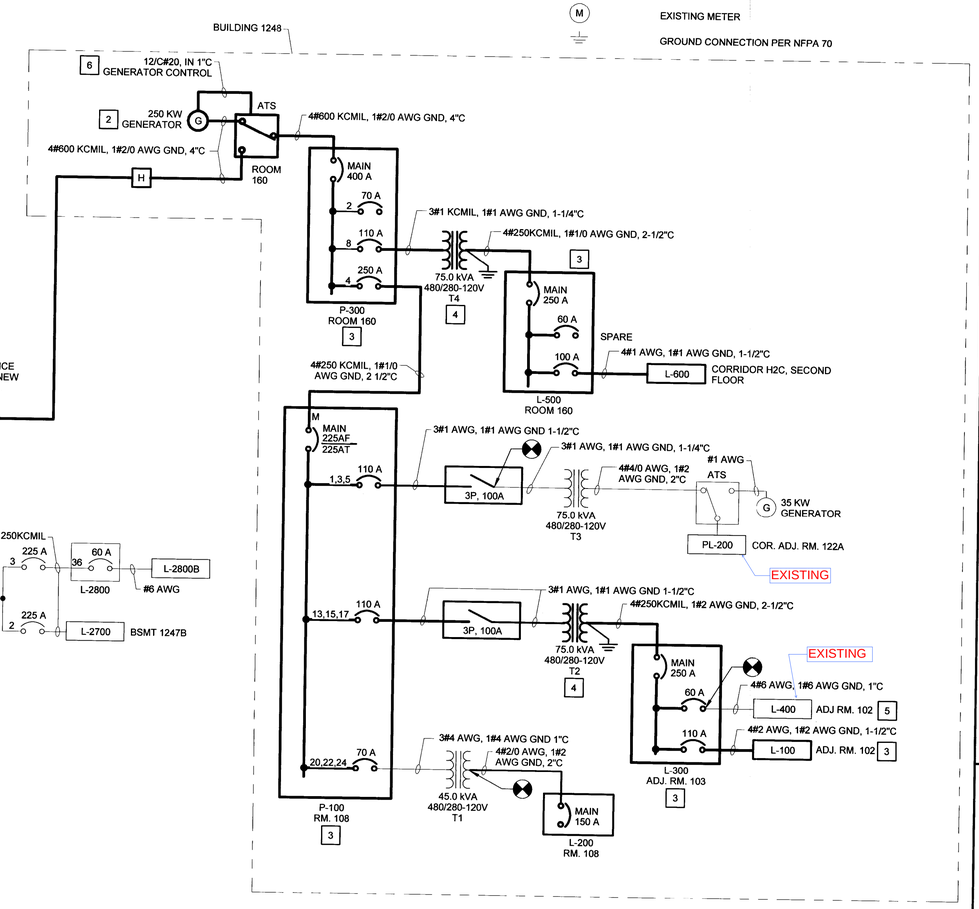


# B1248 ONE-LINE DIAGRAM

REVISIONS

| DATE | LTR | FREQ | DESCRIPTION | BY | CHECK | APPD |
|---|---|---|---|---|---|---|
| | | | | | | |

REVISIONS

| DATE | LTR | FREQ | DESCRIPTION | BY | CHECK | APPD |
|---|---|---|---|---|---|---|
| | | | | | | |

11/28/2012 2:17:15 PM FINAL

JE JACOBS

ROME GROUP
Langley Research Center
Hampton, VA 23681

WORK ORDER NO. AE03298

| APPROVALS | DATE |
|---|---|
| DRAWN K. FALZONE | 11/27/12 |
| ENG./DES. J. MEDRANA | 11/27/12 |
| CHECK C. HORNE | 11/27/12 |
| PROJ. MGR W. RASH | 11/27/12 |
| SUPV. | 11/27/12 |

APPROVALS

| | NAME | ORGANIZATION | DATE |
|---|---|---|---|
| DRAWN | | ROME/JMC | 12/7/12 |
| DESIGNED | | JFAS | 12/18/12 |
| CHECKED | | SPE Electrical | 12/18/12 |
| APPROVED | | EMD | 12/18/12 |
| TECH. PROJ. ENG. | | | 12/18/12 |
| RES. PROJ. ENG. | | | |

| | DATE |
|---|---|
| | |
| | |
| | |
| | 1/10/13 |
| | 12/18/2012 |

TOLERANCE ON DIMENSIONS UNLESS SHOWN OTHERWISE — ANGULAR ± — .XX (2 DECIMAL PLACES) ±.02 — .XXX (3 DECIMAL PLACES) ±.005

SURFACE FINISH IN MICRONICHES RMS UNLESS SHOWN OTHERWISE

FOR DRAWING INDEX SEE DRAWING 1290554

NATIONAL AERONAUTICS & SPACE ADMINISTRATION
LANGLEY RESEARCH CENTER
HAMPTON, VIRGINIA 23681-2199

PROJECT TITLE: UPGRADES TO FIRE STATION AND EMERGENCY OPERATIONS CENTER

DRAWING TITLE: ONE-LINE DIAGRAM

BUILDING NO. 1248 | SIZE D | DRAWING NO. 1290608 | SHEET NO. E-601 | LATEST REV.