MIL-S-26196E(USAF)
1 November 1961

Superseding
MIL-S-26196D(USAF)
6 January 1961

MILITARY SPECIFICATION

SEMITRAILER, TANK AF/M32A-4A

1. SCOPE

1.1 This specification covers a lightweight 4,000-gallon liquid capacity tank semitrailer, designated AF/M32A-4A.

2. APPLICABLE DOCUMENTS

2.1 The following documents, of the issue in effect on date of invitation for bids, form a part of this specification to the extent specified herein:

SPECIFICATIONS

Federal

FF-P-101	Padlocks
QQ-S-781	Strapping, Flat
TT-E-489	Enamel, Alkyd, Gloss, (For Exterior And Interior Surfaces)
UU-T-81	Tags, Shipping And Stock
ZZ-I-550	Inner Tube, Pneumatic Tire
ZZ-T-381	Tires, Pneumatic, Vehicle And Portable Equipment
PPP-C-843	Cushioning Material, Cellulosic
PPP-T-60	Tape, Pressure Sensitive Adhesive, Waterproof-For Packaging And Sealing

Military

JAN-P-100	Packaging And Packing For Overseas Shipment, General Specification
MIL-P-116	Preservation, Methods Of
MIL-B-121	Barrier Material, Greaseproofed, Waterproofed, Flexible
MIL-P-130	Paper, Wrapping, Laminated And Creped
MIL-B-131	Barrier Material, Water Vaporproofed, Flexible
MIL-A-148	Aluminum Foil

FSC 2330

AF - THE REPUBLICAN PRESS, Hamilton, Ohio
November 29, 1961 1300

Provided by IHS
No reproduction or networking permitted without license from IHS
Licensee=NASA Technical Standards 4/9972545004, User=Norman, Raymond
Not for Resale, 01/15/2013 06:47:30 MST

MIL-T-740	Trucks, 5-Ton, 6 X 6, Series M39
MIL-R-3065	Rubber, Fabricated Parts
MIL-C-3254	Coating System, Bridging, Strippable, Sprayable
MIL-D-3464	Disiccants, Activated, Bagged, Packaging Use And Static Dehumidification
MIL-F-3541	Fittings, Lubrication
MIL-P-4185	Paper, Tissue, Wrapping
MIL-E-4970	Environmental Testing, Ground Support Equipment, General Specification For
MIL-T-5542	Thread Compound, Antiseize And Sealing, Oxygen Systems
MIL-I-6866	Inspection, Penetrant Method Of
MIL-I-6868	Inspection Process, Magnetic Particle
MIL-T-7003	Trichlorethylene, Stabilized Degreasing
MIL-E-7589	Extinguisher, Fire, Bromochloromethane, Portable, Type D-2
MIL-M-8090	Mobility Requirements, Ground Support Equipment, General Specification For
MIL-S-8141	Strippable Plastic Coating, Sprayable
MIL-A-8421	Air Transportability Requirements, General Specification For
MIL-S-8512	Support Equipment, Aeronautical, Special, General Specification For The Design Of
MIL-T-9107	Test Reports, Preparation Of
MIL-W-10434	Windows, Protective Envelope (For Installation In Water-Vaporproof Barriers)
MIL-T-12459	Tire, Pneumatic, For Military Ground Vehicles
MIL-R-13689	Reflectorized Sheeting, Adhesive (Retro-Reflective)
MIL-T-45341	Trucks And Truck Tractors; Commercial, Gasoline And Diesel Engine Driven, 29,500 To 64,000 Pounds G.V.W., 6 X 4
MIL-D-70327	Drawings, Engineering And Associated Lists

STANDARDS

Federal

595	Colors

Provided by IHS
No reproduction or networking permitted without license from IHS
Licensee=NASA Technical Standards 4/9972545004, User=Norman, Raymond
Not for Resale, 01/15/2013 06:47:30 MST
BEST COPY AVAILABLE

Air Force-Navy Aeronautical

AND10387	Drill Sizes And Drilled Hole Tolerances Twist

Military

MIL-STD-10	Surface Roughness Waviness And Lay
MIL-STD-129	Marking For Shipment And Storage
MIL-STD-130	Identification Marking Of U. S. Military Property
MIL-STD-143	Specifications And Standards Order Of Precedence For The Selection Of
MIL-STD-281	Processing Of Motor Vehicles And Related Material For Shipment And Storage
MIL-STD-808	Finishes, Protective, And Codes, For Finishing Schemes For Ground And Ground Support Equipment

DRAWINGS

Ordnance Corps

C7367608	Fifth Wheel, Military Type
C8984433	Seat, LOX Coupling, 3-1/2 Inch
C8984434	Nut, LOX Coupling, 3-1/2 Inch
C8984435	Cone, LOX Coupling, 3-1/2 Inch
C8984990	LOX Cap, 3-1/2 Inch
C8984991	LOX Plug, 3-1/2 Inch
C8987830	Assembly, LOX Coupling, Male Half, All Sizes
C8987831	Assembly, LOX Coupling, Female Half, All Sizes
B8987832	Gasket, LOX and LN_2, All Sizes
B8987839	Ring, Retaining, LOX and LN_2 All Sizes
C8987855	Seat, LOX Coupling, 1 Inch
C8987856	Cone, LOX Coupling, 1 Inch
C8987857	Nut, LOX Coupling, 1 Inch
C8987869	LOX Cap, 1 Inch
C8987870	LOX Plug, 1 Inch
C8987876	Seat, LN_2 Coupling, 1 Inch
C8987877	Cone, LN_2 Coupling, 1 Inch
C8987878	Nut, LN_2 Coupling, 1 Inch
C8987885	Seat, LN_2 Coupling, 3 Inch
C8987886	Cone, LN_2 Coupling, 3 Inch
C8987887	Nut, LN_2 Coupling, 3 Inch
C8987888	Assembly, LN_2 Coupling, Male Half, All Sizes

Provided by IHS
No reproduction or networking permitted without license from IHS
Licensee=NASA Technical Standards 4/9972545004, User=Norman, Raymond
Not for Resale, 01/15/2013 06:47:30 MST
BEST COPY AVAILABLE

C8987889	Assembly, LN_2 Coupling, Female Half, All Sizes
C8987890	LN_2 Cap, 1 Inch
C8987891	LN_2 Plug, 1 Inch
C8987896	LN_2 Cap, 3 Inch
C8987897	LN_2 Plug, 3 Inch

Air Force

49A3818	Connector-Female, Liquid Oxygen Tank
49A3819	Nut-Coupling, Liquid Oxygen Tank, Medium
49A3820	Connector-Male, Liquid Oxygen Tank, Medium
52A3750	Cap Assembly, Dust, Liquid Oxygen Tank, Medium

PUBLICATION

Air Force-Navy Aeronautical Bulletin

166 Colors, List of Standard Aircraft Glossy

(Copies of specifications, standards, drawings, and publications required by contractors in connection with specific procurement functions should be obtained from the procuring activity or as directed by the contracting officer.)

2.2 Other publications.- The following documents form a part of this specification to the extent specified herein. Unless otherwise indicated, the issue in effect on date of invitation for bids shall apply.

American Society of Mechanical Engineers

ASME Boiler and Pressure Vessel Code

Section VIII Unfired Pressure Vessels

(Copies of the ASME code may be obtained upon application to the American Society of Mechanical Engineers, 29 West 39th Street, New York 18, New York.)

Official Classification Committee

Uniform Freight Classification Rules

(Application for copies of the freight classification rules should be addressed to the Official Classification Committee, 1 Park Avenue at 33rd Street, New York 16, New York.)

Provided by IHS
No reproduction or networking permitted without license from IHS
Licensee=NASA Technical Standards 4/9972545004, User=Norman, Raymond
Not for Resale, 01/15/2013 06:47:30 MST
BEST COPY AVAILABLE

American Trucking Association

National Motor Freight Classification Rules

(Application for copies of the National Motor Freight Classification Rules should be addressed to the American Trucking Association, 1424 16th Street, N. W., Washington, D. C.)

3. REQUIREMENTS

3.1 Preproduction.- This specification makes provisions for preproduction testing.

3.2 Components.- The semitrailer shall be made up from the following major assemblies. Each assembly shall include all parts, controls, instruments, and accessories necessary for its safe and effective operation.

Description	See Requirement
a. Liquid storage tank assembly	3.9.1
b. Pressure buildup system	3.9.2
c. Control and accessory housing assembly	3.9.3
d. Running gear assembly	3.9.4
e. Accessories	3.9.5.

3.3 General specifications.- The requirements of MIL-S-8512 and those specified for type III, group D items in MIL-M-8090 apply as requirements of this specification with the exceptions and additions specified herein. When the specifications conflict, this specification shall govern.

3.4 Selection of specifications and standards.- Specifications and standards for necessary commodities and services not specified herein shall be selected in accordance with MIL-STD-143.

Provided by IHS
No reproduction or networking permitted without license from IHS
Licensee=NASA Technical Standards 4/9972545004, User=Norman, Raymond
Not for Resale, 01/15/2013 06:47:30 MST
BEST COPY AVAILABLE

3.5 Materials

3.5.1 Fungus-proof materials.- Materials that are nutrients for fungi shall not be used where it is practical to avoid them. Where used and not hermetically sealed, they shall be compounded or treated as necessary to insure against fungus attack. Fungicidal treatment will not be necessary for materials used in a hermetically sealed enclosure.

3.5.2 Metals.- Wherever practicable, lightweight metals shall be used in the construction of the semitrailer.

3.5.2.1 All metallic surfaces of the semitrailer and components thereof that contact high-purity oxygen or liquid nitrogen, or that are in a location where they will be chilled sufficiently during operation to cause condensation of moisture from the atmosphere, shall be fabricated from corrosion-resistant materials.

3.5.3 Gasketing and insulating materials.- Plastic, rubberlike, rubber, or similar gasketing and insulating materials shall be compounded to insure their suitability for the intended application and, where applicable, their resistance to hydrocarbons and low temperatures.

3.5.3.1 Packings, gaskets, seals, and other nonmetallic components that come into contact with high-purity oxygen shall be compounded of materials compatible with use in a pure oxygen atmosphere under the conditions to which they will be subjected, and that are not adversely affected or deteriorated by continued use in an oxygen or nitrogen atmosphere.

3.5.4 Rubber goods.- All rubber goods such as air hoses, door seals, et cetera, shall be fabricated from rubber compounds conforming to MIL-R-3065.

3.5.5 Combustible materials.- Readily combustible materials shall not be used where they contact high-purity oxygen.

3.6 General design.- The semitrailer shall be a readily mobile, lightweight, large-capacity, self-contained liquid-oxygen and liquid-nitrogen storage and transport container designed for:

a. Being filled with liquid oxygen or liquid nitrogen at a supply site

b. Transporting the liquid oxygen or liquid nitrogen by road or highway to the using location, and

c. At the using location, transferring the liquid into receiving containers, or

d. At the using location, storing the liquid with low evaporation loss rates until needed, and at that time accomplishing the transfer.

Provided by IHS
No reproduction or networking permitted without license from IHS
Licensee=NASA Technical Standards 4/9972545004, User=Norman, Raymond
Not for Resale, 01/15/2013 06:47:30 MST
BEST COPY AVAILABLE

3.6.1 Configuration.- The semitrailer design configuration shall be that of a frameless, tandem-axled semitrailer tank conforming to all ICC regulations applicable to vehicles of this type.

3.6.2 Reliability.- The semitrailer shall be designed and constructed as specified herein and to successfully complete the tests of 4.4 with no failures preventing satisfactory performance and with no cause for rejection, as specified in the appropriate test paragraphs, that would indicate early failures or a high failure rate.

3.6.3 Maintainability

3.6.3.1 The semitrailer shall be designed and constructed as specified herein and to provide the following:

a. Minimum number of parts consistent with reliability and performance

b. Minimum amount of training and time necessary for assembly, disassembly, location of trouble sources, and maintenance including servicing. Where practical, parts and components shall be located or positioned for rapid and simple inspection and recognition of excessive wear and potential failure.

c. Permit adjustments, servicing, replacement of parts and components (items). Items shall be located for ample and rapid access unless performance or reliability will be appreciably degraded by the accessible location. Where engineering reasoning or data determines that physical interference between two or more items or poor accessibility to at least one item cannot be avoided, the item predicted to require the most maintenance shall be located for the best accessibility.

3.6.3.2 Maintainability.- Components and accessories shall be constructed and installed on the semitrailer to:

a. Insure that normal adjustments, repairs, and overhaul can be readily accomplished by operating personnel in the field

b. Provide ready accessibility to all parts for operation, maintenance, and repairs in the field

c. Provide for the use of conventional, general-purpose-type tools to the maximum practicable extent

d. Permit replacement and adjustment of components and accessories with minimum disturbance to other elements of the equipment.

Provided by IHS
No reproduction or networking permitted without license from IHS
Licensee=NASA Technical Standards 4/9972545004, User=Norman, Raymond
Not for Resale, 01/15/2013 06:47:30 MST
BEST COPY AVAILABLE

3.6.3.2.1 To the maximum practicable extent, ease-of-maintenance provisions shall incorporate features insuring operating clearance for facilitating maintenance and servicing at low ambient temperatures by personnel wearing heavy gloves or mittens and handicapped by bulky clothing and footgear. Where possible, intricate locking devices, controls, and threaded fastenings that can be easily overtorqued by operators lacking feel through gloves or numbness shall be avoided.

3.6.3.2.2 Covers and plates.- Covers and plates that must be removed for component adjustments or for component or part removal shall be equipped with substantial quick-disconnect fastenings.

3.6.4 Transportability

3.6.4.1 Truck-tractor compatibility.- The semitrailer shall be designed for operation with an M-52 truck tractor conforming to MIL-T-740; with a commercial-type truck tractor conforming to MIL-T-45341; or with other truck tractors equipped with a military-type lower fifth wheel conforming to Drawing C7367608, having a clear space of 54 inches forward of the kingpin centerline, and requiring a swingclear distance behind the kingpin centerline of up to and including 75 inches.

3.6.4.2 Transport acceleration forces.- The semitrailer shall be designed for compliance with the flight and taxiing acceleration requirements specified in MIL-A-8421 when filled with any quantity of liquid oxygen or liquid nitrogen up to and including full design capacity.

3.6.5 Supplies.- The semitrailer shall be designed to perform as specified herein when serviced with military lubricants. It shall not require operating supplies other than the liquid being handled and lubricants.

3.6.5.1 The semitrailer shall be designed to insure the minimum practicable loss of oxygen and nitrogen for purging, cooldown, subcooling, et cetera.

3.6.6 Cold-weather operation.- The semitrailer shall be designed for full operational use in any ambient temperature between -65° and +125° F without special provisions for winterization.

Provided by IHS
No reproduction or networking permitted without license from IHS
Licensee=NASA Technical Standards 4/9972545004, User=Norman, Raymond
Not for Resale, 01/15/2013 06:47:30 MST
BEST COPY AVAILABLE

PAGE NUMBER 9 OF THIS DOCUMENT WAS MISSING UPON RECEIPT. THE DOCUMENT HAS BEEN REORDERED AND WILL BE FILMED WHEN RECEIVED.

INFORMATION HANDLING SERVICES
AN INDIAN HEAD COMPANY

Provided by IHS
No reproduction or networking permitted without license from IHS
Licensee=NASA Technical Standards 4/9972545004, User=Norman, Raymond
Not for Resale, 01/15/2013 06:47:30 MST

3.7.3 Component location.- Semitrailer components shall be located to distribute their weights as evenly as practicable over the chassis and to require the minimum practicable lengths of lines and tubing between components.

3.7.4 Component mounting.- Semitrailer components that need not be removed or repositioned for use shall be securely mounted to the liquid storage tank assembly or other major components in a manner that will insure against damage or unnecessary movement during operation and transport. All subbases and other fixtures needed for safe and secure component mounting shall be provided and installed.

3.7.4.1 Center-of-gravity.- The semitrailer overall center-of-gravity shall be as low as practicable. Components shall be so mounted and positioned that the resulting force, as calculated from the overall center of gravity, will be to the rear of the fifth-wheel kingpin when the liquid storage tank is empty or filled to any level, and the semitrailer is decelerated at a rate of 18 ft/sec^2. Compliance with this requirement shall be demonstrated by supporting engineering data in the report specified in 4.4.2.

3.7.4.2 Tubing, lines, and electrical wiring.- Tubing, lines, and electrical wiring shall be located in protected positions, securely fastened to frame or body structures, and protected against cutting or abrasion at each point where they pass through members. Electrical wiring in open locations shall be enclosed in conduit.

3.7.5 Ramp approach and departure clearance.- When towed by an M-52 truck tractor conforming to MIL-T-740 or an equivalent commercial truck tractor, the fully loaded semitrailer shall be capable of entering, negotiating, and leaving a ramp having a slope of 10° with a clearance of not less than 2 inches between the semitrailer and the ground or ramp, and without interference between the semitrailer and truck tractor.

3.7.6 Ground clearance.- The semitrailer shall be capable of operation over 14-inch obstructions such as rocks and stumps without damage.

3.7.7 Pressure vessels.- Unless otherwise specified herein, all pressure vessels and connections thereto shall be fabricated in accordance with and comply with the requirements of section VIII of the ASME Boiler and Pressure Vessel Code.

Provided by IHS
No reproduction or networking permitted without license from IHS
Licensee=NASA Technical Standards 4/9972545004, User=Norman, Raymond
Not for Resale, 01/15/2013 06:47:30 MST
BEST COPY AVAILABLE

3.7.8 Controls, instruments, and accessories.- All automatic and manual controls, instruments, fittings, safety devices, and accessories needed for safe and efficient operation of the semitrailer shall be provided.

3.7.8.1 Instruments.- All instruments necessary for indicating the information needed in controlling the semitrailer and determining its performance shall be securely mounted on the control panel in positions readily visible and accessible to operating and maintenance personnel standing on the ground in front of the control panel.

3.7.8.2 Controls.- Insofar as practicable, all manually operated controls used in normal operation of the semitrailer shall be located on the control panel. Insofar as possible, the manual controls needed for normal operation of the semitrailer shall be limited to start, stop, and rate-adjustment mechanisms.

3.7.8.3 Installation.- The electrical switches and plug-in receptacle pressure gages, and other instruments shall be installed where they will not be contacted by liquid oxygen or nitrogen leaking from lines or connections, and where water cannot drip on them as a result of vapor condensing on cold lines.

3.7.9 Control panel.- The control panel shall be of sufficient size for installation of the instruments and controls needed in normal operation of the semitrailer. It shall be so installed on the semitrailer that all instruments, controls, et cetera, mounted thereon will be readily visible and accessible to an operator standing on the ground in front of the control panel.

3.7.9.1 Protection.- The control panel shall be protected by a panel or door when the semitrailer is not in use for liquid transfer. The control panel shall be so mounted or recessed into the control housing assembly that it will be shielded from rain and snow when the door or panel is open.

3.7.10 Parts fabrication.- Sheet-metal parts shall be of such thickness, rigidity, and strength as to withstand dents, warping, vibration, radiated heat, et cetera, encountered in service and maintenance and under the conditions specified herein.

Provided by IHS
No reproduction or networking permitted without license from IHS
Licensee=NASA Technical Standards 4/9972545004, User=Norman, Raymond
Not for Resale, 01/15/2013 06:47:30 MST

3.7.11 Locking devices.- Where practicable, all screws, pins, bolts, et cetera, shall be equipped with locking devices. Safety wire, self-locking nuts, cotter pins, lockwashers, et cetera, will be acceptable. Where practicable, lockwashers shall be secured to bolts or screws. Cotter pins shall be of a type fabricated from corrosion-resistant steel or other corrosion-resistant material.

3.7.12 Thread compound.- Pipe thread compound conforming to MIL-T-5542; thin, nonadhesive-backed, polytetrafluoroethylene tape; or other pipe thread sealing materials specifically approved by the procuring activity shall be applied to threads prior to assembly of all pipe-threaded fittings subject to contact by oxygen of 30 percent or greater purity.

3.7.13 Cleaning solvent drains.- Provisions shall be included to insure that cleaning solvents and flushing liquids can be readily and thoroughly removed from the liquid storage tank assembly, from the pressure buildup system, and from the associated semitrailer piping and components following cleaning operations. The use of readily removable and replaceable threaded plugs or similar devices in locations where it would be impractical to provide drain valves will be acceptable.

3.7.14 Pressure relief devices.- Pressure relief devices shall be provided in any line or component that can be so isolated by closing valves, or otherwise, that dangerous pressures could develop. All pressure relief devices shall be installed at readily accessible locations. Provisions shall be incorporated to insure discharge of pressure without damage to equipment or danger to personnel. Safety valves shall be sized and selected in accordance with section VIII of the ASME Boiler and Pressure Vessel Code.

3.8 Performance

3.8.1 Storage and transport capacity.- The semitrailer shall be capable of storing and transporting under the conditions specified herein not less than 4,000 U. S. gallons in order to provide an expansion (vapor) space of not less than 5 percent of the total container volume.

Provided by IHS
No reproduction or networking permitted without license from IHS
Licensee=NASA Technical Standards 4/9972545004, User=Norman, Raymond
Not for Resale, 01/15/2013 06:47:30 MST
BEST COPY AVAILABLE

3.8.2 Heat leak evaporation loss.- The liquid storage tank assembly heat leak evaporation loss shall not exceed 575 pounds of oxygen, or equivalent, per 24-hour day when:

a. The liquid storage tank assembly inner shell is filled to not less than 50 percent of design capacity with liquid oxygen or liquid nitrogen at atmospheric pressure

b. The semitrailer is parked in a location where the ambient temperature is not less than 125° F

c. The upper surface of the semitrailer is continuously exposed to solar radiation of 100 to 120 watts per square foot for not less than 8 hours each day

d. Not less than 30 days have elapsed since evacuation of the liquid storage tank assembly annular space, and

e. The semitrailer has been subjected to all the tests specified herein.

3.8.3 Vacuum retention.- The liquid storage tank assembly annular space absolute pressure shall not rise above 100 microns Hg within 7 days (168 hours) when:

a. Prior to the 7-day test period, the liquid storage tank assembly annular space is evacuated to insure an absolute pressure of less than 100 microns Hg within 24 hours after the liquid storage tank assembly is filled with liquid oxygen or liquid nitrogen to 40 percent or more of design capacity

b. The vacuum line is sealed after evacuation to prevent further evacuation prior to completion of the 7-day test period and the final absolute pressure measurement

c. The vacuum retention testing specified in 4.6.7 is accomplished during the 7-day test period

d. The liquid storage tank assembly inner shell is pressurized to not less than 30 psi throughout the 7-day test period except for the periods of time necessary to effect the specified liquid transfer operations, and

e. The semitrailer is parked or operated under ambient temperatures (see 6.4.1) throughout the test period.

Provided by IHS 2286
No reproduction or networking permitted without license from IHS
Licensee=NASA Technical Standards 4/9972545004, User=Norman, Raymond
Not for Resale, 01/15/2013 06:47:30 MST
BEST COPY AVAILABLE

3.8.4 Tank pressurization.- The pressure buildup system specified in 3.9.2 shall operate to pressurize the inner shell vapor space for liquid transfer when the storage tank assembly contains 100 or more gallons of liquid oxygen or liquid nitrogen.

3.8.4.1 Buildup rate.- The pressure buildup system shall be capable of pressurizing the liquid storage tank inner shell vapor space to not less than 35 psi within 10 minutes after closing the vapor vent line shutoff valve and initiating buildup under ambient temperatures varying from -65° to +125° F with relative humidities up to and including 85 percent when:

a. The inner shell is filled with liquid oxygen or liquid nitrogen to 15 percent or more of design capacity

b. The inner shell has been vented to atmospheric pressure for not less than 4 hours, and

c. All components of the semitrailer other than the vapor vent line external to the liquid storage tank assembly are at approximately ambient temperature.

3.8.4.2 Liquid transfer pressure control.- The pressure buildup system shall be capable of automatically maintaining the liquid storage tank assembly inner shell vapor space pressure at the set level ±5 psi under ambient temperatures varying from -65° to +125° F with relative humidities up to and including 85 percent when the liquid storage tank is emptied from full design capacity to less than 10 percent of design capacity at a continuous rate of 250 ± 25 gpm.

3.8.4.2.1 Adjustment range.- The automatic pressure control system shall be quickly and easily adjustable to maintain any liquid storage tank assembly inner shell vapor space pressure between and including 15 to 35 psig.

3.8.5 Liquid transfer line performance.- The liquid transfer line specified in 3.9.1.7.1 shall permit filling or emptying the liquid storage tank assembly through the disconnect coupling specified in 3.9.1.7.1.3 at any rate up to and including 250 gpm when handling either liquid oxygen or liquid nitrogen.

Provided by IHS
No reproduction or networking permitted without license from IHS
Licensee=NASA Technical Standards 4/9972545004, User=Norman, Raymond
Not for Resale, 01/15/2013 06:47:30 MST

3.8.6 Vapor vent line performance.- The vapor vent line specified in 3.9.1.7.2 shall permit filling the liquid storage tank assembly with liquid oxygen or liquid nitrogen at any rate up to and including 250 gpm without the inner shell vapor phase pressure exceeding 15 psig when the tank assembly is cold. When all components are initially at 125° F, the vent line shall also permit cooling down of the liquid storage tank assembly within 15 minutes for filling at maximum rate without the liquid storage tank assembly inner shell vapor phase pressure exceeding 15 psig.

3.8.7 Liquid fill line performance.- The liquid fill line specified in 3.9.1.7.3 shall permit filling the liquid storage tank assembly at rates up to and including 20 gpm without the fill line friction loss exceeding 3 psig.

3.8.8 Operating personnel.- The semitrailer shall perform as specified herein when attended by one operator.

3.8.9 Mobility.- The semitrailer shall be capable of type III, group D mobility in accordance with MIL-M-8090 except for the cross-country requirements, and as specified herein.

3.8.9.1 Turning ability.- When coupled to a towing vehicle or dolly equipped with a military-type fifth wheel conforming to Drawing C7367608, the semitrailer shall be capable of making complete turns to the right or left, with the towing vehicle or dolly assuming angles up to and including 90° with the semitrailer longitudinal axis, without interference, damage, or evidence of undue strain on any part.

3.9 Details of components

3.9.1 Liquid storage tank assembly

3.9.1.1 Liquid storage tank assembly components.- The liquid storage tank assembly shall consist of the following:

a. An inner shell

b. An outer shell

c. An inner shell suspension system

d. Insulation

Provided by IHS
No reproduction or networking permitted without license from IHS
Licensee=NASA Technical Standards 4/9972545004, User=Norman, Raymond
Not for Resale, 01/15/2013 06:47:30 MST
BEST COPY AVAILABLE

e. Provisions for attachment of the running gear and other components

f. A manway

g. Piping and connections therefor

h. Safety devices

i. Controls

j. Instrumentation.

3.9.1.2 Fabrication.- The liquid storage tank assembly shall be fabricated to contain, and retard evaporation loss of, liquid oxygen or liquid nitrogen in accordance with 3.8.1 and 3.8.2. The liquid storage tank assembly shall be of welded construction, and shall comply with the requirements of and be certified under section VIII of the ASME Boiler and Pressure Vessel Code.

3.9.1.2.1 Configuration.- The liquid storage tank assembly may be either of straight cylindrical or of two-diameter design. The two-diameter design may be used to provide the necessary low center-of-gravity and still extend the liquid storage space over the fifth wheel. If a two-diameter design is furnished, the two diameters of each shell shall be so joined by an offset, reinforced, conical transition section that the upper surfaces of the liquid storage tank assembly inner and outer shells each form a straight line, the entire offset appearing only at the bottom, as viewed from the side.

3.9.1.2.2 Component arrangement.- The liquid storage tank assembly shall be fabricated with the inner shell suspended within the outer shell to maintain a vacuumtight annular insulation space of not less than 6 inches between corresponding points on the shells and heads.

3.9.1.2.3 Manway.- A manway with an inside diameter of not less than 19-1/2 inches shall be provided at the front or in the top of the liquid storage tank assembly to permit entry for cleaning the interior of the inner shell without breaking the annular space vacuum. The manway joints, seams, and attachment points shall be smoothed and rounded after assembly as necessary to eliminate all sharp edges, corners, points, and other obstructions to safe entry. Use of the manway as an exit for lines leading from the inner shell will not be permitted.

Provided by IHS
No reproduction or networking permitted without license from IHS
Licensee=NASA Technical Standards 4/9972545004, User=Norman, Raymond
Not for Resale, 01/15/2013 06:47:30 MST
BEST COPY AVAILABLE

3.9.1.2.3.1 Bellows.- A flexible bellows of sufficient diameter to comply with 3.9.1.2.3 and permit ready installation and removal of the inner shell cover, if used, through the outer shell access hole shall be used to seal the manway from the annular space. A shield shall be fabricated inside the manway to protect the bellows during passage or manway cover removal.

3.9.1.2.3.2 Covers.- Sturdy covers shall be provided as necessary to protect the manway against damage, liquid entry, and inner shell pressure loss during use of the semitrailer under the conditions specified herein. If the cover arrangement seals the manway at the inner shell entrance in addition to sealing the manway at the outer shell entrance, the outer shell cover shall be equipped with a bursting disc or other positive sealing pressure relief device capable of preventing a pressure buildup between the manway covers that could damage the bellows.

3.9.1.2.3.3 Insulation.- The space within the flexible bellows and between the manway covers or between the outer shell manway cover and the inner shell manway entrance covering device shall be packed or otherwise filled with a readily removable and replaceable insulation which will insure the minimum convection and conduction losses.

3.9.1.2.3.4 Lockout device.- The manway cover installation provisions shall include a readily attachable lockout device, with duplicate keys, for use whenever a man is within the liquid storage tank assembly. The attached lockout device shall prevent installation of either manway cover until unlocked by key and removed. Provisions shall be made for safe and secure storage of the lockout device.

3.9.1.2.4 Connections between shells.- Only the manway bellows, piping, and other connections necessary for inner shell support, entry for cleaning, transfer and draining of liquid, safety, and determination of liquid level shall extend between the two shells.

3.9.1.3 Inner shell.- The liquid storage tank assembly inner shell shall function to physically store the liquid oxygen or liquid nitrogen. Insofar as practicable, it shall be designed to have the minimum surface area consistent with the requirements specified herein.

Provided by IHS
No reproduction or networking permitted without license from IHS
Licensee=NASA Technical Standards 4/9972545004, User=Norman, Raymond
Not for Resale, 01/15/2013 06:47:30 MST
BEST COPY AVAILABLE

3.9.1.3.1 Attachments.- The inner shell shall be equipped with all parts, fittings, and accessories necessary to provide for support, entry for cleaning, liquid transfer, total draining, venting, safety, and determination of liquid level.

3.9.1.3.2 Inner shell material.- The liquid storage tank assembly inner shell shall be fabricated from material with sufficient strength, rigidity, and vacuum-holding properties to insure compliance with the requirements specified herein, and which is resistant to corrosion caused by contact with liquid or gaseous oxygen, liquid or gaseous nitrogen, moist air, water, or cleaning solvents such as trichlorethylene.

3.9.1.3.3 Inner shell design pressure.- The liquid storage tank assembly inner shell shall be designed and constructed for a normal working pressure of 35 psig. Inner shell strength and rigidity shall insure against distortion or damage when the liquid storage tank assembly annular space is evacuated to a high vacuum or pressurized to the outer shell safety head maximum opening pressure.

3.9.1.3.4 Sump and drain provisions.- The inner shell shall be constructed with a sump and sump drain line at the rear and a smooth bottom surface throughout an arc of not less than 6 inches on each side of the vertical centerline to insure arc of not less than 6 inches on each side of the vertical centerline to insure gravity drainage of the inner shell to the level of the sump without pressurization when the front of the semitrailer is raised to an angle of 10° with the horizontal. The sump shall be not less than 5-3/4 inches in diameter. The drain line shall have an inside diameter of not less than 1/2 inch, and shall include provisions that will insure against liquid entering the line from the inner shell during normal use and road operation of the semitrailer.

3.9.1.3.5 Baffles.- Not less than three lateral and one longitudinal baffles constructed to be effective for the prevention of liquid sloshing and surging during transportation shall be fabricated within the inner shell. The lateral baffles shall be approximately equally spaced throughout the inner shell length. Baffle installation shall be such as to insure against interfering with personnel entrance or exit through the manway.

3.9.1.3.5.1 Crawlways.- The baffles shall be provided with crawlways so arranged that an operator entering the tank through the manway will have ready access to each compartment formed by the baffles. The crawlways shall either be not less than 24 inches in diameter, or not less than 18 inches wide and not less than 24 inches high. The edges of the crawlways shall be smoothed and rounded after assembly as necessary to eliminate all sharp edges, corners, points, and other obstructions to safe passage.

Provided by IHS
No reproduction or networking permitted without license from IHS
Licensee=NASA Technical Standards 4/9972545004, User=Norman, Raymond
Not for Resale, 01/15/2013 06:47:30 MST
BEST COPY AVAILABLE

3.9.1.3.5.1.1 Longitudinal baffle.- A crawlway shall be provided at a readily accessible location in each compartment formed by the lateral baffles.

3.9.1.3.5.1.2 Lateral baffles.- Each lateral baffle shall include a crawlway at a readily accessible location on one side of the longitudinal baffle. Crawlways in adjacent lateral baffles shall be located on opposite sides of the longitudinal baffle.

3.9.1.3.5.2 Baffle clearance space.- The longitudinal baffle shall be installed to provide a clearance space of not less than 6 inches between the longitudinal baffle and the bottom of the inner shell throughout the length of the tank. The lateral baffles shall be installed with cutouts at their bottoms that will provide a clear space arc not less than 6 inches in length on each side of the vertical centerline at the bottom of the inner shell without restriction to flow, and provide a clearance of not less than 6 inches between the bottom of the inner shell and the lateral baffle at the vertical centerline.

3.9.1.4 Tank outer shell.- The liquid storage tank assembly outer shell shall provide support for the inner shell and inner shell suspension system, and shall form both the structural frame and the body for the overall semitrailer. The outer shell shall be reinforced as necessary to comply with the requirements specified herein, and shall be equipped with all fittings and attachments needed for mounting the axle and fifth wheel assemblies directly to the outer shell underframing without using a separate semitrailer frame or bed, and for attachment of the control housing assembly.

3.9.1.4.1 Material.- The liquid storage tank assembly outer shell shall be fabricated from material having sufficient strength, rigidity, and vacuum-holding properties to insure compliance with the requirements specified herein.

3.9.1.4.1.1 The liquid storage tank assembly outer shell sections through which piping connections to the inner shell pass shall be fabricated from material resistant to corrosion caused by contact with oxygen, nitrogen, moist air, salt atmosphere, or water to protect against corrosion in case the protective coating is damaged by the extreme changes in temperature that it must undergo on and adjacent to the lines carrying liquid and cold vapors. The use of corrosion-resistant, low-thermal-conductive sleeves to thermally isolate the liquid-and vapor-carrying lines from the outer shell will also be acceptable.

Provided by IHS
No reproduction or networking permitted without license from IHS
Licensee=NASA Technical Standards 4/9972545004, User=Norman, Raymond
Not for Resale, 01/15/2013 06:47:30 MST
BEST COPY AVAILABLE

3.9.1.4.2 Size.- The liquid storage tank assembly outer shell shall be of sufficient size to provide not less than the insulation space specified in 3.9.1.2.2 between the inner and outer shells.

3.9.1.4.3 Design pressure.- The liquid storage tank assembly outer shell shall be designed and constructed for a working pressure that will insure sufficient strength and rigidity to prevent distortion or damage when the liquid storage tank assembly annular space is evacuated to a high vacuum or pressurized to the outer shell safety head maximum opening pressure.

3.9.1.4.4 Vacuum line.- The liquid storage tank assembly outer shell shall be provided with a vacuum line and fittings designed for effective evacuation of the annular space. The vacuum line shall incorporate a filter, a shutoff valve, and a vacuum line disconnect fitting. The vacuum line shall be installed to exhaust gases from the highest point of the liquid storage tank assembly annular space, adjacent to the outer shell and shall, in order to facilitate pumping down, incorporate features that will aid the flow of gases through the insulation to the vacuum line. Insofar as practicable, vacuum line connections shall be of the flanged and bolted type.

3.9.1.4.4.1 Vacuum line shutoff valve.- The vacuum line shutoff valve shall be of a type suited to high vacuum service, and that can be readily opened or closed with one hand. The valve shall seal the vacuum line as necessary for compliance with 3.8.3 when closed with one hand, and shall provide the least practicable resistance to gas flow when open.

3.9.1.4.4.1.1 Mounting.- The vacuum line shutoff valve shall be solidly mounted in an accessible location where it cannot be easily mistaken for a tank control valve. It shall be so mounted to supporting members that force applied in opening or closing the valve will not damage the vacuum line piping.

3.9.1.4.4.2 Vacuum line filter.- The vacuum line filter shall be a removable unit extending into the liquid storage tank assembly annular space, and shall have an effective filtering area of not less than 1,000 square inches. The filter shall present the minimum practicable restriction to gas flow consistent with effectively preventing insulation passing from the annular space into the vacuum pump line, and shall not be damaged by the backflow resulting from opening the vacuum shutoff valve to atmospheric pressure.

Provided by IHS
No reproduction or networking permitted without license from IHS
Licensee=NASA Technical Standards 4/9972545004, User=Norman, Raymond
Not for Resale, 01/15/2013 06:47:30 MST
BEST COPY AVAILABLE

3.9.1.4.4.3 Vacuum line disconnect fitting.- The vacuum line shall terminate in a flanged, female disconnect fitting with an O-ring gasket and a cover as shown on figures 1 and 2.

3.9.1.4.4.3.1 Mounting.- The vacuum line disconnect fitting shall be mounted in a location readily accessible for attachment of a vacuum pump hose. The disconnect fitting shall be so mounted that forces applied to the disconnect fitting during attachment or removal of the vacuum pump hose or while the vacuum pump hose is attached will not damage the vacuum line.

3.9.1.5 Inner shell suspension system.- The liquid storage tank assembly inner shell shall be supported and positioned within the outer shell by a suspension system that will thermally isolate the inner shell from the outer shell and provide an annular insulation space as specified in 3.9.1.2.2.

3.9.1.5.1 Strength.- The inner shell suspension system shall be of sufficient strength and rigidity to solidly support and prevent damage to or unnecessary movement of the inner shell when it is filled with liquid oxygen or liquid nitrogen to any level and the semitrailer is towed, backed, braked, or turned as specified herein and in MIL-M-8090 or subjected to the acceleration forces specified in 3.6.4.2.

3.9.1.5.2 Heat transfer resistance.- The inner shell suspension system shall be fabricated from material possessing the maximum practical resistance to heat flow, and shall provide the minimum practicable heat transfer area between the liquid storage tank assembly inner and outer shells, without sacrifice of necessary strength and rigidity.

3.9.1.6 Insulation.- The liquid storage tank assembly annular insulation space shall be filled with an insulation that will, together with evacuation of the annular space, insure compliance with 3.8.2. The insulating material shall be of a composition that will not spark or burn when touched with a glowing platinum wire in an atmosphere of pure oxygen. The insulation shall be packed during filling to a density that will insure against settling in service.

3.9.1.7 Intertank piping connections.- Piping connections between the liquid storage tank assembly inner and outer shells shall be held to the minimum necessary for insuring safety and performance in accordance with the requirements specified herein. Connecting

Provided by IHS
No reproduction or networking permitted without license from IHS
Licensee=NASA Technical Standards 4/9972545004, User=Norman, Raymond
Not for Resale, 01/15/2013 06:47:30 MST
LABLE

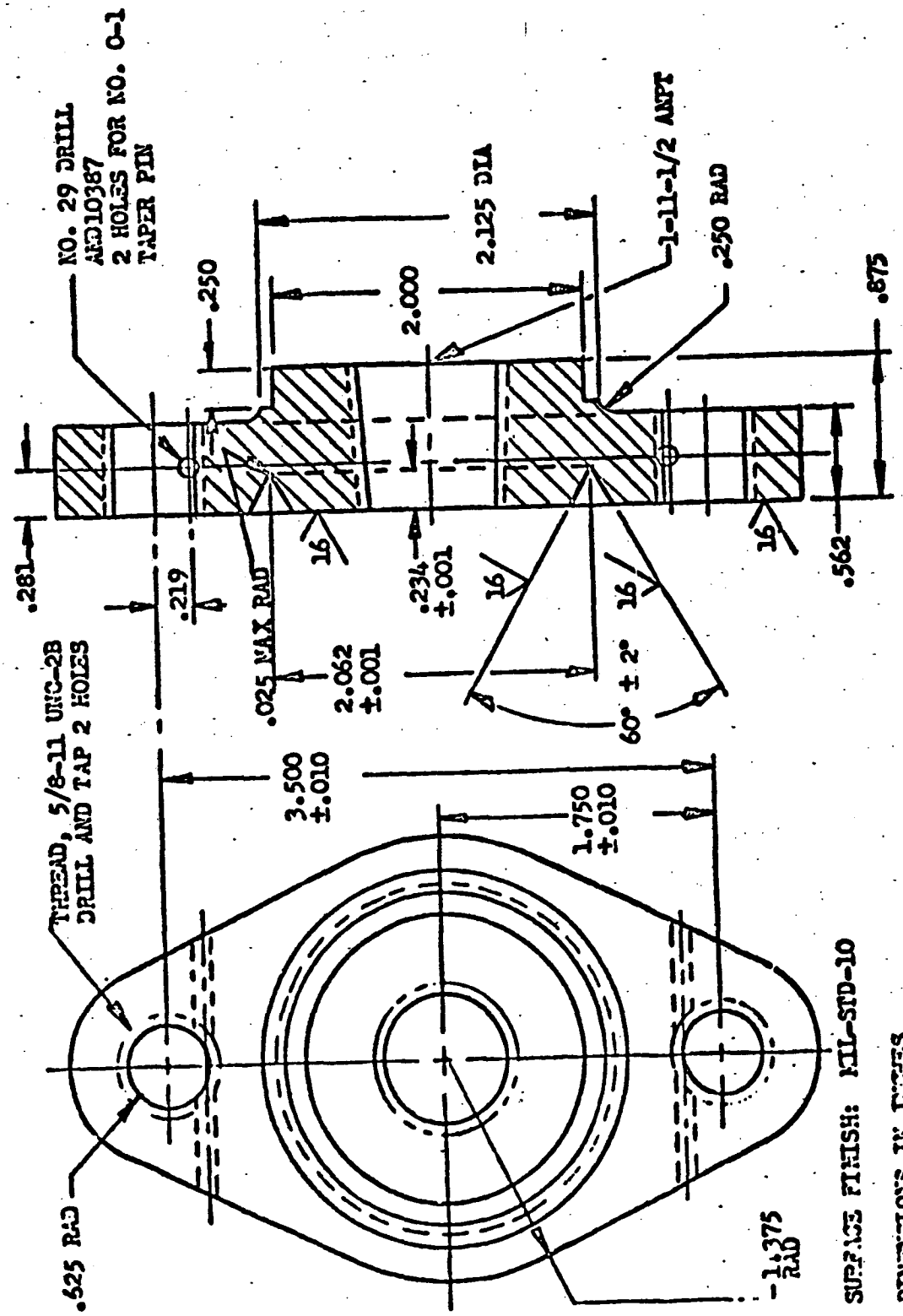

FIGURE 1. FLANGED FEMALE FITTING

Provided by IHS
No reproduction or networking permitted without license from IHS
Licensee=NASA Technical Standards 4/9972545004, User=Norman, Raymond
Not for Resale, 01/15/2013 06:47:30 MST
BEST COPY AVAILABLE

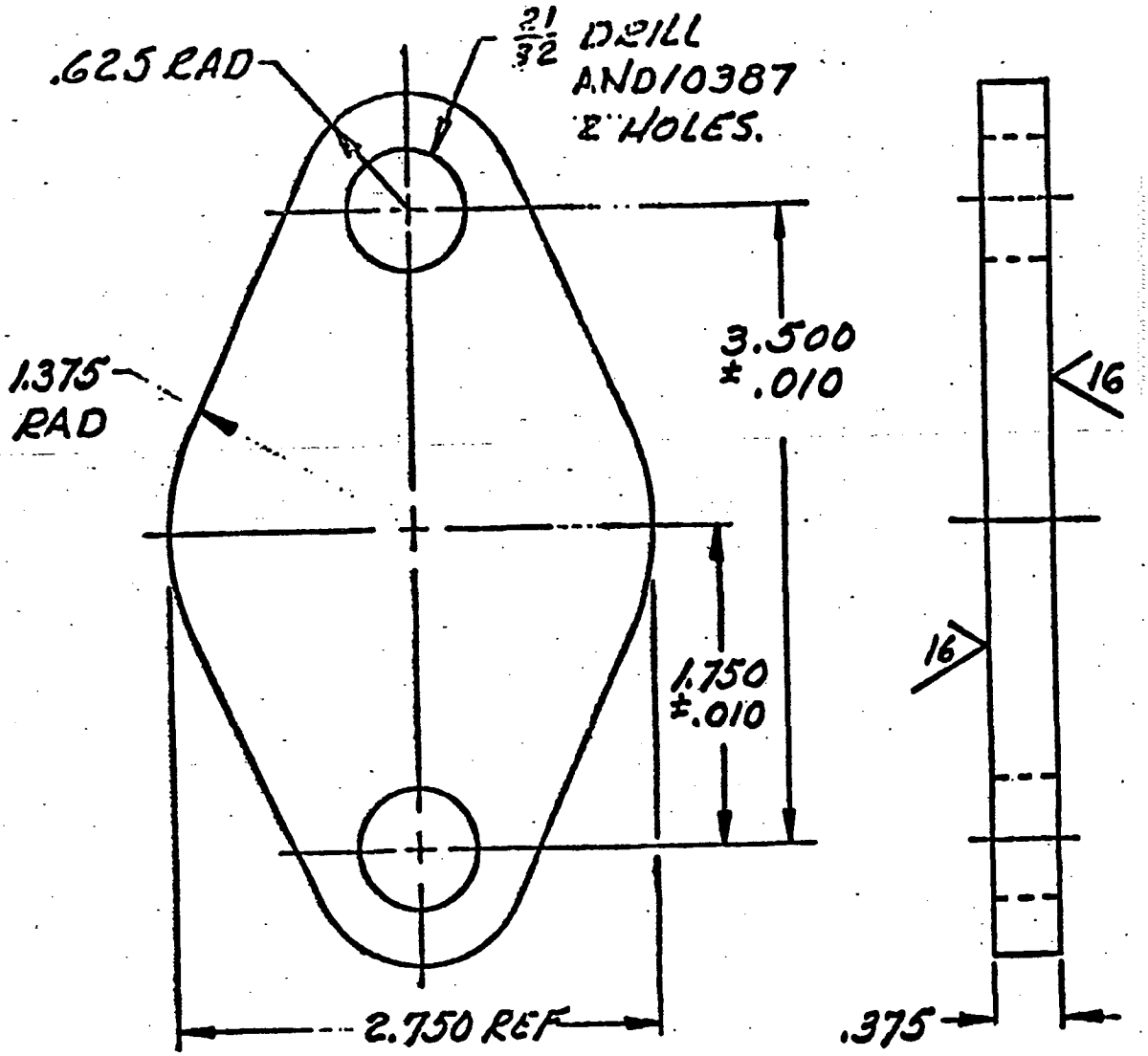

REMOVE ALL BURRS AND SHARP EDGES.
SURFACE ROUGHNESS, MIL-STD-10.
DIMENSIONS IN INCHES.
UNLESS OTHERWISE SPECIFIED,
TOLERANCES: DECIMALS ±0.031

FIGURE 2. COVER

Provided by IHS
No reproduction or networking permitted without license from IHS
Licensee=NASA Technical Standards 4/9972545004, User=Norman, Raymond
Not for Resale, 01/15/2013 06:47:30 MST
BEST COPY AVAILABLE

piping shall be resistant to corrosion caused by contact with liquid or gaseous oxygen, liquid or gaseous nitrogen, moist air, water, or cleaning solvents, such as trichlorethylene. Connecting piping shall be installed to provide the maximum practicable length of heat transfer path combined with the minimum practicable heat transfer area.

3.9.1.7.1 Liquid transfer line.- The liquid transfer line shall be of such size and installed to provide for liquid oxygen or liquid nitrogen flow or transfer into or out of the liquid storage tank assembly in accordance with 3.8.5. The liquid transfer line shall be of not less than 3 inches inside diameter.

3.9.1.7.1.1 Liquid transfer installation.- The liquid transfer line shall be installed with a standpipe or other arrangement that will withdraw liquid at a height of 2 ± 1/4 inch above the bottom of the inner shell to preclude withdrawing sediment with the liquid. In addition, the liquid transfer line installation shall be such as to:

a. Insure against the liquid oxygen or liquid nitrogen entering the line from the storage tank assembly inner shell when the liquid transfer line shutoff valve is closed

b. Insure that the inner shell can be gravity drained to the level of the standpipe through the liquid transfer line without pressurization

c. Minimize heat transfer between the inner and outer shells

d. Expose the least practicable length of line outside the storage tank assembly outer shell.

3.9.1.7.1.2 Liquid transfer line shutoff valve.- A manually operated shutoff valve having a free passage size approximately equal to that of the liquid transfer line inner diameter when fully open shall be provided in the liquid transfer line between the liquid storage tank assembly outer shell and the liquid transfer line disconnect coupling. The valve shall prevent liquid from entering the liquid transfer line from the liquid storage tank assembly inner shell when closed. General design and construction shall be as specified in 3.9.1.9 through 3.9.1.9.2.

3.9.1.7.1.2.1 Liquid transfer line shutoff valve mounting.- The liquid transfer line shutoff valve shall be solidly mounted in a location readily accessible to an operator standing on the ground outside the control and accessory housing assembly, and to require the least practicable length of line between it and the liquid storage tank

Provided by IHS
No reproduction or networking permitted without license from IHS
Licensee=NASA Technical Standards 4/9972545004, User=Norman, Raymond
Not for Resale, 01/15/2013 06:47:30 MST
BEST COPY AVAILABLE

assembly outer shell. The liquid transfer line shutoff valve shall be so mounted to supporting members that force applied in opening or closing the valve will not damage the liquid transfer line piping.

3.9.1.7.1.3 Liquid transfer line disconnect coupling.- The liquid transfer line shall terminate in a 3-1/2-inch external pipe thread. A 3-1/2-inch, male, liquid-oxygen coupling half assembly consisting of a coupling seat, gasket, and cap conforming to Drawings C8984433, B8987832, and C8984990, respectively, assembled as shown on Drawing C8987830, shall be installed on the liquid transfer line pipe thread. A 3-inch, male, liquid-nitorgen coupling half assembly consisting of a coupling seat, gasket, and cap conforming to Drawings C8987865, B8987832, and C8987896, respectively, assembled as shown on Drawing C8987888, and a fitting for adapting the 3-inch internal pipe threads of the coupling half assembly to the 3-1/2-inch external pipe threads of the liquid transfer line shall be provided for installation when the semitrailer is used with liquid nitrogen.

3.9.1.7.1.3.1 Liquid transfer line disconnect coupling mounting.- The liquid transfer line disconnect coupling shall be solidly mounted in a location readily accessible to an operator standing on the ground. The disconnect coupling shall be so mounted to supporting members that excessive force applied in attaching or removing liquid transfer hoses or while a liquid transfer hose is attached will not damage the liquid transfer line piping.

3.9.1.7.1.3.1.1 Mounting of the liquid transfer line shutoff valve and disconnect coupling to supporting members shall be accomplished with material possessing considerable resistance to heat flow to reduce to a minimum evaporation of liquid transferred.

3.9.1.7.1.3.1.2 The disconnect coupling mounting location shall provide sufficient clearance around the coupling for not less than one-half revolution of strap wrenches or other tools needed for attachment or removal of transfer hoses, or for removal and replacement of the disconnect coupling half.

3.9.1.7.2 Vapor vent line.- The vapor vent line shall be of such size and installed to provide for cooling down and filling the liquid storage tank assembly in accordance with 3.8.6. The vapor vent line shall be of not less than 3-inch inside diameter. The vapor vent line installation shall be such as to minimize heat transfer between the inner and outer shells.

Provided by IHS
No reproduction or networking permitted without license from IHS
Licensee=NASA Technical Standards 4/9972545004, User=Norman, Raymond
Not for Resale, 01/15/2013 06:47:30 MST
BEST COPY AVAILABLE

3.9.1.7.2.1 Vapor vent line shutoff valve.- A manually operated shutoff valve having a free passage size approximately equal to that of the vapor vent line inner diameter when fully open shall be provided in the vapor vent line. The valve shall provide positive shutoff when closed. General design and construction shall be as specified in 3.9.1.9 through 3.9.1.9.2.

3.9.1.7.2.1.1 Vapor vent line shutoff valve mounting.- The vapor vent line shutoff valve shall be solidly mounted with the control handle in a location readily accessible to an operator standing on the ground outside the control and accessory housing assembly, and to require the least practicable length of line between it and the liquid storage tank assembly outer shell. The liquid transfer line shutoff valve shall be so mounted to supporting members that force applied in opening or closing the valve will not damage the vapor vent line piping.

3.9.1.7.2.2 Vapor vent line discharge.- The vapor vent line shall discharge outside the control and accessory housing assembly in a location where high concentrations of oxygen or nitrogen gas and liquid overflow will not constitute a hazard.

3.9.1.7.3 Liquid fill line.- The liquid fill line shall be separate from the liquid transfer line, and shall enter the liquid storage tank assembly inner shell at the top. The liquid fill line shall be of such size and installed to provide for filling the liquid storage tank assembly in accordance with 3.8.7.

3.9.1.7.3.1 Liquid fill line installation.- The liquid fill line shall be extended along the top inside of the inner shell to discharge at the front so that cleaning fluid pumped into the inner shell through the liquid fill line will flush sediment and other contaminant materials into the sump at the rear of the inner shell for draining. In addition, the liquid fill line installation shall be such as to minimize heat transfer between the inner and outer shells, insure against interference with access to the inner shell through the manway, and expose the least practicable length of line outside the storage tank assembly outer shell.

3.9.1.7.3.1.1 Liquid fill line insulation.- All liquid fill line piping, valves, and fittings, other than the disconnect coupling outside the liquid storage tank assembly outer shell shall be insulated in a manner that will insure the minimum practicable evaporation loss of liquid oxygen or liquid nitrogen being filled into the liquid storage tank assembly at low flow rates. The insulation shall be of a type that will not absorb moisture under the temperature extremes to which it will be subjected, or shall be so applied and sealed that entrance of moisture will be prevented.

Provided by IHS 2299
No reproduction or networking permitted without license from IHS
Licensee=NASA Technical Standards 4/9972545004, User=Norman, Raymond
Not for Resale, 01/15/2013 06:47:30 MST

3.9.1.7.3.2 Liquid fill line shutoff valve.- A manually operated liquid fill line shutoff valve shall be provided in the fill line between the liquid storage tank assembly outer shell and the fill line disconnect coupling. The valve shall provide positive shutoff when closed. General design and construction shall be as specified in 3.9.1.9 through 3.9.1.9.2.

3.9.1.7.3.2.1 Liquid fill line shutoff valve mounting.- The fill line shutoff valve shall be solidly mounted in a location readily accessible to an operator standing on the ground outside the control and accessory housing assembly, and to require the least practicable length of line between it and the liquid storage tank assembly outer shell. The fill line shutoff valve shall be so mounted to supporting members that force applied in opening or closing the valve will not damage the liquid fill line piping. Mounting of the fill line shutoff valve to supporting members shall be accomplished with material possessing considerable resistance to heat flow to reduce to a minimum evaporation of liquid filled into the semitrailer through the liquid fill line.

3.9.1.7.3.3 Liquid fill line disconnect coupling.- The liquid fill line shall terminate outside the liquid storage tank assembly outer shell in a 1-inch external pipe thread. A 1-inch, male, liquid-oxygen coupling half assembly consisting of a coupling seat, gasket, and cap conforming to Drawings C8987855, B8987832, and C8987869, respectively, assembled as shown on Drawing C8987830, shall be installed on the fill line pipe thread. A 1-inch, male, liquid-nitrogen coupling half assembly consisting of a coupling seat, gasket, and cap conforming to Drawings C8987876, B8987832, and C8987890, respectively, assembled as shown on Drawing C8987888, shall be provided with the semitrailer for installation when it is used with liquid nitrogen.

3.9.1.7.3.3.1 Disconnect coupling mounting.- The disconnect coupling shall be solidly mounted as near as practicable to the fill line shutoff valve and in a location readily accessible to an operator standing on the ground outside the control and accessory housing. The disconnect coupling shall be so mounted to supporting members that force applied in attaching or detaching a liquid transfer hose or while the hose is connected will not damage the liquid fill line piping.

3.9.1.7.3.3.1.1 The mounting of the fill line shutoff valve and the disconnect coupling to supporting members shall be accomplished with material possessing considerable resistance to heat flow to reduce to a minimum evaporation of liquid filled into the semitrailer through the liquid fill line.

Provided by IHS 2300
No reproduction or networking permitted without license from IHS
Licensee=NASA Technical Standards 4/9972545004, User=Norman, Raymond
Not for Resale, 01/15/2013 06:47:30 MST
BEST COPY AVAILABLE

3.9.1.7.3.3.1.2 The discharge disconnect coupling mounting location shall provide sufficient clearance around the coupling for not less than one half revolution of strap wrenches or other tools needed for attachment or removal of a transfer hose, or for removal and replacement of the discharge disconnect coupling.

3.9.1.7.3.3.2 Adapters.- One adapter shall be provided for attachment of a liquid servicing line equipped with a disconnect assembly consisting of a male connector and a coupling nut conforming to Drawings 49A3820 and 49A3819 respectively to the liquid-oxygen coupling half. One adapter shall be provided for attachment of a like servicing line to the liquid-nitrogen coupling half.

3.9.1.7.3.3.2.1 The adapter for attachment to the liquid-oxygen coupling half assembly shall consist of a 1-inch, female, liquid-oxygen coupling half assembly made up from a coupling cone, coupling nut, retaining ring, and plug conforming to Drawings C8987856, C8987857, B8987839, and C8987870 respectively, assembled as shown on Drawing C8987831, and disconnect assembly made up from a female, liquid-oxygen tank connector and a dust cap conforming to Drawings 49A3818 and 52A3750 respectively.

3.9.1.7.3.3.2.2 The adapter for attachment to the liquid-nitrogen coupling half assembly shall consist of a 1-inch, female, liquid-nitrogen coupling half assembly made up from a coupling cone, coupling nut, retaining ring, and plug conforming to Drawings C8987877, C8987878, B8987839, and C8987891 respectively, assembled as shown on Drawing C8987889, and disconnect assembly made up from a female, liquid-oxygen tank connector and a dust cap conforming to Drawings 49A3818 and 52A3750 respectively.

3.9.1.3.3.2.3 The coupling assemblies specified in 3.9.1.7.3.3.2.1 and 3.9.1.7.3.3.2.2 shall be joined by securely screwing the external pipe threads of the female liquid-oxygen connector into the internal threads of the coupling cone.

3.9.1.7.1 Liquid level gage sensing lines.- If a differential-pressure-type liquid level gage is furnished, separate liquid level gage sensing lines shall be provided and shall be of the minimum size consistent with dependable operation of the gage. Obtaining liquid level pressure differentials through connections to the liquid supply line or the vapor vent line will not be acceptable.

3.9.1.7.5 Fill level trycock lines.- Three fill level trycock lines shall be provided for indicating when the liquid storage tank assembly is filled to 3,500 gallons, 3,900 gallons, and 4,000 gallons. Each fill level trycock line shall be of the minimum size consistent with dependable liquid level indications.

Provided by IHS
No reproduction or networking permitted without license from IHS
Licensee=NASA Technical Standards 4/9972545004, User=Norman, Raymond
Not for Resale, 01/15/2013 06:47:30 MST
BEST COPY AVAILABLE

3.9.1.7.5.1 Fill level shutoff valves.- Manually operated fill level trycock line shutoff valves shall be provided in the trycock lines as close as practicable to where the line passes through the outer shell. The general design and construction of the trycock line shutoff valves shall be as specified in 3.9.1.9 through 3.9.1.9.2.

3.9.1.7.5.1.1 The fill level trycock line shutoff valves shall be solidly mounted in locations readily visible and accessible to an operator standing on the ground in front of the semitrailer control panel. The valves shall be so mounted that force applied in opening or closing will not damage the trycock line piping.

3.9.7.5.2 Discharge point.- The trycock lines shall terminate in a location where discharge therefrom will be readily visible to an operator standing on the ground at or near the control panel.

3.9.1.8 Safety devices.- Pressure relief devices shall be provided as necessary for protection of the liquid storage tank assembly, the pressure buildup system, the semitrailer piping, and associated components. All pressure relief devices shall be installed in readily accessible locations, and shall be so positioned that discharge therefrom will not endanger operating or maintenance personnel.

3.9.1.8.1 Inner shell safety head.- A bursting-disc-type safety head shall be provided on the liquid storage tank assembly to relieve the inner shell vapor phase pressure to the atmosphere without degrading the annular space vacuum in case this pressure becomes excessive and the pressure relief valve does not open.

3.9.1.8.1.1 Inner shell safety head installation.- The inner shell safety head shall be installed with a sufficient length of tubing between itself and the vapor vent line to prevent frosting of the safety head unless the safety head actually ruptures to relieve the inner shell pressure.

3.9.1.8.2 Outer shell safety head.- A bursting-disc-type safety head or a flat-plate-type safety disc assembly in which the plate bears on an O-ring shall be provided on the liquid storage tank assembly outer shell for venting the annular space to the atmosphere in case the annular space pressure becomes excessive. If a bursting-disc-type safety head is provided, it shall be equipped with a vacuum support to prevent inward distortion when the annular space is evacuated. The flat-plate-type safety disc assembly may be used only if the plate will be retained against the O-ring with sufficient pressure to provide a positive seal against the entrance of gases or moisture under all conditions of operation, even when no vacuum exists in the annular space.

Provided by IHS
No reproduction or networking permitted without license from IHS
Licensee=NASA Technical Standards 4/9972545004, User=Norman, Raymond
Not for Resale, 01/15/2013 06:47:30 MST
COPY AVAILABLE

3.9.1.8.3 Inner shell vapor space pressure relief valve.- An automatic pressure relief valve shall be connected into the liquid storage tank assembly vapor vent line between the tank assembly outer shell and the vent line shutoff valve to relieve excess pressure. The relief valve shall be designed to open at a pressure sufficiently below the bursting-disc-type safety head breaking pressure to insure against rupturing of the bursting head unless the relief valve fails. The relief valve shall be of not less than 3/4-inch pipe size.

3.9.1.8.3.1 Inner shell vapor space pressure relief valve installation.- The inner shell vapor space pressure relief valve shall be installed with a sufficient length of tubing between itself and the vapor vent line to prevent frosting of the relief valve unless the relief valve actually opens to relieve the inner shell vapor phase pressure.

3.9.1.8.4 Liquid transfer line pressure relief and drain valves

3.9.1.8.4.1 Pressure relief valve.- An automatic pressure relief valve shall be provided in the liquid transfer line between the liquid transfer line shutoff valve and the discharge disconnect coupling for venting excess pressure from the liquid transfer line and the liquid transfer hose. The relief valve shall open at a pressure in excess of that at which the inner shell vapor space pressure relief valve opens, and that will insure against damage to the liquid transfer line, the discharge disconnect coupling, or the liquid transfer hoses.

3.9.1.8.4.1.1 Installation.- The liquid transfer line automatic pressure relief valve shall be installed with a sufficient length of tubing between itself and the liquid transfer line to prevent frosting of the relief valve unless the relief valve actually opens to relieve the liquid transfer line pressure.

3.9.1.8.4.2 Drain valve.- A manually operated valve for draining liquid from the discharge disconnect coupling when removing the liquid transfer hoses shall be provided in the liquid transfer line between the liquid transfer line shutoff valve and the discharge disconnect coupling, as near the disconnect coupling as practicable. The drain valve shall be located and installed to be readily accessible to an operator standing on the ground. The automatic pressure relief valve and the drain valve may be combined into one unit.

3.9.1.8.5 Liquid fill line pressure relief and drain valves

3.9.1.8.5.1 Pressure relief valve.- An automatic pressure relief valve shall be provided in the fill line between the shutoff valve and the disconnect coupling for venting excess pressure from the fill line.

Provided by IHS
No reproduction or networking permitted without license from IHS
Licensee=NASA Technical Standards 4/9972545004, User=Norman, Raymond
Not for Resale, 01/15/2013 06:47:30 MST
BEST COPY AVAILABLE

The relief valve shall be designed to open at a pressure in excess of that at which the inner shell vapor space pressure relief valve opens, but that will insure against damage to the liquid fill line or disconnect coupling.

3.9.1.8.5.1.1 Installation.- The fill line automatic pressure relief valve shall be installed with a sufficient length of tubing between itself and the fill line to prevent frosting of the relief valve unless the relief valve actually opens to relieve the fill line pressure.

3.9.1.8.5.2 Drain valve.- A manually operated valve for draining liquid from the fill line disconnect coupling when removing the fill hose shall be provided in the fill line between the shutoff valve and the disconnect coupling, as near the disconnect coupling as practicable. The drain valve shall be located and installed to be readily accessible to an operator standing on the ground. The automatic pressure relief valve and the drain valve may be combined into one assembly.

3.9.1.8.6 Additional pressure relief valves.- Additional automatic pressure relief valves shall be installed in each circuit or component not specified and which can be so isolated by closing valves or otherwise that a dangerous pressure could build up. These relief valves shall each be designed to open at a pressure sufficiently low to insure against damage to the component or circuit affected.

3.9.1.9 Control valves.- Automatic or manually operated shutoff and control valves shall be provided wherever needed for control of the liquid storage tank assembly inner shell vapor phase pressure, vapor phase venting, liquid transfer operations, and liquid flow rates.

3.9.1.9.1 Control valve design and construction.- The control valves shall be designed and constructed to provide positive shutoff and to provide the minimum practicable resistance to flow when open. Those manually operated valves handling low-temperature liquid or gas shall be so constructed that the packing glands and control handles are separated from the valve bodies by a sufficient length of corrosion-resistant material with low heat conductivity (such as stainless steel) that the valves will function properly with normal operating procedures. Liquid level gage control valves may be of conventional construction.

3.9.1.9.1.1 Control valve material.- The control valves shall be fabricated from corrosion-resistant material not adversely affected by extended contact with oxygen, nitrogen, moist air, or water or cleaning solvents such as trichlorethylene.

Provided by IHS
No reproduction or networking permitted without license from IHS
Licensee=NASA Technical Standards 4/9972545004, User=Norman, Raymond
Not for Resale, 01/15/2013 06:47:30 MST
BEST COPY AVAILABLE

3.9.1.9.1.2 Control valve packing.- Control valve packing shall be of a material safe for use in contact with liquid or gaseous oxygen or nitrogen and that will effectively seal the valve stem without causing difficulty of operation.

3.9.1.9.2 Control valve mounting.- All control valves used during liquid transfer shall be so mounted and installed that they can be readily opened or closed, and so that their control handles will be readily available to an operator standing on the ground at the semitrailer liquid transfer control station. All valves shall be so mounted to supporting members or large size piping that excessive force applied to the control handles in opening or closing the valves will not damage the semitrailer piping.

3.9.1.10 Liquid storage tank assembly instrumentation.- All instruments necessary for effective and safe operation of the liquid storage tank assembly shall be provided. These shall include the following:

3.9.1.10.1 Liquid level gage.- A liquid level gage shall be provided to indicate the quantity of liquid oxygen or liquid nitrogen contained in the liquid storage tank assembly inner shell with an accuracy within ±2 percent of design capacity. The gage shall have a dial diameter of not less than 6 inches and shall be designed for flush mounting on the control panel.

3.9.1.10.1.1 Graduations.- The liquid level gage shall be separately graduated in gallons of liquid oxygen and in gallons of liquid nitrogen unless the graduation marking locations are identical. Numbered graduations shall be provided at 100-gallon intervals. If separate graduation markings are necessary, the liquid-oxygen graduations shall be printed on the gage face in green with a white background, and the liquid-nitrogen graduations shall be printed on the gage face in red with a white background. A gage face with black graduations on a white background will be acceptable when separate graduation markings are not necessary. The gage face shall contain all markings and other information necessary to clearly identify the color of graduations that should be used for the liquid contained in the storage tank assembly.

3.9.1.10.1.2 Liquid level gage mounting.- The liquid level gage shall be securely mounted on the semitrailer control panel in a position where it will be readily visible during liquid transfer or filling to an operator standing on the ground in front of the control panel.

Provided by IHS
No reproduction or networking permitted without license from IHS
Licensee=NASA Technical Standards 4/9972545004, User=Norman, Raymond
Not for Resale, 01/15/2013 06:47:30 MST
BEST COPY AVAILABLE

3.9.1.10.1.3 Gage control.- If a differential-pressure-type liquid level gage is furnished, it shall be provided with a manually operated, two-way, three-ported valve and a bypass line to permit isolating it from the liquid line and equalizing the gage liquid and vapor phase pressures when the gage is not in use. The valve shall operate in the on position to close off the bypass line and connect the gage liquid phase sensing connection to the tank assembly liquid phase gage line. The valve shall operate in the off position to close off the tank assembly liquid phase gage line and open the bypass across the gage sensing connections.

3.9.1.10.1.4 Pulsation snubbers.- If a differential-pressure-type liquid level gage is furnished, it shall be provided with restriction orifices in each sensing line to act as pulsation snubbers for preventing undue fluctuation of the indicating needle.

3.9.1.10.2 Vapor phase pressure gages.- A pressure gage with a dial diameter of not less than 6 inches and a pressure gage with a dial diamter of not less than 4 inches shall be provided for indicating the liquid storage tank assembly inner shell vapor pressure. The gages shall be designed for flush mounting, shall be graduated over approximately 270° of the dial face, and shall be accurate to within 1 percent of full-scale range.

3.9.1.10.2.1 Range.- The indicating range of the vapor phase pressure gages shall be approximately 1-1/2 times the normal working pressure of the liquid storage tank assembly inner shell, unless a higher range is necessary to prevent the indicator from oving off scale before reaching the relief pressure of the inner shell safety head and the vapor space pressure relief valve specified in 3.9.1.8.1 and 3.9.1.8.3.

3.9.1.10.2.2 Pressure gage mounting.- The 6-inch vapor phase pressure gage shall be securely mounted on the semitrailer control panel in a position where it will be readily visible to an operator standing on the ground in front of the control panel. The 4-inch pressure gage shall be securely mounted at the front of the semitrailer in a position readily visible to a driver through the rear window of the truck tractor cab for checking inner shell vapor pressure during road transport. Installation of the 4-inch pressure gage shall be such as to protect the gage against entry of or damage by rain, snow, et cetera.

Provided by IHS
No reproduction or networking permitted without license from IHS
Licensee=NASA Technical Standards 4/9972545004, User=Norman, Raymond
Not for Resale, 01/15/2013 06:47:30 MST

3.9.1.10.3 Vacuum indicator.- A vacuum indicator shall be provided to indicate the actual absolute pressure within the liquid storage tank assembly annular space.

3.9.1.10.3.1 Type.- If electrically operated, the vacuum indicator shall be of the intermittent-reading type. It shall be wired to consume current and indicate the absolute pressure only when the reading switch is closed. The reading switch shall be spring-loaded or otherwise constructed to require physical pressure for closing and to automatically open when the pressure is released.

3.9.1.10.3.2 Vacuum connection.- Connection to the liquid storage tank assembly annular space shall be made through a filter that will prevent insulating material from entering the gage sensing element. Provisions shall also be incorporated that will permit replacing the sensing element without degrading the vacuum in the annular space.

3.9.1.10.3.3 Vacuum indicator mounting.- The vacuum indicator dial and the reading switch shall be mounted on the semitrailer control panel where they will be readily visible and accessible to an operator standing on the ground in front of the control panel.

3.9.2 Pressure buildup system.- The pressure buildup system shall operate to pressurize the liquid storage tank assembly inner shell vapor space as specified in 3.8.4 and 3.8.4.1.

3.9.2.1 Pressure buildup system components.- The pressure buildup system shall consist of a vaporization coil and controls, together with the connections, piping, mountings, instruments, and accessories needed for proper and safe operation.

3.9.2.2 Method of operation.- The pressure buildup system shall operate by vaporizing a portion of the liquid oxygen or liquid nitrogen contained in the liquid storage tank assembly and pressurizing the inner shell vapor space with the resultant vapors. Vaporization of the liquid shall be accomplished in an atmospheric air heated coil that foams a direct external connection between the inner shell liquid and vapor phases through the pressure control system. Liquid supply for the pressure buildup system shall be withdrawn through a separate line at a height of 2 ± 1/4 inch above the bottom of the inner shell using a standpipe or other arrangement similar to that specified in 3.9.1.7.1.1.

Provided by IHS
No reproduction or networking permitted without license from IHS
Licensee=NASA Technical Standards 4/9972545004, User=Norman, Raymond
Not for Resale, 01/15/2013 06:47:30 MST

BEST COPY AVAILABLE

3.9.2.3 Vaporization coil.- The vaporization coil shall be designed and constructed to receive liquid oxygen or liquid nitrogen from the liquid storage tank assembly and vaporize it at the rate necessary for compliance with the performance requirements of 3.8.4 and 3.8.4.1 by heat exchange with ambient air, and discharge the resultant vapors into the inner shell vapor space. The vaporization coil shall include all shrouding, baffling, and ducting necessary for insuring proper airflow distribution over the heat exchange surfaces.

3.9.2.3.1 Vaporization coil materials.- The vaporization coil and its associated piping, supports, attachments, and connections shall be constructed from materials not attacked or adversely affected by contact with liquid oxygen, gaseous oxygen, liquid nitrogen, gaseous nitrogen, water, dust, mud, road oil, moist air, or cleaning solvents.

3.9.2.3.2 Vaporization coil installation.- The vaporization coil shall be installed where it will be protected from adverse environmental conditions, mechanical damage, and mud, snow, slush, et cetera, thrown up by the truck tractor and semitrailer tires.

3.9.2.4 Operating controls.- The pressure buildup system shall include all automatic and manual controls necessary for complying with 3.8.4 through 3.8.4.1.1. Normal operation of the pressure buildup system shall require no control operation other than shutoff of the liquid storage tank assembly vapor vent line and turning on the pressure buildup system. Manual controls shall be provided for accomplishing the same purpose as the automatic pressure control system should the automatic controls become inoperative.

3.9.2.4.1 Operating control mounting.- All manually actuated controls used in normal operation of the pressure buildup system shall be mounted on or adjacent to the semitrailer control panel.

3.9.3 Control and accessory housing assembly.- A sturdy housing assembly shall be fabricated onto the liquid storage tank assembly to house and provide protection for the semitrailer instrumentation, controls, pressure buildup system components installed therein, and accessories. The control and accessory housing assembly shall be designed and constructed to protect the enclosed components from mechanical damage, direct solar radiation, rain, sleet, snow, mud, sand, and other adverse weather and environmental conditions. The control and accessory housing assembly shape and construction shall be such as to minimize the retention of snow, rain, or sleet. Doors and panels that must be opened for use of the semitrailer shall be so constructed and installed that snow or ice will not lodge thereon in a manner that will prevent easy operation or access. Construction shall be such that retention of water within the control and accessory housing assembly will be effectively prevented.

Provided by IHS
No reproduction or networking permitted without license from IHS
Licensee=NASA Technical Standards 4/9972545004, User=Norman, Raymond
Not for Resale, 01/15/2013 06:47:30 MST
BEST COPY AVAILABLE

3.9.3.1 Control and accessory housing assembly material.- The control and accessory housing assembly shall be fabricated from dimensionally stable, rigid material resistant to mechanical damage, distortion, or deterioration caused by frequent wetting with water.

3.9.3.2 Control and accessory housing removal.- The control and accessory housing assembly shall be so constructed that it, or applicable sections thereof, can be readily removed from the overall semitrailer assembly for maintenance or removal of enclosed components.

3.9.3.3 Control and accessory housing size.- The control and accessory housing assembly shall be of sufficient size to provide ready access to the enclosed components for operation, servicing, maintenance, and repairs, and to provide space for the storage of semitrailer accessories and tools.

3.9.3.4 Access openings.- Doors or hinged panels shall be provided in the control and accessory housing assembly as necessary to insure easy access to all parts for operation, inspection, servicing, maintenance, and repair of the equipment.

3.9.3.4.1 Doors and panels.- Doors and panels shall be of sufficient thickness and rigidity to prevent warping, cracking, or distortion under the conditions specified herein. All doors and hinged panels shall be equipped with sturdy hinges and with latches that will hold them securely closed or open, as applicable, during transport, storage, servicing, maintenance, and repair in wind velocities up to and including 70 mph. Those doors and hinged panels whose positions may have to be regulated shall also be provided with means for securing them in any position within the necessary adjustment range when subjected to the same wind velocities.

3.9.3.4.2 Latches.- The latches and position regulating devices on all doors and hinged panels that must be opened for normal operation, servicing, and maintenance of the semitrailer shall be of the quick-release type, readily operable by personnel wearing heavy arctic mittens and without tools. Provisions shall be incorporated for locking the semitrailer control and accessory housing with common padlocks.

3.9.3.5 Ventilation provisions.- Ventilation openings or other air circulation provisions shall be provided in the control and accessory housing assembly as necessary to prevent accumulation of fog resulting from moist air being chilled during liquid transfer or tank filling. The ventilation openings shall be so located or shielded that the entrance of rain, snow, or other precipitation and of mud, slush, and dust thrown up by the vehicle wheels will be effectively prevented.

Provided by IHS
No reproduction or networking permitted without license from IHS
Licensee=NASA Technical Standards 4/9972545004, User=Norman, Raymond
Not for Resale, 01/15/2013 06:47:30 MST
BEST COPY AVAILABLE

3.9.3.6 Sealing.- All seams and joints in the control and accessory housing assembly and between the control and accessory housing assembly and the liquid storage tank assembly shall be gasketed or sealed as necessary to prevent entry of dust and water. All access openings shall be provided with gaskets or weatherstrips as necessary to seal the control and accessory housing assembly against entry of dust and water when the access openings are closed and latched.

3.9.3.7 Lighting system.- The control and accessory housing assembly shall be equipped with a lighting system powered from the towing tractor that will permit safe and effective operation of the semitrailer at night.

3.9.3.7.1 Lamps.- Lamps shall be provided in the control and accessory housing assembly as necessary for easy reading of all instruments, and as necessary to insure sufficient illumination of all controls and other components for safe operation of the semitrailer in darkness. Each lamp assembly shall be equipped with a 12-V, rough-service-type light bulb.

3.9.3.7.1.1 Switch.- The lamps shall be controlled by an explosion-proof switch installed inside the control and accessory housing assembly where it will be readily accessible to operating personnel. The switch shall automatically turn off the lights when the control panel access doors are closed.

3.9.3.7.1.2 Lamp wiring.- The lamps shall be wired into the semitrailer road-lighting system to receive power through the on-off switches.

3.9.3.7.2 Flood lamp socket.- A disconnect socket for attachment of the 12-V floodlamp specified in 3.9.5.3 shall be mounted in a convenient location just inside the semitrailer control panel main access door.

3.9.3.7.2.1 Floodlamp socket wiring.- The floodlamp socket shall be wired into the lighting system to be always on when the semitrailer road-lighting system is energized.

3.9.3.8 Storage compartments.- Compartments for safe and secure storage of the floodlamp, the uninstalled couplings and adapters, and of the other semitrailer tools and accessories shall be provided in the control and accessory housing assembly where the material contained therein will be readily accessible to an operator standing on the ground. The tool compartment shall be designed to store all tools required in normal operation and field maintenance of the semitrailer. Provisions for locking the tool compartment with a common padlock shall be incorporated.

Provided by IHS
No reproduction or networking permitted without license from IHS
Licensee=NASA Technical Standards 4/9972545004, User=Norman, Raymond
Not for Resale, 01/15/2013 06:47:30 MST

3.9.3.9 Liquid transfer hose storage tubes.- A liquid transfer hose storage and transport tube shall be provided on the semitrailer for each of the liquid transfer hoses specified in 3.9.5.1. The storage tubes shall be designed and constructed to permit ready and easy insertion and removal of the liquid transfer hoses. The forward end of each liquid transfer hose storage and transport tube shall be tightly closed with a cover that can be removed if necessary, but which is not intended to be opened for normal insertion or removal of the liquid transfer hose. The forward end cover shall be provided with a seal or gasket that will prevent entrance of dust or water when the cover is installed. The rear end of each tube shall be provided with a readily opened cover that will positively retain the liquid transfer hose in the tube and protect it from damage and contamination when closed. The rear end cover shall be equipped with a gasket or weather strip seal that will prevent entrance of dust, water, or other contamination when the cover is closed and latched. The entrance opening shall include rollers or other provisions for preventing abrasion damage to the hose during insertion and removal.

3.9.4 Running gear assembly

3.9.4.1 Chassis frame.- The liquid storage tank assembly shall form the chassis frame for the semitrailer. The fifth wheel, tandem-axled bogie assembly, and other components shall be mounted to the liquid storage tank assembly outer shell and its underframing without necessity for a separate semitrailer frame or bed.

3.9.4.2 Bumper.- A bumper shall be provided.

3.9.4.3 Pintle hook.- A pintle hook need not be furnished.

3.9.4.4 Upper fifth wheel

3.9.4.4.1 Upper fifth wheel construction.- A steel fifth wheel bearing and skid plate mounted on an aluminum backing plate with aluminum supporting structure will be an acceptable construction.

3.9.4.4.2 Upper fifth wheel height.- With the fully loaded semitrailer coupled to a towing tractor and in level position, the height from ground level to the underside of the upper fifth wheel shall be 50 ± 1 inch.

3.9.4.4.3 Pickup plate.- A pickup plate shall be provided.

Provided by IHS
No reproduction or networking permitted without license from IHS
Licensee=NASA Technical Standards 4/9972545004, User=Norman, Raymond
Not for Resale, 01/15/2013 06:47:30 MST

3.9.4.4.4 Fifth wheel location.- The upper fifth wheel shall be located to provide the clearances necessary for compliance with 3.6.3.1. The kingpin shall be installed with its centerline not less than 18 inches from the front of the semitrailer, and so that the lower fifth wheel will be completely covered by the upper fifth wheel bearing plate.

3.9.4.5 Semitrailer axle.- The semitrailer shall be equipped with a tandem-axled bogie assembly having an axle centerline spacing of more than 48 inches but less than 60 inches, and designed for a minimum of 32,000 pounds tire load reaction.

3.9.4.5.1 Axle location.- The semitrailer tandem-axled bogie assembly shall be located to provide the maximum practicable distance, but not less than 30 feet, between the upper fifth wheel kingpin centerline and the centerline of the rear axle of the bogie assembly. This location shall be such that when the liquid storage tank assembly is filled to design capacity with liquid oxygen at its atmospheric pressure boiling temperature, the semitrailer is coupled to its towing tractor, and the complete assembly is standing on level ground, the total semitrailer tire loading will not exceed 32,000 pounds and the fifth wheel load will not exceed 24,000 pounds.

3.9.4.6 Wheels, tires, and tubes.- The semitrailer shall be provided with dual wheels and tires (with tubes and flaps if tube-type tires are furnished) on each axle.

3.9.4.6.1 Wheels.- Commercial wheels will be acceptable.

3.9.4.6.2 Tires.- Tires shall be 10.00-by-20, 12-ply, or 11-by-22.5, 12-ply, pneumatic, conforming to the quality and performance requirements of MIL-T-12459 or ZZ-T-381.

3.9.4.6.3 Innertubes.- Innertubes, if used, shall conform to ZZ-I-550, shall be size 10.00 by 20, and shall be of the heavy-duty type. Valve stems on the inner wheel innertubes shall extend through the outside wheel cutouts to be readily accessible for inflating and pressure checking. Tire flaps shall be in accordance with tire and rim association handbook standards.

3.9.4.7 Parking brake control handle.- The parking brake control handle shall be installed where it will be readily accessible to, and the parking brake easily applied by the vehicle operator from the curb side or rear of the semitrailer.

Provided by IHS
No reproduction or networking permitted without license from IHS
Licensee=NASA Technical Standards 4/9972545004, User=Norman, Raymond
Not for Resale, 01/15/2013 06:47:30 MST
COPY AVAILABLE

3.9.4.8 Fenders and mudflaps.- The semitrailer shall be equipped with fenders and mudflaps as necessary to prevent water, mud, slush, stones, et cetera, from being thrown to the rear or against the semitrailer liquid storage tank assembly, the pressure buildup system components, and the control and accessory housing assembly by the semitrailer or towing tractor tires.

3.9.4.9 Undercoating.- The fenders and adjacent metal parts subject to being sprayed with mud, slush, or stones from the wheels shall be given a heavy application of high-grade vehicle undercoating material.

3.9.4.10 Lubrication fittings.- Lubrication fittings conforming to MIL-F-3541 shall be provided in accessible positions at all necessary semitrailer lubrication points. Pressure relief fittings may be provided where use of high-pressure lubricating equipment could cause damage.

3.9.4.10.1 Warning plates.- Where the use of high-pressure lubricating equipment will damage grease seals or other parts, a warning plate shall be affixed to the equipment in a conspicuous location.

3.9.4.11 Road lighting provisions.- The semitrailer shall be equipped with complete road-lighting provisions designed for operation with truck tractors using a 12-V lighting system.

3.9.4.11.1 Lamps and reflectors.- The raod lighting provisions shall include all taillamps, stoplamps, turn signals, clearance and marker lamps, wiring, and reflectors necessary to comply with current ICC and individual state requirements for same. Commercial lamps and reflectors will be acceptable if constructed from corrosion-resistant materials and equipped with seals which effectively prevent the entrance of dust, water, and vapors.

3.9.4.11.2 Coupling receptacle.- An SAE-recommended seven-prong coupling receptacle shall be installed on the front of the semitrailer at or near the center for insertion of the truck tractor intervehicular cable. Wiring shall be in accordance with current SAE handbook recommendations.

3.9.4.11.3 Road lighting system wiring.- Road lighting system wiring not enclosed in housings or similar protected locations shall be installed in metal or plastic electrical wiring conduit for protection from mechanical damage.

Provided by IHS
No reproduction or networking permitted without license from IHS
Licensee=NASA Technical Standards 4/9972545004, User=Norman, Raymond
Not for Resale, 01/15/2013 06:47:30 MST
BEST COPY AVAILABLE

3.9.5 Accessories

3.9.5.1 Liquid transfer hoses.- Two 20-foot lengths of 3-1/2-inch inside diameter liquid-oxygen transfer hose shall be furnished with the semitrailer. The hoses shall be constructed for a working pressure of not less than 50 psig, and shall be flexible enough to permit easy handling, to prevent damage from continued flexing, and to permit ready insertion into the liquid transfer hose storage tubes.

3.9.5.1.1 Hose covering.- Each liquid transfer hose shall be provided with an insulated covering on the last 18 inches of each end to reduce the danger of frostburns to operating personnel during attachment to or removal from the discharge disconnect coupling specified in 3.9.1.7.1.3 or another liquid container. The insulating covering shall be of a type that is resistant to abrasion, acids, hydrocarbon fuels, greases, alkalis, heat, and cold.

3.9.5.1.2 Connections.- Each end of each liquid transfer hose shall terminate in a 3-1/2-inch external pipe thread. A 3-1/2-inch, female, liquid-oxygen coupling half assembly consisting of a coupling cone, coupling nut, retaining ring, and plug conforming to Drawings C8984435, C8984434, B8987839, and C8984991, respectively, assembled as shown on Drawing C8987831, shall be installed on the pipe threads at each end of each liquid transfer hose. A 3-inch, female, liquid-nitrogen coupling half assembly consisting of a coupling cone, coupling nut, retaining ring, and plug conforming to Drawings C8987886, C8987887, B8987839, and C8987897, respectively, assembled as shown on Drawing C8987889, and a fitting for adapting the 3-inch internal pipe threads of the coupling half assembly to the 3-1/2-inch external pipe threads on the liquid transfer hoses, shall be provided for installation on each end of each liquid transfer hose when the semitrailer is used with liquid nitrogen.

3.9.5.2 Fire extinguishers.- Two Type D-2 fire extinguishers conforming to MIL-E-7589 shall be provided with the semitrailer. One extinguisher shall be mounted on each side of the semitrailer. The extinguishers shall be readily accessible to persons standing on the ground. The mounting location shall be such that the extinguishers will be protected from mud, water, slush, et cetera, thrown up by the wheels.

3.9.5.3 Floodlamp.- A weatherproof, quickly attachable, portable floodlamp shall be furnished with the semitrailer. The floodlamp shall be equipped with a 12-V bulb of not less than 50 cp.

Provided by IHS
No reproduction or networking permitted without license from IHS
Licensee=NASA Technical Standards 4/9972545004, User=Norman, Raymond
Not for Resale, 01/15/2013 06:47:30 MST
BEST COPY AVAILABLE

3.9.5.3.1 Floodlamp attachment device.- The floodlamp shall be provided with an attachment device with which it may be quickly and readily attached to either rear corner of the semitrailer in a convenient location where its light will not be blocked by panels or doors. The quick-attachment device shall include a ball-and-socket or similar joint that will permit the light to be directed anywhere in a 270° arc around the corner of the semitrailer to which it is attached.

3.9.5.3.2 Extension cord.- The floodlamp shall be provided with a heavy-duty, flexible extension cord to permit its free movement in the vicinity of the semitrailer rear end. One end of the cord shall be permanently attached to the lamp. The free end of the extension cord shall be equipped with a disconnect plug designed to fit the floodlamp socket specified in 3.9.3.7.2.

3.9.5.3.3 Switches.- The floodlamp shall be provided with a manually operated on-off switch built into the lamp body.

3.9.5.3.4 Storage provisions.- Facilities shall be provided within the control and accessory housing in a convenient location for protection against damage to and storage of the floodlamp.

3.9.5.4 Special operation and maintenance tools.- When specified (see 6.2), a complete set of all special tools, other than common handtools and tools normally available in motor vehicle repair shops, required for proper operation and maintenance of the semitrailer and its components shall be provided.

3.9.5.5 Tool compartment.- A compartment shall be provided for storage of all tools required in normal operation and maintenance of the semitrailer. Provisions shall be incorporated for locking the tool compartment with a common padlock.

3.9.5.6 Handbook compartment.- A compartment shall be provided inside the control and accessory housing assembly for containing the equipment operation handbook and the equipment maintenance and inspection record. The compartment size shall be not less than 9 by 11-1/2 by 2 inches.

3.9.5.7 Padlocks.- Heavy-duty padlocks conforming to FF-P-101 shall be provided for locking the semitrailer control and accessory housing assembly and the tool compartment. All padlocks shall operate with the same key. Not less than three master keys shall be provided with each semitrailer.

Provided by IHS
No reproduction or networking permitted without license from IHS
Licensee=NASA Technical Standards 4/9972545004, User=Norman, Raymond
Not for Resale, 01/15/2013 06:47:30 MST
BEST COPY AVAILABLE

3.10 Interchangeability.- All parts having the same manufacturer's part number shall be functionally and dimensionally interchangeable. The drawing number requirements of MIL-D-70327 shall govern changes in the manufacturer's part numbers.

3.11 Dimensions.- The dimensions of the semitrailer shall not exceed the following when all access openings are closed for highway transport:

a. Overall length - 35 feet

b. Overall width - 8 feet

c. Overall height - 11 feet 2 inches.

3.12 Weight.- The gross weight of the semitrailer and its accessories when filled with not less than 4,000 gallons of liquid oxygen at its atmospheric pressure boiling temperature shall not exceed 54,000 pounds.

3.13 Finishes and protective coatings

3.13.1 Surfaces contacting oxygen.- Surfaces, parts, fittings, et cetera, of the semitrailer that will be in contact with high-purity oxygen shall be thoroughly cleaned with a nonflammable solvent, such as trichlorethylene, to remove all metal shavings, oil, grease, and other foreign material. No other cleaning, priming, or painting with organic materials shall be performed on these surfaces.

3.13.2 Exposed parts and surfaces.- All exposed parts and surfaces, except parts and surfaces that contact high-purity oxygen, shall be cleaned, treated, and finished as specified in MIL-STD-808. When more than one finish process is permitted by MIL-STD-808 for a part or surface, the most applicable process shall be determined by the contractor unless otherwise specified herein.

3.13.2.1 Finish code No. FF-909 shall apply to semitrailer exterior parts and surfaces above the centerline of the liquid storage tank assembly.

3.13.2.2 Final film color designation QG shall apply to semitrailer exterior parts and surfaces below the centerline of the liquid storage tank assembly.

3.13.2.3 Final film color designation WL shall apply to internal parts and surfaces of the control and accessory housing assembly.

Provided by IHS
No reproduction or networking permitted without license from IHS
Licensee=NASA Technical Standards 4/9972545004, User=Norman, Raymond
Not for Resale, 01/15/2013 06:47:30 MST
BEST COPY AVAILABLE

3.13.2.4 Final film color designation YL shall apply to control panels, equipment items, and mounting parts installed within the control and accessory housing assembly.

3.14 Operational marking

3.14.1 Semitrailer exterior surfaces.- Each semitrailer shall be marked as follows by applying reverse silk screened reflectorized tape conforming to MIL-R-13689:

3.14.1.1 The lettering U S AIR FORCE shall be applied with 4-inch silver reflective letters on a 5-inch-wide red reflective background and the registration number furnished by the procuring activity (see 6.2) shall be applied with 3-inch silver reflective numerals and letters on a 4-inch-wide red reflective background, on two lines with approximately 3 inches between the silver-lettered lines. The marking shall be applied on each side of the semitrailer, approximately one-third of the semitrailer length from the front of the semitrailer, just above the centerline, with a third marking centered on the rear surface of the semitrailer.

3.14.1.2 The lettering NO SMOKING WITHIN 100 FEET shall be applied in two lines of copy with 4-inch silver reflective letters on a 10-inch-wide red reflective background in the locations specified by the procuring activity.

3.14.1.3 The lettering CAUTION AIRBRAKES shall be applied with 2-inch silver reflective letters on a 3-1/2-inch-wide reflective background across the lower rear of the vehicle.

3.14.1.4 The proper air pressure to be maintained in the semitrailer tires shall be painted in block letters approximately 1/2 inch high near the wheels with gloss enamel conforming to TT-E-489. The color shall be orange-yellow, No. 13538 of Standard 595.

3.14.2 Control marking.- Unless location makes such identification impractical, all valves, gages, controls, and indicators used in operation of the semitrailer shall be identified by securely attached nameplates of such composition that exposure to oil, dirt, water, light, heat, cleaning fluids, et cetera, will not fade them or cause them to become eradicated or distorted. Securely attached metal tags may be used to identify valves and other controls not normally used for operation and control of the equipment, or which are so located that the application of nameplates would not be feasible.

Provided by IHS
No reproduction or networking permitted without license from IHS
Licensee=NASA Technical Standards 4/9972545004, User=Norman, Raymond
Not for Resale, 01/15/2013 06:47:30 MST
BEST COPY AVAILABLE

3.14.3 Operating and precautionary instructions.- Brief and easily readable operating and precautionary instructions shall be permanently affixed on or near the semitrailer control panel in a readily accessible and protected location that will be within the control and accessory housing assembly when it is closed for transport or storage. The instructions shall be clear, concise, and adequate to enable operation of the semitrailer without damage to the equipment or injury to personnel. Instruction panels shall be made from sheet aluminum or sheet zinc of not less than 0.050 inch thickness, anodized or etched to produce raised markings with a black or other dark color background, and with a raised border of not less than 1/4 inch.

3.14.4 Electrical wiring diagram.- A complete electrical wiring diagram of the semitrailer lighting system shall be permanently affixed on or near the semitrailer control panel in a readily accessible and protected location that will be within the control and accessory housing when it is closed for transport or storage. The electrical wiring diagram shall be of adequate size for clear readability and shall be prepared in the same manner as the operating and precautionary instruction plate.

3.14.5 Flow diagram.- A flow diagram illustrating the semitrailer overall processes and equipment shall be permanently affixed on or near the control panel in a readily accessible and protected location that will be within the control and accessory housing assembly when it is closed for transport or storage. The flow diagram shall be of adequate size for clear readability and shall be prepared in the same manner as the operating and precautionary instruction plate.

3.14.6 Transportation data plate.- A transportation data plate as specified in MIL-M-8090 shall be provided.

3.14.7 Insulation identification plate.- An insulation identification plate containing all information necessary to completely identify the insulation material and showing the quantity in pounds of the insulation material installed in the liquid storage tank assembly annular space shall be permanently affixed in a readily accessible and protected location that will be within the control and accessory housing assembly when it is closed for transport or storage. The insulation identification plate shall be prepared in the same manner as the operation and precautionary instruction plate.

3.14.8 Lubrication points.- Each lubrication point shall be identified by a filled-in circle of approximately 2-inch diameter around the lubrication point. The circle shall be painted on the equipment with gloss enamel conforming to TT-E-489. The color shall be insignia red, color 509 of Bulletin 166.

Provided by IHS
No reproduction or networking permitted without license from IHS
Licensee=NASA Technical Standards 4/9972545004, User=Norman, Raymond
Not for Resale, 01/15/2013 06:47:30 MST
BEST COPY AVAILABLE

3.14.8.1 Lubrication warning plates.- Where the use of high-pressure lubricating equipment will cause damage to grease seals or other parts, a warning plate shall be affixed to the equipment in a conspicuous location.

3.14.9 Color marking.- The indicating scale of each instrument (pressure gage, differential pressure indicator, temperature indicator, liquid level indicator, et cetera) used for normal operation and control of the semitrailer shall be permanently and plainly marked with green and red to show the proper operating and the other-than-proper-operating or danger ranges respectively.

3.15 Identification of product.- Equipment, assemblies, and parts shall be marked for identification in accordance with MIL-STD-130.

3.15.1 Semitrailer nameplate location.- The semitrailer nameplate shall be securely attached to the outside of the control and accessory housing assembly in a readily visible location.

3.16 Workmanship.- The semitrailer, including all parts and accessories, shall be fabricated and finished in a thoroughly workmanlike manner. Particular attention shall be given to freedom from blemishes, defects, burrs, and sharp edges; accuracy of dimensions, radii of fillets; and marking of parts and assemblies; thoroughness of soldering, welding, brazing, painting, wiring, and riveting; alignment of parts and tightness of assembly screws and bolts; cleaning, et cetera.

3.16.1 Cleaning.- Components of the semitrailer shall be thoroughly cleaned to remove dirt; excess soldering, brazing, and welding flux; welding slag; loose, spattered, or excess solder; metal chips; and other foreign materials before, during, and after assembly.

4. QUALITY ASSURANCE PROVISIONS

4.1 The supplier is responsible for the performance of all inspection requirements as specified herein. Except as otherwise specified, the supplier may utilize his own or any other inspection facilities and services acceptable to the Government. Inspection records of the examination and tests shall be kept complete and available to the Government as specified in the contract or order. The Government reserves the right to perform any of the inspections set forth in the specification where such inspections are deemed necessary to assure supplies and services conform to prescribed requirements.

Provided by IHS
No reproduction or networking permitted without license from IHS
Licensee=NASA Technical Standards 4/9972545004, User=Norman, Raymond
Not for Resale, 01/15/2013 06:47:30 MST
BEST COPY AVAILABLE

4.2 Classification of tests.- The inspection and testing of the semitrailer shall be classified as follows:

a. Preproduction testing . . . . . See 4.4

b. Acceptance tests. . . . . See 4.5.

4.3 Test conditions

4.3.1 Apparatus.- Insofar as practicable, apparatus used in conjunction with the testing specified herein shall be of laboratory precision type and shall be calibrated at intervals properly spaced to insure continued laboratory accuracy.

4.3.2 Tools.- Special tools and field equipment shall be used to the maximum practicable extent during testing. Use of these tools shall be sufficient to determine their usefulness. Instances where the special tools furnished are inadequate shall be recorded in detail.

4.3.3 Instrumentation

4.3.3.1 Pressures.- Pressures in excess of 1 mm Hg absolute and pressure differentials shall be measured by means of the pressure gages and differential pressure meters furnished as part of the semitrailer. (See 6.4.2) Barometric pressure shall be measured by means of a properly calibrated mercurial or aneroid barometer.

4.3.3.1.1 Absolute pressures below 1 mm Hg shall be measured by the use of calibrated instruments designed to read total pressures (including both permanent gases and condensable vapors). A certificate of instrument calibration, to show compliance with the accuracy requirements specified under 4.3.9.5, shall be included as part of the test report.

4.3.3.1.2 Pressures in excess of atmospheric shall be recorded in pounds per square inch gage. Pressures up to and including atmospheric shall be recorded in microns or millimeters of mercury absolute, as applicable. Differential pressures shall be recorded in inches of water or inches of mercury, as applicable.

4.3.3.2 Temperatures.- Temperatures shall be measured by means of appropriately located thermometers, or by thermocouples used with calibrated potentiometers.

4.3.3.2.1 Temperatures shall be recorded in degrees Fahrenheit.

Provided by IHS
No reproduction or networking permitted without license from IHS
Licensee=NASA Technical Standards 4/9972545004, User=Norman, Raymond
Not for Resale, 01/15/2013 06:47:30 MST
BEST COPY AVAILABLE

4.3.4 Flow rates

4.3.4.1 Liquid.- Liquid-oxygen or liquid-nitrogen flow rates shall be determined by passing the liquid through a properly calibrated recording or totaling-type liquid flowmeter designed to handle the liquid being measured. The determination of liquid flow rates by weighing the liquid collecting in a container will also be acceptable.

4.3.4.1.1 Liquid flow rates shall be recorded in gallons per minute of the liquid at its atmospheric pressure boiling temperature.

4.3.4.2 Gas.- Vapor vent and similar low pressure gaseous oxygen or gaseous nitrogen flow rates shall be determined by passing the material through a properly calibrated recording- or totaling-type gas meter designed to handle the gas being measured.

4.3.4.2.1 Gaseous flow rates shall be converted to weight flow rates for the material handled.

4.3.5 Lubricants.- Lubricants for the semitrailer shall be in accordance with applicable military specifications and of the type and grade recommended by the manufacturer.

4.3.6 Inspections, servicing, and adjusting.- Inspections, servicing, and adjustments shall be performed as specified by the semitrailer operating and maintenance instruction handbook, unless such instructions are contrary to those necessary for compliance with the requirements specified herein.

4.3.7 Observations.- During the progress of all tests, such characteristics as smoothness of operation, vibration, ease of control, pressure regulation, freedom from leaks, ease of handling, and the operation of auxiliary equipment shall be observed to determine whether the semitrailer complies with all requirements specified herein.

4.3.8 Preparation for test.- The semitrailer shall be prepared for test by assembling, adjusting, and servicing as specified in the operating and maintenance instruction handbook. The servicing shall include vacuum pumping and sealing of the vacuum line.

4.3.8.1 Vacuum pumping.- A vacuum pump shall be attached to the semitrailer vacuum line disconnect fitting and the liquid storage tank assembly annular space pumped down to insure an absolute pressure of less than 100 microns Hg within 24 hours after the warm liquid storage tank assembly is filled with liquid oxygen to 40 percent or more of design capacity.

Provided by IHS
No reproduction or networking permitted without license from IHS
Licensee=NASA Technical Standards 4/9972545004, User=Norman, Raymond
Not for Resale, 01/15/2013 06:47:30 MST
AVAILABLE

4.3.8.2 Vacuum line seal.- Upon completion of the vacuum pumping, the vacuum pump shall be disconnected and the vacuum line so sealed that further vacuum pumping cannot be accomplished without breaking the seal. The vacuum line shall remain sealed throughout all testing specified herein.

4.3.9 Test data

4.3.9.1 Correction of data.- If the tests specified herein cannot be conducted under the stated conditions, the tests may, upon approval by the procuring activity, be conducted under other conditions and the performance under the specified conditions calculated from the test results obtained. The manner of calculation shall be demonstrated and actual test data proving the correctness of the calculation methods used shall be presented for review by the procuring activity.

4.3.9.2 Operational data.- Operational data shall be recorded as specified under the individual test instructions.

4.3.9.3 Psychrometric data.- Wet- and dry-bulb temperature readings shall be recorded when necessary for an individual test, and shall be taken at the intervals specified therefor.

4.3.9.4 Barometric pressure.- The barometric pressure shall be measured and recorded when specified for an individual test, and shall be obtained at the intervals specified therefor.

4.3.9.5 Tolerances

4.3.9.5.1 Data on absolute pressures measured in the range from 0 to 10 microns Hg shall be accurate to within 2 microns Hg.

4.3.9.5.2 Data on absolute pressures measured in the range from 10 to 50 microns Hg shall be accurate to within 5 microns Hg.

4.3.9.5.3 Data on absolute pressures measured in the range from 50 to 250 microns Hg shall be accurate to within 10 microns Hg.

4.3.9.5.4 Data on absolute pressures measured in the range from 250 to 500 microns Hg shall be accurate to within 20 microns Hg.

4.3.9.5.5 Data on absolute pressures measured in the range from 500 to 1,000 microns Hg (1 mm Hg) shall be accurate to within 40 microns Hg.

Provided by IHS
No reproduction or networking permitted without license from IHS
Licensee=NASA Technical Standards 4/9972545004, User=Norman, Raymond
Not for Resale, 01/15/2013 06:47:30 MST
BEST COPY AVAILABLE

4.3.9.5.6 Data on absolute pressures measured in the range from 1 mm Hg to and including atmospheric shall be accurate to within 0.1 mm Hg.

4.3.9.5.7 Data on gage pressures measured in the range from atmospheric to 10 psig shall be accurate to within 1/4 psig.

4.3.9.5.8 Data on gage pressures measured in the range from 10 to 50 psig shall be accurate to within 1/2 psig.

4.3.9.5.9 Data on gage pressures measured in excess of 50 psig shall be accurate to within 1 percent.

4.3.9.5.10 Data on weights, weight flow rates, and volume flow rates shall be accurate to within 1 percent.

4.3.9.5.11 Data on gas and vapor flow rates shall be accurate to within 1 percent.

4.3.9.5.12 Data on temperatures shall be accurate to within 2° F.

4.3.9.6 Pressure test record.- A record of the pressures at which each semitrailer component is tested and the length of time during which it is subjected to the pressure shall be retained for examination by the procuring activity.

4.3.10 Preliminary run-in.- The nature and extent of running-in shall be determined by the manufacturer, and shall be performed prior to the testing specified herein. All necessary adjustments other than normal control adjustments shall be made during this run-in and shall remain undisturbed thereafter.

4.4 Preproduction testing

4.4.1 Preproduction test sample tested by the contractor.- The contractor shall subject one semitrailer to the preproduction tests specified in 4.4.4.

4.4.2 Preproduction test report.- After the contractor completes the preproduction tests, he shall prepare a preproduction test report according to MIL-T-9107, and furnish three complete copies of the report to the procuring activity.

Provided by IHS
No reproduction or networking permitted without license from IHS
Licensee=NASA Technical Standards 4/9972545004, User=Norman, Raymond
Not for Resale, 01/15/2013 06:47:30 MST
BEST COPY AVAILABLE

4.4.2.1 Reliability and maintainability information.- The following information shall be submitted as an attachment accompanying the preproduction test report (same number and sort of copies) or shall be included as part of that report:

a. All failures, maintenance, and other events recorded shall be identified by accummulated operating time, miles, cycles, or position in the test procedure as appropriate. Test conditions during the failures or irregular operations identified shall be recorded.

b. Description of the engineering reasoning and of any tests conducted to determine assignable causes for all failures and irregular operations identified.

c. Description of the engineering reasoning behind any corrections made, to be made on production items, or proposed to be made and behind the predicted effectiveness of those corrections.

d. Test activity or contractor comments on item features or requirements that, if modified, should improve the item.

e. Test activity or contractor comments on field conditions or procedures to be avoided or cultivated to increase the item's reliability and useful life.

f. Estimates (±5 percent of actual experienced) of manhours required for each maintenance and servicing action during the tests. A brief description of the qualifications and experience of the personnel involved shall be included and shall be adequate to allow comparison to the personnel anticipated in similar field work. (See 4.6.18.)

4.4.3 Preproduction test sample for the procuring activity.- When specified (see 6.2), the contractor shall submit the preproduction sample to the procuring activity along with the preproduction test report.

4.4.4 Preproduction tests.- The preproduction tests shall consist of all tests described under 4.6.

4.5 Acceptance tests.- Acceptance tests shall consist of the individual tests.

Provided by IHS
No reproduction or networking permitted without license from IHS
Licensee=NASA Technical Standards 4/9972545004, User=Norman, Raymond
Not for Resale, 01/15/2013 06:47:30 MST
BEST COPY AVAILABLE

4.5.1 Individual tests.- Each semitrailer shall be subjected to the following tests as described under 4.6:

a. Examination of product . . . . . See 4.6.1

b. Mechanical inspection. . . . . See 4.6.2

c. Functional check . . . . . See 4.6.3

d. Pressure test. . . . . See 4.6.55

e. Vacuum retention test. . . . . See 4.6.7

f. Evaporation loss rate individual acceptance test. . . . . See 4.6.8.2

g. Pressure buildup test. . . . . See 4.6.9.

4.6 Test methods

4.6.1 Examination of product.- The overall semitrailer and its individual components shall be inspected to determine compliance with the requirements specified herein. This inspection shall include examination of the general design; arrangement of accessories and major assemblies; quality of materials and workmanship; finish and appearance of all parts; and the ease of adjustment and alignment of all parts.

4.6.2 Mechanical inspection.- A mechanical inspection of all components and parts shall be conducted. All pertinent data concerning conditions, defects of manufacture, damage in transit, and damage through use prior to test shall be recorded. This inspection shall include servicing of the semitrailer for road operation.

4.6.3 Functional check.- All mechanical operating parts shall be checked for free and proper functioning.

4.6.4 Dimensions and weight.- The overall dimensions and total weight, including all equipment and accessories, of the completely assembled, empty semitrailer shall be recorded on the test data sheets. Following this, the total weight of the semitrailer filled to design capacity with liquid oxygen at its atmospheric pressure boiling temperature shall be recorded. The dimensions and weight shall not exceed the limits specified in 3.11 and 3.12.

Provided by IHS
No reproduction or networking permitted without license from IHS
Licensee=NASA Technical Standards 4/9972545004, User=Norman, Raymond
Not for Resale, 01/15/2013 06:47:30 MST
BEST COPY AVAILABLE

4.6.5 Pressure test.- Each component and circuit of the semitrailer that operates under positive pressure in normal service shall be pressure tested in accordance with section VIII of the ASME Boiler and Pressure Vessel Code. Automatic pressure relief devices need not be installed for this test. Any distortion, damage, or leaks resulting from the pressure testing shall be cause for rejection of the components affected.

4.6.6 Liquid storage capacity and fill level trycock lines test.- The liquid storage tank assembly inner shell storage capacity and accuracy of installation of the three fill level trycock line shall be determined by first filling the tank assembly until it overflows through the 3,500-gallon fill line trycock line and measuring the volume of the filling liquid or weighing the tank before and after filling. The test shall then be repeated an additional three times with the tank assembly being filled until it overflows through the 3,900-gallon fill level trycock line, the 4,000-gallon fill level trycock line, and the vapor vent line, in turn. The actual capacity when it is filled to each of the three fill level trycock lines and the actual capacity when it is filled to overflow through the vapor vent line shall all be reported in U. S. gallons. The storage capacity data shall be accurate to within 5 gallons, and the actual liquid storage capacity shall comply with 3.8.1 and 3.9.1.7.5.

4.6.7 Vacuum retention test.- The vacuum retention test shall consist of the following individual test operations conducted in the order listed. The liquid storage tank assembly shall be continually pressurized to not less than 30 psi throughout the 7 days of testing except when necessary to depressurize for liquid transfer.

4.6.7.1 Following evacuation of the semitrailer liquid storage tank assembly annular insulation space and sealing of the vacuum line, and with all liquid storage tank assembly components at approximately ambient temperature, the inner shell shall be pressurized to not less than 30 psi with oxygen or nitrogen gas and the semitrailer towed not less than 50 miles over paved highways or similar improved roads (see 6.4.3) and not less than 25 miles over graded gravel or similar unimproved roads (see 6.4.4). Wherever practicable, the semitrailer speed shall be maintained at not less than 50 mph on the improved roads and at not less than 25 mph on the unimproved roads.

4.6.7.2 The liquid storage tank assembly shall be filled with between 500 and 750 gallons of liquid oxygen or liquid nitrogen, repressurized to not less than 30 psi by vaporizing part of the contained liquid with the pressure buildup system, and the semitrailer towed over improved and unimproved roads as specified in 4.6.7.1. During the improved road

Provided by IHS
No reproduction or networking permitted without license from IHS
Licensee=NASA Technical Standards 4/9972545004, User=Norman, Raymond
Not for Resale, 01/15/2013 06:47:30 MST
BEST COPY AVAILABLE

operation, not less than two sudden stops shall be conducted in which the semitrailer and towing tractor are brought to a complete stop from a speed of not less than 40 mph within a distance of 100 feet.

4.6.7.3 The liquid storage tank assembly shall be filled with liquid oxygen or liquid nitrogen, to not less than 60 percent of design capacity, repressurized as specified in 4.6.7.2, and the semitrailer towed over improved and unimproved roads as specified in 4.6.7.1. During the improved road operation, not less than three sudden stops shall be conducted in which the semitrailer and towing tractor are brought to a complete stop from a speed of not less than 40 mph within a distance of 100 feet.

4.6.7.4 The semitrailer shall be parked with the liquid storage tank assembly pressurized as specified above for not less than 24 hours or until not less than 7 days (168 hours) have passed since the pressurization specified in 4.6.7.1, whichever is longer.

4.6.7.5 Following completion of the testing specified in 4.6.7.1 through 4.6.7.4, the liquid storage tank assembly inner shell pressure shall be reduced to atmospheric and the annular space absolute pressure determined with an instrument of the type specified in 4.3.3.1.1. The liquid storage tank assembly annular space absolute pressure shall not exceed 100 microns or the semitrailer shall be considered to have failed the test.

4.6.8 Heat leak evaporation loss rate tests

4.6.8.1 Initial preproduction test.- The initial preproduction heat leak evaporation loss rate test shall consist of the following individual test operations conducted in the order listed. Throughout the complete test, the inner shell vapor phase pressure shall remain at as near atmospheric as necessary pressure drops through the measuring apparatus will permit.

4.6.8.1.1 Following the vacuum retention test and with the liquid storage tank assembly remaining filled to not less than 50 percent of design capacity, the semitrailer shall be parked in a location where the ambient temperature will remain at not less than 125° throughout the periods specified.

4.6.8.1.2 The inner shell vapor space shall be vented to atmospheric pressure for not less than 24 hours through the flow measuring apparatus that will be used for determining the evaporation loss rate.

Provided by IHS
No reproduction or networking permitted without license from IHS
Licensee=NASA Technical Standards 4/9972545004, User=Norman, Raymond
Not for Resale, 01/15/2013 06:47:30 MST
BEST COPY AVAILABLE

4.6.8.1.3 The semitrailer shall remain parked under the specified ambient temperature and vapor phase pressure conditions for an additional 72 hours while heat leak evaporation rate losses for the liquid storage tank assembly are determined by passing all vapors vented from the inner shell through a recording- or totaling-type gas flowmeter. During this 72-hour period, the upper surface of the semitrailer shall be exposed to the full impact of solar radiation of 100 to 120 watts per square foot from three separate periods of not less than 8 hours each, with each exposure followed by a period of not less than 16 hours during which no solar radiation is applied. The wave length of the radiant energy shall be as specified under sunshine tests in MIL-E-4970, except that the requirement for radiation in wave lengths below 3,800 angstrom units may be deleted. The total weight of vapors vented during the test and the weight of vapors vented since the preceding reading shall be recorded at 8-hour intervals throughout the 72-hour test period. Loss rates shall be calculated for each reading and for the average loss over the entire 72-hour test period. The evaporation losses shall be recorded as the percentage of design capacity of oxygen vaporized per 24-hour day, and shall not exceed that specified in 3.8.2, or the semitrailer shall be considered to have failed the test.

4.6.8.1.4 The semitrailer shall be removed from the high temperature test conditions and parked under ambient temperature conditions for not less than 36 hours to permit temperature stabilization.

4.6.8.1.5 The semitrailer shall be subjected to the individual acceptance evaporation loss rate test specified in 4.6.8.2 to establish comparative data for determining whether production semitrailers are capable of complying with the requirements of 3.8.2.

4.6.8.2 Evaporation loss rate individual acceptance test.- Following the vacuum retention test and with the semitrailer liquid storage tank assembly remaining filled to not less than 50 percent of design capacity, the semitrailer shall be parked where it will be subjected to ambient temperatures throughout the test. The inner shell vapor space shall be vented to atmospheric pressure for not less than 24 hours through the flow measuring apparatus that will be used for determining the evaporation loss rate. The heat leak evaporation loss rate for the liquid storage tank assembly shall then be determined by passing all vapors vented from the inner shell through a recording- or totaling-type gas flowmeter for an additional period of not less than 72 hours. Throughout the test, the inner shell vapor phase pressure shall remain at as near atmospheric as necessary drops through the flow measuring apparatus will permit.

Provided by IHS
No reproduction or networking permitted without license from IHS
Licensee=NASA Technical Standards 4/9972545004, User=Norman, Raymond
Not for Resale, 01/15/2013 06:47:30 MST
BEST COPY AVAILABLE

4.6.8.2.1 The total weight of vapors vented during the test and the weight of vapors vented since the preceding reading shall be recorded at 8-hour intervals throughout the 72-hour test period. Loss rates shall be calculated for each reading and for the average loss over the entire 72-hour test period. The evaporation loss shall be recorded as the percentage of design capacity vaporized per 24-hour day and shall not exceed the limit established by the comparative data obtained in 4.6.8.1 for compliance with 3.8.2 or the semitrailer shall be considered to have failed the test.

4.6.9 Pressure buildup tests

4.6.9.1 Buildup with low liquid level.- The semitrailer liquid storage tank assembly shall be filled with enough liquid oxygen or liquid nitrogen to insure between 125 and 150 gallons remaining in the inner shell after the specified stabilization. The semitrailer shall then set with the inner shell vapor space vented to atmospheric pressure for not less than 4 hours or until all components other than the vapor vent line external to the liquid storage tank assembly reach approximately ambient temperature, whichever is longer. Following this stabilization period, the inner shell vapor vent line shall be closed and the pressure buildup system actuated. The inner shell vapor phase pressure shall automatically build to 35 psi or the semitrailer shall be considered to have failed the test.

4.6.9.2 Pressure buildup test.- The semitrailer liquid storage tank assembly shall be filled with liquid oxygen or liquid nitrogen to between 15 and 20 percent of design capacity, and the semitrailer placed in a location where it will be subjected to relative humidity of not less than 85 percent in an ambient temperature above 35° F throughout the test operations. The semitrailer shall set with the inner shell vapor space vented to atmospheric pressure for not less than 4 hours or until all components other than the vapor vent line external to the liquid storage tank assembly reach approximately ambient temperature, whichever is longer. The inner shell vapor vent line shall then be closed and the pressure buildup system actuated. The inner shell vapor phase pressure 30 seconds after closing of the vent valve and initiating buildup; the inner shell vapor phase pressure at the end of each 30-second period thereafter until the pressure reaches 35 psi; the total length of time from closing of the vent valve and initiating buildup until the vapor phase pressure has reached 35 psi; the ambient temperature(s); and the relative humidity (ies) shall be recorded on the test data sheets. The length of time required after closing of the vent valve and initiating buildup until the inner shell vapor phase pressure has reached 35 psi shall not exceed 10 minutes or the semitrailer shall be considered to have failed the test. Design considerations and calculations or test

Provided by IHS
No reproduction or networking permitted without license from IHS
Licensee=NASA Technical Standards 4/9972545004, User=Norman, Raymond
Not for Resale, 01/15/2013 06:47:30 MST
BEST COPY AVAILABLE

data demonstrating the capability of the pressure buildup system to comply with the requirements of 3.8.4 under the full temperature range specified therein shall be included as part of the test report specified in 4.4.2.

4.6.10 Liquid transfer pressure control test.- The semitrailer liquid storage tank assembly shall be filled to design capacity with liquid oxygen or liquid nitrogen and the semitrailer placed in a location where it will be subjected to relative humidity of not less than 85 percent in an ambient temperature above 35° F throughout the test operation. The semitrailer shall set with the inner shell vapor space vented to atmospheric pressure for not less than 4 hours or until all components other than the vapor vent line external to the liquid storage tank assembly reach approximately ambient temperature, whichever is longer. Upon completion of this stabilization period, the inner shell vapor vent line valve shall be closed, the inner shell vapor space pressure raised to 35 psi by means of the pressure buildup system, and the entire contents of the semitrailer discharged at 250 ± 25 gpm through the liquid transfer line with the pressure buildup system on automatic control. The length of time required to build up pressure in the liquid storage tank assembly inner shell shall be recorded, and shall not exceed 10 minutes. Throughout the test, the inner shell vapor phase pressure, the tank liquid level, and the actual delivery rate of liquid in gallons per minute shall be recorded at 1-minute intervals. The ambient temperature (s) and the relative humidity (ies) existing during the test operations shall also be recorded. The tank inner shell vapor pressure shall remain at 35 ± 5 psi at all times while the liquid storage tank assembly contains more than 10 percent of design capacity, or the semitrailer shall be considered to have failed the test. Design considerations and calculations or test data demonstrating the capability of the pressure buildup system to comply with the requirements of 3.8.4.1 under the full temperature range specified therein shall be included as part of the test report specified in 4.4.2.

4.6.11 Rapid fill test.- The semitrailer shall be parked under conditions that will insure all liquid storage tank assembly components attaining a temperature of not less than 125° F. When the liquid storage tank assembly components have stabilized at this temperature, liquid oxygen or liquid nitrogen shall be transferred into the inner shell through the liquid transfer line specified in 3.9.1.7.1 until the inner shell has been cooled sufficiently to permit filling at the 250-gpm rate specified in 3.8.6. The rate of transfer during cooldown shall be the maximum that will maintain a liquid storage tank assembly inner shell vapor pressure of less than 15 psig. The cooldown time shall not exceed 15 minutes. Following cooldown, the liquid storage tank assembly shall be filled at a rate of not less than 250 gpm. The liquid storage tank assembly inner

Provided by IHS
No reproduction or networking permitted without license from IHS
Licensee=NASA Technical Standards 4/9972545004, User=Norman, Raymond
Not for Resale, 01/15/2013 06:47:30 MST
BEST COPY AVAILABLE

shell vapor pressure shall not exceed that specified in 3.8.6 when filled at the specified rate. The pressure drop across the liquid transfer line when filling at 250 gpm shall be determined and recorded. The inner shell vapor space pressure shall be recorded at 1-minute intervals throughout the fill test.

4.6.12 Liquid fill line test.- Liquid oxygen shall be transferred into the semitrailer liquid storage tank assembly through the liquid fill line specified in 3.9.1.7.3 at not less than 20 gpm for a length of time adequate to determine the pressure drop resulting from friction losses in the liquid fill line. The liquid fill line friction loss shall not exceed that specified in 3.8.7.

4.6.13 Night operation.- The semitrailer liquid storage tank assembly shall be filled with either liquid oxygen or liquid nitrogen to design capacity, and the semitrailer parked in a convenient location for not less than 4 hours and until full darkness. After full darkness occurs, a truck tractor shall be coupled to the semitrailer and the assembly moved to a location where a liquid container of sufficient size to receive the full load is available. The semitrailer shall then be parked adjacent to the liquid container and the entire contents of the liquid storage tank assembly transferred into this container through a liquid transfer hose. Following completion of the liquid transfer operation, the semitrailer shall be disconnected from the receiving container and returned to the starting point. No lights other than those furnished with the semitrailer and truck tractor shall be used at any time during the test. All instances where the illumination furnished by the lighting equipment supplied with the semitrailer is inadequate shall be recorded in detail on the test data sheets.

4.6.14 Road operation tests

4.6.14.1 Road handling test.- The semitrailer shall be filled to design capacity with liquid oxygen or liquid nitrogen and towed not less than 50 miles over paved highways or similar improved roads and not less than 25 miles over graded gravel or similar unimproved roads. Wherever practicable, the semitrailer speed shall be maintained at 50 mph on the improved and at 25 mph on the unimproved roads. Throughout the road-handling test, the semitrailer shall be observed as to its trackability, ease of handling, tendency to yaw, tendency to sway, et cetera. Upon completion of the road-handling test, the semitrailer shall be inspected for misalignment, distortion, or other damage sustained as a result of the testing. Undesirable roadability features and any damage resulting from the test that would affect its use and operation shall be cause for rejection. A complete description of any adverse handling characteristics or damage sustained shall be recorded on the test data sheets.

Provided by IHS
No reproduction or networking permitted without license from IHS
Licensee=NASA Technical Standards 4/9972545004, User=Norman, Raymond
Not for Resale, 01/15/2013 06:47:30 MST
NOT AVAILABLE

4.6.14.2 Turning ability test.- The semitrailer shall be filled to design capacity with liquid oxygen and coupled to a 5-ton, M-52, 6-by-6, military truck tractor or an equivalent commercial truck tractor, and the assembly operated through right and left turns, both towing and backing, in which the towing vehicle assumes angles from 0 to 90° with the semitrailer tank longitudinal axis. Throughout the turning testing, the semitrailer tank shall be checked for sufficient clearance with the tractor. Upon completion of the turning testing, the semitrailer shall be inspected for misalignment, distortion, or other damage sustained as a result of the testing. Undesirable roadability features and any damage resulting from the test that would effect its use and operation shall be cause for rejection. A complete description of any interference between the semitrailer and towing tractor or damage sustained by either shall be recorded on the test data sheets.

4.16.14.3 Ramp negotiation test.- The liquid storage tank assembly shall be filled to design capacity with liquid oxygen and the semitrailer coupled to a 5-ton, M52, 6-by-6 military truck tractor or an equivalent commercial truck tractor. The assembly, truck tractor and semitrailer, shall be moved up to, over, and down a ramp inclined 10° to the horizontal. The bottom and top of the ramp shall end in horizontal landings that form a sharply defined 10° angle with the ramp. The length of the ramp, measured along the slope, shall be greater than the length of the semitrailer. No point on the semitrailer other than the wheels shall approach closer than 2 inches to either the ramp or the horizontal landings during the test, and there shall be no interference between parts of the semitrailer and the towing tractor. Upon completion of the ramp negotiation test, the semitrailer shall be inspected for damage. Undesirable roadability features, approach of parts other than the wheels to within less than 2 inches from either the ramp or the horizontal landings, interference between the semitrailer and the towing tractor, or any damage resulting from the test that would affect its use and operation, shall be cause for rejection.

4.6.14.4 Ground clearance test.- The liquid storage tank assembly shall be filled to design capacity with liquid oxygen and the semitrailer towed over a 14-inch high obstruction such as a rock or stump. The semitrailer shall be capable of passing over the obstruction without contact.

4.6.14.5 Towing force test.- The liquid storage tank assembly shall be filled to design capacity with liquid oxygen and the towing force required to move the semitrailer on level concrete pavement determined. The towing force shall not exceed 50 pounds per ton of gross weight.

Provided by IHS
No reproduction or networking permitted without license from IHS
Licensee=NASA Technical Standards 4/9972545004, User=Norman, Raymond
Not for Resale, 01/15/2013 06:47:30 MST
COPY AVAILABLE

4.6.14.6 Brake performance tests

4.6.14.6.1 Brake test with full tank.- The semitrailer shall be filled to design capacity with liquid oxygen and subjected to a minimum of 10 emergency stops in which it and the towing vehicle are brought to a complete halt as rapidly as possible without losing control from a speed of not less than 40 mph on a clean, dry, smooth, level paved surface free from loose material. The distance after application of the tractor brakes required for bringing the assembly to a complete stop shall be recorded and shall not exceed 120 feet. A time-distance recorder shall be used.

4.6.14.6.2 Brake test with partially filled tank.- The semitrailer shall be filled to between 50 to 60 percent of design capacity with oxygen and resubjected to the testing specified in 4.6.14.6.1.

4.6.14.6.3 Breakaway test.- The semitrailer shall be filled to design capacity with liquid oxygen and towed at a speed not less than 40 mph on a clean, dry, smooth, and level paved surface free from loose material. A breakaway shall be simulated by suddenly disconnecting both airbrake hoses from the tractor while the semitrailer is being towed at the specified speed. The emergency braking system performance and the distance required for the semitrailer brakes to bring the complete vehicular assembly, semitrailer and truck tractor, to a complete stop shall be recorded on the test data sheets. Performance shall be in accordance with current ICC regulations.

4.6.14.6.4 Parking brake test.- The semitrailer shall be filled to design capacity with liquid oxygen and parked on a clean, dry, smooth, and level paved surface free from loose material. The semitrailer shall then be subjected to a towing force sufficient to cause forward movement. The wheels affected by the parking brake shall skid rather than roll.

4.6.14.6.5 Inspection.- Throughout the brake performance testing, the semitrailer shall be closely observed as to its trackability, ease of handling, tendency to yaw, tendency to sway, et cetera. Upon completion of the brake performance testing, the semitrailer shall be inspected for misalignment, distortion, or other damage sustained as a result of the testing. Undesirable roadability features and any damage resulting from the test that would affect its use and operation shall be cause for rejection. A complete description of any adverse handling characteristics or damage sustained shall be recorded on the test data sheets.

Provided by IHS
No reproduction or networking permitted without license from IHS
Licensee=NASA Technical Standards 4/9972545004, User=Norman, Raymond
Not for Resale, 01/15/2013 06:47:30 MST
BEST COPY AVAILABLE

4.6.15 Road evaporation loss rates.- Throughout the road operation and road endurance tests, vaporization losses from the semitrailer liquid storage tank assembly shall be determined by passing all vented vapors through a recording- or totaling-type gas flowmeter. The ambient air temperature, the barometric pressure, the temperature of oxygen vapors entering the flowmeter, and the volume of vapor having passed through the flowmeter shall be recorded at appropriate intervals. The losses shall be converted to weight measurements and recorded as the percentage of design capacity vaporized per 24-hour day. The average loss rate for each type of road operation or test the semitrailer is subjected to shall be recorded on the test data sheets.

4.6.16 Road endurance test.- The road endurance test shall consist of the following four phases:

4.6.16.1 Phase A.- The liquid storage tank assembly shall be filled with liquid oxygen or liquid nitrogen to design capacity and the semitrailer towed by a truck tractor over the following road surfaces for the distances specified and at the specified speeds. Twenty-five short-radius, right-circle turns; twenty-five short-radius, left-circle turns; and five sudden stops shall be accomplished during the level, paved highway portion of the testing.

	Average Speed (MPH)	Max Speed (MPH)	Distance (Miles)
a. Level, paved highway	50	60	750
b. Graded, gravel road	20	25	200
c. Belgian block	Up to 15	20	50

4.6.16.2 Phase B.- The liquid storage tank assembly shall be filled with liquid oxygen or liquid nitrogen to between 60 and 70 percent of design capacity and the semitrailer subjected to the road testing specified in 4.6.16.1.

4.6.16.3 Phase C.- The liquid storage tank assembly shall be filled with liquid oxygen or liquid nitrogen to between 20 and 30 percent of design capacity and the semitrailer subjected to the road testing specified in 4.6.16.1.

4.6.16.4 Phase D.- The semitrailer shall be subjected to the road testing specified in 4.6.16.1 with the liquid storage tank assembly empty.

Provided by IHS
No reproduction or networking permitted without license from IHS
Licensee=NASA Technical Standards 4/9972545004, User=Norman, Raymond
Not for Resale, 01/15/2013 06:47:30 MST
BEST COPY AVAILABLE

4.6.16.5 Servicing and adjustments.- The semitrailer shall be serviced and the brakes adjusted before starting the road testing. Periodic servicing with lubricants and preventive maintenance adjustments shall be permitted during the testing at the intervals specified in the operation and service instruction handbook. Tires shall be serviced as necessary. No other servicing, reconditioning, or repair shall be permitted without prior approval of the procuring activity.

4.6.16.6 Inspection.- Throughout the road endurance test, the semitrailer shall be observed as to its trackability, ease of handling, tendency to yaw, tendency to sway, et cetera. Upon completion of the road endurance test, the semitrailer running gear and other components shall be inspected for excessive wear, misalignment, distortion, or any other damage sustained as a result of the testing. Undesirable roadability features and any excessive wear or damage resulting from the test that would affect its use and operation shall be cause for rejection. A complete description of any excessive wear or damage shall be recorded on the test data sheets.

4.6.17 Final heat leak evaporation loss test.- Not less than 30 days after the vacuum pumping specified in 4.3.8.1, with no vacuum pumping having been performed on the liquid storage tank annular space subsequent to that time, and with all other performance tests having been performed in the interval, the semitrailer shall be resubjected to the heat leak evaporation loss rate test specified in 4.6.8.2.

4.6.18 Servicing and maintenance tests.- All normal preventive maintenance and servicing operations specified in the handbook shall be performed to demonstrate their adequacy, ease of accomplishment, and the accessibility of parts and assemblies for performance of same. Insofar as practicable, these tests shall be conducted as part of the normal preventive maintenance, servicing, and inspections performed in accomplishing the testing specified herein. Interferences or obstructions to servicing or preventive maintenance shall be recorded in detail on the test data sheets.

4.6.19 Mechanical check.- Upon completion of the above tests, a critical inspection shall be made of components to determine their operability and any damage or undue wear incurred during the tests. Teardown and parts measurement shall be made only in those cases where service life is in question. Where teardown and parts measurement are performed, wear or distortion that exceeds limits allowed by the manufacturer for new parts shall be cause for considering the part or parts affected as having failed to complete the test satisfactorily.

Provided by IHS
No reproduction or networking permitted without license from IHS
Licensee=NASA Technical Standards 4/9972545004, User=Norman, Raymond
Not for Resale, 01/15/2013 06:47:30 MST
BEST COPY AVAILABLE

4.6.19.1 Ferrous parts subject to high stress in operation and that are suspected of having defects shall also be subjected to magnetic particle inspection (magnaflux) and shall exhibit no indications of damage attributable to the tests, or shall be considered as having failed the test. Magnetic particle inspection shall be performed in accordance with MIL-I-6868.

4.6.19.2 Nonmagnetic parts suspected of defects shall be subjected to inspection with fluorescent penetrant (black light) and shall exhibit no indications of defects or damage attributed to the tests that would impair their life or usefulness, or shall be considered as having failed the test. Penetrant inspection shall be performed in accordance with MIL-I-6866.

4.7 Inspection of preparation for delivery.- Preservation, packaging, packing, and marking shall be inspected to verify conformance to the requirements of section 5 herein, and the contract.

5. PREPARATION FOR DELIVERY

5.1 General instructions

5.1.1 Cleaning.- The semitrailer shall be thoroughly cleaned to remove excess and spilled lubrication materials; loose or chipped paint; spilled chemicals; and other foreign materials. All cleaning solvents shall be thoroughly removed from the semitrailer components prior to delivery.

5.1.1.1 Degreasing.- Semitrailer surfaces, parts, fittings, et cetera, that will be in contact with high-purity oxygen shall be degreased by one of the following methods. Precautions shall be taken to insure that solvents do not contact parts fabricated from incompatible materials.

Method A - Vapor degreasing process, using stabilized trichlorethylene conforming to MIL-T-7003 in a standard commercial vapor degreaser or by blowing degreasing vapors into the component in such a manner that the vapor will condense on and properly clean all surfaces requiring degreasing. Operation of a commercial vapor degreaser shall be in accordance with the manufacturer's recommendations. Following the vapor degreasing treatment, all solvent shall be removed by baking in an oven, by purging with hot, dry, oil-free air or nitrogen, or by vacuum evacuation.

Method B - Solvent degreasing process, using stabized trichlorethylene or commercial oxygen-safe cleaning solvent at ambient temperatures to thoroughly wash all surfaces requiring degreasing.

Provided by IHS
No reproduction or networking permitted without license from IHS
Licensee=NASA Technical Standards 4/9972545004, User=Norman, Raymond
Not for Resale, 01/15/2013 06:47:30 MST
BEST COPY AVAILABLE

Method C - Detergent degreasing process, in which the components to be cleaned are washed with hot inhibited alkaline cleaner until free from oil, grease, and other contaminant materials. Following this treatment, all surfaces (internal and external) shall be rinsed thoroughly with fresh, clean, hot water and dried by blowing with filtered and dried, oil-free air or nitrogen, or by baking at a temperature of 250° to 300° F until all water is removed.

5.1.1.1.1 Petroleum and other flammable solvents shall not be used on the surfaces specified in 5.1.1.1.

5.1.1.2 Cleaning effectiveness tests

5.1.1.2.1 Visual inspection.- All equipment, pipes, and components that will contact LO_2 or LN_2 shall be visually examinated for evidence of corrosion products, metal chips, scale, weld scale, oil, grease, paints, preservatives, decals, or other contamination or foreign matter. Any evidence of contamination or foreign matter shall require recleaning and retest.

5.1.1.2.2 Ultraviolet light inspection.- All accessible surfaces and parts that will contact LO_2 or LN_2 shall be visually inspected for hydrocarbons with ultraviolet light. Any evidence of fluorescence shall require recleaning and retest.

5.1.1.2.3 Particulate matter test.- Following the cleaning and degreasing operations specified herein and equipment final assembly, the semitrailer liquid storage tank inner shell shall be filled to not less than 90 percent of design capacity with liquid oxygen or liquid nitrogen. The semitrailer shall then be towed not less than 2 miles during which not less than 10 sudden stops from a speed of between 10 and 15 mph shall be performed. Following this road operation, a 2-liter or larger dewar flask shall be placed under the discharge end of the sump drain line specified in 3.9.1.3.4, the sump drain line shutoff valve opened, and not less than one liter of the first liquid discharged through the line collected in the dewar flask. This sample shall be evaporated to dryness and the residue examined for particulate matter. The liquid storage tank assembly and the associated piping and fittings shall be recleaned and this test repeated until the particulate matter remaining as residue contains:

a. No solid particle with any dimension greater than 1,000 microns

b. No more than five solid particles with any dimension between 500 and 1,000 microns

Provided by IHS
No reproduction or networking permitted without license from IHS
Licensee=NASA Technical Standards 4/9972545004, User=Norman, Raymond
Not for Resale, 01/15/2013 06:47:30 MST
BEST COPY AVAILABLE

c. No more than 20 solid particles with any dimension between 350 and 500 microns

d. No fibrous particles with a length greater than 2,000 microns

e. No more than 10 fibrous particles with a length between 1,000 and 2,000 microns

f. No more than 25 milligrams total of both solid and fibrous particles (see 6.4.5).

5.1.1.2.4 Total solids test.- Following withdrawal of the 1-liter sample specified in 5.1.1.2.3, the entire load of contained liquid shall be discharged to the level of the standpipe at a flow rate of not less than 150 gpm through the liquid transfer line specified in 3.9.1.7.1 and the filter specified in 5.1.1.2.4.1. The filter shall be thoroughly cleaned and the removed material collected, dried, and weighed after each use. If more than 0.5 gram of contaminant material is collected on the filter during discharge of the liquid from the semitrailer, the liquid storage tank assembly and the associated piping and fittings shall be recleaned. Cleaning and testing shall be repeated until the total amount of contaminant collected on the filter from discharging the liquid storage tank assembly load is less than 0.5 gram.

5.1.1.2.4.1 Filter.- The filter shall be multilayer, stainless-steel wire wound, or stainless-steel wire mesh cloth type in which the wires have been fused under controlled conditions and which has a thickness that will insure the specified performance. The filter element shall be fused to the housing in a manner that will insure against liquid bypassing the filter element. The filter shall remove 98 percent by weight of all particles whose two smallest dimensions are 10 microns or greater (10 micron nominal rating). The filter shall further remove all particles whose two smallest dimensions are 40 microns or greater (40 micron absolute rating).

5.1.2 Liquid storage tank assembly preparation.- Following cleaning and flushing, the liquid storage tank assembly inner shell shall be drained of all liquids and purged with not less than 1,000 standard (20° F and 760 mm Hg) cubic feet of clean, dry, oil-free nitrogen gas introduced through the liquid fill line specified in 3.9.1.7.3. The vapor phase vent line shutoff valve specified in 3.9.1.7.2.1 shall be closed and the purging gas allowed to escape through the drain line specified in 3.9.1.3.4. Following the purging, the inner shell shall be pressurized to not less than 10 psig nor more than 20 psig with clean, dry, oil-free nitrogen gas, after which every valve and line

Provided by IHS
No reproduction or networking permitted without license from IHS
Licensee=NASA Technical Standards 4/9972545004, User=Norman, Raymond
Not for Resale, 01/15/2013 06:47:30 MST
BEST COPY AVAILABLE

leading into the inner shell shall be closed. The ends of all pipes, tubes, and couplings shall be securely sealed with pressure-sensitive tape conforming to PPP-T-60. The liquid storage tank assembly annular space shall be evacuated to the absolute pressure recommended in the semitrailer operating and servicing instruction handbook if it is not at or below that pressure at the time of preparation for delivery. The vacuum line shutoff valve shall be tightly closed after the evacuation and the vacuum line sealed with the cap provided. No other preparation shall be accomplished on the liquid storage tank interior. A Type A tag conforming to UU-T-81, with tag and printing waterproofed, stating that the liquid storage tank assembly inner shell is clean and pressurized with clean, dry, oil-free nitrogen gas and the annular space has been evacuated, shall be securely attached to the vapor vent line shutoff valve handle in a conspicuous location.

5.1.3 Repainting.- Semitrailer surfaces on which the paint is damaged or defective shall be thoroughly cleaned and repainted as specified under 3.13.

5.1.4 Lubrication.- All semitrailer machined bearing surfaces that are normally lubricated in operation, that do not come into contact with high-purity oxygen, and for which preservation requirements are not specified herein shall be thoroughly lubricated with the recommended lubricants to be ready for immediate operation.

5.1.4.1 Preservatives.- Preservatives and lubricants shall not be applied to any part of the equipment that will come into contact with high-purity oxygen.

5.1.5 Physical protection.- Cushioning, blocking, bracing, and bolting as necessary for compliance with the requirements specified herein shall be in accordance with JAN-P-100. The drop tests of JAN-P-100 shall be waived when the drop tests of MIL-P-116 are applicable.

5.1.6 Securing for shipment.- Small items and packages not fastened to major components shall be secured to or packed with major components to insure against accidental loss or damage caused by movement during shipping.

5.2 Preservation, packaging, and packing

5.2.1 Level A.- The semitrailer shall be preserved, packaged, and packed as specified in 5.2.2.2 and, in addition, shall have the strip-coated portions overcoated with strippable coating conforming to MIL-C-3254.

Provided by IHS
No reproduction or networking permitted without license from IHS
Licensee=NASA Technical Standards 4/9972545004, User=Norman, Raymond
Not for Resale, 01/15/2013 06:47:30 MST
BEST COPY AVAILABLE

A type II and a type III coat shall be applied. The thickness of the strip coating and the amount of desiccant to be used shall be as specified by the procuring activity (see 6.2). Humidity indicator cards shall be placed inside the waterproof-vaporproof barrier in locations that will provide good indications of the moisture content of the air in the enclosed space. Windows conforming to MIL-W-10434 shall be provided in the strip coating adjacent to each of these humidity indicator cards in order that they may be readily observed from outside the control housing assembly without disturbing the strip coating.

5.2.2 Level B (see section 6)

5.2.2.1 Domestic.- The semitrailer shall be preserved, packed, and packed as specified under 5.1 and in accordance with the manufacturer's commercial practice in a manner that will insure safe transportation at the lowest rate to the point of delivery. Packaging material in direct contact with unprotected surfaces susceptible to damage by corrosion shall conform to MIL-B-121, MIL-P-130, MIL-A-148, or MIL-P-4185. Shipping packages shall meet Consolidated Freight Classification rules, National Motor Freight Classification rules, or regulations of other common carriers as applicable to the mode of transportation.

5.2.2.2 Overseas.- The semitrailer shall be preserved, packaged, and packed as specified under 5.1 and as follows:

5.2.2.2.1 Liquid storage tank assembly.- Outside surfaces of the liquid storage tank assembly, except lines, valves, and other parts within the control and accessory housing assembly or that contact high-purity oxygen, shall be cleaned and all exposed threads or unpainted surfaces coated with Type P-1 preservative as specified in MIL-P-116.

5.2.2.2.2 Pressure buildup system vaporization coil.- Parts of the vaporization coil and shrouding shall be cleaned and all exposed threads or unpainted surfaces other than the heat exchange surfaces coated with Type P-1 preservative as specified in MIL-P-116.

5.2.2.2.3 Equipment within control and accessory housing assembly

5.2.2.2.3.1 Drying.- Components within the control and accessory housing assembly shall be thoroughly dried of liquids other than lubricants, and purged with clean, dry, oil-free air or nitorgen. All valves shall be closed and remain closed for shipment and storage. All openings into components and all disconnect fittings shall be capped, and sealed with pressure-sensitive tape conforming to PPP-T-60.

Provided by IHS
No reproduction or networking permitted without license from IHS
Licensee=NASA Technical Standards 4/9972545004, User=Norman, Raymond
Not for Resale, 01/15/2013 06:47:30 MST
BEST COPY AVAILABLE

5.2.2.2.3.2 Instrument protection.- All instrument and control dial glasses shall be covered with greaseproof barrier-material conforming to MIL-B-121 and bridged with pieces of fitted plywood or other similar material secured in place with pressure-sensitive tape conforming to PPP-T-60.

5.2.2.2.4 Liquid transfer hoses.- Both ends of each liquid transfer hose shall be fitted with protective caps and sealed with pressure-sensitive tape conforming to PPP-T-60. Each end shall then be wrapped for not less than 2 feet with greaseproof barrier-material conforming to MIL-B-121, and sealed with pressure-sensitive tape. Each liquid transfer hose shall then be inserted into its storage tube.

5.2.2.2.5 Fire extinguishers.- The fire extinguishers shall be wrapped with greaseproof barrier material conforming to MIL-B-121, and sealed with pressure-sensitive tape conforming to PPP-T-60. The fire extinguishers shall be stored in the control and accessory housing assembly and securely fastened in place.

5.2.2.2.6 Maintenance tools.- Maintenance tools and similar equipment shall be securely packed in the tool compartment and cushioned with cellulosic cushioning material conforming to PPP-C-843 in a manner that will prevent damage and minimize movement.

5.2.2.2.7 Accessories.- Where applicable, semitrailer accessories shall be consolidated into packing boxes. Boxes shall be securely strapped with a minimum of two steel strappings conforming to QQ-S-781. The boxed accessories shall be stored within the control housing and accessory housing assembly and securely fastened in place.

5.2.2.2.8 Technical publications.- Technical publications shall be packaged in accordance with MIL-P-116, method IA-8, and placed in the handbook compartment.

5.2.2.2.9 Other components.- Semitrailer components for which no specific preservation and packaging instructions are specified herein shall be secured within the control and accessory housing assembly.

5.2.2.2.10 Control and accessory housing assembly, pressure buildup assembly, and liquid transfer hose storage tubes

5.2.2.2.10.1 Control and accessory housing assembly.- The control and accessory housing assembly shall be preserved and packaged by coating the entire assembly with a sprayable stripcoating conforming to MIL-S-8141 to form a waterproof-vaporproof barrier. The stripcoating shall be applied in a manner that will insure complete mobility of the semitrailer during shipment and storage. Desiccant shall be placed within the barrier as specified herein.

Provided by IHS
No reproduction or networking permitted without license from IHS
Licensee=NASA Technical Standards 4/9972545004, User=Norman, Raymond
Not for Resale, 01/15/2013 06:47:30 MST
BEST COPY AVAILABLE

5.2.3 Level C.- The semitrailer shall be preserved, packaged, and packed as specified under 5.1 and in accordance with the manufacturer's commercial practice in a manner that will insure safe transportation at the lowest rate to the point of delivery. Shipping packages shall meet Consolidated Freight Classification rules, National Motor Freight Classification rules, or regulations of other common carriers, as applicable to the mode of transportation.

5.2.4 Locking of access opening.- Semitrailer control and accessory housing assembly access doors, with the exception of the control panel access door, shall be locked with the padlocks specified in 3.9.5.7. The control panel access door padlock and all padlock keys shall be fastened to the control panel. The control panel access door shall then be sealed with a nonreusable, ribbon-type or wire-type, serial-numbered car seal.

5.3 Marking of shipment.- Interior packages and exterior shipping containers shall be marked in accordance with MIL-STD-129. The nomenclature shall be as follows:

SEMITRAILER, TANK AF/M32A-4A

6. NOTES

6.1 Intended use.- The AF/M32A-4A semitrailer covered by this specification is intended for use in road transporting large quantities of liquid oxygen or liquid nitrogen from a generating or supply site to using locations, and there either transferring the liquid into stationary storage containers or being used for temporary storage of the liquid with relatively low evaporation loss rates.

6.2 Ordering data.- Procurement documents should specify the following:

a. Title, number, and date of this specification

b. Whether a complete set of all special tools, other than common handtools and those normally available in motor vehicle repair shops, are to be provided (see 3.9.5.4)

c. Registration numbers required (see 3.14.1.1)

d. Whether the preproduction test sample is to be submitted to the procuring activity (see 4.4.3.)

e. Thickness of strip coating and amount of desiccant (see 5.2.1)

Provided by IHS
No reproduction or networking permitted without license from IHS
Licensee=NASA Technical Standards 4/9972545004, User=Norman, Raymond
Not for Resale, 01/15/2013 06:47:30 MST
BEST COPY AVAILABLE

f. Whether instruction manuals covering operation, servicing, and maintenance of the semitrailer, or other technical publications (including quantities and disposition) will be provided with each unit

g. Required level of preservation, packaging and packing. (see section 5.)

(1) Level B preservation and packaging are intended to provide economical but limited protection, and should be specified only when determined to be appropriate. Effective period of protection is 180 days from date of initial packaging. (see 6.2.)

6.3 Storage surveillance.- Items preserved and packaged in accordance with level B requirements must be inspected to determine condition when not used within the time period indicated. Items not used within the time period specified must either be represerved or repackaged in accordance with level B requirements in this specification or with level A requirements if storage beyond and additional year is anticipated.

6.4 Definitions.- The following definitions shall apply for the purposes of this specification:

6.4.1 Ambient conditions.- Ambient conditions are the dry-bulb temperature, wet-bulb temperature, and the relative humidity of the atmospheric air surrounding and in the vicinity of the semitrailer, but unaffected by any heat or cold emanating from the semitrailer itself.

6.4.2 Pressures.- Unless specified as absolute or denoted by the symbol psia, all pressures referred to herein will be interpreted as pounds per square inch (psi) gage.

6.4.3 Improved road.- An improved road is a smooth, hard-surfaced road such as a concrete or asphalt paved highway.

6.4.4 Unimproved road.- An improved road is an unsurfaced road of dirt, gravel, or similar construction.

6.4.5 Fibrous particle.- A fibrous particle is defined as a long, slender particle whose maximum cross-sectional dimension is 40 microns.

Provided by IHS
No reproduction or networking permitted without license from IHS
Licensee=NASA Technical Standards 4/9972545004, User=Norman, Raymond
Not for Resale, 01/15/2013 06:47:30 MST
BEST COPY AVAILABLE

Notice. When Government drawings, specification, or other data are used for any purpose other than in connection with a definitely related Government procurement operation, the United States Government thereby incurs no responsibility nor any obligation whatsoever; and the fact that the Government may have formulated, furnished, or in any way supplied the said drawings, specifications, or other data is not to be regarded by implication or otherwise as in any manner licensing the holder or any other person or corporation, or conveying any rights or permission to manufacture, use, or sell any patented invention that may in any way be related thereto.

OWB/BLW/rm/bg
ASNN

Provided by IHS
No reproduction or networking permitted without license from IHS
Licensee=NASA Technical Standards 4/9972545004, User=Norman, Raymond
Not for Resale, 01/15/2013 06:47:30 MST
BEST COPY AVAILABLE