THE INFORMATION CONTAINED IN THIS DRAWING IS THE SOLE PROPERTY OF NASA/AMES RESEARCH CENTER ANY REPRODUCTION IN PART OR WHOLE WITHOUT THE WRITTEN PERMISSION OF NASA/AMES RESEARCH CENTER IS PROHIBITED.

REVISIONS			
REV.	DESCRIPTION	DATE	APPROVED
-	XXXXXX	12/04/09	

NOTES:

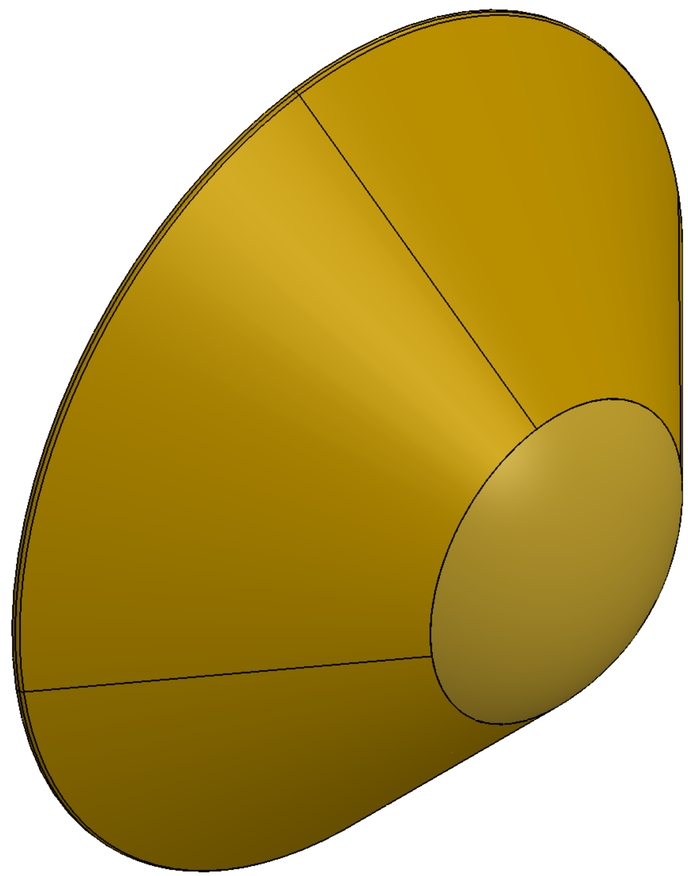

ITEM NO.	PART OR IDENTIFYING NO.	NOMENCLATURE OR DESCRIPTION	MATERIAL SPECIFICATION	QTY REQD

UNLESS OTHERWISE SPECIFIED DIMENSIONS ARE IN **INCHES**. ALL DIMENSIONS AND TOLERANCES APPLY AFTER SURFACE TREATMENT

TOLERANCE UNLESS OTHERWISE SPECIFIED:

FRACTIONS	DECIMALS	ANGLES
±1/64	.X ± 0.1	±1
	.XX ± 0.01	
	.XXX ± 0.005	

BREAK SHARP CORNERS 0.02 MAX

MATERIAL

ALL MACHINED SURFACES TO BE 64 √ EXCEPT WHERE NOTED

APPROVALS	DATE
ORIGINATOR / DESIGNER J. RIDGE	7/30/12
CHECKED	
THERMAL TESTING LEAD	
HEAT SHIELD MANAGER	
V&V LEAD	
R & QA	
SAFETY	
SUPERVISOR	

NASA/Ames Research Center
Moffett Field, CA 94035

VENUS AEROSHELL CONFORMABLE TPS ASSEMBLY

NEXT ASSY	USED ON

APPLICATION

DO NOT SCALE DRAWING

SIZE	DWG. NO.	REV.
D		-
SCALE 1:8	PART NUMBER:	SHEET 1 OF 3

DRAFT

THE INFORMATION CONTAINED IN THIS DRAWING IS THE SOLE PROPERTY OF NASA/AMES RESEARCH CENTER ANY REPRODUCTION IN PART OR WHOLE WITHOUT THE WRITTEN PERMISSION OF NASA/AMES RESEARCH CENTER IS PROHIBITED.

REVISIONS			
REV.	DESCRIPTION	DATE	APPROVED
-	XXXXXX	12/04/09	

NOTES:

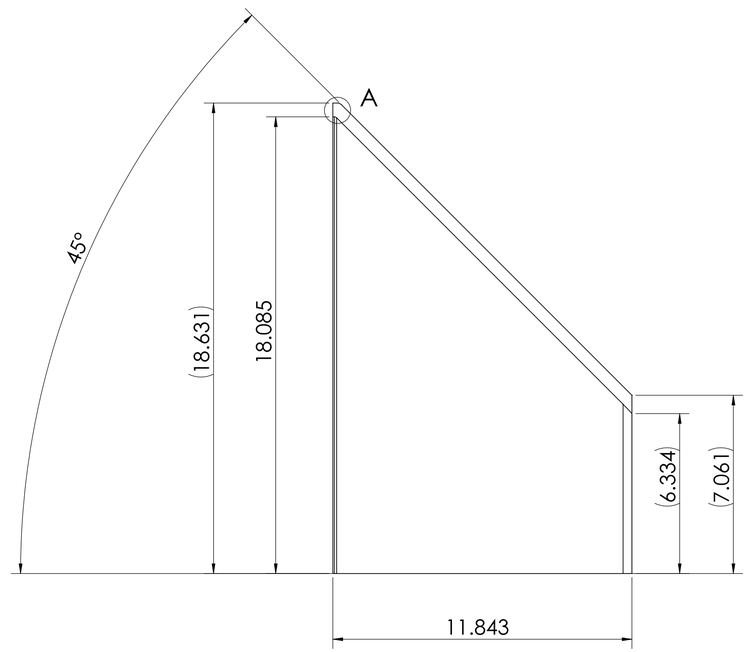

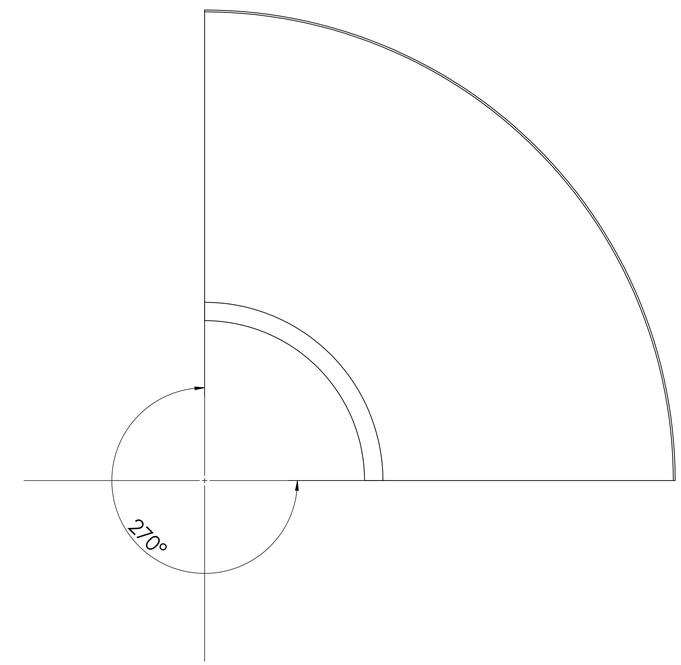

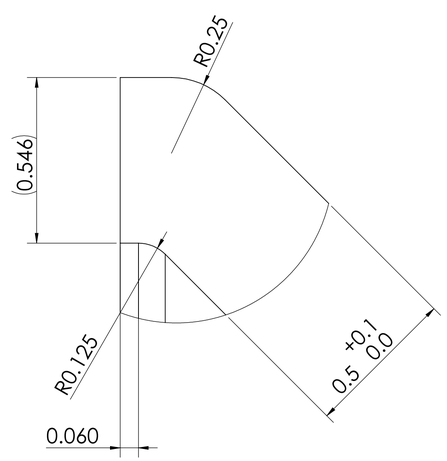

DETAIL A
SCALE 4 : 1

DRAFT

ITEM NO.	PART OR IDENTIFYING NO.	NOMENCLATURE OR DESCRIPTION	MATERIAL SPECIFICATION	QTY REQD

UNLESS OTHERWISE SPECIFIED DIMENSIONS ARE IN **INCHES**, ALL DIMENSIONS AND TOLERANCES APPLY AFTER SURFACE TREATMENT

TOLERANCE UNLESS OTHERWISE SPECIFIED:

FRACTIONS ±1/64 | DECIMALS .X ± 0.1, .XX ± 0.01, .XXX ± 0.005 | ANGLES ±1

BREAK SHARP CORNERS 0.02 MAX

MATERIAL
XXXX

ALL MACHINED SURFACES TO BE 64 √ EXCEPT WHERE NOTED

APPROVALS	DATE
ORIGINATOR / DESIGNER J. RIDGE	7/30/12
CHECKED	
THERMAL TESTING LEAD	
HEAT SHIELD MANAGER	
V&V LEAD	
R & QA	
SAFETY	
SUPERVISOR	

NASA/Ames Research Center
Moffett Field, CA 94035

VENUS AEROSHELL
CONFORMABLE QUADRANT

NEXT ASSY	USED ON
APPLICATION	

DO NOT SCALE DRAWING

SIZE	DWG. NO.	REV.
D		-
SCALE 1:4	PART NUMBER:	SHEET 2 OF 3

THE INFORMATION CONTAINED IN THIS DRAWING IS THE SOLE PROPERTY OF NASA/AMES RESEARCH CENTER ANY REPRODUCTION IN PART OR WHOLE WITHOUT THE WRITTEN PERMISSION OF NASA/AMES RESEARCH CENTER IS PROHIBITED.

REVISIONS			
REV.	DESCRIPTION	DATE	APPROVED
-	XXXXXX	12/04/09	

NOTES:

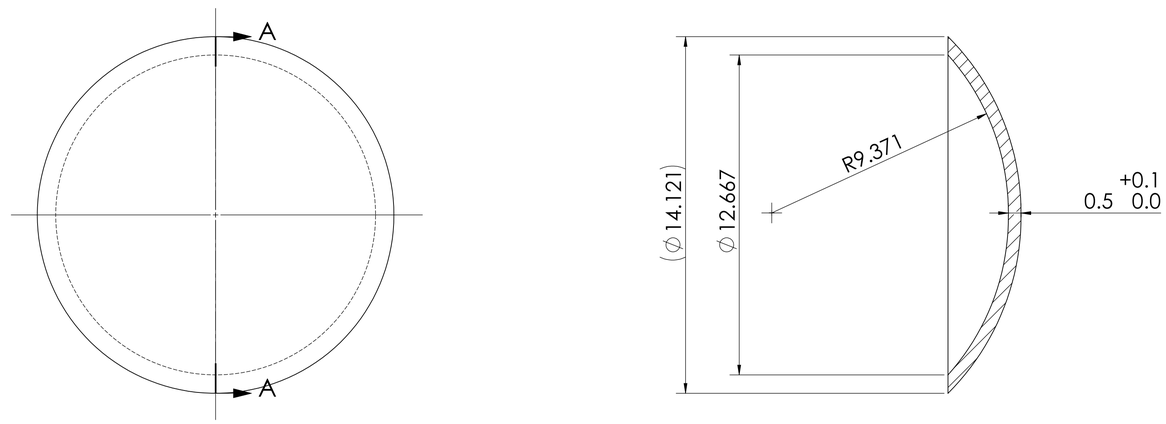

SECTION A-A
SCALE 1 : 3

DRAFT

ITEM NO.	PART OR IDENTIFYING NO.	NOMENCLATURE OR DESCRIPTION	MATERIAL SPECIFICATION	QTY REQD

UNLESS OTHERWISE SPECIFIED DIMENSIONS ARE IN **INCHES.** ALL DIMENSIONS AND TOLERANCES APPLY AFTER SURFACE TREATMENT

TOLERANCE UNLESS OTHERWISE SPECIFIED:

FRACTIONS ±1/64 | DECIMALS .X ± 0.1, .XX ± 0.01, .XXX ± 0.005 | ANGLES ±1

BREAK SHARP CORNERS 0.02 MAX

MATERIAL
XXXX

ALL MACHINED SURFACES TO BE 64 √ EXCEPT WHERE NOTED

NEXT ASSY	USED ON

APPLICATION

DO NOT SCALE DRAWING

APPROVALS	DATE
ORIGINATOR / DESIGNER J. RIDGE	7/30/12
CHECKED	
THERMAL TESTING LEAD	
HEAT SHIELD MANAGER	
V&V LEAD	
R & QA	
SAFETY	
SUPERVISOR	

NASA/Ames Research Center
Moffett Field, CA 94035

VENUS AEROSHELL CONFORMABLE CAP

SIZE D | DWG. NO. | REV. -

SCALE 1:4 | PART NUMBER: | SHEET 3 OF 3