| DWG NO | SHEET | REV |
|---|---|---|
| A329-0802-M47 | 1 | 2 |

Notes:
1. Optical surfaces to be polished to 2 fringes of power and 1 fringe of irregularity.
2. Optical surfaces to meet 60-40 scratch dig specification.
3. Clear aperture is within 0.020" of perimeter on optical faces.

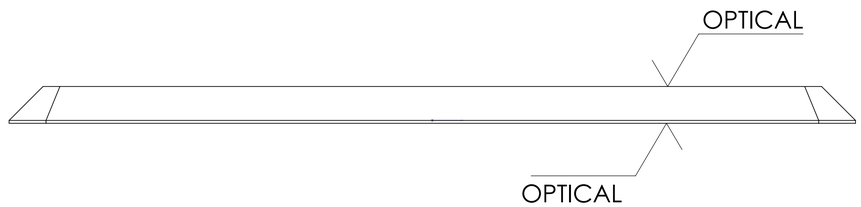


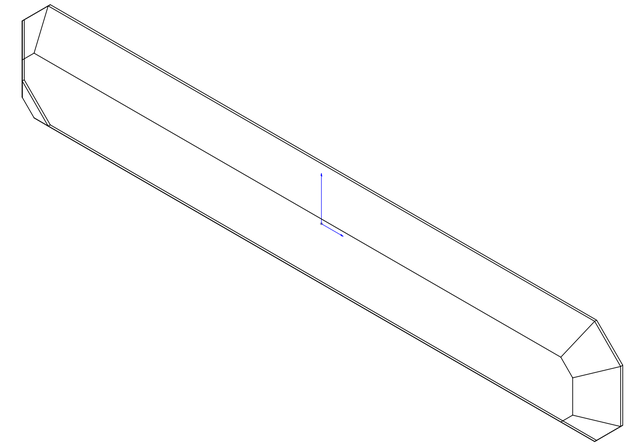

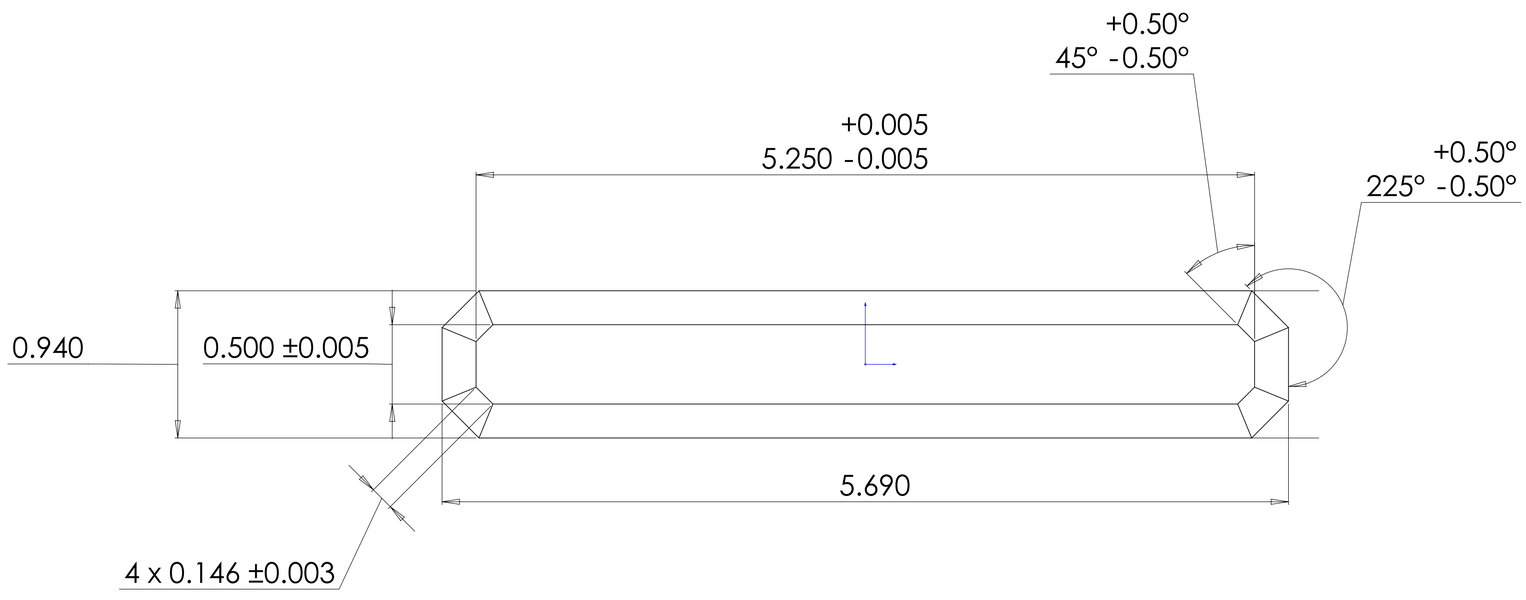


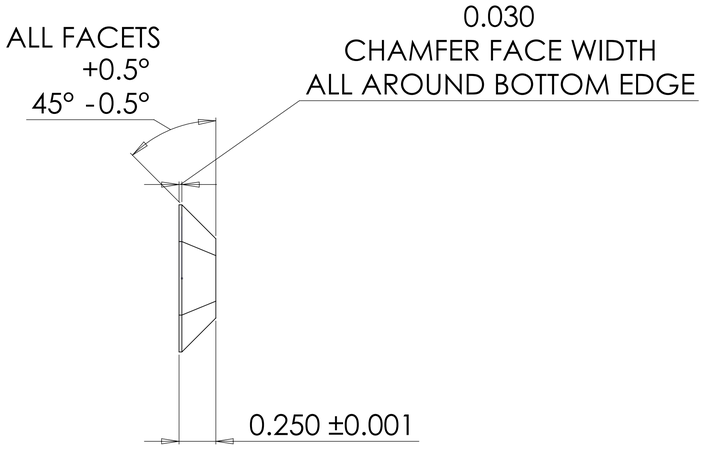


| ZONE | LETTER | | DRAWN | DATE | APPRVD |
|---|---|---|---|---|---|
| | | | | | |

REVISIONS


**PROPRIETARY AND CONFIDENTIAL**
THE INFORMATION CONTAINED IN THIS DRAWING IS NASA SENSITIVE TECHNOLOGY. IT IS THE SOLE PROPERTY OF NASA AND NOT TO BE DISTRIBUTED OR REPRODUCED IN PART OR AS A WHOLE WITHOUT THE WRITTEN PERMISSION OF NASA.


MATERIAL
$MgF_2$

UNLESS OTHERWISE SPECIFIED DIMENSIONS ARE IN INCHES
TOLERANCES:
ANGLES: ± 1/2° FRACTIONS: ±1/64
DECIMALS: .XX ± .05 .XXX ± .01
DIA. ON SAME AXIS CONCENTRIC TO T.I.R.
BREAK SHARP CORNERS AT MAX
ALL DIMENSIONS AND TOLLERANCES APPLY AFTER FINISH TREATMENT
ALL MACHINED SURFACES TO BE: EXCEPT WHERE NOTED
DO NOT SCALE DRAWING

| | | DATE |
|---|---|---|
| DRAWN | RMARTINEZ | 1/16/12 |
| DESIGNED | | DATE |
| CHECKED | BCRUDEN | 1/16/12 |
| PROJMGR | | DATE |
| REQUESTER | BCRUDEN | 1/16/12 |
| R&QA | | DATE |
| SAFETY | | DATE |
| SUPERVISOR | | DATE |
| PROJMGR | | DATE |

**Ames Research Center**
Moffett Field, California

N229-ELECTRIC ARC SHOCK TUBE
EAST FACILITY

# RECTANGULAR MgF2 WINDOW

| SIZE | CAGE CODE | | REV |
|---|---|---|---|
| D | | A329-0802-M47 | 2 |
| SCALE | | INDEX DATE | SHEET 1 OF 1 |
| | | FILE NAME: -- | |