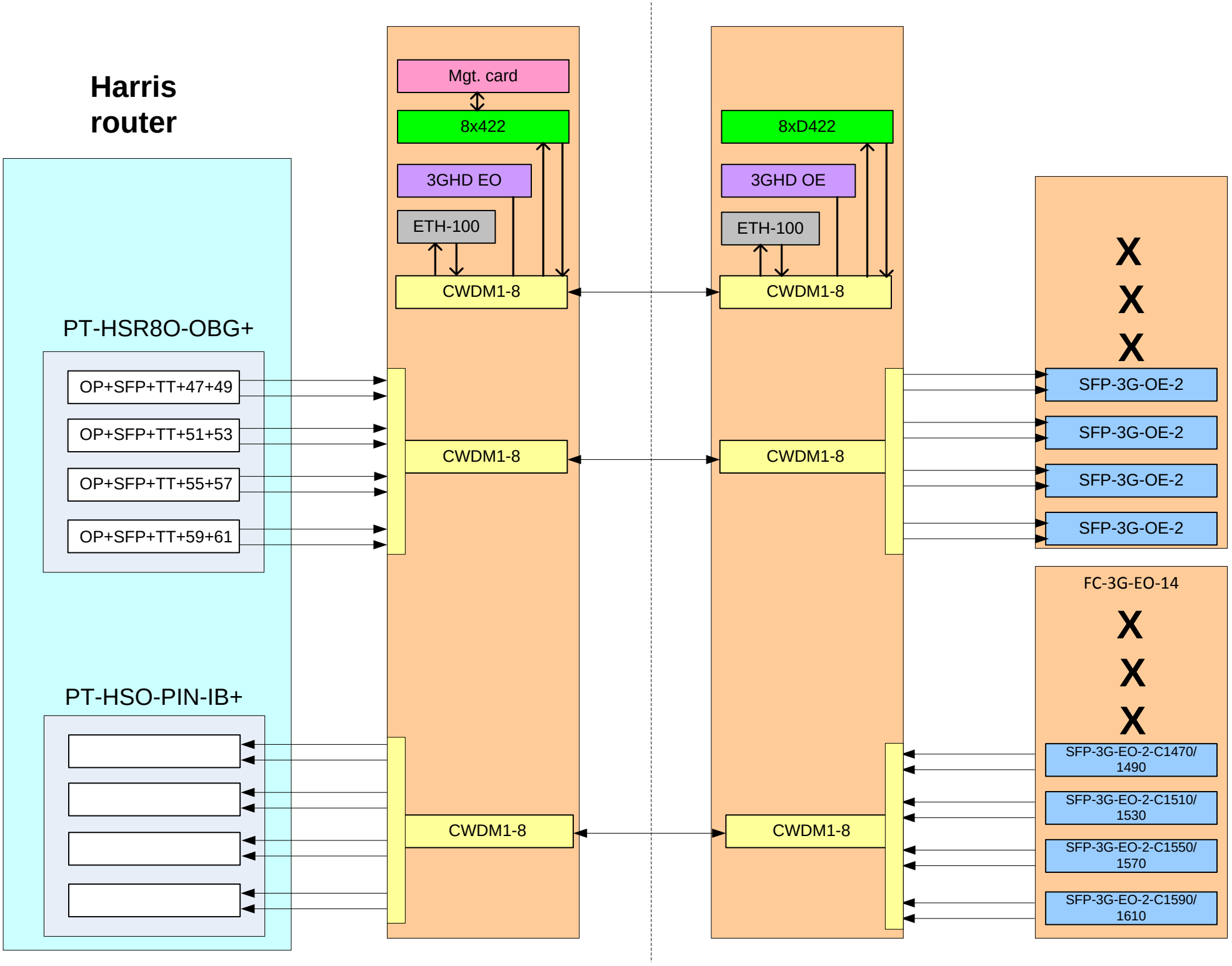
Harris router
PT-HSR8O-OBG+
OP+SFP+TT+47+49
OP+SFP+TT+51+53
OP+SFP+TT+55+57
OP+SFP+TT+59+61
PT-HSO-PIN-IB+
Mgt. card
8x422
3GHD EO
ETH-100
CWDM1-8
CWDM1-8
CWDM1-8
8xD422
3GHD OE
ETH-100
CWDM1-8
CWDM1-8
CWDM1-8
X
X
X
SFP-3G-OE-2
SFP-3G-OE-2
SFP-3G-OE-2
SFP-3G-OE-2
FC-3G-EO-14
X
X
X
SFP-3G-EO-2-C1470/ 1490
SFP-3G-EO-2-C1510/ 1530
SFP-3G-EO-2-C1550/ 1570
SFP-3G-EO-2-C1590/ 1610