• KSC Integrated Ground Operations Demonstration Unit Recirculating Process Chiller Requirements Specification

June 1, 2012
Rev basic
F. David Koci

SCOPE of SUPPLY

The scope of this procurement covers the detailed design, manufacture, testing and delivery of a packaged recirculating process chiller unit to be installed and operated at the NASA Kennedy Space Center (KSC). The closed-loop chiller system with integral air-cooled condenser shall provide approx. 16 gpm of cooling water during normal operations to two major process units at a nominal inlet temperature of 68 - 75 °F. The equipment to be cooled includes a helium compressor with an in-series oil after-cooler and a water-cooled Edwards vacuum pump. The baseline chiller capacity shall have a nominal operating cooling load of approx. 76 kW at 16 gpm of water flow, however the design cooling load shall be at least 96 kW rated for delivering 25 gpm of cooling water at a 55 psig pump discharge pressure. The government has in essence incorporated the required design margins into this specification for both unanticipated coolant flow rate demands and increased chiller capacity needs. The chiller unit will be located at KSC outdoors in an area that will contain both liquid and gaseous hydrogen subsystems so the chiller must by necessity be electrically rated for Class 1, Division 2, Group B (explosion proof design) and shall be capable of remote operation. The detailed requirements and vendor proposal response guidelines for the process chiller unit requested by the government, are defined in this procurement specification and are herein outlined below numerically by items 1 thru 30 for those interested and qualified vendor/suppliers to respond to.

1) Equipment: Packaged Recirculating Chiller Unit

2) Order Qty: 1

3) NASA Tag ID: XXXXXX (Packaged Chiller) (note 1)

(note 1: Unit complete w/air-cooled condenser, water circulating pump and controls for remote operation)

4) Process Description: Closed loop cooling for Integrated Ground Operations Demonstration Unit for Liquid Hydrogen 20K Cryogenic refrigeration system. The chiller unit will provide cooling water for the Linde RSX helium compressor stream and oil after-cooler stream, and the vacuum pump.

5) Liquid to be cooled: 100% water (de-ionized)

6) Type of cooling circuit: Closed Loop: From chiller through helium compressor and oil coolant systems, and a parallel circuit through vacuum pump then back to chiller. (see fig. 1 - block flow diagram)

7) Chiller discharge adjustable design temperature, range: 10 to 32 °C
50 to 90 °F

8) Nominal chiller discharge operating temperature range: 20 to 24 °C
68 to 75 °F

9) Flow rate of coolant fluid through chiller: (normal to maximum) 61 to 95 LPM (16 to 25 GPM)

10) Pump discharge Pressure to circulate coolant through the loop:
380 kPa (55 psig @ max flow = 25 gpm)

11) Chiller Design Capacity @ 90°F Ambient:

Outlet Temp °C (°F)		kW	Btu/hr
24	(75)	96	328,000

(chiller capacity requirement shown here includes margin)

12) Power Supply: 480 V / 60 Hz / 3 ϕ

13) Chiller Configuration: Closed-Loop Recirculating Packaged Chiller

14) Condenser Type: Air Cooled, Self-Contained

15) Installation Location: Outdoors (outdoor, hazardous environment)

16) Ambient Temperature Range: 3.3 – 33.3 °C (38 – 92 °F) (outdoors – dry bulb)

17) Hazardous Area Classification: Shall meet NEC standard for Class 1, Division 2, Group B

18) Outdoor Enclosures & Cabinetry: Enameled aluminum (or non-rusting equivalent). Complete unit shall be made weather resistant for outdoor installation.

19) Chiller coolant plumbing connections: 2-1/2" MNPT (In / Out)

20) Pressure Relief: Water recirculating pump shall be equipped with a pressure relief valve rated for relieving excess pressure above system design pressure from the pump discharge line back to the return line to avoid system damage.

Chiller Instrumentation & Controls to be Supplied by Vendor:

21) Close Temperature Control: Solid state PID temperature controller ± 0.25 °C (± 0.5 °F) of set-point w/analog I/O for local or remote temp. control & monitoring. Include high/low temp alarm w/warning signals signifying a condenser fan or compressor failure. Adjustable temp. control range of 10 to 32 °C (50 to 90 °F).

22) Level Gauge : Local Sight-glass level gauge for coolant tank level

23) Pressure Gauge : Pump discharge water coolant pressure

24) Dial Thermometer : Pump discharge water coolant temperature

25) Remote Control Panel: Design shall provide remote control capability to allow chiller system start-up, shut-down and temperature set-point changes via a remote control panel located inside the Test facility. (*see note 2*)

General Notes:

(1) Analog I/O's shall be 4 – 20 mA

(2) Vendor shall quote this feature as an optional accessory w/separate pricing.

(3) The above specifications are minimum requirements. The chiller vendor shall supply other as-necessary mechanical or electrical design features including instrumentation & controls for proper and safe equipment operation.

(4) Vendor shall provide schematics (*mechanical/electrical*) and unit dimensions with their cost proposal.

(5) Vendor shall provide manufacturer's warranty on parts of not less than 12 months from time of delivery.

26) Testing:
The vendor/supplier shall perform a chiller load test at design conditions at their facility prior to shipping. The intent of the load test shall be to demonstrate that the unit meets the requirements of this specification. The vendor shall at the minimum measure and record the following chiller performance parameters during test:

- coolant Inlet/Outlet temperatures
- coolant Inlet/Outlet pressures
- coolant flow rate
- ambient temperature
- external heat load
- refrigerant head/suction pressures

27) Delivery Destination:
The vendor/supplier shall include in their firm-fixed price cost proposal to the Government, FOB shipping costs of the packaged chiller to the following location:

NASA Kennedy Space Center
ISC Receiving, Bldg. M6-744
Kennedy Space Center, FL 32899
Attn: Bill Notardonato
KSC Contact: Bill Notardonato cell (321) 412-5352

28) Documentation Deliverables:
The vendor/supplier shall provide at a minimum three (3) copies of the following documentation at time of equipment delivery:

- Installation, Operation and Maintenance Manuals
- Load test report
- Chiller Fluid System Schematic
- Electrical Wiring Diagram
- Mechanical Drawing w/dimensions

29) Vendor/Supplier Proposal:
The vendor/supplier shall include in their firm-fixed price response to this solicitation at a minimum the following information:

- Technical description of proposed Chiller
- Specifications of proposed Chiller to be furnished
- Chiller operation and controls description
- Fabrication and Delivery schedule
- Shipping/transportation costs
- Listing of Vendor supplied Deliverables
- Any exceptions to the above government requirements as listed above in this procurement document (see items 1 – 28)

30) Government Technical Point of Contact:

David Koci
NASA Glenn Research Center
21000 Brookpark Rd. MS 86-12
Cleveland, OH 44135
(216) 433-9064
f.d.koci@nasa.gov

Fig. 1 : Chiller block flow diagram – IGODU LH2

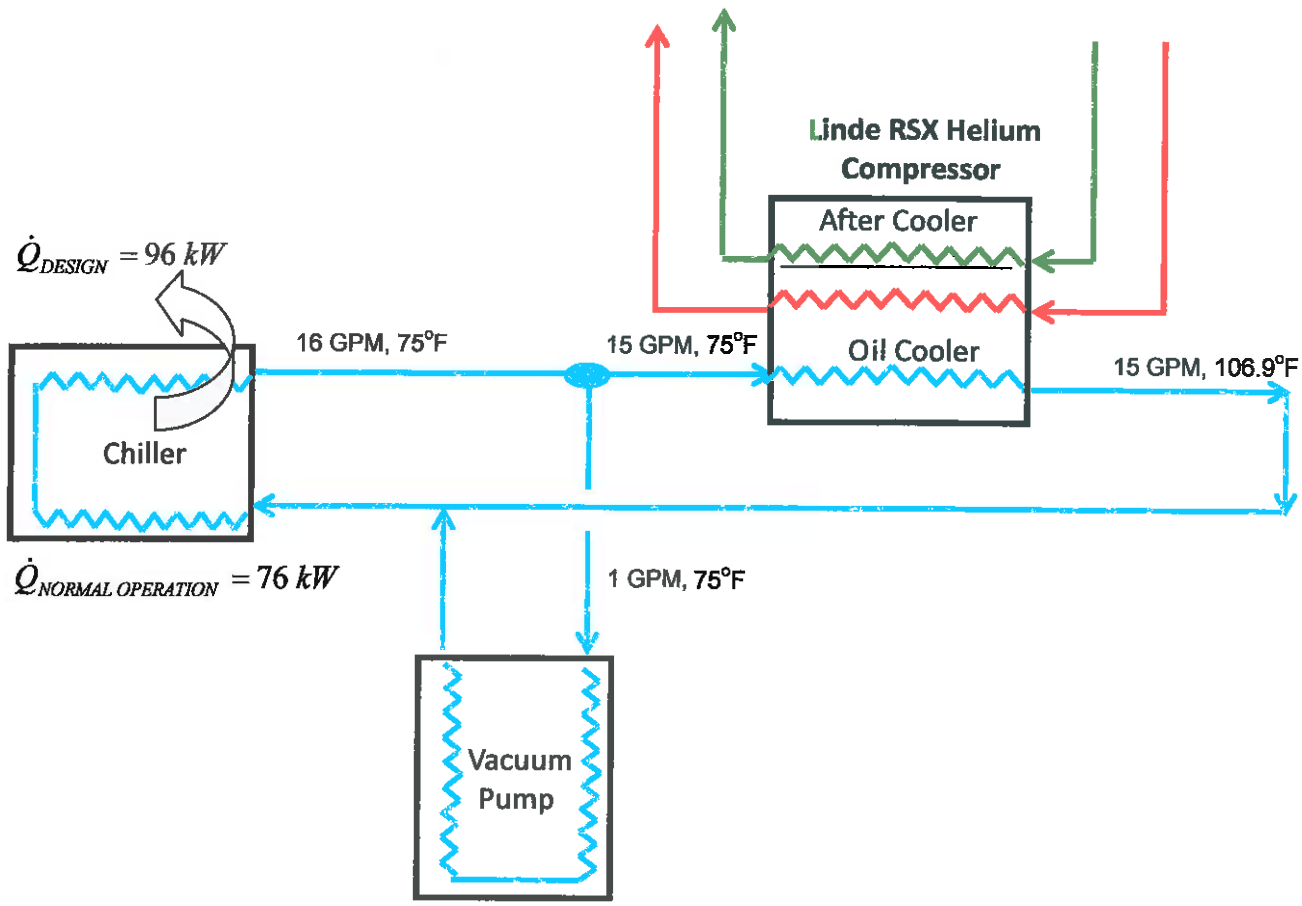

KSC Integrated Ground Operations Demonstration Unit (cont'd)
Recirculating Process Chiller Requirements Specification

Chiller Instrumentation & Analog Controls provided by NASA KSC (field-installed):

Digital Flow Meter:	Mounted on coolant discharge line w/ one (1) analog output to monitor coolant flow. Include low flow alarm w/warning signals signifying a circulating pump failure.
Chiller Power Starter:	Solid-state relay magnetic contactor w/local Chiller Run Light
Pump Motor Starter:	Solid-state relay magnetic contactor w/local Pump Run Light
Local Dial Pressure Gauge:	Coolant discharge pressure.
PLC Interface:	The Chiller Control Unit will interface with the IGODU LH2 Refrigeration Unit PLC (provided by NASA) in order to enable a Safe Shutdown of the Chiller/Pump main power under either emergency or process related upset conditions. The conditions and actions required by the PLC are TBD.