NNL12445245Q
Statement of Work
Version: 27 July 2012

Project Description:

The Langley Research Center (LaRC) is managing the Stratospheric Aerosol and Gas Experiment (SAGE) III on International Space Station (ISS) Project (herein designated as "the Project"). The primary objective of SAGE III on ISS is to monitor the vertical distribution of aerosols, ozone, and other trace gases in Earth's stratosphere and troposphere to enhance our understanding of ozone recovery and climate change processes in the upper atmosphere. SAGE III on ISS will provide data necessary to assess the state of the recovery in the distribution of ozone, extend the SAGE III aerosol measurement record that is needed by both climate models and ozone models, and gain further insight into key processes contributing to ozone and aerosol variability. The SAGE III on ISS Instrument consists of two distinct payloads. The Instrument Payload (IP) contains the SAGE III instrument and its support components integrated to an ISS compatible interface structure called an ExPRESS Pallet Adapter (ExPA). The IP is illustrated in Figure 1.

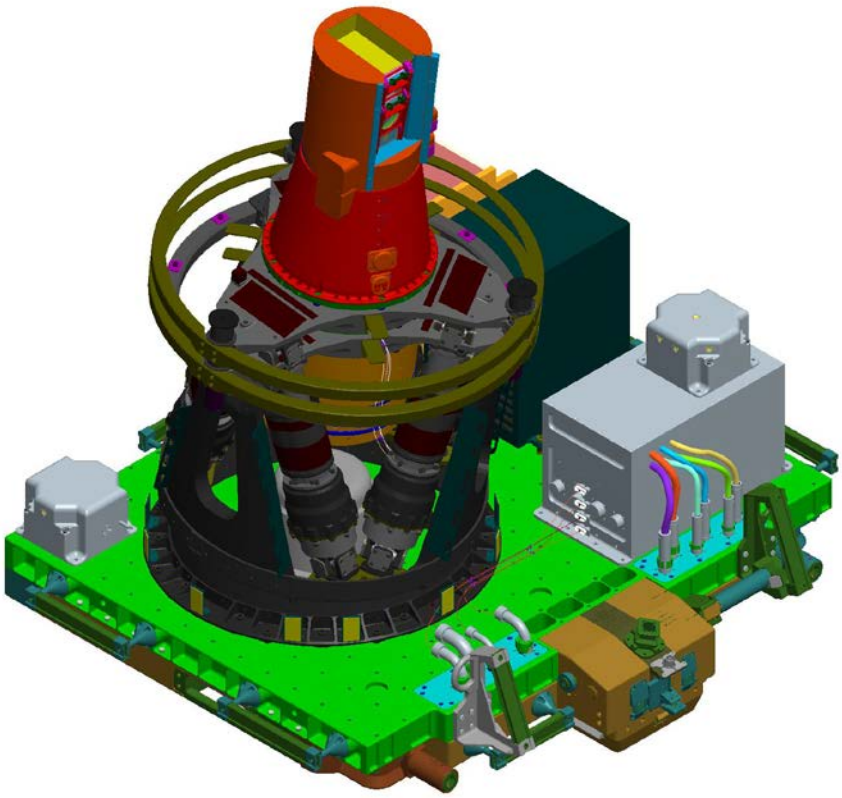

Figure 1 – SAGE III on ISS Instrument Payload (IP)

The Nadir Viewing Platform (NVP) consists of an ExPA integrated with a truss structure allowing the IP to obtain a nadir view of the Earth from the ISS. The NVP is illustrated in Figure 2.

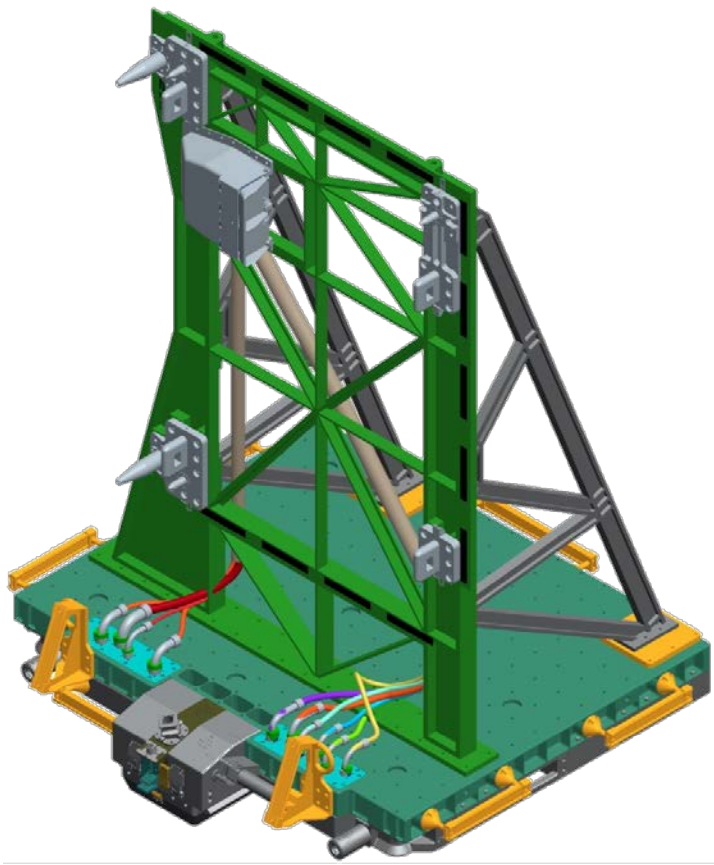

Figure 2 – SAGE III on ISS Nadir Viewing Platform (NVP)

The fully integrated SAGE III on ISS Instrument is illustrated in Figure 3.

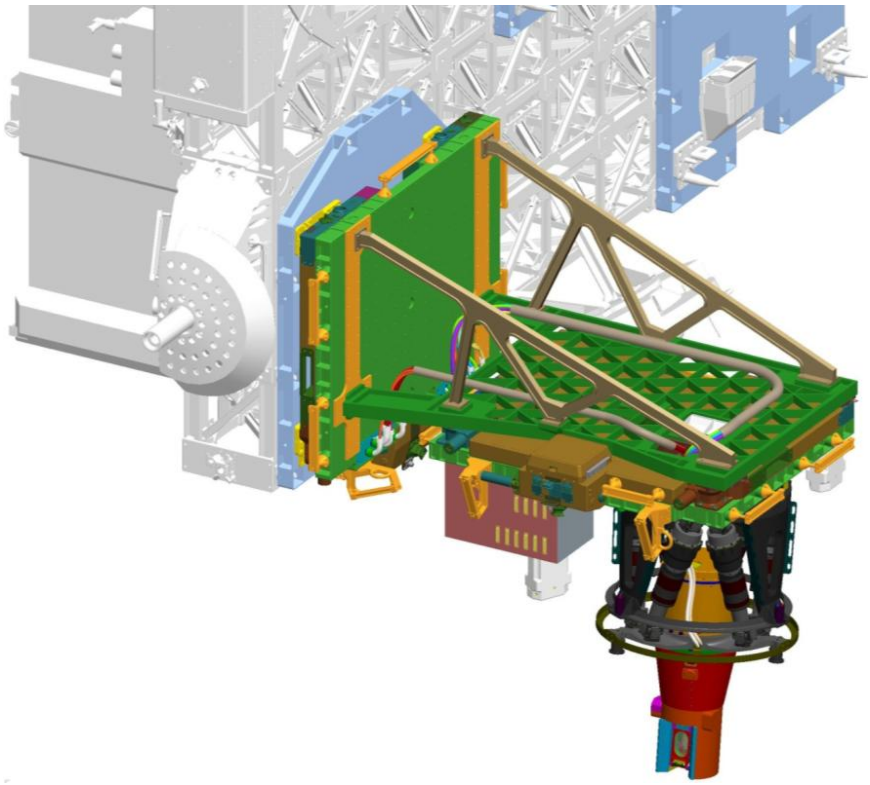

Figure 3 – SAGE III on ISS Instrument

Each of the SAGE III on ISS payloads (IP and NVP) requires its own shipping container. These shipping containers will not only be used to ship the IP and NVP between National Aeronautics and Space Administration (NASA) field centers, but they will be used to transport the IP and NVP between testing facilities at a single NASA field center. The offerer will design, fabricate and deliver the shipping containers as required by this Statement of Work (SOW).

Deliverables:

1) The SAGE III on ISS Shipping Containers shall consist of two distinct units. These units constitute the deliverables for this Statement of Work:

    a. The Instrument Payload (IP) Shipping Container, and
    b. The Nadir Viewing Platform (NVP) Shipping Container.

Instrument Payload (IP) Shipping Container Requirements:

1) The base of the IP Shipping Container shall be designed with metallic structural material and certified per ***NPR 6000.1H***, "Requirements for Packaging, Handling, and Transportation for Aeronautical and Space Systems, Equipment, and Associated Components," to a load of 1000 lb_f with a factor of safety of 2.0 based on the minimum yield strength of the metallic structural material.

2) The base of the IP Shipping Container shall be designed to allow lifting by forklift from all four sides.

3) The base of the IP Shipping Container shall be designed with a Shock Isolation Subsystem (SIS).

4) The Shock Isolation Subsystem (SIS) shall interface with the IP mounting surface through an IP-SIS interface plate.

5) The IP-SIS interface plate shall accommodate the mounting configuration of the IP which consist of Teflon pads aligned with the corners of the ExPA/Passive Flight Releasable Attachment Mechanism (PFRAM) Assembly and hold-down bracket to secure the IP to the IP-SIS interface plate.

6) The IP-SIS interface plate shall accommodate all extrusions and protuberances that exist at the IP / IP-SIS interface plate interface plane.

7) The IP Shipping Container shock isolation subsystem shall be designed with a nominal 3.0-inch border clearance around the envelope of the IP to integrate a contamination protection enclosure.

8) The base of the IP Shipping Container shall be designed to provide transportation tie-down points as defined by ***NPR 6000.1H***, "Requirements for Packaging, Handling, and Transportation for Aeronautical and Space Systems, Equipment, and Associated Components."

9) The base of the IP Shipping Container shall be designed with medium-heavy duty casters:

    a. These casters shall be designed and certified per ***NPR 6000.1H***, "Requirements for Packaging, Handling, and Transportation for Aeronautical and Space Systems, Equipment, and Associated Components," to a load of 1000 lb_f plus the weight of the IP Shipping Container with a factor of safety of 2.0 on ultimate.
    b. These casters shall be designed to be Cleanroom compatible per ***ISO 14644-1 (1999-05-01)***, "Cleanrooms and Associated Controlled Environments – Part 1: Classification of Air Cleanliness" and ***ISO 14644-2 (2000-09-15)***, "Cleanrooms and Associated Controlled Environments – Part 2: Specifications for Testing and Monitoring to Prove Continued Compliance with ISO 14644-1."
    c. These casters shall be designed with brakes.
    d. These casters shall be removable from the IP Shipping Container without opening the container and without violating the pressurization of the container.

10) The interior of the IP Shipping Container shall be designed to eliminate and/or mitigate contamination including, but not limited to, using low outgassing and non-shedding materials, enclosing moving parts to prevent particulate release into the environment surrounding the IP, and using labyrinth seals to isolate lubricated surfaces.

11) The interior of the IP Shipping Container shall be designed to be compatible with ISO Class 7 cleanroom cleanliness as defined in ***ISO 14644-1 (1999-05-01)***, "Cleanrooms and Associated Controlled Environments – Part 1: Classification of Air Cleanliness":

    a. No cadmium, zinc plating or tin plating (unless it is re-flowed) shall be used in the fabrication of the IP Shipping Container.

    b. No polyvinyl chloride (PVC) or silicon sealants shall be used in the fabrication of the IP Shipping Container.

    c. No highly volatile compounds (lubricants, greases, cutting fluids) shall be used in the fabrication of the IP Shipping Container without prior approval from the Project.

12) The interior of the IP Shipping Container shall be capable of being cleaned to a level 300A/2 or better per ***IEST-STD-CC1246D***, "Product Cleanliness Levels and Contamination Control Programs."

13) The fabrication of the IP Shipping Container shall be controlled by inspection, cleaning, and access requirements defined and coordinated by the Project.

14) The induced contamination resulting from the fabrication of the IP Shipping Container shall be removed as generated.

15) The materials used for cleaning the IP Shipping Container shall be approved by a Project representative for compatibility with facility safety requirements and IP materials and mechanisms.

16) The IP Shipping Container cover shall be fabricated in two (2) segments with the parting plane parallel to the ground. These segments shall be designated as the IP Shipping Container Upper Cover (UC) and the IP Shipping Container Middle Cover (MC). The two (2) cover segments integrated as a unit shall be designated as the IP Shipping Container Cover.

17) The plane that contains the interface between the IP Shipping Container Cover and the IP Shipping Container Base (the "sill") shall be below the plane that contains the lower surface of the IP-SIS interface plate.

18) The IP Shipping Container UC shall have an inside height dimension of 30.0 +/- 1.0 inches and the IP Shipping Container MC shall have an inside height dimension that satisfies this SOW. The remaining spatial dimensions of the IP Shipping Container cover segments shall satisfy this SOW.

19) The IP Shipping Container Cover segments (UC and MC) shall be designed to be independently removable either by overhead crane or forklift boom.

20) The IP Shipping Container Cover shall be designed to be removable either by overhead crane or forklift boom.

21) The IP Shipping Container Cover and the IP Shipping Container Cover segments (UC and MC) shall be designed with passive alignment systems that consist of externally-mounted removable guide posts and corresponding externally-mounted guide rings to aid in integration and de-integration of the IP Shipping Container Cover sub-components.

22) The fully integrated IP Shipping Container shall be designed to be Cleanroom compatible per ***ISO 14644-1 (1999-05-01)***, "Cleanrooms and Associated Controlled Environments - Part 1: Classification of Air Cleanliness" and ISO ***14644-2 (2000-09-15)***, "Cleanrooms and Associated Controlled Environments - Part 2: Specifications for Testing and Monitoring to Prove Continued Compliance with ISO 14644-1."

23) The IP Shipping Container shall be designed with a gaseous nitrogen purge capability.

24) The IP Shipping Container shall be designed with a pressure relief valve integrated with an in-line desiccant filter.

25) The IP Shipping Container shall be prepared for leak testing by removing all venting devices and inserting pressurizing fittings. After the IP Shipping Container has been closed and sealed per its operational procedures, the pneumatic pressure technique shall be used per Test Method 5009 of ***MIL-STD-3010B***, "Test Procedures for Packaging Materials," to detect leakage. An initial pressure setting of .50 psig shall be used for 1 hour. After stabilization, the pressure shall be monitored with particular attention given to the sealing flanges and weld areas. A permanent deformation of the container greater than .75-inch shall be classified as certification failure.

26) The IP Shipping Container shall be designed with interfaces for environmental data monitors both inside and outside the IP Shipping Container:

    a. These environmental data monitors shall record humidity, pressure, temperature, vibration and acceleration.

b. These environmental data monitors shall record particle fallout and contain optical contamination witness plates.

27) The IP Shipping Container shall be designed with grounding lugs on all sides both inside and outside the IP Shipping Container.

28) The IP Shipping Container shall be designed to accommodate a contamination control bag around the fully integrated IP.

29) The IP Shipping Container shall be designed to meet ground transportation (truck) load requirements as defined in Table 1.

30) The IP Shipping Container shall maintain all pressure seals during and following ground transportation without separate tie-down locations integrated into the IP Shipping Container Cover.

31) The IP Shipping Container shall be designed with the following physical dimensions. These dimensions define the volumetric requirement for the IP exclusive of other components within the IP Shipping Container including, but not limited to, the SIS, the contamination protection enclosure, and the environmental data monitors:

a. Inside Length = 63.0 +/-1.0 inches;
b. Inside Width = 58.0 +/-1.0 inches;
c. Inside Height = 72.0 +/-1.0 inches.

32) The IP Shipping Container shall be designed with a removable and storable tow-bar.

Data Source / Description		Nx (g)	Ny (g)	Nz (g)	Rx (rad/sec2)	Ry (rad/sec2)	Rz (rad/sec2)
General Ground Handling and Transportation	Truck Road (I) Transportation	+/-3.5	+/-2.0	+1.5/ -3.5	N/A	N/A	N/A
	Barge/Water Transportation (I)	+/-5.0	+/-2.5	-2.5	N/A	N/A	N/A
	Dolly/Land (I)	+/- 1.0	+/- 0.75	-2	N/A	N/A	N/A
	Air Freight (I)	+/- 3.5	+/- 3.5	-3.5	N/A	N/A	N/A
	Fork Lifting (S)	+/- 1.0	+/- 0.5	-2	N/A	N/A	N/A
	Hoisting (I)	0	0	-1.5	N/A	N/A	N/A

Table 1 – Transportation Load Requirements for the IP Shipping Container

Nadir Viewing Platform (NVP) Shipping Container Requirements:

1) The base of the NVP Shipping Container shall be designed with metallic structural material and certified per ***NPR 6000.1H***, "Requirements for Packaging, Handling, and Transportation for Aeronautical and Space Systems, Equipment, and Associated Components," to a load of 750 lb_f with a factor of safety of 2.0 based on the minimum yield strength of the metallic structural material.

2) The base of the NVP Shipping Container shall be designed to allow lifting by forklift from all four sides.

3) The base of the NVP Shipping Container shall be designed with a Shock Isolation Subsystem (SIS).

4) The Shock Isolation Subsystem (SIS) shall interface with the NVP mounting surface through an NVP-SIS interface plate.

5) The NVP-SIS interface plate shall accommodate the mounting configuration of the NVP which consist of Teflon pads aligned with the corners of the ExPA/Passive Flight Releasable Attachment Mechanism (PFRAM) Assembly and hold-down bracket to secure the NVP to the NVP-SIS interface plate.

6) The NVP-SIS interface plate shall accommodate all extrusions and protuberances that exist at the NVP / NVP-SIS interface plate interface plane.

7) The NVP Shipping Container shock isolation subsystem shall be designed with a nominal 3.0-inch border clearance around the envelope of the NVP to integrate a contamination protection enclosure.

8) The base of the NVP Shipping Container shall be designed to provide transportation tie-down points as defined by ***NPR 6000.1H***, "Requirements for Packaging, Handling, and Transportation for Aeronautical and Space Systems, Equipment, and Associated Components."

9) The base of the NVP Shipping Container shall be designed with medium-heavy duty casters:

    a. These casters shall be designed and certified per ***NPR 6000.1H***, "Requirements for Packaging, Handling, and Transportation for Aeronautical and Space Systems, Equipment, and Associated Components," to a load of 750 lb_f plus the weight of the NVP Shipping Container with a factor of safety of 2.0 on ultimate.
    b. These casters shall be designed to be Cleanroom compatible per ***ISO 14644-1 (1999-05-01)***, "Cleanrooms and Associated Controlled Environments – Part 1: Classification of Air Cleanliness" and ***ISO 14644-2 (2000-09-15)***, "Cleanrooms and Associated Controlled Environments – Part 2: Specifications for Testing and Monitoring to Prove Continued Compliance with ISO 14644-1."
    c. These casters shall be designed with brakes.
    d. These casters shall be removable from the NVP Shipping Container without opening the container and without violating the pressurization of the container.

10) The interior of the NVP Shipping Container shall be designed to eliminate and/or mitigate contamination including, but not limited to, using low outgassing and non-shedding materials, enclosing moving parts to prevent particulate release into the environment surrounding the NVP, and using labyrinth seals to isolate lubricated surfaces.

11) The interior of the NVP Shipping Container shall be designed to be compatible with ISO Class 7 cleanroom cleanliness as defined in ***ISO 14644-1 (1999-05-01)***, "Cleanrooms and Associated Controlled Environments – Part 1: Classification of Air Cleanliness":

    a. No cadmium, zinc plating or tin plating (unless it is re-flowed) shall be used in the fabrication of the NVP Shipping Container.

    b. No polyvinyl chloride (PVC) or silicon sealants shall be used in the fabrication of the NVP Shipping Container.

    c. No highly volatile compounds (lubricants, greases, cutting fluids) shall be used in the fabrication of the NVP Shipping Container without prior approval from the Project.

12) The interior of the NVP Shipping Container shall be capable of being cleaned to a level 300A/2 or better per ***IEST-STD-CC1246D***, "Product Cleanliness Levels and Contamination Control Programs."

13) The fabrication of the NVP Shipping Container shall be controlled by inspection, cleaning, and access requirements defined and coordinated by the Project.

14) The induced contamination resulting from the fabrication of the NVP Shipping Container shall be removed as generated.

15) The materials used for cleaning the NVP Shipping Container shall be approved by a Project representative for compatibility with facility safety requirements and IP materials and mechanisms.

16) The NVP Shipping Container cover shall be fabricated in two (2) segments with the parting plane parallel to the ground. These segments shall be designated as the NVP Shipping Container Upper Cover (UC) and the NVP Shipping Container Middle Cover (MC). The two (2) cover segments integrated as a unit shall be designated as the NVP Shipping Container Cover.

17) The plane that contains the interface between the NVP Shipping Container Cover and the NVP Shipping Container Base (the "sill") shall be below the plane that contains the lower surface of the NVP-SIS interface plate.

18) The NVP Shipping Container UC shall have an inside height dimension of 30.0 +/-1.0 inches and the NVP Shipping Container MC shall have an inside height dimension that satisfies this SOW. The remaining spatial dimensions of the NVP Shipping Container cover segments shall satisfy this SOW.

19) The NVP Shipping Container Cover segments (UC and MC) shall be designed to be independently removable either by overhead crane or forklift boom.

20) The NVP Shipping Container Cover shall be designed to be removable either by overhead crane or forklift boom.

21) The NVP Shipping Container Cover and the NVP Shipping Container Cover segments (UC and MC) shall be designed with passive alignment systems that consist of externally-mounted removable guide posts and corresponding externally-mounted guide rings to aid in integration and de-integration of the NVP Shipping Container Cover sub-components.

22) The fully integrated NVP Shipping Container shall be designed to be Cleanroom compatible per ***ISO 14644-1(1999-05-01)***, "Cleanrooms and Associated Controlled Environments - Part 1: Classification of Air Cleanliness" and ***ISO 14644-2 (2000-09-15)***, "Cleanrooms and Associated Controlled Environments - Part 2: Specifications for Testing and Monitoring to Prove Continued Compliance with ISO 14644-1."

23) The NVP Shipping Container shall be designed with a gaseous nitrogen purge capability.

24) The NVP Shipping Container shall be designed with a pressure relief valve integrated with an in-line desiccant filter.

25) The NVP Shipping Container shall be prepared for leak testing by removing all venting devices and inserting pressurizing fittings. After the NVP Shipping Container has been closed and sealed per its operational procedures, the pneumatic pressure technique shall be used per Test Method 5009 of ***MIL-STD-3010B***, "Test Procedures for Packaging Materials," to detect leakage. An initial pressure setting of .50 psig shall be used for 1 hour. After stabilization, the pressure shall be monitored with particular attention given to the sealing flanges and weld areas. A permanent deformation of the container greater than .75-inch shall be classified as certification failure.

26) The NVP Shipping Container shall be designed with interfaces for environmental data monitors both inside and outside the NVP Shipping Container:

    a. These environmental data monitors shall record humidity, pressure, temperature, vibration and acceleration.

b. These environmental data monitors shall record particle fallout and contain optical contamination witness plates.

27) The NVP Shipping Container shall be designed with grounding lugs on all sides both inside and outside the NVP Shipping Container.

28) The NVP Shipping Container shall be designed to accommodate a contamination control bag around the fully integrated NVP.

29) The NVP Shipping Container shall be designed to meet ground transportation (truck) load requirements as defined in Table 2.

30) The NVP Shipping Container shall maintain all pressure seals during and following ground transportation without separate tie-down locations integrated into the IP Shipping Container Cover.

31) The NVP Shipping Container shall be designed with the following physical dimensions. These dimensions define the volumetric requirement for the NVP exclusive of other components within the NVP Shipping Container including, but not limited to, the SIS, the contamination protection enclosure, and the environmental data monitors:

a. Inside Length = 63.0 +/-1.0 inches;
b. Inside Width = 58.0 +/-1.0 inches;
c. Inside Height = 72.0 +/-1.0 inches.

32) The NVP Shipping Container shall be designed with a removable and storable tow-bar.

Data Source / Description		Nx (g)	Ny (g)	Nz (g)	Rx (rad/sec2)	Ry (rad/sec2)	Rz (rad/sec2)
General Ground Handling and Transportation	Truck Road (I) Transportation	+/-3.5	+/-2.0	+1.5/ -3.5	N/A	N/A	N/A
	Barge/Water Transportation (I)	+/-5.0	+/-2.5	-2.5	N/A	N/A	N/A
	Dolly/Land (I)	+/- 1.0	+/- 0.75	-2	N/A	N/A	N/A
	Air Freight (I)	+/- 3.5	+/- 3.5	-3.5	N/A	N/A	N/A
	Fork Lifting (S)	+/- 1.0	+/- 0.5	-2	N/A	N/A	N/A
	Hoisting (I)	0	0	-1.5	N/A	N/A	N/A

Table 2 – Transportation Load Requirements for the NVP Shipping Container

Schedule of Milestones and Deliverables:

An abbreviated Milestone and Deliverable Schedule for this SOW is defined in Table 3. The abbreviation ARO represents the phrase, "After receipt of order/award."

Milestone	***Deliverable***	***Date***
Design and schedule review conference call	Design, proposed schedule and QA plans electronically prior to conference call	5 days ARO
Design Reports	Conference Calls	Bi-Weekly
Final Design and Schedule review conference call	Files Electronically	45 days ARO
Fabrication Reports	Conference Calls	Bi-Weekly
Pre-Delivery Inspection of NVP Shipping Containers	On-Site inspection	180 days ARO
Delivery of NVP Shipping Containers	NVP Shipping Container	200 days ARO
Pre-Delivery Inspection of IP Shipping Container	On-Site inspection	210 days ARO
Delivery of IP Shipping Container	NVP Shipping Container	225 days ARO
Fabrication Complete	Shipping Containers and quality documentation	240 days ARO

Table 3 – SAGE III on ISS Shipping Containers Milestone and Deliverable Schedule