NEXT ASSY						ITEMS LIST				REF. DRAWING	
					M-010	ITEM	DESCRIPTION	MATERIAL	NOTE	ITEM	ON DWG. NO.
REQ'D PER ASSY											
				1	X	1	HUB ASSEMBLY				
						2	1A	SHEET- Ø3.50 x 12 GAGE (.1054 NOM) THK	SST 316L, ASME SA240	1	
						1	1B	PIPE- SEAMLESS 3" SCHEDULE 10S x 1.25 LG	SST ASME SA312 TP 316L		
				8		2	TUBE-Ø1.05 x 5.88 LG 3/4" SCH 40 PIPE	SST ASME SA312 TP 316L			
				8		3	COLLAR- Ø1.38 x 1.50 LG	SST 316L, ASME SA479			
				16		4	NOZZLE	SST 316L, ASME SA479			

NOTES:

1. FOR GENERAL NOTES SEE DWG M-010.

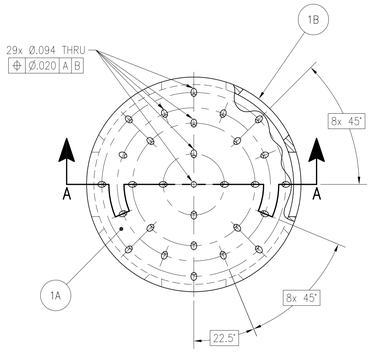

1 HUB ASSEMBLY
SCALE: 1:1

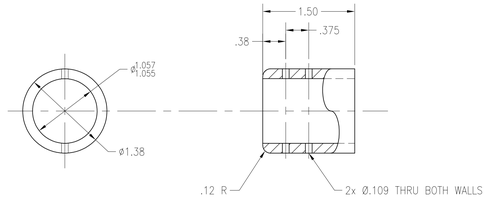

3 COLLAR
SCALE: 1:1

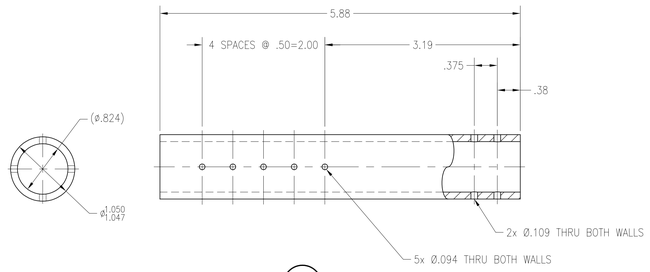

2 TUBE
SCALE: 1:1

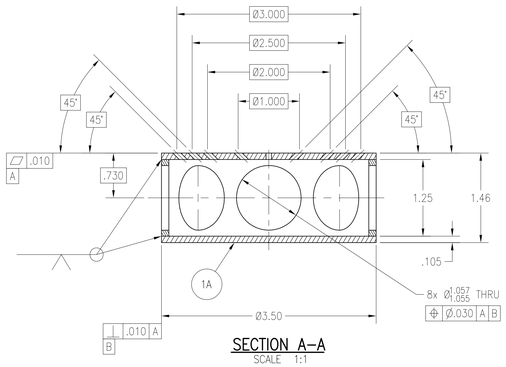

SECTION A-A
SCALE 1:1

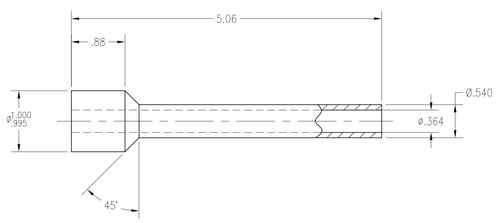

4 NOZZLE
SCALE: 1/1

SYM	ZONE	DESCRIPTION	DATE	APPROVED
A		CHANGED ASTM MAT'L'S DESIGNATIONS TO ASME	03/17/08	J. THORINGTON

REVISIONS

TOLERANCE UNLESS OTHERWISE SPECIFIED
ANGULAR ±0°-30'
FRACTIONS ±1/8
TENTHS ±.1
HUNDREDTHS ±.03
THOUSANDTHS ±.010
125 SURFACE ROUGHNESS MIL-STD-10A

SIGNATURES		DATE
DRAWN	A. LANEY	09/06/07
CHECKED	C. HYSLIP	09/06/07
ENGINEER	C.KASTNER(RMLLC)	09/06/07
ISSUED		
SUBMITTED		
APPROVED		DATE
USED ON		

NATIONAL AERONAUTICS AND SPACE ADMINISTRATION
JOHN C. STENNIS SPACE CENTER
STENNIS SPACE CENTER, MS 39529-6000

JE JACOBS
Jacobs Technology Inc.
Tullahoma, TN 37388

CHEMICAL STEAM GENERATOR
COMBUSTION CHAMBER LINER
DETAILS

REF NO. DWG

CADD CONTROL DRAWING
CADD P/N:
M-012

SIZE	DRAWING NO.	REV.
F	90937-M-012	A

AUTHORITY | SHEET

90937\DRAWINGS\MECH\\M-012.DWG 17-MAR-2008 14:13 JOBETL