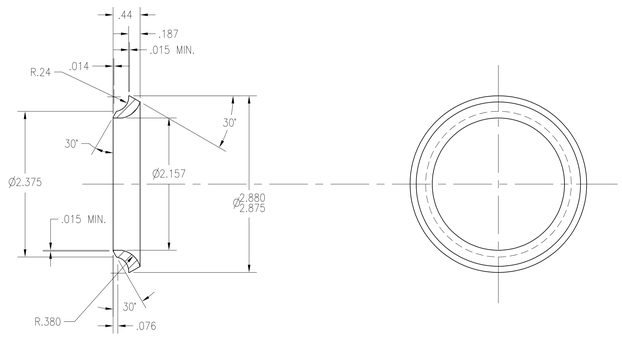

3 COLLAR
SCALE: 1:1

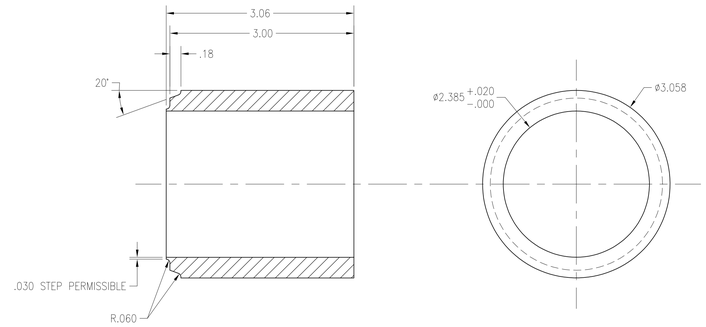

2 SPACER
SCALE: 1:1

NEXT ASSY						ITEMS LIST				REF. DRAWING	
REQ'D PER ASSY					M-015	ITEM	DESCRIPTION	MATERIAL	NOTE	ITEM	ON DWG. NO.
					1	1	PLATE – Ø10.43 x .187	A-NICKEL, ASME SB162			
					1	2	SPACER – Ø3.06 x 3.06	SST 316, ASME SA479			
					1	3	COLLAR – Ø2.875 x .44	SST 316, ASME SA479			

NOTES:

1. FOR GENERAL NOTES, SEE DWG. M-015.

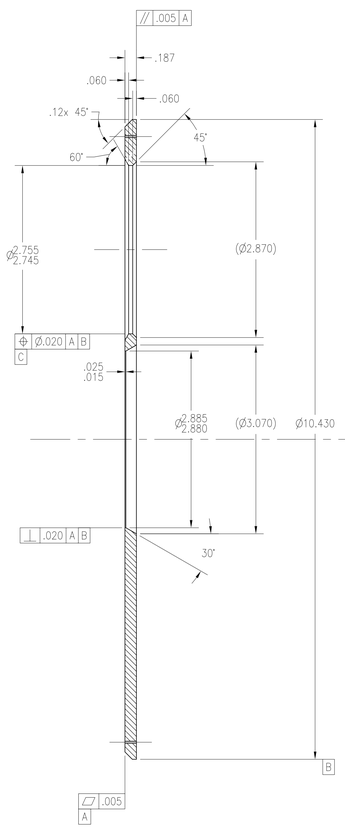

SECTION A-A
SCALE: 1:1

SECT TYP (5 PLACES)

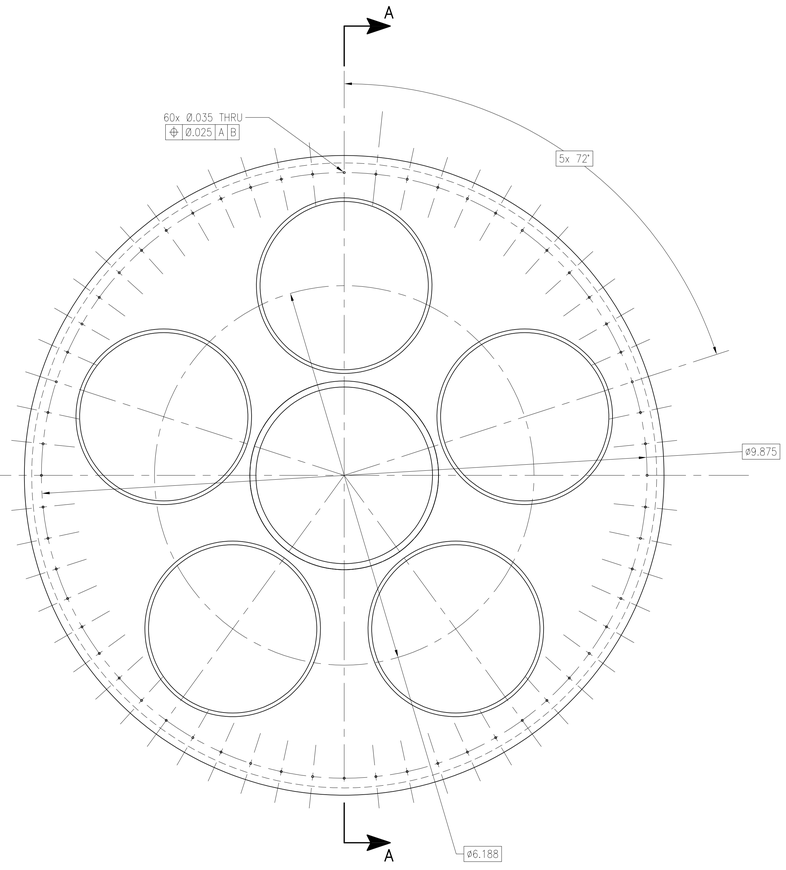

1 PLATE
SCALE: 1:1

TOLERANCE UNLESS OTHERWISE SPECIFIED	
ANGULAR	±0°–30'
FRACTIONS	±1/8
TENTHS	±.1
HUNDREDTHS	±.03
THOUSANDTHS	±.010
125 SURFACE ROUGHNESS MIL-STD-10A	
REF NO.	DWG

SYM	ZONE	DESCRIPTION	DATE	APPROVED
		REVISIONS		

SIGNATURES		DATE
DRAWN	P. WALLER	04/13/12
CHECKED		
ENGINEER	G. P. SAUNDERS	04/13/12
ISSUED		
SUBMITTED		
APPROVED		DATE
USED ON		

NATIONAL AERONAUTICS AND SPACE ADMINISTRATION
JOHN C. STENNIS SPACE CENTER
STENNIS SPACE CENTER, MS 39529-6000

JACOBS
Jacobs Technology Inc.
Tullahoma, TN 37388

CHEMICAL STEAM GENERATOR
MAIN STAGE INJECTOR – MODIFIED
DETAILS

SIZE	DRAWING NO.	REV.
F	SK-M-018	–

AUTHORITY | SHEET

CADD CONTROL DRAWING
CADD P/N:
SK-M-018

WALLERPC

P:\60937\CSG TESTING\MAIN STAGE INJECTOR MODS\SK-M-018.DWG 16-APR-2012 08:11