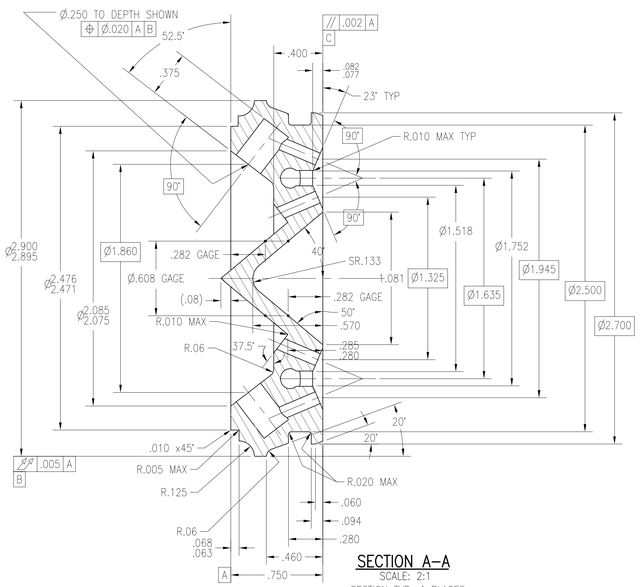

SECTION A–A
SCALE: 2:1
SECTION TYP. 4 PLACES

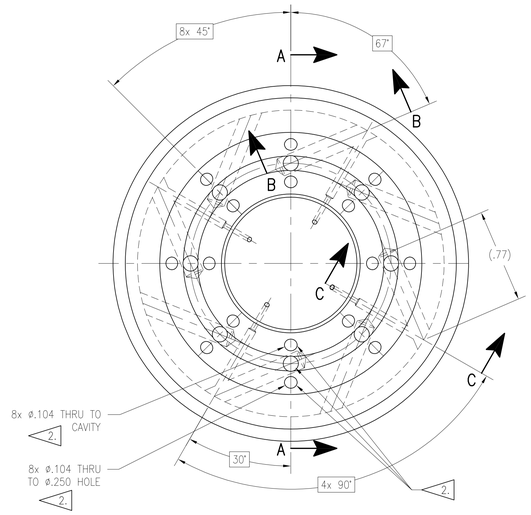

3 SPUD HEAD
SCALE: 2:1

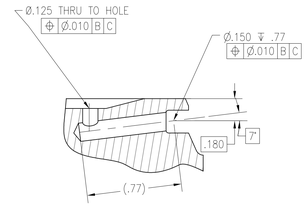

SECTION B–B
SCALE: 2:1
SECTION TYP. 8 PLACES

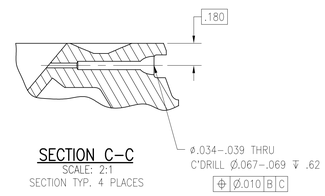

SECTION C–C
SCALE: 2:1
SECTION TYP. 4 PLACES

NEXT ASSY						ITEMS LIST				REF. DRAWING	
					M-015	ITEM	DESCRIPTION	MATERIAL	NOTE	ITEM	ON DWG. NO.
REQ'D PER ASSY											
				5	X	1	SPUD ASSEMBLY				
					1	2	SPUD SHANK– Ø3.0x4.25 LG	SST–321 ASTM A240			
					1	3	SPUD HEAD–03.0 x 1.0	A–NICKLE ASTM B160 –58T			

NOTES:

1. FOR GENERAL NOTES, SEE DWG. M–015.
2. HOLES FORMING AN IMPINGING SET 8 PLACES.

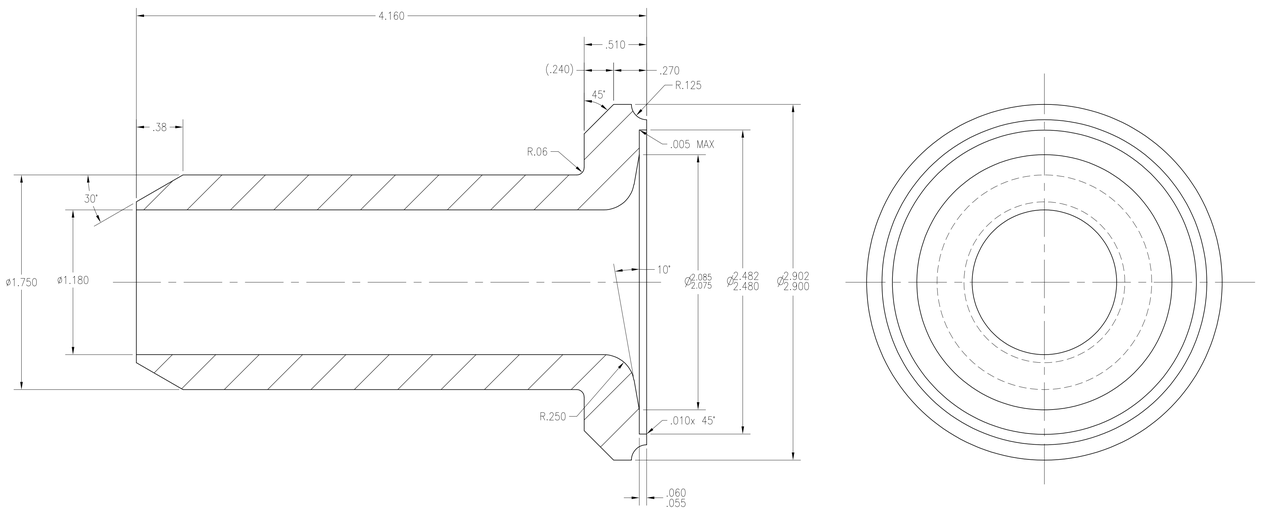

2 SPUD SHANK
SCALE: 2:1

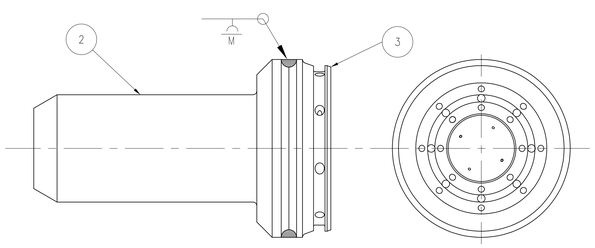

1 SPUD ASSEMBLY
SCALE: 1:1

TOLERANCE UNLESS OTHERWISE SPECIFIED	
ANGULAR	±0°–30'
FRACTIONS	±1/8
TENTHS	±.1
HUNDREDTHS	±.03
THOUSANDTHS	±.010
125 SURFACE ROUGHNESS MIL–STD–10A	

REF NO. DWG

SYM	ZONE	DESCRIPTION	DATE	APPROVED

REVISIONS

SIGNATURES		DATE
DRAWN	P. WALLER	04/13/12
CHECKED		
ENGINEER	G.P. SAUNDERS	04/13/12
ISSUED		
SUBMITTED		
APPROVED		DATE
USED ON		

NATIONAL AERONAUTICS AND SPACE ADMINISTRATION
JOHN C. STENNIS SPACE CENTER
STENNIS SPACE CENTER, MS 39529–6000

JACOBS
Jacobs Technology Inc.
Tullahoma, TN 37388

CHEMICAL STEAM GENERATOR
MAIN STAGE INJECTOR – MODIFIED
DETAILS

CADD CONTROL DRAWING
CADD P/N:
SK–M–017

SIZE F | DRAWING NO. SK–M–017 | REV. –
AUTHORITY | SHEET

P:\00937\CSG TESTING\MAIN STAGE INJECTOR MODS\SK–M–017.DWG 16–APR–2012 08:11 WALLERPC