NEXT ASSY	ITEMS LIST				REF. DRAWING	
REQ'D PER ASSY	ITEM	DESCRIPTION	MATERIAL	NOTE	ITEM	ON DWG. NO.
1		INJECTOR BODY- FORGING	SST 316L ASME SA479 (A)	2.		

M-015

NOTES:

1. FOR GENERAL NOTES SEE DWG. M-015.
2. FORGING TO COMPLY TO UNS 31603, ASTM A965/A965M-02 GRADE F316L.

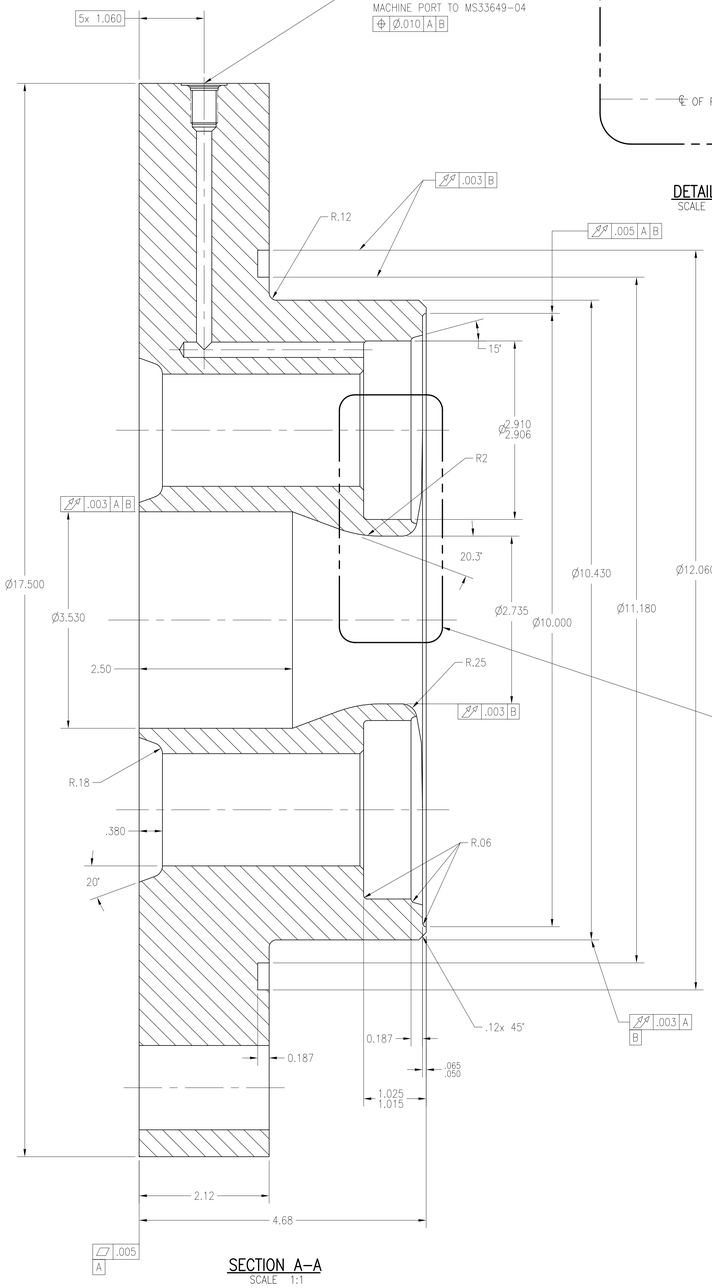

SECTION A-A
SCALE 1:1

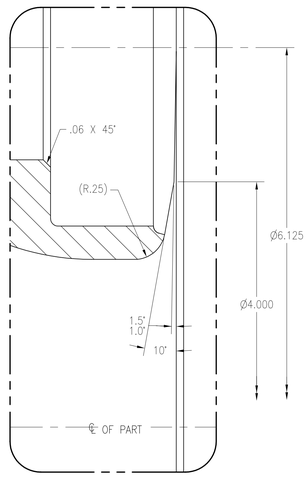

DETAIL 1
SCALE 2:1

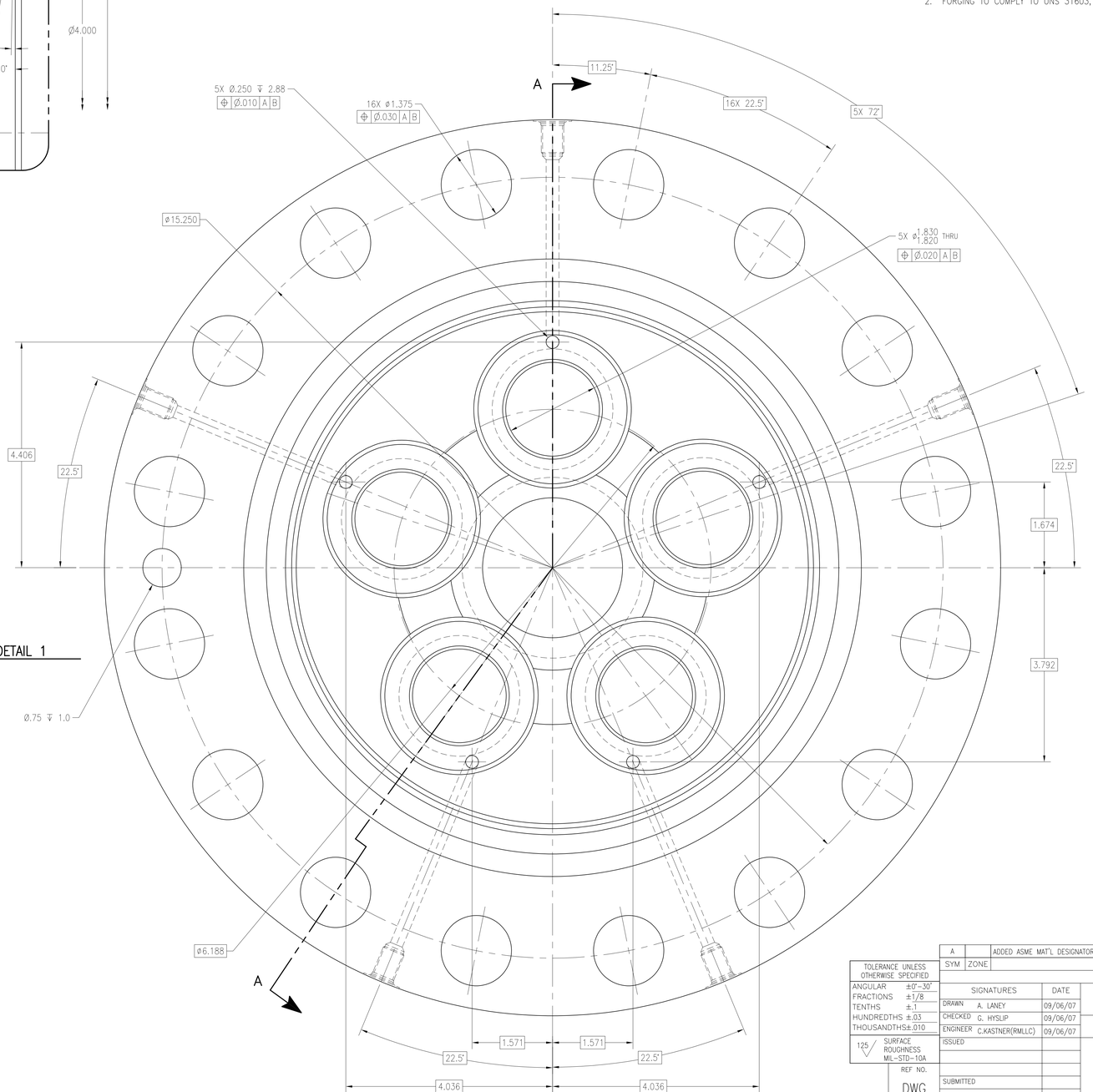

1 INJECTOR BODY
SCALE: 1:1

SYM	ZONE	DESCRIPTION	DATE	APPROVED
A		ADDED ASME MAT'L DESIGNATOR	03/17/08	J. THORINGTON

REVISIONS

TOLERANCE UNLESS OTHERWISE SPECIFIED
ANGULAR ±0°-30'
FRACTIONS ±1/8
TENTHS ±.1
HUNDREDTHS ±.03
THOUSANDTHS ±.010
125 SURFACE ROUGHNESS MIL-STD-10A

SIGNATURES		DATE
DRAWN	A. LANEY	09/06/07
CHECKED	C. HYSLIP	09/06/07
ENGINEER	C.KASTNER(RMLLC)	09/06/07
ISSUED		
SUBMITTED		
APPROVED		DATE
USED ON	WALLERPC	

REF NO. DWG

CADD CONTROL DRAWING
CADD P/N: M-016

P:\90937\CSG TESTING\MAIN STAGE INJECTOR MODS\M-016.DWG 16-APR-2012 08:10

NATIONAL AERONAUTICS AND SPACE ADMINISTRATION
JOHN C. STENNIS SPACE CENTER
STENNIS SPACE CENTER, MS 39529-6000

JACOBS
Jacobs Technology Inc.
Tullahoma, TN 37388

CHEMICAL STEAM GENERATOR
MAIN STAGE INJECTOR
BODY DETAILS

SIZE	DRAWING NO.	REV.
F	90937-M-016	A

AUTHORITY | SHEET