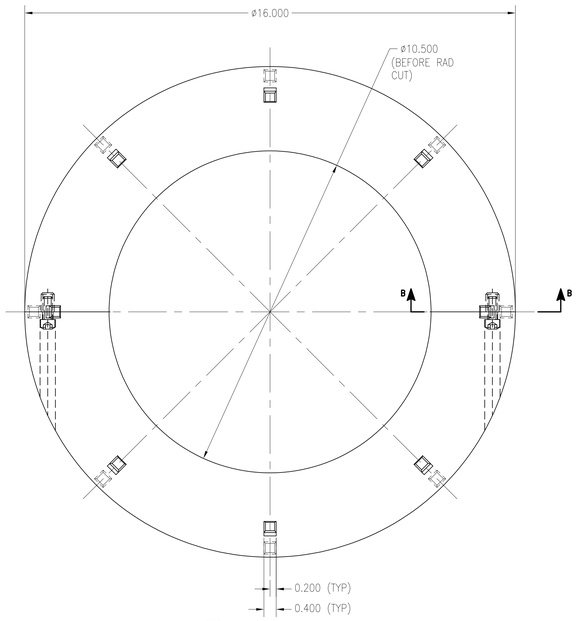

1B RING SET
SCALE: 1:2

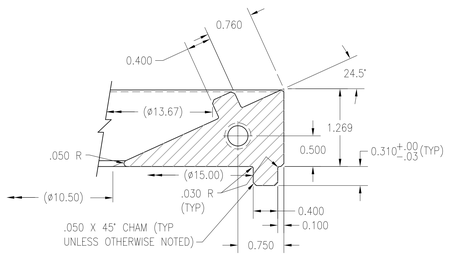

SECTION B–B
SCALE 1:1

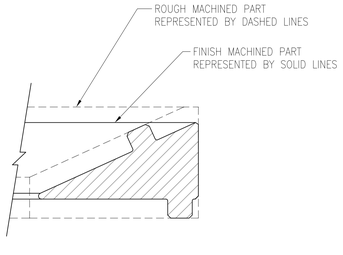

SECTION B–B
SCALE 1:1

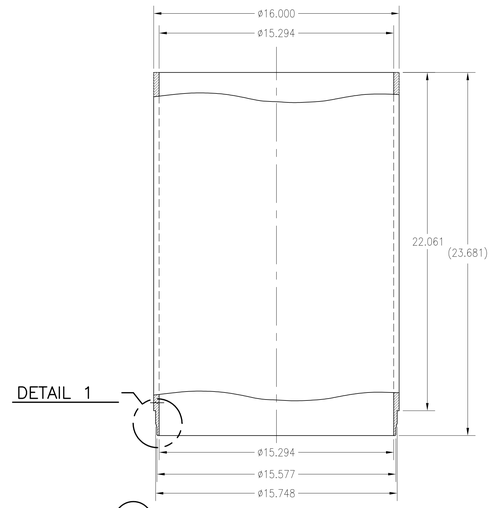

1C LINER MID SECTION FINISH MACHINING
SCALE: 1:4

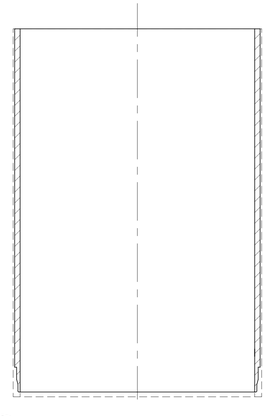

1C LINER MID SECTION FINISH MACHINING
SCALE: 1:4

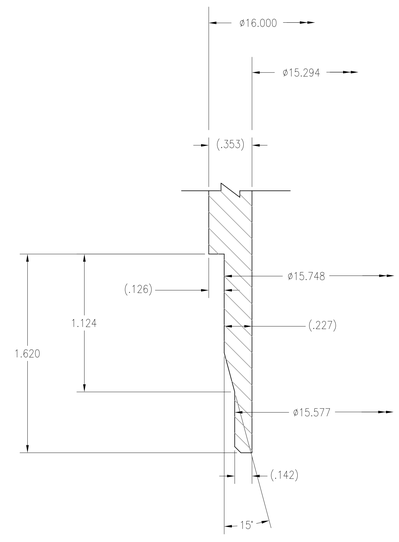

DETAIL 1
SCALE: 2:1

GENERAL NOTES:

1. DIMENSIONING AND TOLERANCING PER ASME Y14.5M–1994.
2. UNLESS OTHERWISE SPECIFIED, ALL DIMENSIONS ARE IN INCHES.
3. UNLESS OTHERWISE INDICATED, ALL MACHINED SURFACES TO BE FLAT, PARALLEL, SQUARE OR CONCENTRIC WITHIN .010" PER FOOT.
4. UNLESS OTHERWISE INDICATED, ALL MACHINED SURFACES TO BE ROUGHNESS GRADE 125 OR BETTER.
5. SIZES GIVEN IN THE ITEMS LIST ARE FINISHED OVERALL. MACHINING AND TRIMMING ALLOWANCES TO BE DETERMINED BY FABRICATOR.
6. DEBURR AND BREAK SHARP EDGES .015–.025" UNLESS OTHERWISE SPECIFIED.
7. UNLESS OTHERWISE SPECIFIED, FILLET RADII SHALL BE MIN. 005 MAX .015"
8. WELDING TO BE IN ACCORDANCE WITH SECTION IX OF THE ASME BOILER AND PRESSURE VESSEL CODE.

TOLERANCE UNLESS OTHERWISE SPECIFIED	
ANGULAR	±0°–30'
FRACTIONS	±1/8
TENTHS	±.1
HUNDREDTHS	±.03
THOUSANDTHS	±.010
125 SURFACE ROUGHNESS MIL–STD–10A	

REF NO.
DWG

CADD CONTROL DRAWING
CADD P/N:
M–008

P:\60937\CSC TESTING\TURBULATOR MODS\M–008_(FINAL MACH AND ASSEMBLY).DWG 12–JUL–2012 13:04

SYM	ZONE	DESCRIPTION	DATE	APPROVED

REVISIONS

SIGNATURES		DATE
DRAWN	G.P. SAUNDERS	
CHECKED		
ENGINEER	G.P. SAUNDERS	
ISSUED		
SUBMITTED		
APPROVED		DATE
USED ON		

WALLERPC

NATIONAL AERONAUTICS AND SPACE ADMINISTRATION
JOHN C. STENNIS SPACE CENTER
STENNIS SPACE CENTER, MS 39529–6000

JACOBS
Jacobs Technology Inc.
Tullahoma, TN 37388

CHEMICAL STEAM GENERATOR
COMBUSTION CHAMBER TURBULATOR LINER
ASSEMBLY
DETAILS

SIZE	DRAWING NO.	REV.
F	95116–M–008	

AUTHORITY | SHEET