GENERAL NOTES:

1. DIMENSIONING AND TOLERANCING PER ASME Y14.5M–1994.
2. UNLESS OTHERWISE SPECIFIED, ALL DIMENSIONS ARE IN INCHES.
3. UNLESS OTHERWISE INDICATED, ALL MACHINED SURFACES TO BE FLAT, PARALLEL, SQUARE OR CONCENTRIC WITHIN .010" PER FOOT.
4. LINER HEAD, LINER MID SECTION, AND RING SET ARE MANUFACTURED BY SPIN–CAST METHOD. REFER TO DWG. 95116–M–001 FOR FINAL MACHINING REQUIREMENTS AND FABRICATION SEQUENCE.

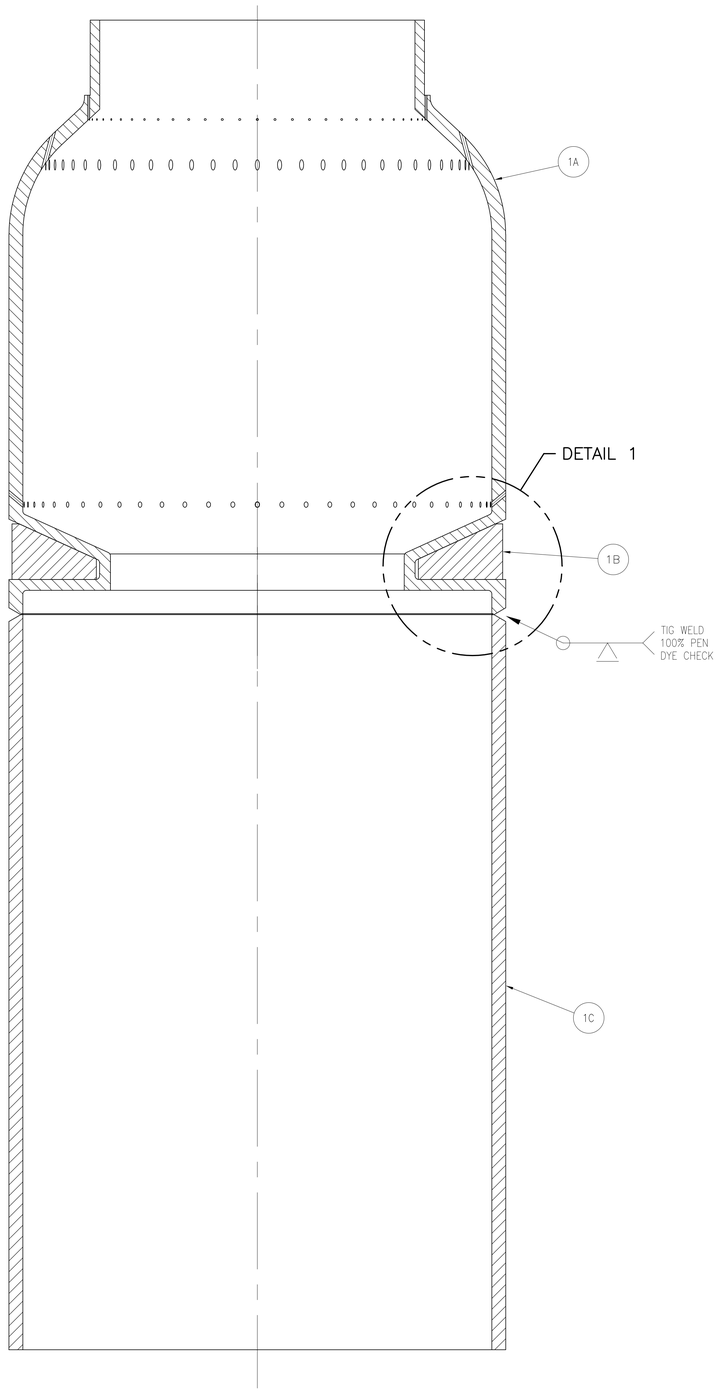

ROUGH MACHINED ASSEMBLY FOR WELDING

SCALE: 1:2

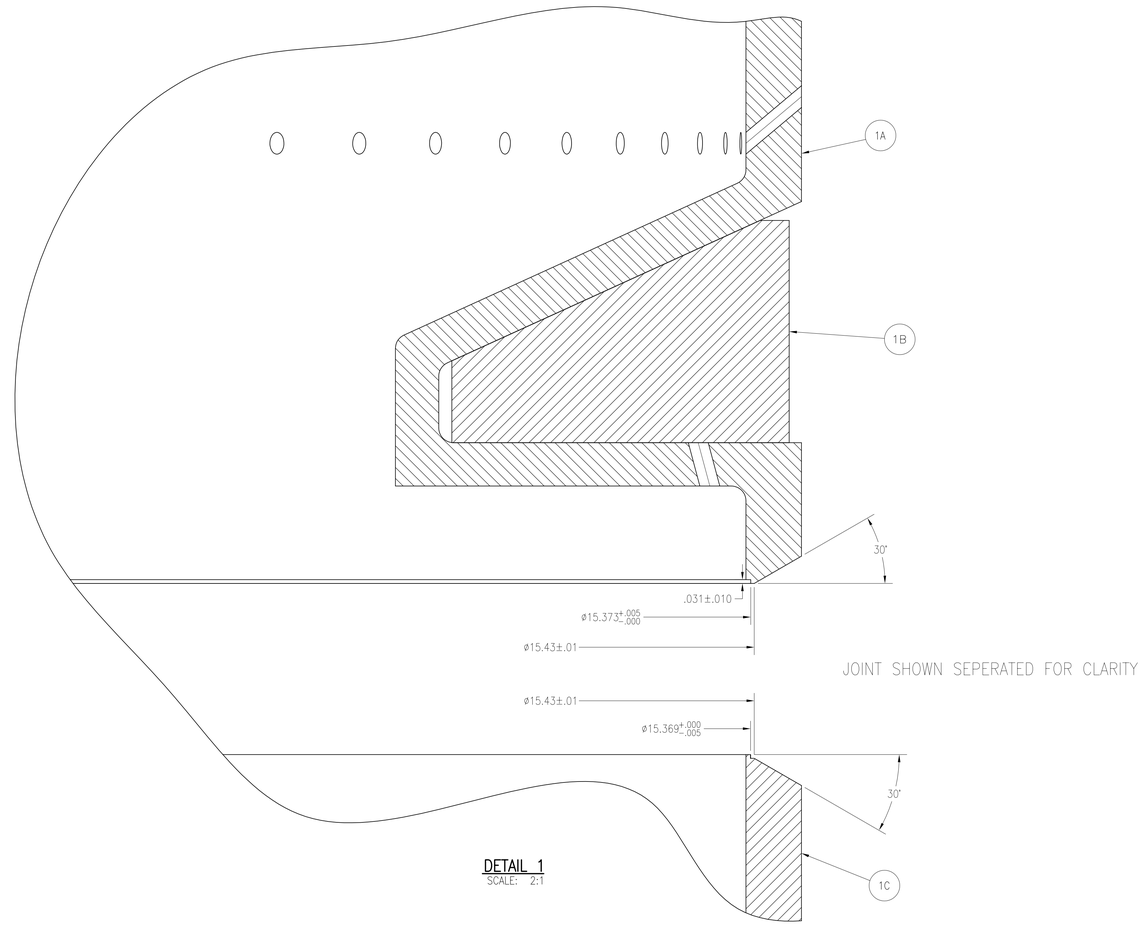

DETAIL 1

SCALE: 2:1

TOLERANCE UNLESS OTHERWISE SPECIFIED	
ANGULAR	±0°–15'
FRACTIONS	±1/8
TENTHS	±.1
HUNDREDTHS	±.03
THOUSANDTHS	±.010
125 SURFACE ROUGHNESS MIL–STD–10A	

REF NO. DWG

CADD CONTROL DRAWING

CADD P/N: M–005

P:\90937\CSG TESTING\TURBULATOR MODS\M–005_ROUGH ASSY.DWG 12–JUL–2012 13:03

SYM	ZONE	DESCRIPTION	DATE	APPROVED

REVISIONS

SIGNATURES		DATE
DRAWN	G.P. SAUNDERS	
CHECKED		
ENGINEER	G.P. SAUNDERS	
ISSUED		
SUBMITTED		
APPROVED		DATE
USED ON		

NATIONAL AERONAUTICS AND SPACE ADMINISTRATION
JOHN C. STENNIS SPACE CENTER
STENNIS SPACE CENTER, MS 39529–6000

JACOBS — Jacobs Technology Inc. Tullahoma, TN 37388

CHEMICAL STEAM GENERATOR
COMBUSTION CHAMBER ASSEMBLY
TURBULATOR MODIFICATIONS
ROUGH ASSY FOR WELDING

SIZE	DRAWING NO.	REV.
B	95116–M–005	–

AUTHORITY | SHEET

WALLERPC