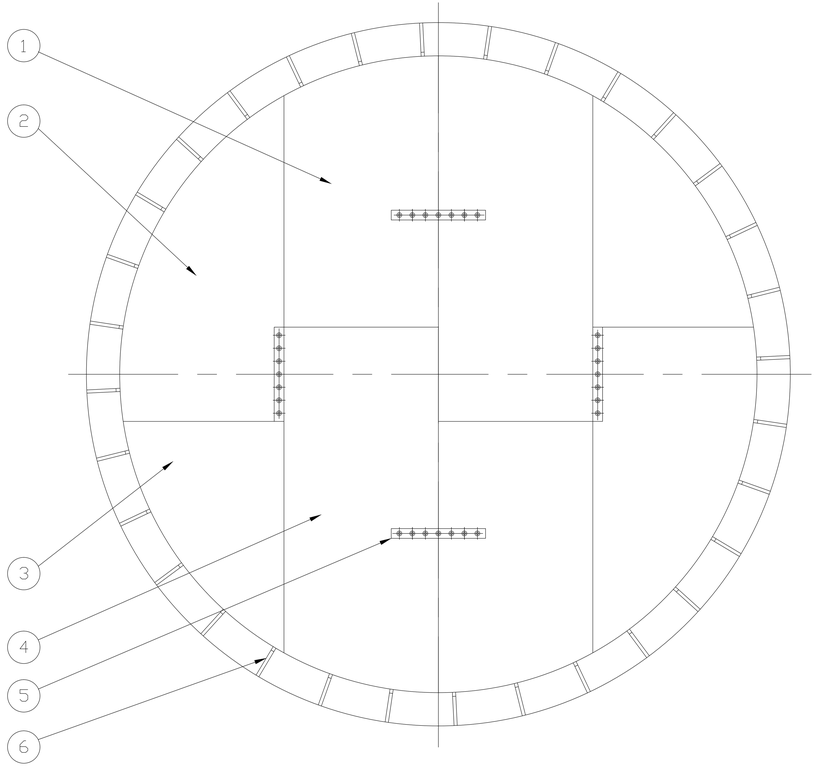

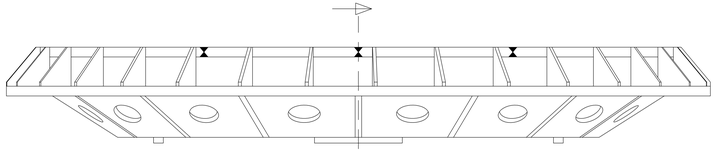

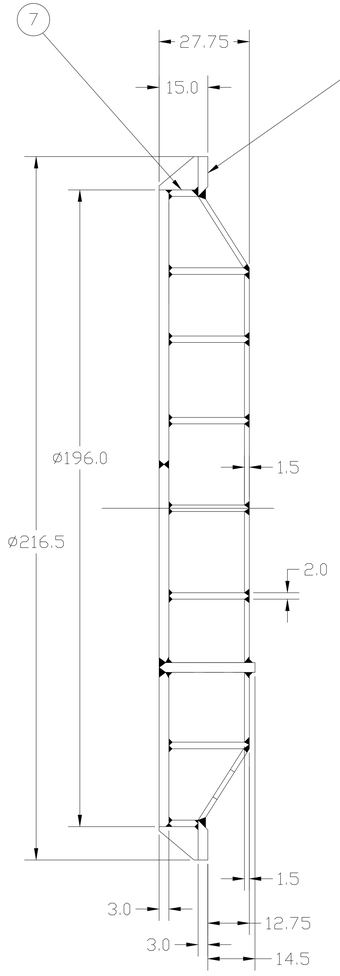

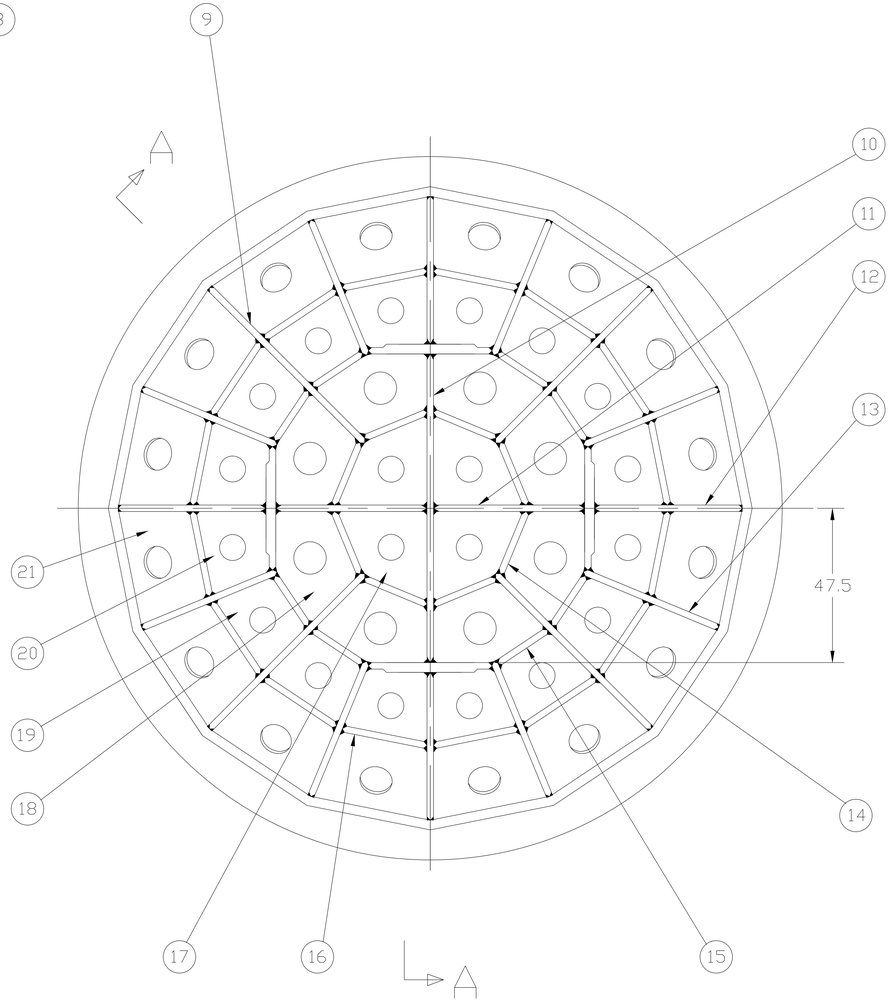

MVF TABLE EXPANDER - WELDMENT
REVISION 8
MATERIAL: 5083-0 OR 5083-H32 ALUMINUM
WELDED CONSTRUCTION PER AWS D1.2
ALL WELDS COMPLETE JOINT PENETRATION
WELD INSPECTIONS: 100% VISUAL ON ALL PASSES,
100% DYE PEN ON FINAL COVER PASSES
WELD FILLER ROD: 5183 ALUMINUM
WELD DOCUMENTATION: PQR'S, WQT'S, WPS'S &
WELD MAPS WITH TRACEBILITY TO INSPECTION REPORTS
STRESS RELIEVE PRIOR TO MACHINING
NASA PLUM BROOK STATION
MICHAEL HENRY, JULY 3, 2012

SIZE	BLDG/SYS	PROJECT ID	DISCP	TYP SEQ
PR	-		-	

DRAWING/DESIGN STATUS:

CHG	NUM	DESCRIPTION	APP/DATE
		REVISIONS	

CAD DRAWING - DO NOT REVISE MANUALLY

PLUM BROOK STATION
8100 COLUMBUS AVENUE
SANDUSKY, OHIO

SYSTEM: | SUB-SYS: | TASK/PT: SPF | CONFIG:
DR: | DES:
CLDNG: | PROJ. MGR:

CONTRACTOR:
CONTRACT NO.:
TASK ORDER:
DRAWN: | DESIGNED: | CHECKED:
APPROVED: | APPROVAL DATE:

RELEASE STATUS:
RELEASE APPROVAL: | DATE:
RELEASE APPROVAL: | DATE:
RELEASE APPROVAL: | DATE:

NATIONAL AERONAUTICS AND SPACE ADMINISTRATION
JOHN H. GLENN RESEARCH CENTER
LEWIS FIELD
CLEVELAND, OHIO

BLDG 1411 - SPF - PLUM BROOK STATION

VIBRATION TABLE ADAPTER

SIZE	BLDG/SYS	PROJECT ID	DISCP	TYP SEQ
PR	1411	-	- M-	501

AREA: | SHEET 01 OF 01
UNITS: ENGLISH | SOFTWARE: AUTOCAD 2010 | REVISION | VER
SCALE: 1" = 1" | OFFICIAL DATE: | -

PROPERTY OF UNITED STATES GOVERNMENT - FOR OFFICIAL USE ONLY.
Do not Remove This NOTICE. PROPERTY OF GRC/SPF DOCUMENT. Form No. 10-Digit: -REV0000