DWG NO.	SH.	REV
A334A-1000-G1		

LOCATION MAP

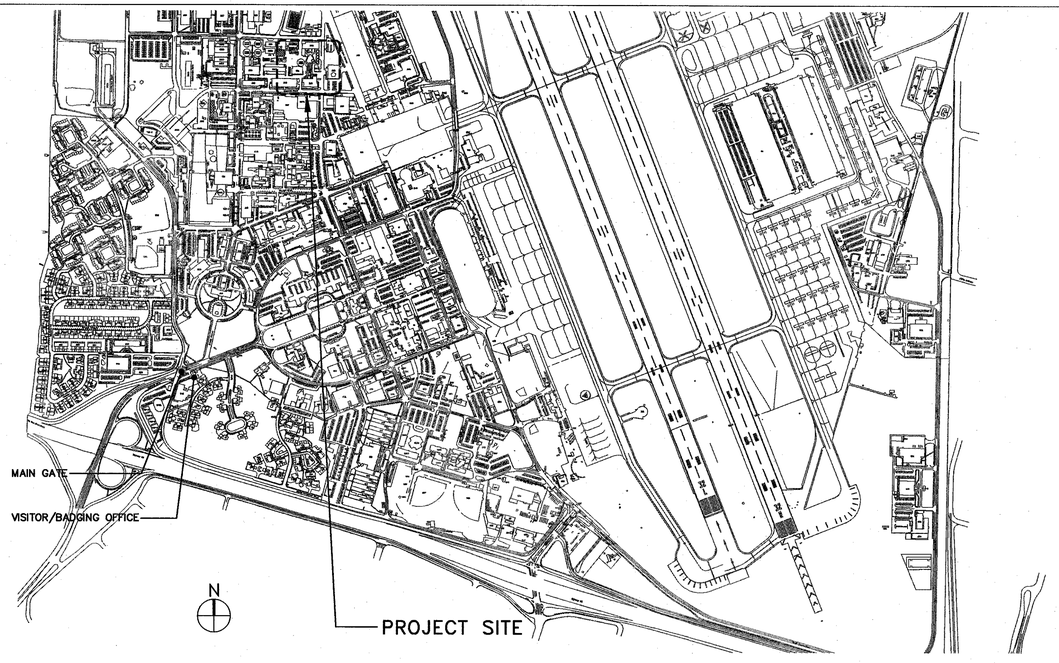

PROJECT TITLE AND DRAWING INDEX

NASA AMES RESEARCH CENTER
MOFFETT FIELD, CA
STEAM VACUUM SYSTEM
NOx EMISSION REDUCTION SYSTEM

DRAWING & SPECIFICATION INDEX

DRAWINGS

GENERAL
- A334A-1000-G1 TITLE SHEET
- A334A-1000-G2 NOTES, ABBREVIATIONS, LEGEND AND SYMBOLS

DEMOLITION
- A334A-1000-D1 OVERALL DEMOLITION PLAN
- A334A-1000-D2 DEMOLITION PHOTOS
- A334A-1000-D3 DEMOLITION PHOTOS

STRUCTURAL
- A334A-1000-S1 STRUCTURAL NOTES AND ABBREVIATIONS
- A334A-1000-S2 FOUNDATION PLAN
- A334A-1000-S3 ENLARGED FOUNDATION PLAN

MECHANICAL
- A334A-1000-M1 MECHANICAL NOTES
- A334A-1000-M2 EQUIPMENT SCHEDULES
- A334A-1000-M3 SITE PLAN
- A334A-1000-M4 ENLARGED SITE PLAN
- A334A-1000-M5 PARTIAL SITE PLAN – COOLING TOWER
- A334A-1000-M6 PHOTOS & DETAILS
- A334A-1000-M7 PROCESS PIPING DIAGRAM
- A334A-1000-M8 PIPE SUPPORT DETAILS
- A334A-1000-M9 PIPE SUPPORT DETAILS

ELECTRICAL
- A334A-1000-E1 ELECTRICAL NOTES, SYMBOLS & ABBREVIATIONS
- A334A-1000-E2 ELECTRICAL SITE PLAN – EXISTING/DEMO AND NEW WORK
- A334A-1000-E3 'MCC 231' SINGLE LINE DIAGRAM – EXISTING/DEMOLITION
- A334A-1000-E4 'MCC 231' SINGLE LINE DIAGRAM – NEW WORK
- A334A-1000-E5 'MCC 1' SINGLE LINE DIAGRAM – EXISTING/DEMOLITION
- A334A-1000-E6 'MCC 1' SINGLE LINE DIAGRAM – NEW WORK

REFERENCE DRAWINGS
- A331-5903-M0 12 INCH HYPERSONIC HELIUM TUNNEL GENERAL ARRANGEMENT
- A331-5903-M1 GENERAL PLAN 2–75'–3"–4" 0 VACUUM SPHERES
- A331-5903-M2 SHELL PLATE DETAILS 75'–3'4" 0 VACUUM SPHERE
- A331-5903-M3 12 INCH HYPERSONIC HELIUM TUNNEL VACUUM STORAGE VESSELS & PIPING LAYOUT & DETAILS
- A331-5903-M5 COLUMN DETAIL FOR 75"–3'4" 0 HORTON SPHERE
- A331-5903-M6 INTERNAL MOVABLE LADDER 75'–3'4" ID HORTON SPHERE AMES AERONAUTICAL LABORATORY
- A331-5903-M7 INTERNAL MOVABLE LADDER & TRUSS 75'–3'4" ID HORTON SPHERE AMES AERONAUTICAL LAB
- A331-5903-M15 12 INCH HYPERSONIC HELIUM TUNNEL FOUNDATIONS FOR VACUUM SPHERES
- A334A-7201-S1 NITROGEN OXIDES REMOVAL SYSTEM FOUNDATIONS DETAILS
- A434A-8134-S1 VACUUM PUMP SYSTEM FOUNDATION

PROJECT SPECIFICATIONS

DIVISION 01 – GENERAL REQUIREMENTS
- SECTION 01 00 00 GENERAL REQUIREMENTS
- SECTION 01 10 00 SAFETY AND HEALTH
- SECTION 01 11 00 SUMMARY OF WORK
- SECTION 01 33 00 SUBMITTAL PROCEDURES
- SECTION 01 40 00 QUALITY CONTROL
- SECTION 01 50 00 ENVIRONMENTAL COMPLIANCE AND POLLUTION PREVENTION

DIVISION 02 – EXISTING CONDITIONS
- SECTION 02 05 00 ALTERATIONS AND DEMOLITION
- SECTION 02 09 00 LEAD PAINT ABATEMENT/DEMOLITION
- SECTION 02 20 00 SITE PREPARATION AND EARTHWORK
- SECTION 02 50 00 ASPHALT–CONCRETE PAVING AND MARKINGS

DIVISION 03 – CONCRETE
- SECTION 03 30 00 CAST–IN–PLACE CONCRETE

DIVISION 05 – METALS
- SECTION 05 12 00 STRUCTURAL STEEL

DIVISION 15 – MECHANICAL
- SECTION 15 00 00 GENERAL MECHANICAL
- SECTION 15 05 00 BASIC MECHANICAL MATERIALS AND METHODS
- SECTION 15 40 00 PLUMBING

DIVISION 23 – HEATING, VENTILATING AND AIR CONDITIONING
- SECTION 23 65 00 COOLING TOWERS
- SECTION 23 81 48 PLATE HEAT EXCHANGER

DIVISION 26 – ELECTRICAL
- SECTION 26 00 00.00 20 BASIC ELECTRICAL MATERIALS AND METHODS
- SECTION 26 05 00.00 40 COMMON WORK RESULTS FOR ELECTRICAL
- SECTION 26 05 48.00 10 SEISMIC PROTECTION FOR ELECTRICAL EQUIPMENT
- SECTION 26 05 71.00 40 LOW VOLTAGE OVERCURRENT PROTECTIVE DEVICES
- SECTION 26 29 23 VARIABLE FREQUENCY DRIVES
- SECTION 26 56 00 EXTERIOR LIGHTING

DIVISION 31 – EARTHWORK
- SECTION 31 23 33 TRENCHING AND BACKFILL

DIVISION 40 – PROCESS INTEGRATION
- SECTION 40 05 13.96 WELDING PROCESS PIPING

DIVISION 44 – POLLUTION AND WASTE CONTROL EQUIPMENT
- SECTION 44 10 00 AIR POLLUTION CONTROL

SCOPE OF WORK:

REFER TO THE DRAWING INDEX AND SPECIFICATION INDEX FOR LIST OF THE CONTRACT DOCUMENTS FOR THIS PROJECT. SCOPE INCLUDES ALL LABOR AND MATERIALS REQUIRED FOR A COMPLETE AND OPERATING INSTALLATION. IN THE CASE OF DISCREPANCY BETWEEN DRAWINGS AND SPECIFICATIONS, REQUIREMENTS DESCRIBED IN THE DRAWINGS SHALL PREVAIL. SEE PROJECT SEQUENCE NOTES FOR SEQUENCE OF CONSTRUCTION. SCOPE OF WORK INCLUDES, BUT NOT LIMITED TO THE FOLLOWING:

BASE BID:
BASE BID INCLUDES NOX EMISSION REDUCTION SYSTEM AND ALL OTHER WORK ON PLANS, EXCEPT THAT WORK WHICH IS SPECIFICALLY IDENTIFIED AS A BID ADDITIVE, INCLUDING:

1. REMOVE (E) FOUNDATIONS AND PADS AS NECESSARY FOR THE INSTALLATION OF NEW NOX EMISSION REDUCTION SYSTEM.
2. DESIGN AND INSTALL SVS NOX EMISSION REDUCTION SYSTEM WITH ASSOCIATED COLUMNS, PUMPS AND PIPING.
3. INSTALL COOLING TOWER AND HEAT EXCHANGER WITH ASSOCIATED PUMPS AND PIPING IF REQUIRED FOR NOX EMISSION REDUCTION SYSTEM.
4. INSTALL STORAGE BUILDING WITH SECONDARY CONTAINMENT TO ENCLOSE NOX GAS ANALYZER, CHEMICAL FEED PUMPS, CONTROL PANEL, MOTOR CONTROL PANEL, AND EYE WASH STATION.
5. INSTALL NOX EMISSION CHART RECORDER AND REMOTE CONTROL AND ALARM INSIDE CONTROL ROOM OF BUILDING N234A BOILER PLANT WITH REQUIRED CONNECTIONS FROM NOX EMISSION ANALYZER TO RECORD NOX EMISSIONS, AND FOR NOX EMISSION SYSTEM REMOTE OPERATION.
6. PROVIDE AND INSTALL CHEMICAL TANKS FOR NOX EMISSION REDUCTION SYSTEM.
7. PERFORM COMMISSIONING AND ACCEPTANCE TESTING OF ALL NEW SYSTEMS.
8. INSTALL 18" BLIND PADDLE AFTER NOX EMISSION REDUCTION SYSTEM IS COMPLETELY INSTALLED AND TESTED.
9. INSTALL LIGHTING ON COOLING TOWER (IF COOLING TOWER IS REQUIRED) AND ON NOX EMISSION REDUCTION SYSTEM.
10. SUBMIT SYSTEM HAZARD ANALYSIS.

BID ADDITIVE:
1. DESIGN AND INSTALL ACCESS AND MAINTENANCE PLATFORMS AND CATWALKS FOR THE NEW NOX EMISSION REDUCTION SYSTEM.

BID PROPOSAL

PRIOR TO BIDDING, CONTRACTOR AND ALL SUBCONTRACTORS SHALL VISIT JOB SITE TO BECOME FAMILIAR WITH THE EXISTING INSTALLATION AND SYSTEMS RELATED TO PROJECT WORK.

INCLUDE SEPARATE SUMS IN BID PROPOSALS FOR BASE BID AND EACH BID ADDITIVE, AS NOTED ABOVE.

STAGING PLAN

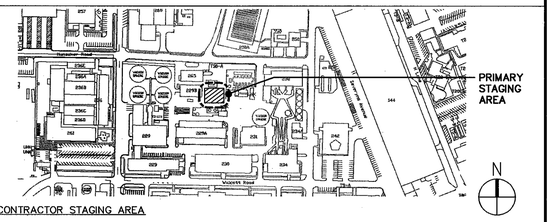

CONTRACTOR STAGING AREA

1. CONTRACTOR MAY ELECT AT HIS OPTION TO UTILIZE THE DESIGNATED AREA FOR FABRICATION OR STORAGE. IF THE DESIGNATED AREA IS UTILIZED, PROVIDE A 6'–0" HIGH TEMPORARY PERIMETER FENCE WITH LOCKED GATE.
2. NO UTILITIES ARE AVAILABLE AT THE SITE. CONTRACTOR IS RESPONSIBLE FOR ALL UTILITIES SUCH AS TEMPORARY SANITARY, FIRE PROTECTION, WATER, ELECTRICITY, GAS.
3. CONTRACTOR CAN STAGE A TRAILER IN THE AREA WEST OF SPHERE 5 BUT NO CLOSER THAN 20FT FROM N231. POWER (ONE 20AMP 120V) AND WATER IS AVAILABLE FROM N231 FOR CONTRACTOR'S USE DURING CONSTRUCTION.

Approved for Construction
Moffett Field Permit Board

Chief Building Official
Permit No. 11P002

HEALTH, SAFETY & ENVIRONMENTAL COMPLIANCE

1. PERFORM ALL WORK IN STRICT ACCORDANCE WITH CAL–OSHA, FED–OSHA, CAL–EPA, FED–EPA, SANTA CLARA COUNTY AND BAAQMD (BAY AREA AIR QUALITY MANAGEMENT DISTRICT) REQUIREMENTS, RWQCB (REGIONAL WATER QUALITY CONTROL BOARD), AND THE SWPPP (STORM WATER POLLUTION PREVENTION PLAN).
2. FOR ALL WORK ON PROPERTY OF NASA AMES RESEARCH CENTER, COMPLY WITH NASA AMES HEALTH AND SAFETY MANUAL (APR 1700.1) AND NASA AMES ENVIRONMENTAL MANAGEMENT HANDBOOK (APR 8800.3). FOLLOW REQUIREMENTS FOR CONSTRUCTION SAFETY (CHAPTER 27), AND ALL OTHER APPLICABLE CHAPTERS. BOTH MANUALS ARE AVAILABLE ON–LINE:
   HTTP://SERVER–MP0.ARC.NASA.GOV/SERVICES/CDMSDOCS/CENTERS/ARC/DIRS/APR/APR1700.1C27.HTML
3. CONDUCT ELECTRICAL WORK PER NFPA 70E, STANDARDS FOR ELECTRICAL SAFETY IN THE WORKPLACE.
4. UPDATE ELECTRICAL PANEL SCHEDULES TO REFLECT ALL CHANGES TO THE SYSTEM.
5. PROVIDE TRAFFIC CONTROL PER MANUAL ON UNIFORM TRAFFIC CONTROL DEVICES (MUTCD) 2003 EDITION, AND REVISIONS 1 AND 2 DATED 12/2007. (http://mutcd.fhwa.dot.gov/kno 2003r1r2.htm)
6. SUBMIT FALL PROTECTION PLAN, DEMOLITION PLAN, MATERIAL LIFTING PLAN, AND EXCAVATION PLAN PER SPECIFICATION SECTION 01 10 00. SUBMIT PLANS TO COTR, WHO SHALL SUBMIT TO NASA AMES SAFETY OFFICE.
7. ONLY TRAINED AND AUTHORIZED PERSONS MAY ENTER CONFINED SPACES.
8. OBTAIN HOT WORK PERMIT PER APR 1700.1 CHAPTER 20 AND 27, PRIOR TO START OF HOT WORK (WELDING, CUTTING, BRAZING).
9. MINIMIZE NOISE LEVELS AT ALL TIMES. IDENTIFY TIMES OF HIGH NOISE LEVEL IN WORK PLAN.
10. ADHERE TO NASA AMES LEAD MANAGEMENT PLANS, AND FEDERAL, STATE, AND LOCAL REQUIREMENTS FOR REMOVAL AND DISPOSAL OF THE MATERIALS CONTAINING LEAD. ALL SUSPECTED ITEMS BEING IMPACTED ARE ASSUMED TO CONTAIN LEAD UNLESS SAMPLING INDICATED OTHERWISE. SEE SPECIFICATIONS 02 09 00 & AMES HEALTH AND SAFETY MANUAL, CHAPTER 35 LEAD MANAGEMENT PLAN. MATERIALS TESTED POSITIVE FOR LEAD INCLUDE:
    PAINT ON EXISTING STRUCTURAL STEEL.
11. CONTAIN WATER FROM CONCRETE REMOVAL OR INSTALLATION OPERATIONS, AND DISPOSE OFF SITE. DISCHARGE TO THE STORM DRAIN SYSTEM IS NOT ALLOWED. FOLLOW BEST MANAGEMENT PRACTICE AS REQUIRED IN THE NASA ARC INDUSTRIAL PERMIT FOR STORM WATER DISCHARGES (CAS000001)
12. NOTIFY COTR PRIOR TO ANY PLANNED DISCHARGE OF POTABLE WATER TO THE STORM DRAIN SYSTEM PER THE STORM WATER INDUSTRIAL PERMIT. INFORM COTR THE DATE, TIME, AMOUNT AND NATURE OF THE DISCHARGE. (CAS000001)
13. IF SOIL CONTAMINATION IS ENCOUNTERED, CONTACT COTR. THERE IS NO KNOWN SOIL CONTAMINATION IN THIS AREA. ON SITES LOCATED ADJACENT TO REGIONAL GROUND WATER PLUME, SHALLOW SOIL EXCAVATIONS (LESS THAN 3 FEET) SHOULD NOT ENCOUNTER CONTAMINATED GROUNDWATER. IF EXCAVATING DEEPER THAN 3 FEET BELOW GROUND SURFACE, CONTACT COTR.
14. DESIGN OF NOX REDUCTION SYSTEM SHALL COMPLY WITH OSHA 29 CFR 1910.119 AND CFR 1926.64.

CODES AND REFERENCES

PROJECT SPECIFICATIONS AND DRAWINGS LISTED IN INDEX CONSTITUTE THE CONTRACT DOCUMENTS FOR THIS PROJECT. PERFORM WORK ACCORDING TO THE PROJECT SPECIFICATIONS AND THE CODES AND STANDARDS LISTED IN APR 8829.1 (AMES PROCEDURAL REQUIREMENT) INCLUDING, BUT NOT LIMITED TO, THE FOLLOWING:

AMES RESEARCH CENTER HEALTH AND SAFETY MANUAL – APR 1700.1
ASME B31.3 PROCESS PIPING CODE – 2008
ASME B16.5 PIPE FLANGES AND FLANGED FITTINGS – 2009
ASME BOILER PRESSURE VESSEL CODE (BPVC) SECTION IX – 2010 (WHERE APPLICABLE)
ASCE 7 MINIMUM DESIGN LOADS FOR BUILDINGS AND OTHER STRUCTURES – 2005
CALIFORNIA BUILDING CODE (CBC) – 2007
CALIFORNIA FIRE CODE (CFC) – 2007
CALIFORNIA MECHANICAL CODE (CMC) – 2007
CALIFORNIA PLUMBING CODE (CPC) – 2007
CALIFORNIA ELECTRICAL CODE (CEC) – 2007

PROJECT SEQUENCE NOTES

GENERAL: NOT ALL CONSTRUCTION AND DEMOLITION WORK CAN PROCEED CONCURRENTLY.

(E) NOX REDUCTION SYSTEM SHALL REMAIN FUNCTIONAL AND OPERATIONAL DURING CONSTRUCTION OF NEW NOX REDUCTION SYSTEM. (E) SVS SYSTEM AND (E) NOX REDUCTION SYSTEM WILL BE OPERATING DURING CONSTRUCTION PERIOD. PERSONAL PROTECTIVE SAFETY EQUIPMENT MUST BE WORN TO MITIGATE HAZARDS ASSOCIATED WITH SVS OPERATION, INCLUDING HEARING PROTECTION.

CONSTRUCTION SHALL PROCEED ACCORDING TO THIS SEQUENCE:

1. CONSTRUCT NEW NOX REDUCTION SYSTEM. PREPARE FOR TESTING, AND PERFORM FUNCTIONAL TESTS. PERFORM HYDROSTATIC TESTS OF NEW PIPING.
2. WHEN NEW 18" SVS OUTLET PIPE IS COMPLETED FROM (E) PIPING TO NEW NOZZLE FLANGE ON GAS COOLING COLUMN, PREPARE FOR HYDROSTATIC TEST. SEE TEST PLAN ON M7 FOR TEST BOUNDARY AND LOCATIONS OF BLIND PADDLES. PERFORM HYDROSTATIC TEST OF 18" PIPING.
3. PREPARE NEW NOX SYSTEM FOR OPERATIONAL TESTING. RELOCATE 18" BLIND PADDLE FROM (E) VALVE IN VERTICAL PIPE TO (E) 18" FLANGE ON OVERHEAD PIPE TO (E) NOX SYSTEM. PERFORM OPERATIONAL TESTING, COMMISSIONING, AND CHECKOUT.

REGISTERED PROFESSIONAL ENGINEER — MICHAEL S. CALLAHAN — MECHANICAL — STATE OF CALIFORNIA

REVISIONS

ZONE	LETTER		DRAWN	DATE	APPRVD

		DATE
DRAWN J.HO		3/13/12
DESIGNED M.CALLAHAN		3/13/12
CHECKED J.XIANG	Jin Fa Xiang	3/13/12
PROJMGR P.WAN		3/13/12
REQUESTER R.OLIVARES		3/14/12
R&QA		DATE
SAFETY D.FRASER		3/15/12
SUPERVISOR S.FRANKEL		3/15/12
		DATE

Ames Research Center
Moffett Field, California

STEAM VACUUM SYSTEM NOx EMISSION REDUCTION SYSTEM
GENERAL

TITLE SHEET

SIZE	CAGE CODE	DWG NO.	REV
D	25307	A334A-1000-G1	
SCALE NONE		INDEX	SHEET OF

FILE NAME: A334A-1000-G1_1 03-12-2012

60220641

DWG: R:\234A\60220641.0001 (K110335) NOx Scrubber Engrg Support\500_CAD.Rev3\G\Sheet\A334A-----1000-G01_1.dwg Version: 18.1s (LMS Tech) User: jjho
DATE: Mar 14, 2012 - 12:56:54 pm

DWG NO. A334A-1000-G2 | SH. | REV

GENERAL NOTES

1. ALL DIMENSIONS SHOWN ARE APPROXIMATE. FIELD VERIFY DIMENSIONS PRIOR TO CUTTING, FABRICATING, INSTALLING AND ORDERING PARTS. NOTIFY COTR IMMEDIATELY OF ANY DISCREPANCIES.
2. ALL MATERIALS AND EQUIPMENT ARE NEW, UNLESS CALLED OUT AS EXISTING. LOCATE AND ORIENT PIPING AS INDICATED ON THE DRAWINGS.
3. ENSURE THAT NO FOREIGN MATTER ENTERS PIPING OR EQUIPMENT PRIOR TO INSTALLATION.
4. LABEL ALL NEW NOx EMISSION REDUCTION SUCTION AND DISCHARGE PIPING ABOVE GRADE "NOx EMISSION REDUCTION" AND PAINT GRAY.
5. SUBMIT SHOP DRAWINGS PER SPECIFICATION SECTION 44 10 00.
6. REMOVE ALL TRASH AND CONSTRUCTION DEBRIS FROM GOVERNMENT PROPERTY, AND LEGALLY DISPOSED OF OFF SITE.
7. PROVIDE SUPERVISION, LABOR, EQUIPMENT, TOOLS, MATERIALS, AND SUPPLIES TO COMPLETE THE WORK AS INDICATED.
8. ALL DIMENSIONS ARE IN ENGLISH UNITS, UON. INSPECTIONS WILL BE MADE IN ENGLISH DIMENSIONS. SUBMIT SHOP DRAWINGS WITH ENGLISH UNITS, UNLESS OTHERWISE DIRECTED BY COTR.
9. SUBMIT TO COTR ALL REQUESTS FOR MODIFICATIONS TO THE PLANS & SPECIFICATIONS IN WRITING.
10. NOTIFY COTR OF ALL DRAWING DISCREPANCIES AND OMISSIONS, AND NOTIFY COTR IF CONTRACT DOCUMENTS CONFLICT WITH EXISTING CONDITIONS, BEFORE PROCEEDING WITH ANY ELEMENT OF THIS PROJECT.
11. DETAILS NOT SHOWN ARE SIMILAR IN CHARACTER TO THOSE DETAILED. WHERE SPECIFIC DIMENSIONS, DETAILS OR DESIGN INTENT CANNOT BE DETERMINED CONSULT COTR BEFORE PROCEEDING WITH WORK. TYPICAL DETAILS APPLY AT ALL SIMILAR CONDITIONS WHETHER OR NOT CROSS REFERENCED.
12. DO NOT SCALE DRAWINGS FOR DIMENSIONAL INFORMATION.
13. LOCATION OF ALL EXISTING UNDERGROUND UTILITIES CROSSING OR ADJACENT TO PROPOSED WORK ARE NOT NECESSARILY SHOWN ON THE PLANS. LOCATIONS SHOWN ARE APPROXIMATE. NO CLAIM FOR DAMAGES OR EXTRA COMPENSATION WILL BE AWARDED TO CONTRACTOR FROM THE PRESENCE OF SUCH UTILITIES. CONTRACTOR SHALL BE RESPONSIBLE FOR ANY DAMAGE TO SUCH UTILITIES.
14. SUBMIT ALL MATERIAL CUT SHEETS TO COTR FOR APPROVAL BEFORE ORDERING MATERIALS.

DESIGN–BUILD SPECIFICATIONS

1. DESIGN–BUILD SCOPE: DESIGN, FABRICATE, INSTALL AND TEST ALL NEW EQUIPMENT, PIPING, PIPING SUPPORTS AND CONTROLS, EXCEPT AS NOTED AS BUILD–TO–PRINT SCOPE OF WORK IN MECHANICAL GENERAL NOTES.
2. DESIGN–BUILD CRITERIA: REFER TO ALL CONTRACT DOCUMENTS. DESIGN EQUIPMENT, SUPPORTS, PIPING AND PIPE SUPPORTS TO RESIST FORCES PER 2007 CBC. DESIGN FOR SITE SPECIFIC SEISMIC AND WIND LOADING CRITERIA LISTED:

   SEISMIC: Ip=1.0, ap=1.0, Rp=2.5, SITE CLASS=D (CHAPTER 13 & 15), UON
   WIND: 85 MPH (CHAPTER 6)

   HPA DESIGN: Ip=1.5 FOR HPA PIPING. USE ASCE 7 MCE RESPONSE SPRECTRUM FOR DYNAMIC STRESS ANALYSIS OF OCCASSIONAL LOADS.
3. DESIGN–BUILD QUALITY: DESIGN MUST MEET SPECIFIED PERFORMANCE REQUIREMENTS INDICATED ON THE CONTRACT DOCUMENTS. CONCEPTUAL DESIGN DEPICTED ON THE DRAWINGS IS DIAGRAMMATIC, AND ILLUSTRATES DESIGN INTENT. IT IS NOT INTENDED TO SHOW THE ONLY ACCEPTABLE DESIGN, OR FORBID OTHER DESIGNS WHICH ACCOMPLISH THE REQUIRED PERFORMANCE. PROVIDE ALTERNATE ROUTING, OFFSETS AND TRANSITIONS, AND OTHER ELEMENTS NOT SHOWN ON PLANS WHERE REQUIRED FOR COMPLETION OF WORK, AT NO ADDITIONAL COST TO GOVERNMENT.
4. DESIGN–BUILD DESIGNER QUALIFICATIONS: STRUCTURAL EQUIPMENT SUPPORTS AND PIPING SUPPORTS SHALL BE DESIGNED AND STAMPED BY A STRUCTURAL ENGINEER REGISTERED IN THE STATE OF CALIFORNIA. ALL OTHER DESIGN–BUILD ITEMS SHALL BE DESIGNED AND STAMPED BY A REGISTERED PROFESSIONAL ENGINEER.
5. DESIGN–BUILD SUBMITTALS: SUBMIT STAMPED SHOP DRAWINGS AND STAMPED CALCULATIONS TO COTR FOR APPROVAL, AND PERMIT REVIEW BOARD FOR CONSTRUCTION PERMIT, PRIOR TO FABRICATION. CALCULATIONS SHALL INCLUDE PIPING ANALYSIS TO DEMONSTRATE THAT DESIGN OF PIPES AND PIPE SUPPORTS MEETS SPECIFIED CRITERIA, INCLUDING ASME B31.3, CBC, AND ASCE 7 FOR SEISMIC CALCULATIONS. SUBMIT HYDROSTATIC TEST PLAN FOR NORMAL SERVICE PROCESS PIPING, INCLUDING TEST PRESSURE, TEST BOUNDARIES, AND ALL TEST DEVICES AND EQUIPMENT REQUIRED. NASA APPROVAL OF STRESS ANALYSIS AND PIPE SUPPORTS IS REQUIRED PRIOR TO CONSTRUCTION.

DESIGN–BUILD SEISMIC NOTES

1. DESIGN EQUIPMENT, SUPPORT, ANCHORAGE, AND BRACING TO MEET THE SITE SPECIFIC SEISMIC CRITERIA IN ACCORDANCE WITH THE 2007 CBC.
2. SUBMIT SEISMIC CALCULATIONS AND DETAILS FOR SUPPORT, ANCHORAGE AND BRACING OF DESIGN–BUILD ELEMENTS. PREPARE CALCULATIONS WITH WET STAMP BY A CALIFORNIA LICENSED STRUCTURAL ENGINEER. SUBMIT CALCULATIONS AND DETAILS FOR REVIEW BY NASA STRUCTURAL ENGINEER. FURNISH SEISMIC CALCULATIONS AND DETAILS TO THE GENERAL CONTRACTOR FOR INSTALLATION.

LEGEND

SECTION: A / A1 A2 — PHOTO: 1 / A1 A5 — DETAIL: 1 / A1 A2

GRAPHIC REFERENCE DESCRIPTION
- REFERENCE IDENTIFICATION NUMBER
- SHEET WHERE SHOWN
- SHEET FROM WHICH REFERENCED

TEXT REFERENCE DESCRIPTION
- 1/A2 — SHEET WHERE REFERENCE IS SHOWN
- REFERENCE IDENTIFICATION NUMBER

SYMBOL	DESCRIPTION
XX / X	EQUIPMENT TAG IDENTIFICATION / EQUIPMENT SEQUENCE NUMBER
X	KEY NOTE TAG
X	HYDROSTATIC TEST BOUNDARY TAG
XXX–X	PIPE SUPPORT TAG WITH SEQUENCE NUMBER
	POINT OF CONNECTION
	POINT OF DISCONNECTION
℄	CENTERLINE
	PIPE OR EQUIPMENT TO BE DEMOLISHED
	EXISTING PIPE, EQUIPMENT OR BUILDING TO REMAIN
	NEW PIPE, EQUIPMENT OR NEW WORK
	HIDDEN OR UNDERGROUND PIPE OR EQUIPMENT
	CALIBRATED BALANCING VALVE (CIRCUIT SETTER)
	CHECK VALVE (CKV)
	FLEXIBLE PIPE CONNECTION (NEOPRENE TYPE)
	FLEXIBLE PIPE CONNECTION (BELLOWS TYPE)
	GATE VALVE
	BALL VALVE
	BALL VALVE (FLANGED)
	BUTTERFLY VALVE (BFV)
	BUTTERFLY VALVE (DOUBLE LINE)
	GLOBE VALVE
	PRESSURE REDUCING VALVE
R	PRESSURE RELIEF VALVE
S	PRESSURE SAFETY RELIEF VALVE
	PUMP
	SOCKET WELDED JOINT
	BUTT–WELDED JOINT
	BUTT–WELDED TEE (WTEE)
	BRANCH PIPE AWAY FROM VIEWER
	BRANCH PIPE TOWARD VIEWER
	PIPE OFFSET
	PIPING CUT AWAY TO EXPOSE HIDDEN VIEW
	PIPE CROSSING
	MANUAL AIR VENT
	PIPE REDUCER (ECCENTRIC)
	PIPE REDUCER (CONCENTRIC)
P	PRESSURE GAGE
	PRESSURE AND TEMPERATURE TEST PLUG
	PIPE SUPPORT
	SHUT–OFF COCK
	TRIPLE DUTY VALVE
	STRAINER WITH BLOW–DOWN VALVE

SYMBOL	DESCRIPTION
	BASKET STRAINER (SIMPLEX)
M	WATER METER
RPZ	REDUCED PRESSURE ZONE BFP
	ANSI FLANGED CONNECTION
	ORIFICE TYPE FLOW MEASURING STATION
	UNION CONNECTION
	THERMOMETER
G	PIPE DOWN
O	PIPE UP
E	PIPE CAP
CF	CHEMICAL FEED
CTS	COOLING TOWER WATER SUPPLY
CTR	COOLING TOWER WATER RETURN
D	DRAIN
G	FUEL GAS (NATURAL OR PROPANE)
W	MAKE–UP WATER
IW	INDUSTRIAL WASTE
SD	STORM DRAIN
HPA	HIGH PRESSURE AIR (6000 PSIG)
O	OXIDIATION REDUCTION POTENTIAL SENSOR
pH	pH SENSOR
L	LEVEL SENSOR
N	NOX SENSOR
F	GAS FLOW SENSOR
T	TEMPERATURE SENSOR
	ELECTRICAL WIRING
E	ELECTRICAL POWER CONNECTION
D	DATA CABLE LINK (BLN OR FLN)
M	ELECTRICAL MOTOR
MS	MOTOR STARTER BY DIV. 23
CB	SHUNT TRIP CIRCUIT BREAKER
VFD	VARIABLE FREQUENCY DRIVE
DS	ELECTRICAL DISCONNECT SWITCH
HOA	MANUAL HAND–OFF–AUTOMATIC SWITCH
R	CONTROL RELAY
S	MANUAL SWITCH
CS	CURRENT SENSOR
M	AUTOMATIC CONTROL VALVE (2–WAY)
M	AUTOMATIC CONTROL VALVE (2–WAY)
M	AUTOMATIC CONTROL VALVE (3–WAY)
T	WATER TEMPERATURE SENSOR IN WELL
XFMR	STEP–DOWN CONTROLS TRANSFORMER
FACP	FIRE ALARM CONTROL PANEL
DI	FMCS DIGITAL INPUT
DO	FMCS DIGITAL OUTPUT
AI	FMCS ANALOG INPUT
AO	FMCS ALALOG OUPUT

ABBREVIATIONS

(NOT ALL ITEMS ARE USED)

&	AND
@	AT
ø	ROUND OR DIAMETER
#	POUND OR NUMBER
ACFM	ACTUAL CUBIC FEET PER MINUTE
ACM	ASBESTOS CONTAINING MATERIAL
ADA	AMERICANS WITH DISABILITY ACT
AFG	ABOVE FINISHED GRADE
AG	AIR GAP
AL	ALUMINUM
AMB	AMBIENT TEMPERATURE
ANSI	AMERICAN NATIONAL STANDARDS INSTITUTE
AP	ACCESS PANEL
APD	AIR PRESSURE DROP ("WG)
ASCE	AMERICAN SOCIETY OF CIVIL ENGINEERS
ASCS	AMES STD CONSTRUCTION SPECIFICATIONS
ASHRAE	AMERICAN SOCIETY OF HEATING REFRIGERATING AND AIR CONDITIONING ENGINEERS
ASME	AMERICAN SOCIETY OF MECHANICAL ENGINEERS
ASTM	AMERICAN SOCIETY FOR TESTING AND MATERIALS
ATSC	ADVANCE TELEVISION SYSTEM COMMITTEE
AV	ATMOSPHERIC VENT
AVG	AVERAGE
AWS	AMERICAN WELDING SOCIETY
AWWA	AMERICAN WATER WORKS ASSOCIATION
BAAQMD	BAY AREA AIR QUALITY MANAGEMENT DISTRICT
BBFV	BALANCING BUTTERFLY VALVE
BF	BLIND FLANGE
BFP	BACKFLOW PREVENTION ASSEMBLY
BFV	BUTTERFLY VALVE
BHP	BRAKE HORSEPOWER
BIC	BUILDING INDUSTRY CONSULTANTS
BICSI	BUILDING INDUSTRY CONSULTANTS INSTITUTE
BLDG	BUILDING
BOP	BOTTOM OF PIPE
BSS	BASE SPRING SUPPORT
BTU	BRITISH THERMAL UNIT
BTUH	BTU PER HOUR
BV	BALL VALVE
BW	BUTT WELD
CC	CAUSTIC COLUMN
CF	CHEMICAL FEED
CFF	CAP FOR FUTURE CONNECTION
CFR	CODE OF FEDERAL REGULATION
CFM	CUBIC FEET PER MINUTE
CKV	CHECK VALVE
CO	CLEANOUT
COL	COLUMN
CONC	CONCRETE
COTR	CONTRACTING OFFICER'S TECHNICAL REPRESENTATIVE
CP	CHEMICAL PROCESS PUMP
CSI	CONSTRUCTION SPECIFICATIONS INSTITUTE
CTP	COOLING TOWER PUMP
CTS	COOLING TOWER WATER SUPPLY
CTR	COOLING TOWER WATER RETURN
CU FT	CUBIC FEET
CU IN	CUBIC INCH
D	DRAIN
dB	DECIBEL
DB	DRY BULB
DCW	DOMESTIC COLD WATER
DF	DRAFT FAN
DIA	DIAMETER
DISCH	DISCHARGE
DIV	DIVISION
DL	DEAD LOAD
DOE	U.S. DEPARTMENT OF ENERGY
DOT	DEPARTMENT OF TRANSPORTATION
DWG	DRAWING
(E)	EXISTING
EA	EACH
EAT	ENTERING AIR TEMPERATURE
EFF	EFFICIENCY
EIA	ELECTRONIC INDUSTRIES ASSOCIATION
EL	ELEVATION
ELX	SEISMIC LOAD (X–DIRECTION)
ELY	SEISMIC LOAD (Y–DIRECTION)
ELZ	SEISMIC LOAD (Z–DIRECTION)
ELEC	ELECTRICAL
EQ	EQUAL
EQPT	EQUIPMENT
EPA	ENVIRONMENTAL PROTECTION AGENCY (CLEAN WATER ACT)
ESP	EXTERNAL STATIC PRESSURE
EWB	ENTERING WET BULB TEMPERATURE
EWT	ENTERING WATER TEMPERATURE
EXP	EXPANSION
EXT	EXTERNAL
°F	DEGREES FAHRENHEIT
(F)	FUTURE
F&T	FLOAT & THERMOSTATIC STEAM TRAP
FACP	FIRE ALARM CONTROL PANEL
FC	FLEXIBLE CONNECTION
FCC	FEDERAL COMMUNICATION COMMISSION
FLA	FULL LOAD AMPERE
FM	FACTORY MUTUAL
FMCS	FACILITY MANAGEMENT CONTROL SYSTEM
FPM	FEET PER MINUTE
FPS	FEET PER SECOND
FRP	FIBERGLASS REINFORCED PLASTIC
FSM	FACILITY SAFETY MANAGER
FSP	FAN STATIC PRESSURE
FT (')	FEET
FTG	FOOTING
G	GAS
GA	U.S. GAUGE (OR GAGE)
GAL	GALLONS
GALV	GALVANIZED
GC	GAS COOLING COLUMN
GCO	GRADE CLEANOUT
GFE	GOVERNMENT FURNISHED EQPT
GI	GALVANIZED IRON
GN	GENERAL NOTE
GPH	GALLONS PER HOUR
GPM	GALLONS PER MINUTE
GSM	GALVANIZED SHEET METAL
GV	GATE VALVE
H	HEIGHT
H2S2	HYDROGEN DIOXIDE
H2SF04	SULFURIC ACID
HD	HEAD
HGT	HEIGHT
H–O–A	HAND–OFF–AUTOMATIC SWITCH
HORZ	HORIZONTAL
HP	HORSEPOWER
HPA	HIGH PRESSURE AIR
HR	HOURS
HZ	FREQUENCY (HERTZ)
IA	INSTRUMENT AIR
ICW	INDUSTRIAL COLD WATER
ID	INSIDE DIAMETER
IEEE	INSTITUTE OF ELECTRICAL AND ELECTRONICS ENGINEERS
IN (")	INCHES
"WG	INCHES WATER GAUGE
IPS	IRON PIPE (THREAD) SIZE
ISO	INTERNATIONAL ORGANIZATION FOR STANDARDIZATION
IVB	INVERTED BUCKET STEAM TRAP
IW	INDUSTRIAL WASTE
KN	KEY NOTE
KW	KILOWATTS
KWH	KILOWATT–HOUR
LB, LBS	POUNDS
LCV	LEVEL CONTROL VALVE
LR	LONG RADIUS ELBOW
LRA	LOCKED ROTOR AMPERE
LWT	LEAVING WATER TEMPERATURE
MAX	MAXIMUM
MAWP	MAXIMUM ALLOWABLE WP
MBH	THOUSAND BTU PER HOUR
MBFV	MOTORIZED BUTTERFLY VALVE
MCA	MINIMUM CIRCUIT AMPACITY
MC	MOTOR CONTROL
MCC	MOTOR CONTROL CENTER
MCE	MAXIMUM CREDIBLE EARTHQUAKE
MECH	MECHANICAL
MER	MECHANICAL EQUIPMENT ROOM
MFR	MANUFACTURER
MFS	MAXIMUM FUSE SIZE
MH	MANHOLE
MHP	MOTOR HORSEPOWER
MIN	MINIMUM
MISC	MISCELLANEOUS
MOCP	MAXIMUM OVERLOAD CIRCUIT PROTECTION
MOV	MOTOR OPERATED VALVE
MPa	MEGAPASCAL
MS	MOTOR STARTER
MTD	MOUNTED
MU	MAKE–UP WATER
N/A	NOT APPLICABLE
N/C	NORMALLY CLOSED
NaCLO2	SODIUM CHLORITE
NaOH	SODIUM HYDROXIDE
NASA	NATIONAL AERONAUTICS & SPACE ADMINISTRATION
NCS	NATIONAL COMMUNICATION SYSTEM
NCTA	NATIONAL CABLE & TELECOMMUNICATIONS ASSOCIATION
NDE	NON–DESTRUCTIVE EXAMINATION
NEC	NATIONAL ELECTRIC CODE (NFPA 72)
NESC	NATIONAL ELECTRICAL SAFETY CODE
NEMA	NATIONAL ELECTRICAL MANUFACTURERS ASSOCIATION
NFPA	NATIONAL FIRE PROTECTION ASSOCIATION
NIC	NOT IN CONTRACT
NIST	NATIONAL INSTITUTE OF STANDARDS AND TECHNOLOGY
NO.	NUMBER
N/O	NORMALLY OPEN
NSF	NATIONAL SANITATION FOUNDATION
NPSH	NET POSITIVE SUCTION HEAD
NPT	NATIONAL PIPE THREAD
OC	ON CENTER / OXIDATION COLUMN
OD	OUTSIDE DIAMETER
ORP	OXIDATION REDUCTION POTENTIAL
OPER	OPERATING
OSA	OUTSIDE AIR
OSHA	OCCUPATIONAL SAFETY AND HEALTH ACT
OS&Y	OUTSIDE SCREW AND YOKE
OV	OUTLET VELOCITY
PA	PIPE ANCHOR
PEX	CROSS–LINKED POLYETHYLENE
PG	PRESSURE GAUGE
PH	ELECTRICAL PHASE
PL	PLATE
PLC	PROGRAMMABLE LOGIC CONTROLLER
POC	POINT OF CONNECTION
POD	POINT OF DISCONNECTION
PP	POLYPROPYLENE
PPH	POUNDS PER HOUR
PPM	PARTS PER MILLION
PSF	POUNDS PER SQUARE FOOT
PSI	POUNDS PER SQUARE INCH
PSIA	PSI (ABSOLUTE)
PSIG	PSI (GAUGE)
PT	PARTICLE WELD TEST (MAG OR LIQUID)
PTT	PRESSURE & TEMPERATURE TEST PLUG
PUC	PUBLIC UTILITY COMMISSION
PVC	POLYVINYL CHLORIDE
(R)	RELOCATED
RC	REDUCTION COLUMN
REA	RURAL ELECTRIFICATION ADMINISTRATION
REF	REFERENCE ONLY (FIELD VERIFY)
REV	REVISION
RLA	RUNNING (RATED) LOAD AMPERES
RPM	REVOLUTIONS PER MINUTE
RPZ	REDUCED PRESSURE ZONE BACKFLOW PREVENTION ASSEMBLY
RT	RADIOGRAPHIC WELD TEST
RV	RELIEF VALVE
RUS	RURAL UTILITY SERVICE
SCH	PIPE SCHEDULE
SCW	SOFTEN COLD WATER
SD	STORM DRAIN
SF	SQUARE FEET
SG	SPECIFIC GRAVITY
SN	SHEET NOTE
SOF	SLIP–ON FLANGE
SOV	SHUTOFF VALVE (MANUAL)
SQ	SQUARE
SQ IN	SQUARE INCHES
SP	STATIC PRESSURE
SPEC	SPECIFICATION
SR	SHORT RADIUS ELBOW
SRV	SAFETY RELIEF VALVE
SS	STAINLESS STEEL
STD	STANDARD
SUCT	SUCTION
SVS	STEAM VACUUM SYSTEM EFFLUENT GASES
SW	SOCKET WELD
TCV	TEMPERATURE CONTROL VALVE
TDH	TOTAL DYNAMIC HEAD
TEMP	TEMPERATURE
TIA	TELECOMMUNICATION INDUSTRY ASSOCIATION
TL	THERMAL LOAD
TSB	TELECOMMUNICATION SYSTEMS BULLETIN
TSP	TWISTED SHIELDED PAIR
TYP	TYPICAL
UBC	UNIFORM BUILDING CODE
UG	UNDERGROUND
UL	UNDERWRITER LABORATORIES
UNK	PIPE (UNKOWN SERVICE, MATERIAL AND SIZE)
UON	UNLESS OTHERWISE NOTED
USSG	UNITED STATES STANDARD GAUGE
V	VOLT
VA	VOLT–AMPERE
VEL	VELOCITY
VFD	VARIABLE FREQUENCY DRIVE
VOL	VOLUME
VTR	VENT TO ATMOSPHERE THROUGH ROOF
W	WATER
W/	WITH
W/O	WITHOUT
"WG	FT (WATER GAUGE) PRESSURE
WLX	WIND LOAD (X–DIRECTION)
WLZ	WIND LOAD (Z–DIRECTION)
WMS	WIRE MESH SCREEN
WNF	WELDING NECK FLANGE
WOG	WATER, OIL AND GAS
WP	WORKING PRESSURE
WPD	WATER PRESSURE DROP
WT	WEIGHT/WASTE TANK
WTU	WATER TREATMENT UNIT

WELDING SYMBOLS: REFER TO ANSI/AWS D2.4

Approved for Construction
Moffett Field Permit Board
Chief Building Official
Permit No. 11P002

REGISTERED PROFESSIONAL ENGINEER — MICHAEL S. CALLAHAN — No. M 21884 — MECHANICAL — STATE OF CALIFORNIA — Exp. 6/30/13

ZONE	LETTER	DESCRIPTION	DRAWN	DATE	APPRVD
REVISIONS					

DRAWN J.HO	DATE 3/13/2012	Ames Research Center, Moffett Field, California
DESIGNED M.CALLAHAN	DATE 3/13/12	
CHECKED J.XIANG	DATE 3/13/12	STEAM VACUUM SYSTEM NOx EMISSION REDUCTION SYSTEM
PROJMGR P.WAN	DATE 3/13/12	GENERAL
REQUESTER R.OLIVARES	DATE 3/13/12	NOTES, ABBREVIATIONS, LEGEND AND SYMBOLS
R&QA	DATE	
SAFETY D.FRASER	DATE 3/15/12	
SUPERVISOR S.FRANKEL	DATE 3/15/12	SIZE D · CAGE CODE 25307 · A 334A-1000-G2 · REV
	DATE	SCALE NONE · INDEX · SHEET · OF

FILE NAME: A334A-1000-G2 03-12-2012

60220641

DWG: R:\334A\60220641.0001 (K11035) NOx Scrubber Engrg Support\500_CAD,Rev3\G\Sheet\A334A---1000-G02.dwg Version: 17.1s (LMS Tech) User: rschaef1
DATE: Mar 12, 2012 - 1:37:34 pm

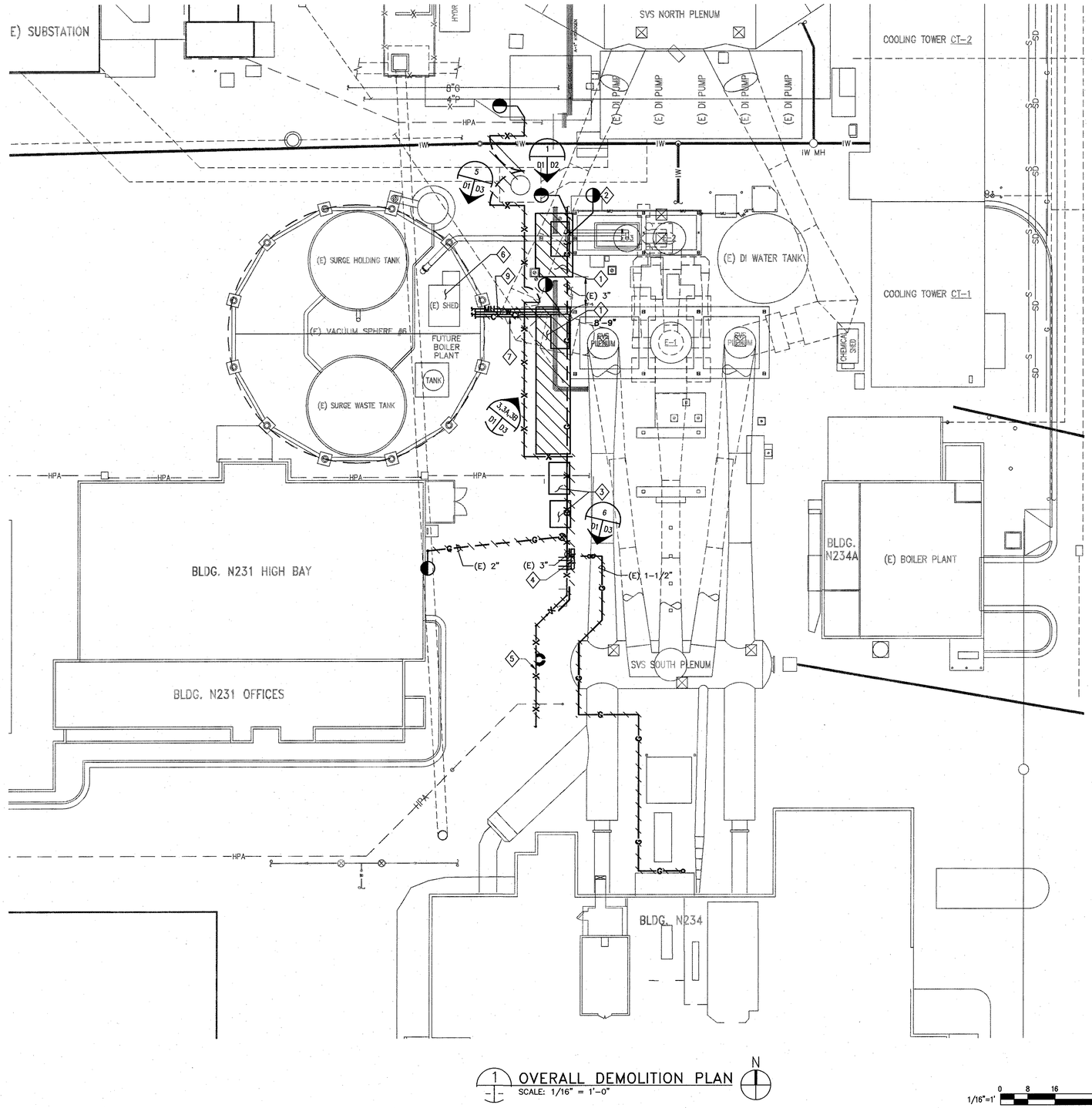

1 OVERALL DEMOLITION PLAN
SCALE: 1/16" = 1'-0"

SHEET NOTES

1. NOT ALL (E) PIPING AND EQUIPMENT IS SHOWN FOR CLARITY.
2. VERIFY ALL EXISTING DIMENSIONS IN THE FIELD PRIOR TO DEMOLITION WORK. NOTIFY COTR OF ANY DISCREPANCIES PRIOR TO START OF DEMOLITION WORK.
3. ALL SURFACES DAMAGED BY DEMOLITION WORK SHALL BE REPAIRED AND REFINISHED TO MATCH EXISTING ADJACENT SURFACES.
4. UTILITIES, ELECTRIC, TELEPHONE, GAS, WATER, SIGNAL AND COMMUNICATIONS SYSTEM DAMAGED AS A RESULT OF THIS WORK SHALL BE RESTORED IN WORKING CONDITION AT CONTRACTOR'S EXPENSE TO THE SATISFACTION OF THE GOVERNMENT.
5. USE EXTREME CARE TO PROTECT ALL EXISTING UNDERGROUND INSTALLATIONS DURING TRENCHING AND EXCAVATION WORK. EXISTING INSTALLATIONS INDICATED ON THE DRAWINGS ARE BASED ON AVAILABLE AS-BUILT DRAWINGS AND VISUAL VERIFICATIONS ONLY.
6. ERECT AND MAINTAIN TEMPORARY BRACING, BARRICADES, SIGNS, AND OTHER MEASURES AS NECESSARY TO PROTECT THE PUBLIC, WORKERS, AND ADJOINING PROPERTY FROM INJURY OR DAMAGE DURING DEMOLITION WORK.
7. LOCATION OF EXISTING UTILITIES ARE SHOWN APPROXIMATELY. FIELD VERIFY EXACT LOCATIONS BEFORE DEMOLITION.
8. SEE SCOPE OF WORK ON SHEET G1 FOR DESCRIPTION OF BID ADDITIVE WORK.
9. ALL METAL SURFACES WITH LEAD PAINT ARE TO BE CLEANED TO BARE METAL BEFORE TORCH CUTTING IN CONFORMANCE WITH APR 8800.3 REQUIREMENTS.,

KEY NOTES

1. REMOVE (E) EQUIPMENT FOUNDATION AND SAWCUT AROUND EXISTING SVS VERTICAL SUPPORT. SEE REFERENCE DRAWING FOR EXISTING FOUNDATION DIMENSIONS AND REBAR LOCATION., EXISTING SVS VERTICAL SUPPORT AND FOUNDATION UNDERNEATH SUPPORT BASE PLATE TO REMAIN. DOWEL NEW FOUNDATION INTO EXISTING VERTICAL SUPPORT FOOTING.
2. INSTALL 18" BLIND PADDLE UPSTREAM OF (E) VALVE. SEE PROJECT SEQUENCE NOTES ON G1 FOR DETAILS.
3. SALVAGE (E) CHEMICAL STORAGE. RELOCATE (E) CHEMICAL STORAGE TO LOCATION PER COTR'S APPROVAL.
4. REMOVE (E) ABANDONED UNDERGROUND GAS PIPING BETWEEN POINTS OF DISCONNECTION. CAP (E) PIPE TO REMAIN. BACKFILL TRENCH AS SPECIFIED FOR PAVED AREAS. SEE PHOTO DETAIL 6 ON SHEET D3 FOR DETAIL.
5. REMOVE (E) FENCE.
6. REMOVE, SALVAGE AND RETURN (E) NOX GAS EMISSION ANALYZER INSIDE (E) SHED. SEE PHOTO DETAIL 4 OF SHEET D3 FOR DETAIL. REMOVE AND SALVAGE (E) CHEMICAL FEED PUMP SERVING (E) CT-1 (HOT WELL) AND (E) CT-2.
7. REMOVE (E) 2" AND ¾" CONDUITS TO (E) NOX SHED.
8. DEMOLITION OF (E) NOX SCRUBBER SYSTEM SHALL NOT PROCEED UNTIL NEW NOX SCRUBBER SYSTEM (BASE BID) IS FULLY FUNCTIONAL WITH ALL NECESSARY COMPONENTS INSTALLED AND TESTED.
9. CUT, CAP AND REMOVE (E) 2" GALVANIZED WATER PIPING TO TANK, SCRUBBER AND HOSE BIBB. REMOVE (E) ABANDONED 2" GALVANIZED WATER PIPE. RECONNECT (E) CHEMICAL FEED NaOH TUBING TO NEW CHEMICAL FEED PUMP. REPLACE (E) WIRE ROPE TRAPEZE HANGER WITH NEW SUPPORT FOR PIPING TO REMAIN. DEMOLITION SHALL OCCUR AFTER THE NEW NOX REDUCTION EMISSION SYSTEM HAS BEEN TESTED AND IN OPERATION.

Approved for Construction
Moffett Field Permit Board
S Frankel
Chief Building Official
Permit No. 11P002

ZONE	LETTER	DESCRIPTION	DRAWN	DATE	APPRVD

REVISIONS

DRAWN J.HO	DATE 3/13/2012	
DESIGNED M.CALLAHAN	DATE 3/13/12	
CHECKED J.XIANG	DATE 3/13/12	
PROJMGR P.WAN	DATE 3/13/12	
REQUESTER R.OLIVARES	DATE 3/13/12	
R&QA	DATE	
SAFETY	DATE	
SUPERVISOR S.FRANKEL	DATE 3/15/12	

REGISTERED PROFESSIONAL ENGINEER MICHAEL S. CALLAHAN MECHANICAL STATE OF CALIFORNIA

NASA
Ames Research Center
Moffett Field, California

STEAM VACUUM SYSTEM NOx EMISSION REDUCTION SYSTEM
DEMOLITION

OVERALL DEMOLITION PLAN

SIZE	CAGE CODE	DWG NO.	REV
D	25307	A334A-1000-D1	A
SCALE NONE		INDEX	SHEET OF

FILE NAME: A334A-1000-D01_1 03-12-2012

60220641

DWG: R:\234A\60220641.0001 (KK11035) NOx Scrubber Engrg Support\500_CAD.Rev3\D\Sheet\A334A---1000-D01_1.dwg Version: 17.1s (LMS Tech) User: rschaef1
DATE: Mar 12, 2012 - 1:23:13 pm

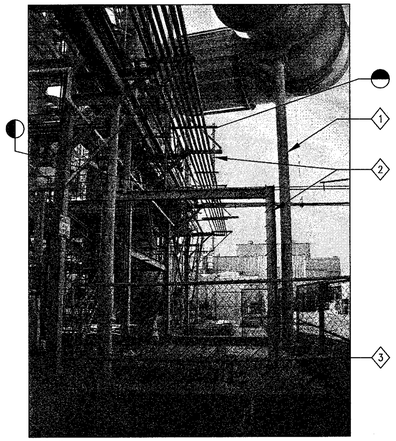

1 DEMOLITION PHOTO 1
D1 D2 SCALE: NTS

DWG NO. A334A-1000-D2 | SH. | REV

SHEET NOTES

KEY NOTES

1. (E) SVS SUPPORT AND CONCRETE SUPPORT PIER FOUNDATION TO REMAIN.
2. REMOVE (E) STRUCTURAL BEAM AND UNISTRUT SUPPORT. PROVIDE DIAGONAL BRACE SUPPORT TO PREVENT EXISTING UTILITIES AND EXISTING PIPE SUPPORT FROM FALLING.
3. REMOVE (E) FOUNDATION AND EQUIPMENT PAD AS NECESSARY FOR THE INSTALLATION OF THE NEW NOX EMISSION REDUCTION SYSTEM. IF (E) FOUNDATION IS TO BE USED, CONTRACTOR SHALL SUBMIT CALCULATIONS AND ANALYSIS FOR NASA'S APPROVAL TO SHOW THE (E) FOUNDATION IS STRUCTURALLY ADEQUATE.

Approved for Construction
Moffett Field Permit Board

Chief Building Official
Permit No. 11P002

ZONE	LETTER	DESCRIPTION	DRAWN	DATE	APPRVD
	1				

REVISIONS

DRAWN J.HO		DATE 3/13/2012
DESIGNED M.CALLAHAN		DATE 3/13/12
CHECKED J.XIANG		DATE 3/13/12
PROJMGR P.WAN		DATE 3/13/12
REQUESTER R.OLIVARES		DATE 3/13/12
R&QA		DATE
SAFETY		DATE
SUPERVISOR S.FRANKEL		DATE 3/15/12
		DATE

REGISTERED PROFESSIONAL ENGINEER MICHAEL S. CALLAHAN M. ENGS MECHANICAL STATE OF CALIFORNIA

Ames Research Center
Moffett Field, California

STEAM VACUUM SYSTEM NOx EMISSION REDUCTION SYSTEM
DEMOLITION

DEMOLITION PHOTOS

SIZE	CAGE CODE		REV
D	25307	A 334A-1000-D2	
SCALE	NONE	INDEX	SHEET OF

FILE NAME: A334A-1000-D02_1 03-12-2012

60220641

DWG: R:\234A\60220641.0001 (K11035) NOx Scrubber Engrg Support\500_CAD.Rev3\D\Sheet\A334A---1000-D02_1.dwg Version: 17.1s (LMS Tech) User: rschaef1
DATE: Mar 12, 2012 - 1:18:36 pm

DWG NO.	SH.	REV
A334A-1000-D3		

SHEET NOTES

1. SEE SHEET G1 FOR BID ADDITIVE.

KEY NOTES

1. NOT USED
2. INSTALL 18" BLIND PADDLE, CLASS 150.
3. REMOVE AND SALVAGE EXISTING GAS EMISSION ANALYZER.
4. REMOVE AND SALVAGE EXISTING CALIBRATION GAS CYLINDERS.
5. NOT USED.
6. PULL OUT ALL (E) CABLES. DEMOLISH (E) PULL BOX.
7. PULL OUT (E) CABLES UP TO THE PULL BOX LOCATED INSIDE BUILDING N234A AND DISPOSE THEM. REMOVE AND CAP EXISTING ELECTRICAL CONDUIT UP TO THE POINT SHOWN ON THE DETAIL 3.
8. REMOVE EXISTING FOUNDATION AND EQUIPMENT PAD AS NECESSARY TO INSTALL (N) NOX EMISSION REDUCTION SYSTEM.
9. REMOVE ABANDONED ELECTRICAL EQUIPMENT.
10. PULL OUT (E) CABLES. REMOVE EXISTING ELECTRICAL CONDUIT.
11. REMOVE AND SALVAGE EXISTING GAS CALIBRATION PANEL.

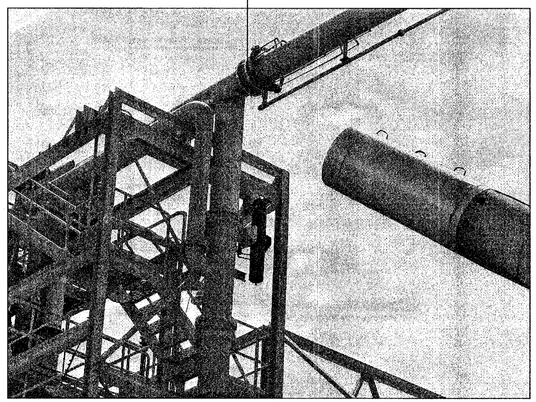

2 DEMOLITION PHOTO 2
D1 | D3 SCALE: NTS

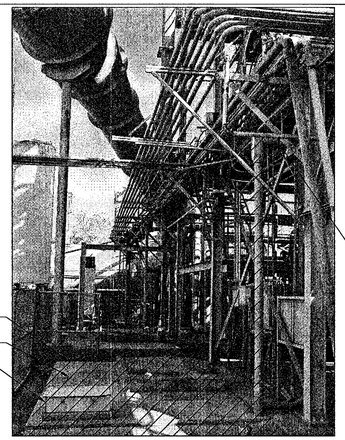

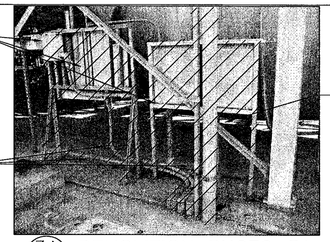

3A DEMOLITION PHOTO 3A
D1 | D3 SCALE: NTS

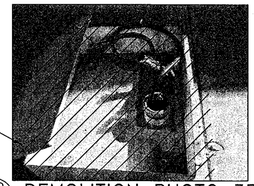

3 DEMOLITION PHOTO 3
D1 | D3 SCALE: NTS

3B DEMOLITION PHOTO 3B
D1 | D3 SCALE: NTS

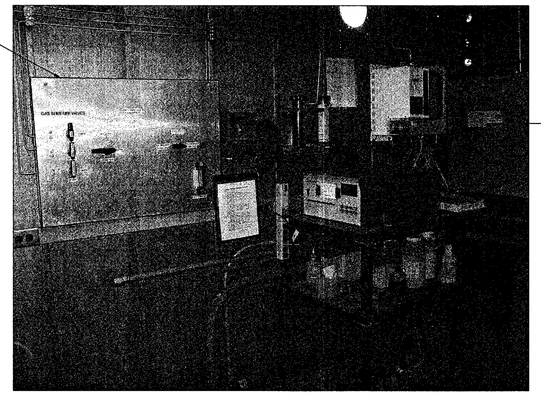

4 EXISTING GAS EMISSION ANALYZER
D1 | D3 SCALE: NTS

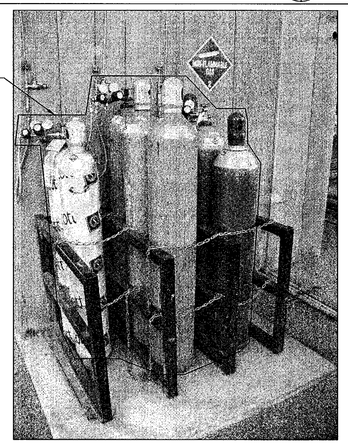

5 EXISTING CALIBRATION GAS CYLINDERS
D1 | D3 SCALE: NTS

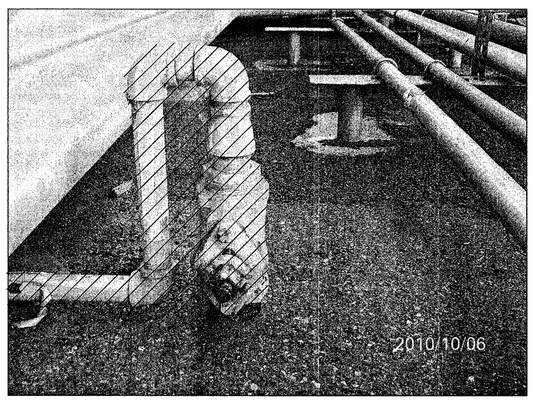

6 EXISTING GAS LINE
D1 | D3 SCALE: NTS

REGISTERED PROFESSIONAL ENGINEER
MICHAEL S. CALLAHAN
No. 23188
MECHANICAL
STATE OF CALIFORNIA
Exp. 6/30/11

Approved for Construction
Moffett Field Permit Board
S Frankel
Chief Building Official
Permit No. 11P002

ZONE	LETTER	DESCRIPTION	DRAWN	DATE	APPRVD
		REVISIONS			

DRAWN J.HO	DATE 3/13/12	Ames Research Center, Moffett Field, California
DESIGNED M.CALLAHAN	DATE 3/13/12	STEAM VACUUM SYSTEM NOx EMISSION REDUCTION SYSTEM
CHECKED J.XIANG	DATE 3/13/12	DEMOLITION
PROJMGR P.WAN	DATE 3/13/12	DEMOLITION PHOTOS
REQUESTER R.OLIVARES	DATE 3/13/12	
R&QA	DATE	
SAFETY	DATE	
SUPERVISOR S.FRANKEL	DATE 3/15/12	

SIZE	CAGE CODE	REV
D	25307	A
SCALE NONE	INDEX	SHEET OF

A334A-1000-D3

FILE NAME: A334A-1000-D03 03-12-2012

60220641

DWG: R:\234A\60220641.0001 (K11035) NOx Scrubber Engrg Support\500_CAD.Rev3\D\Sheet\A334A-----1000-D03.dwg Version: 18.1s (LMS Tech) User: jjho
DATE: Mar 13, 2012 - 10:53:39 am

DWG: R:\234A\60220641.0001 (K11035) NOx Scrubber Engrg Support\500_CAD.Rev3\S\Sheet\A334A---1000-S01.dwg Version: 18.1s (LMS Tech) User: jjho
DATE: Mar 14, 2012 - 1:32:24 pm

DWG NO. A334A–1000–S1 | SH. | REV

STRUCTURAL GENERAL NOTES

1. 1. ALL WORK SHALL BE IN ACCORDANCE WITH ALL FEDERAL, STATE AND LOCAL BUILDING CODES AND SAFETY ORDINANCES IN EFFECT AT THE TIME AND PLACE OF BUILDING.
2. ANY CONFLICTS OR DISCREPANCIES BETWEEN THE DRAWINGS AND SITE CONDITIONS SHALL BE IMMEDIATELY BROUGHT TO THE ATTENTION OF THE COTR AND CORRECTED AS DIRECTED BY THE COTR.
3. CONTRACTOR AGREES THAT HE SHALL ASSUME SOLE AND COMPLETE RESPONSIBILITY FOR JOB SITE CONDITIONS DURING THE COURSE OF CONSTRUCTION OF THIS PROJECT . INCLUDING SAFETY OF ALL PERSONS AND PROPERTY. THIS REQUIREMENT SHALL APPLY CONTINUOUSLY AND SHALL NOT BE LIMITED TO NORMAL WORKING HOURS.
4. NO PIPES OR SLEEVES SHALL PASS THROUGH STRUCTURAL MEMBERS WITHOUT APPROVAL OF CONTRACTING OFFICER UNLESS SHOWN ON STRUCTURAL DRAWINGS.
5. CONCRETE SUB CONTRACTOR SHALL PROVIDE TEMPORARY SHORING AS REQUIRED TO INSURE VERTICAL & LATERAL STABILITY OF SOIL FOR FOUNDATION DURING CONSTRUCTION.
6. ANY CONFLICT OR DISCREPANCY BETWEEN THE DRAWINGS & SPECIFICATION SHALL BE IMMEDIATELY BROUGHT TO THE ATTENTION OF COTR. IN THE CASE OF THE CONFLICT BETWEEN DRAWINGS & SPECIFICATION, DRAWINGS SUPERSEDE THE SPECIFICATION.
7. ALL DEBRIS AND WASTE GENERATED BY THIS PROJECT SHALL BE LEGALLY RECYCLED OR DISPOSED.
8. SAW CUT (E) A.C. FOR NEW FOOTINGS.
9. REPLACE ANY A.C. TO BE DAMAGED AND REMOVE IT DURING CONSTRUCTION.
10. DIMENSION ARE REFERENCE ONLY. CONTRACTOR SHALL FIELD VERIFY ALL EXISTING SIZES, CONDITIONS, MEMBERS ELEVATIONS AND DIMENSIONS BEFORE BEGINNING CONSTRUCTION AND/OR ORDERING MATERIAL.
11. ALL STRUCTURAL WORK AS PART OF DESIGN–BUILD SHALL BE DESIGNED AND STAMPED BY A STRUCTURAL ENGINEER REGISTERED IN STATE OF CALIFORNIA. SUBMIT STAMPED SHOP DRAWINGS AND STAMPED CALCULATIONS TO COTR AND PERMIT REVIEW BOARD FOR APPROVAL.

REINFORCEMENT STEEL

1. REINFORCING BARS SHALL BE IN ACCORDANCE WITH REQUIREMENTS OF ASTM A615, GRADE 60. DEFORMED BARS, EXCEPT #3 BAR GRADE 40.

2. LAP SPLICE LENGTH SCHEDULE:

<u>F'c = 3,000 PSI</u>

<u>BASIC LAP</u>

#4..........................28 IN.
#5..........................36 IN.
#6..........................43 IN.
#7..........................62 IN.

3. CONCRETE COVER:

UNLESS OTHERWISE NOTED, CONCRETE COVERAGE OF REINFORCING BARS SHALL BE AS FOLLOWS:

3" – ALL BARS WHERE CONCRETE IS DEPOSITED DIRECTLY AGAINST EARTH.

2" – FOR #6 AND LARGER BARS WHERE CONCRETE IS EXPOSED TO EARTH AND/OR WEATHER BUT DEPOSITED AGAINST FORMS.

1–1/2" – FOR #5 AND SMALLER BARS FOR SLABS, WALLS, BEAMS, COLUMNS AND EXTERIOR SURFACES EXPOSED TO EARTH OR WEATHER BUT DEPOSITED AGAINST FORMS.

4. ALL REINFORCING STEEL AND EMBEDMENTS TO BE HELD SECURELY IN PLACE PRIOR TO PLACING CONCRETE. PROVIDE SUFFICIENT SUPPORTS TO ALLOW WALKING ON REINFORCEMENT. NO BRICK OR POROUS MATERIAL SHALL BE USED TO SUPPORT REINFORCING.

STRUCTURAL ABBREVIATIONS

℄	CENTER LINE	MAX	MAXIMUM
A.C./AC	ASPHALT CONCRETE	MIN	MINIMUM
A.B.	ANCHOR BOLT	(N)	NEW
B.PL	BASE PLATE	N.S.	NEAR SIDE
BOT	BOTTOM	N.T.S.	NOT TO SCALE
B.O.S	BOTTOM OF STEEL	O.C.	ON CENTER
CJ	CONSTRUCTION JOINT	OEM	ORIGINAL EQUIPMENT MANUFACTURER
CLR	CLEAR	OPNG	OPENING
COL	COLUMN	OPP	OPPOSITE
CONT	CONTINUOUS	PL	PLATE
COTR	CONTRACTING OFFICER'S TECHNICAL REPRESENTATIVE	PLCS.	PLACES
DET	DETAIL	PS	PIPE SUPPORT
DWL	DOWEL	REINF	REINFORCING
DWG	DRAWING	REQ'D	REQUIRED
(E)	EXISTING	SIM	SIMILAR
EA	EACH	SPEC	SPECIFICATION
E.F.	EACH FACE	SPC	SPACING
EMBED	EMBEDMENT	STL	STEEL
EQ	EQUAL	SYMM	SYMMETRICAL
E.W.	EACH WAY	T&B	TOP AND BOTTOM
F.S.	FAR SIDE	TBM	TEMPORARY BENCH MARK
F.F.	FINISH FLOOR	THK	THICK
FTG	FOOTING	T.O.	TOP OF
GA	GAUGE	T.O.F	TOP OF FOOTING
GALV	GALVANIZED	T.O.S	TOP OF STEEL
H.R.	HAND RAIL	T.O.C	TOP OF CONCRETE
HSS	HOLLOW STEEL SECTION	TYP	TYPICAL
HORIZ	HORIZONTAL	UNO	UNLESS NOTED OTHERWISE
HT	HEIGHT	VERT	VERTICAL
LLH	LONG LEG HORIZONTAL	V.I.F.	VERIFY IN FIELD
LLV	LONG LEG VERTICAL	W.W.F.	WELDED WIRE FABRIC
		W.P.	WORK POINT

FOUNDATIONS

1. UNDERLYING BASE OF NATIVE SOIL SHALL BE COMPACTED TO AT LEAST 90 PERCENT OF THE MAXIMUM DRY DENSITY. FOR DEPTH OF AT LEAST 12" UNDER FOOTING PER ASTM D1557.
2. NO CONCRETE SHALL BE POURED IN ANY FOUNDATION UNTIL EXCAVATION HAS BEEN INSPECTED AND APPROVED BY COTR.
3. FOUNDATION DESIGN SHALL BE BASED ON GEOTECHNICAL STUDY DONE BY FUGRO WEST INC. FOR NASA AMES N234A DEAERATOR/FEEDWATER TANK REPLACEMENT PROJECT DATED FEBRUARY 2010.

   MAXIMUM ALLOWABLE BEARING PRESSURE UNDER MAT FOUNDATION:
   a. DEAD LOAD PLUS LIVE LOAD 1,000 PSF.
   b. SEISMIC LOAD COMBINATION WITH DEAD LOAD, 3,200 PSF.

QUALITY CONTROL

1. INSPECTIONS AND TESTING SHALL COMPLY WITH SPECIFICATIONS.
2. ALL INSPECTIONS INCLUDING SPECIAL INSPECTIONS AND CONTINUOUS INSPECTION SHALL BE DONE BY A QUALIFIED TESTING AGENCY AND QUALIFIED INSPECTORS AT THE EXPENSE OF THE CONTRACTOR. GOVERNMENT SHALL BE NOTIFIED IN ADVANCE TO WITNESS ALL THE TESTS. ALL TEST RESULTS DOCUMENTATIONS SHALL BE SUBMITTED TO THE GOVERNMENT.
3. SPECIAL INSPECTION SHALL COMPLY WITH 2007 CBC, CHAPTER 17. SPECIAL INSPECTION SHALL BE PROVIDED FOR THE FOLLOWING USE:

A) WELDING – WELDING SHALL BE DONE IN AN GOVERNMENT APPROVED SHOP. APPROVED FABRICATORS SHALL CONFORM TO CBC 1701. ALL FIELD WELDING SHALL HAVE CONTINUOUS INSPECTION.

B) EPOXY AND EXPANSION TYPE ANCHOR BOLTS.

C) REINFORCING STEEL PLACEMENT.

D) ALL CONCRETE WORK.

DESIGN CRITERIA FOR DESIGN–BUILD

1. APPLICABLE CODE 2007 CALIFORNIA BUILDING CODE, ASCE 7–05
2. SEISMIC DESIGN NON–STRUCTURAL COMPONENTS, CHAPTER 13 & CHAPTER 15 ASCE 7–05

   W_p = WEIGHT
   S_s = 1.5
   S_1 = 0.6
   F_a = 1
   F_V = 1.5
   S_{ds} = 1
   S_{d1} = 0.6
   I = 1
   I_p = 1
   R = (TABLE 15.4–1 OR 15.4–2 ASCE 7–05)
   R_p = (TABLE 13.6–1 ASCE 7–05)

3. WIND DESIGN PER CBC SECTION 1609 OR ASCE 7 CHAPTER 6

   $F_w = q_z G C_f$
   q_z = 0.00256 $K_z K_{zt}$ Kd V I
   G = 0.85
   C_f = SEE FIGURE 6–21 ASCE 7–05
   K_z = SEE TABLE 6–3 ASCE 7–05
   K_{zt} = 1
   K_d = SEE TABLE 6–4 ASCE 7–05
   I = 1
   EXPOSURE B
   V= 85 mph
   OCCUPANCY CATEGORY II

STRUCTURAL STEEL

1. FABRICATION AND CONSTRUCTION SHALL CONFORM TO THE AMERICAN INSTITUTE OF STEEL CONSTRUCTION, MANUAL OF STEEL CONSTRUCTION. ALLOWABLE STRESS DESIGN, SPECIFICATIONS AND CODES, 13TH EDITION.
2. STRUCTURAL STEEL SHAPES, EXCEPT W–SHAPES, BARS AND ROD SHALL CONFORM TO ASTM A36.
3. ALL STEEL PIPES SHALL BE STANDARD PIPE, SCHEDULE 40 (UNLESS INDICATED). CONFORMING TO ASTM A53, GRADE B Fy = 35 KSI
4. HOLLOW STRUCTURAL SECTION (HSS) SHALL BE ASTM A500 GRADE B, Fy = 46 KSI.
5. BOLT HOLES IN STEEL SHALL BE 1/16" LARGER THAN BOLTS, UNLESS OTHERWISE NOTED ON PLANS. ALL BOLT HOLES TO BE DRILLED OR PUNCHED. BURNING OF HOLES SHALL NOT BE PERMITTED.
6. ALL SHOP AND FIELD WELDING PER LATEST EDITION OF AWS, D1.1, STRUCTURAL WELDING CODE. WELDING ELECTRODE – E70XX.
7. DEFECTIVE WELDS SHALL BE GROUND OUT, REPAIRED, AND RE–TESTED AT CONTRACTORS EXPENSE.
8. ALL STRUCTURAL STEEL SHALL BE PRIMED AND PAINTED ACCORDING TO SPECIFICATION.
9. DEFECTIVE WELDS SHALL BE GROUND OUT, REPAIRED, AND RE–TESTED AT CONTRACTORS EXPENSE.
10. WELD LENGTHS SHOWN ARE EFFECTIVE LENGTH PER CODE. WHERE LENGTHS ARE NOT SHOWN, THE WELD SHALL BE FULL LENGTH OF JOINT.
11. ALL WELDING REQUIREMENTS SHOWN OR INDICATED ON THE DRAWINGS MAY BE FIELD OR SHOP WELDED AS REQUIRED FOR EFFICIENT ERECTION, SUBJECT TO THE APPROVAL OF THE COTR.
12. VISUAL INSPECTION IS REQUIRED FOR ALL SHOP WELDING AND SHALL BE PERFORMED BY CERTIFIED WELDING INSPECTOR.
13. CONTINUOUS INSPECTION IS REQUIRED FOR ALL FIELD WELDING AND SHALL BE PERFORMED BY AN INDEPENDENT QUALIFIED INSPECTOR.
14. VISUAL INSPECTION IS REQUIRED FOR ALL FIELD FILLET WELDING PERFORMED BY AN INDEPENDENT QUALIFIED INSPECTOR.
15. ALL FULL PENETRATION WELDING SHALL BE TESTED BY NON–DESTRUCTIVE METHODS (ULTRASONIC OR RADIOGRAPHIC TESTING) BY AN INDEPENDENT QUALIFIED INSPECTOR.
16. FURNISH COPIES OF MILL TEST REPORTS OF ALL STEEL MATERIALS TO THE GOVERNMENT SHOWING CONFORMANCE WITH SPECIFIED ASTM DESIGNATIONS PRIOR TO FABRICATION OF ANY WORK. CERTIFIED LOTS SHALL BE SO IDENTIFIED.

POST–INSTALLED CONCRETE ANCHORS

<u>CHEMICALLY BONDED ANCHORS:</u>

1. ALL HOLES FOR POST–INSTALLED ANCHORS SHALL BE DRILLED, CLEANED AND PREPARED IN ACCORDANCE WITH MANUFACTURER'S RECOMMENDATIONS AND THE APPLICABLE ICC–ESR. WHERE AN ANCHOR DOES NOT SET PROPERLY, OR FAILS A TENSION TEST, OR REINFORCEMENT IS ENCOUNTERED DURING DRILLING, THE DRILLED HOLE MAY NOT BE REUSED. ABANDONED HOLES SHALL BE FILLED WITH NON–SHRINK GROUT. THE MINIMUM SPACING BETWEEN AN ABANDONED HOLE AND A DRILLED HOLE USED FOR A POST–INSTALLED ANCHOR SHALL NOT BE LESS THAN 1–1/2" ANCHOR DIAMETERS UNLESS OTHERWISE APPROVED BY THE COTR. IF THE ANCHOR OR DOWEL MAY NOT BE SHIFTED AS NOTED ABOVE, THE ENGINEER OF RECORD WILL DETERMINE A NEW LOCATION. LOCATE REINFORCEMENT, AVOID CUTTING (E) REBAR AND CONFIRM FINAL LOCATIONS PRIOR TO FABRICATING PLATES, MEMBERS, OR OTHER STEEL ASSEMBLIES ATTACHED WITH ADHESIVE ANCHORS.
2. COMPLY WITH 2007 CBC AND SHALL HAVE ESR REPORT NUMBER.
3. ADHESIVE ANCHOR SHALL BE INSTALLED IN ACCORDANCE WITH MANUFACTURERS RECOMMENDATION & REQUIREMENT & THE PRODUCT ICC REPORT.
4. SPECIAL INSPECTION OF ADHESIVE ANCHOR SHALL BE IN ACCORDANCE WITH CBC SECTION 1701. ITEMS TO BE REPORTED ARE:
   – ADHESIVE PRODUCT INCLUDING THE NAME AND EXPIRATION DATE.
   – ANCHOR BOLT OR REBAR MATERIAL, GRADE DIAMETER, LENGTH & CLEANLINESS.
   – DRILL BIT DIAMETER.
   – HOLE DEPTH AND CLEANLINESS.
5. THE TESTING OF POST–INSTALLED ANCHOR SHALL BE DONE IN THE PRESENCE OF THE SPECIAL INSPECTOR AND A REPORT OF THE TEST RESULT SHALL BE SUBMITTED TO THE COTR.
6. POST–INSTALLED ANCHOR HAVE CONTINUOUS INSPECTION AS EXPLAINED IN CBC 2007 SECTION 1702.1.
7. A TENSION TEST IS REQUIRED ON 20% OF ALL BOLTS FOR EACH CONNECTION PLATE. IF ANY OF THE BOLTS FAIL THE TEST, 100% OF THE BOLTS SHALL BE TESTED. TEST LOCATIONS SHALL BE SELECTED BY THE COTR.

TENSION TEST LOADS (POUNDS)
HILTI HIT–RE 500 SD (ICC–ES ESR 2322)
CRACKED CONCRETE, SEISMIC, CONDITION B

NOMINAL ANCHOR DIAMETER	EDGE DISTANCE (INCHES)	EMBEDMENT DEPTH, h_{ef} (INCHES)	NORMAL–WEIGHT CONCRETE f'_c =3000 psi
			CARBON STEEL
5/8" BOLT	6	5	8,461
5/8" BOLT	12	8	10,486
3/4" BOLT	12	6 3/4	15,507
3/4" BOLT	12	12	15,520
1" BOLT	12	12	26,436

CONCRETE

1. CONCRETE SHALL DEVELOP THE MINIMUM COMPRESSIVE STRENGTH OF 3000 PSI AT 28 DAYS (MINIMUM F'C) WHEN TESTED IN ACCORDANCE WITH ASTM C39.
2. PORTLAND CEMENT SHALL CONFORM TO ASTM C–150 TYPE II LOW ALKALI.
3. PRIOR TO PLACING CONCRETE. THE CONTRACTOR SHALL ENSURE THAT ALL EMBEDMENTS. INCLUDING ANCHOR BOLTS, ARE PROPERLY LOCATED AND SECURELY TIED IN PLACE.
4. DIMENSIONAL TOLERANCE FOR ALL CONCRETE WORK SHALL BE WITHIN ±1/8" OF DIMENSION SHOWN ON DRAWINGS. TOP OF FOOTING ELEVATIONS SHALL BE WITHIN ±1/16 OF ELEVATIONS SHOWN ON DRAWINGS. U.O.N.

Approved for Construction
Moffett Field Permit Board
Chief Building Official
Permit No. 11P002

ZONE	LETTER	DESCRIPTION	DRAWN	DATE	APPRVD

REVISIONS

DRAWN F.BONALDI	DATE 3/14/12	
DESIGNED A.FIROUZI	DATE 3/14/12	
CHECKED N.SHAH	DATE 3/14/12	
PROJMGR P.WAN	DATE 3/14/12	
REQUESTER R.OLIVARES	DATE 3/14/12	
R&QA	DATE	
SAFETY	DATE	
SUPERVISOR S.FRANKEL	DATE 3/15/12	

Ames Research Center
Moffett Field, California

STEAM VACUUM SYSTEM NOx EMISSION REDUCTION SYSTEM
<u>STRUCTURAL</u>
STRUCTURAL NOTES AND ABBREVIATIONS

SIZE D | CAGE CODE 25307 | A334A–1000–S1 | REV
SCALE AS NOTED | INDEX | SHEET | OF

FILE NAME: 234A–S01 03–12–2012

60220641

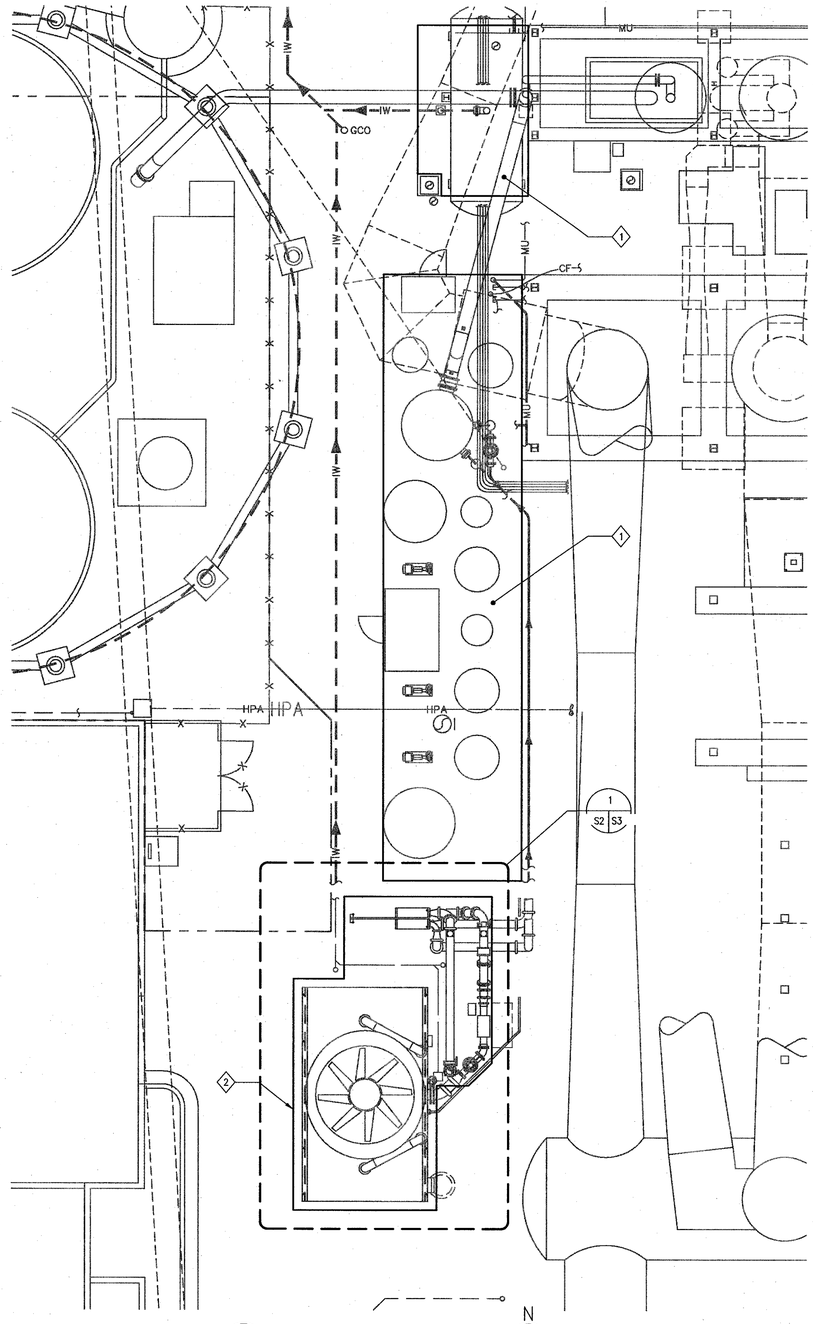

1 FOUNDATION PLAN
SCALE: 1/8" = 1'-0"

N

1/8"=1' 0 4 8 16 24

REGISTERED PROFESSIONAL ENGINEER
AZITA FIROUZI
No. 3535
STRUCTURAL
STATE OF CALIFORNIA

DWG NO.	SH.	REV
A334A-1000-S2		

SHEET NOTES

1. FOR STRUCTURAL GENERAL NOTES SEE SHEET S1.
2. ALL STRUCTURAL WORK SHALL BE DESIGNED AND STAMPED BY A STRUCTURAL ENGINEER REGISTERED IN THE STATE OF CALIFORNIA. SUBMIT STAMPED SHOP DRAWINGS AND STAMPED CALCULATIONS TO COTR AND PERMIT REVIEW BOARD FOR APPROVAL.

KEY NOTES

1. NOx EMISSION REDUCTION SYSTEM FOUNDATION DESIGN SHALL BE DESIGN BUILD BY CONTRACTOR AND SUBMITTED TO NASA FOR APPROVAL.
2. COOLING TOWER, HEAT EXCHANGER AND PIPE SUPPORTS SHALL BE ON ONE MONOLITHIC FOUNDATION (IF REQUIRED BY THE NOX EMISSION SYSTEM) AND SHALL BE DESIGN BUILD BY CONTRACTOR AND SUBMITTED TO NASA FOR APPROVAL.

Approved for Construction
Moffett Field Permit Board

Chief Building Official
Permit No. 11P002

ZONE	LETTER	DESCRIPTION	DRAWN	DATE	APPRVD

REVISIONS

DRAWN F.BONALDI	DATE 3/14/12	
DESIGNED A.FIROUZI	DATE 3/14/12	
CHECKED A. Firouzi for N.SHAH	DATE 3/14/12	
PROJMGR P.WAN	DATE 3/14/12	
REQUESTER R.OLIVARES	DATE 3/14/12	
R&QA	DATE	
SAFETY	DATE	
SUPERVISOR S.FRANKEL	DATE 3/15/12	
	DATE	

Ames Research Center
Moffett Field, California

STEAM VACUUM SYSTEM NOx EMISSION REDUCTION SYSTEM
STRUCTURAL

FOUNDATION PLAN

SIZE	CAGE CODE		REV
D	25307	A 334A-1000-S2	
SCALE	NONE	INDEX	SHEET OF

FILE NAME: A334A-S2.DWG_1 03-12-2012

60220641

DWG: R:\234A\60220641.0001 (K11035) NOx Scrubber Engrg Support\500_CAD.Rev3\S\Sheet\A334A---1000-S02_1.dwg Version: 18.1s (LMS Tech) User: jjho
DATE: Mar 14, 2012 - 1:32:57 pm

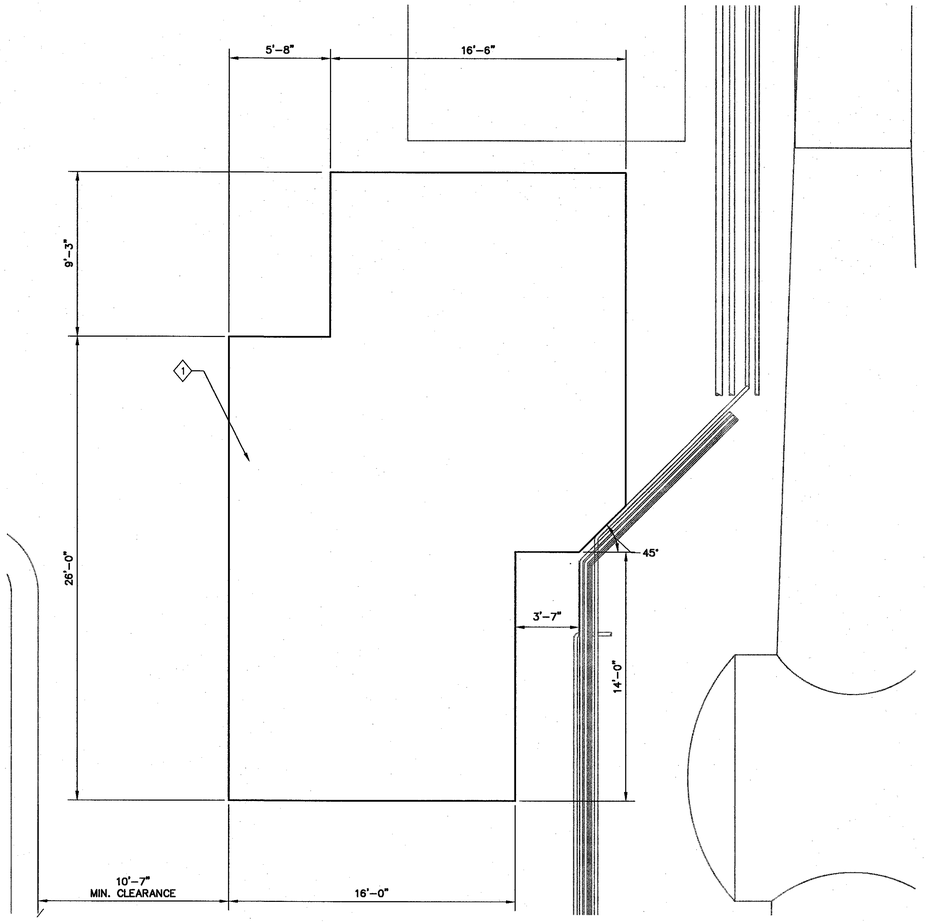

1 S2 S3 ENLARGED FOUNDATION PLAN
SCALE: 1/4" = 1'-0"

1/4"=1' 0 2 4 8 12

SHEET NOTES

1. FOR STRUCTURAL GENERAL NOTES SEE SHEET S1.
2. SAW CUT (E) A.C. FOR NEW FOUNDATION.
3. AFTER CONSTRUCTION, REPAIR (E) DAMAGED A.C. MATCH EXISTING.

KEY NOTES

1 THIS REPRESENT THE OUTLINE OF THE SPACE AVAILABLE FOR THE INSTALLATION OF THE COOLING TOWER, HEAT EXCHANGER, PIPE SUPPORTS, ASSOCIATED PIPING AND FOUNDATIONS. HOWEVER, THIS SPACE MAY ALSO BE USED FOR THE NOX EMISSION REDUCTION SYSTEM IF COOLING TOWER AND HEAT EXCHANGER IS NOT REQUIRED.

REGISTERED PROFESSIONAL ENGINEER ADITA FIROUZI No. 3635 STRUCTURAL STATE OF CALIFORNIA

Approved for Construction
Moffett Field Permit Board
Chief Building Official
Permit No. 11P002

ZONE	LETTER	DESCRIPTION	DRAWN	DATE	APPRVD
REVISIONS					

DRAWN F.BONALDI	DATE 3/13/12	Ames Research Center, Moffett Field, California
DESIGNED A.FIROUZI	DATE 3/14/12	STEAM VACUUM SYSTEM NOx EMISSION REDUCTION SYSTEM
CHECKED N.SHAH	DATE 3/14/12	STRUCTURAL
PROJMGR P.WAN	DATE 3/13/12	ENLARGED FOUNDATION PLAN
REQUESTER R.OLIVARES	DATE 3/12/12	
R&QA	DATE	
SAFETY	DATE	
SUPERVISOR S.FRANKEL	DATE 3-13-12	

SIZE	CAGE CODE	DWG NO.	REV
D	25307	A334A-1000-S3	
SCALE NONE	INDEX	SHEET	OF

FILE NAME: A334A-S3_1.DWG 03-12-2012

60220641

DWG: R:\234A\60220641.0001 (K11035) NOx Scrubber Engrg Support\500_CAD.Rev3\S\Sheet\A334A---1000-S03_1.dwg Version: 18.1s (LMS Tech) User: jjho
DATE: Mar 13, 2012 - 10:57:11 am

MECHANICAL GENERAL NOTES

1. CONTRACT DOCUMENTS INCLUDE ALL DRAWINGS AND PROJECT SPECIFICATION SECTIONS. REFER TO SHEET G1 FOR INDEX OF DRAWINGS AND SPECIFICATIONS.

2. SCOPE OF WORK: PROVIDE ALL SUPERVISION, LABOR, EQUIPMENT, TOOLS, MATERIALS, INSTALLATION AND TESTING TO COMPLETE THE WORK AS INDICATED FOR A COMPLETE OPERATING INSTALLATION. COORDINATE ALL TRADES AND DISCIPLINES TO MEET THE PROJECT DESIGN, CONSTRUCTION, SCHEDULE AND PERFORMANCE REQUIREMENTS. CONTRACT DOCUMENTS DO NOT INDICATE MEANS, METHODS, PROCEDURES OR SEQUENCE OF CONSTRUCTION. TAKE NECESSARY PRECAUTIONS TO MAINTAIN AND INSURE THE INTEGRITY OF THE EXISTING STRUCTURE AND GOVERNMENT EQUIPMENT DURING CONSTRUCTION. DESIGN, CONSTRUCT AND MAINTAIN ALL SAFETY DEVICES, INCLUDING SHORING AND TEMPORARY BRACING AND SUPPORTS. BEFORE PERFORMING WORK, BECOME FULLY ACQUAINTED WITH JOB CONDITIONS AFFECTING INSTALLATION. COMPLETE SCOPE INCLUDES BUILD-TO-PRINT ELEMENTS AS LISTED BELOW, AND DESIGN-BUILD FOR THE REMAINDER OF WORK.

3. BUILD-TO-PRINT SCOPE OF WORK:
   A) EXTEND 18" SVS EFFLUENT PIPE BETWEEN EXISTING CAPPED ELBOW AND INLET OF NEW GAS COOLING COLUMN.

   B) FABRICATE AND INSTALL BUILT-TO-PRINT ITEMS OF WORK AS DETAILED IN BID DOCUMENTS

4. CODE COMPLIANCE: INSTALL MECHANICAL SYSTEMS PER APPLICABLE CODES AND STANDARDS LISTED ON SHEET G1.

5. SAFETY: PROTECT WORKERS AND VISITORS OF WORK AREA DURING ENTIRE CONSTRUCTION PERIOD. PROTECT GOVERNMENT PERSONNEL ADJACENT TO WORK AREA IN ACCORDANCE WITH ALL NATIONAL, STATE AND LOCAL SAFETY ORDINANCES. SEE SHEET G1 FOR ADDITIONAL SAFETY REQUIREMENTS.

6. SCHEDULE: PREPARE AND SUBMIT PROPOSED CONSTRUCTION WORK SCHEDULE WITH PROPOSED SHUTDOWNS TO COTR FOR APPROVAL. WORK SCHEDULE SHALL BE IN ACCORDANCE WITH PROJECT SEQUENCING WHERE INDICATED ON PLANS. REFER TO SHEET G1 FOR SCHEDULE REQUIREMENTS. SCHEDULE SHALL INCLUDE APPROXIMATE ON-SITE DELIVERY DATES FOR CONSTRUCTION MATERIALS OR EQUIPMENT, CONDUCT A JOBSITE MEETING WITH THE USERS PRIOR TO START OF DEMOLITION OR CONSTRUCTION OPERATIONS. PLAN WORK SO AS NOT TO INTERFERE NORMAL BUSINESS OPERATIONS OF FACILITY USERS. NOTIFY COTR IF CONSTRUCTION OR DELIVERY DELAYS MIGHT AFFECT USER ACTIVITIES.

7. DISCREPANCIES AND OMISSIONS: NOTIFY COTR OF ALL DISCREPANCIES AND OMISSIONS ON PLANS AND SPECIFICATIONS, OR CONFLICTS WITH EXISTING CONDITIONS. SUBMIT ALL REQUESTS FOR MODIFICATION TO THE PLANS & SPECIFICATIONS IN WRITING TO THE COTR. OBTAIN APPROVAL OF COTR BEFORE PROCEEDING WITH ANY ELEMENT WHICH DIFFERS FROM THE CONSTRUCTION DOCUMENTS.

8. SUBMITTALS: SUBMIT ALL REQUIRED SUBMITTALS TO COTR FOR APPROVAL PRIOR TO PURCHASE AND START OF RELATED WORK. SUBMIT PRODUCT DATA FOR ITEMS LISTED IN MECHANICAL EQUIPMENT LIST. SEE CONTRACT DOCUMENTS FOR ADDITIONAL SUBMITTAL REQUIREMENTS. COTR SHOULD OBTAIN ENGINEER REVIEW OF TECHNICAL SUBMITTALS.

9. RECORD DRAWINGS: RECORD "AS-BUILT" INFORMATION ON ALL EXISTING SERVICES UNCOVERED DURING CONSTRUCTION, AND ALL SERVICES BEING INSTALLED. KEEP RECORD DRAWING SET CLEAN AND IN GOOD CONDITION AT THE JOBSITE. MAINTAIN SET CURRENT WITH INFORMATION AS IT BECOMES AVAILABLE. "AS-BUILT" DRAWING SET SHALL BE RED-LINED TO SCALE TO REFLECT ALL APPROVED CHANGES TO DESIGN DRAWINGS. RECORD 13 DIGIT NASA EQUIPMENT NUMBER ON ALL (E) EQUIPMENT TO BE REMOVED FROM SERVICE. SUBMIT RECORD SET OVER TO COTR PRIOR TO JOB COMPLETION AND PROJECT CLOSEOUT.

10. EXISTING CONDITIONS: PLAN DIMENSIONS FOR EXISTING CONDITIONS ARE FOR REFERENCE ONLY. FIELD VERIFY ALL EXISTING SIZES, CONDITIONS, ELEVATIONS AND DIMENSIONS BEFORE ORDERING MATERIALS. NOTIFY COTR OF ANY FIELD CONDITIONS THAT CONFLICT WITH THESE PLANS.

11. EXISTING STRUCTURAL: CUTTING, DRILLING OR MODIFYING ANY EXISTING STRUCTURAL MEMBERS IS FORBIDDEN WITHOUT PRIOR APPROVAL FROM COTR. DO NOT USE EXISTING SVS STRUCTURE TO HOIST EQUIPMENT OR MATERIALS.

12. COORDINATION: COORDINATE WORK AND INSTALLATION BETWEEN ALL TRADES AND WORKMEN. INSTALL ALL WORK CLEAR OF OTHER WALLS, EQUIPMENT AND STRUCTURES. COORDINATE ELECTRICAL POWER SOURCES AND REQUIREMENTS FOR MECHANICAL EQUIPMENT AND MOTORIZED DEVICES, INCLUDING CONTROLS.

13. PLAN DIMENSIONS: FIELD VERIFY ALL DIMENSIONS OF EXISTING CONDITIONS. DO NOT SCALE DIMENSIONS FROM DRAWINGS. WRITTEN DIMENSIONS SHALL GOVERN. DETAILS AND ENLARGED PLANS SHALL GOVERN OVER PLANS AND ELEVATIONS. IF UNABLE TO LOCATE DIMENSIONS FOR ANY ITEM OF WORK, CONSULT THE COTR PRIOR TO CONSTRUCTION.

14. MATERIALS: INSTALL ALL NEW EQUIPMENT AND MATERIAL, UNLESS IDENTIFIED AS EXISTING (E). PIPE SUPPORTS AND MISCELLANEOUS STRUCTURAL STEEL: HOT-DIPPED GALVANIZED FOR NEW WORK LOCATED OUTDOORS AND EXPOSED TO WEATHER PER ASTM A123/A123M. TOUCH UP CUT OR ABRAIDED SURFACES WITH ZINC OXIDE PRIMER, OR APPROVED GALVANIZING REPAIR COMPOUND.

15. APPROVED MANUFACTURERS: MANUFACTURERS NAMED IN CONSTRUCTION DOCUMENTS REFER TO ALL MANUFACTURERS FOR SIMILAR PRODUCTS. MANUFACTURERS WITH PRODUCTS EQUIVALENT TO NAMED PRODUCT WILL BE CONSIDERED. DEMONSTRATE EQUIVALENCY IN MATERIAL, DIMENSIONS, RATINGS, FUNCTION AND APPLICATION:
   - ANCHOR BOLTS: HILTI, RAMSET/REDHEAD, SIMPSON. PRODUCTS MUST HAVE EQUIVALENT RATED LOADS PER ICC-ES EVALUATION REPORT.
   - METAL FRAMING CHANNEL, PIPE GUIDES, PIPE CLAMPS: COOPER B-LINE, UNISTRUT, POWERSTRUT. "B-LINE" REFERS TO COOPER B-LINE.
   - PRESSURE GAUGES: ASHCROFT, CROSBY, LONGEGAN, TAYLOR, TRERICE, U.S. GAUGE.

16. MECHANICAL IDENTIFICATION: IDENTIFY NEW SYSTEMS PER ASME A13.1. INCLUDE DIAGRAM AND LISTING OF EQUIPMENT AND VALVES. COLOR CODE (PAINT) OUTSIDE SURFACE OF PIPING.

17. MOTORS: PREMIUM EFFICIENCY PER NEMA MG-1. INVERTOR-READY OR INVERTOR DUTY MOTOR FOR MOTORS WITH VFD DRIVE

18. EQUIPMENT INSTALLATION: INSTALL ALL EQUIPMENT PER MANUFACTURER'S RECOMMENDATIONS AND WRITTEN INSTRUCTIONS, AND IN ACCORDANCE WITH LISTING REQUIREMENTS. SUPPORT AND ANCHOR ALL EQUIPMENT. PROVIDE MINIMUM SERVICE AND REPAIR CLEARANCES. INSTALL PIPE REDUCERS AND DUCT TRANSITIONS WHERE REQUIRED FOR FINAL CONNECTION TO EQUIPMENT.

19. BASIS OF DESIGN: EQUIPMENT LOCATION, AND SERVICE ACCESS CLEARANCE INDICATED ON PLANS WERE SELECTED AS ENGINEERED BASIS OF DESIGN. ACTUAL SPACE REQUIREMENTS MAY VARY FROM DESIGN DEPENDING ON PURCHASED EQUIPMENT. IF APPROVED EQUIPMENT DIFFERS FROM THAT ILLUSTRATED ON PLANS, PROVIDE ALL ADJUSTMENTS REQUIRED FOR A FULLY FUNCTIONAL SYSTEM, AND COORDINATE ALL CONNECTING SERVICES WITHOUT ADDITIONAL COST TO GOVERNMENT.

20. EQUIPMENT PADS: PROVIDE REINFORCED CONCRETE EQUIPMENT HOUSEKEEPING PADS PER CRITERIA LISTED ON STRUCTURAL DOCUMENTS FOR ALL BASE MOUNTED EQUIPMENT, UON. FORM 1" CHAMFER ON ALL TOP EDGES. MINIMUM PAD HEIGHT IS 4" ABOVE FINISHED GRADE, UON. EXTEND PAD MINIMUM 3" BEYOND FOOTPRINT

21. SUPPLEMENTAL STEEL: ATTACH ANCHORS, SUPPORTS AND BRACING FOR EQUIPMENT AND PIPES DIRECTLY TO CONCRETE OR STRUCTURAL STEEL ONLY. DO NOT ATTACH TO EXISTING SVS PLENUM SYSTEM FRAMING. PROVIDE SUPPLEMENTAL STRUCTURAL STEEL AND CONNECTIONS AS NEEDED FOR SUPPORT.

22. ANCHOR BOLTS: SEE POST-INSTALLED CONCRETE ANCHOR SPECIFICATIONS AND REQUIREMENTS ON SHEET S1. ANCHOR ROD: TYPE 316 STAINLESS STEEL.

23. PUMP INSTALLATION: PROVIDE AUTOMATIC AIR VENT ON TOP OF ALL HORIZONTAL SPLIT CASE PUMPS. PROVIDE PRESSURE GAUGE AND ASME UV STAMPED PRESSURE RELIEF VALVE AT DISCHARGE OF ALL PUMPS. PROVIDE CURRENT SET PRESSURE TEST RECORDS AND FLOW CAPACITY CALCULATIONS DOCUMENTING COMPLIANCE WITH ASME SECTION VIII AND B31.3 REQUIREMENTS AS APPROPRIATE.

24. BACKFLOW PREVENTION: REDUCED PRESSURE ZONE TYPE BACKFLOW PREVENTION ASSEMBLY, CPC APPROVED, FOUNDATION FOR CROSS CONNECTION CONTROL AND RESEARCH (FCCCHR) LISTED, ASSE 1013. DIRECT DISCHARGE TO AREA WHERE WATER IS NOT A SLIP HAZARD. TEST BFP AFTER INSTALLATION. SUBMIT CERTIFIED TEST REPORT.

25. FLOOR SINK (IF COOLING TOWER IS NEEDED): 8" DEEP CAST IRON RECEPTOR WITH ACID-RESISTANT COATED INTERIOR, 3" NO-HUB OUTLET, 12" SQUARE NICKEL BRONZE RIM, 1/2 CAST IRON PERFORATED GRATE, ALUMINUM DOME BOTTOM STRAINER, J.R. SMITH #3120Y. MOUNT RIM 2" ABOVE FINISH GRADE. PROVIDE PIPE OUTLET ADAPTOR TO PVC DWV P-TRAP FITTING.

26. FLOOR SINKS (WASTE TANK): 6" DEEP STAINLESS STEEL RECEPTOR, 3" INTEGRAL POLYPROPYLENE PIPE OUTLET, 12" SQUARE RIM, 3/4 STAINLESS STEEL PERFORATED GRATE, SECONDARY STRAINER, ORION #FS-790-BL. MOUNT RIM 2" ABOVE FINISH GRADE. PROVIDE PIPE OUTLET ADAPTOR TO PVC DWV P-TRAP FITTING.

27. DEMOLITION: REMOVE FROM THE PREMISES AND DISPOSE OF ALL ITEMS IDENTIFIED TO BE REMOVED OR DEMOLISHED, UNLESS OTHERWISE NOTED. REMOVE PIPING TO POINT OF DISCONNECTION SHOWN ON PLANS. COVER OPEN ENDS TO PREVENT ENTRY OF DIRT OR DEBRIS INTO PIPING WHICH HAS BEEN CUT.

28. EXISTING FINISHES: PROTECT ALL EXISTING STRUCTURES AND FINISHES FROM ACCIDENTAL DAMAGE DUE TO CONSTRUCTION ACTIVITIES. PATCH, FILL, AND REPAIR ALL EXISTING FINISHES WHERE DAMAGED BY CONSTRUCTION. REPAIR SHALL MATCH EXISTING OR NEW ADJACENT FINISHES.

29. PROTECTION: PROTECT IN PLACE ALL PIPING AND GOVERNMENT EQUIPMENT NOT TO BE MODIFIED BY THE WORK.

30. LIGHTNING PROTECTION: PROVIDE LIGHTNING PROTECTION SYSTEM FOR NOX COLUMNS, AND COOLING TOWER (IF COOLING TOWER IS NEEDED) PER NFPA 780.

31. EXISTING UTILITIES. PROTECT ALL UNDERGROUND UTILITIES. DO NOT OPERATE ANY UTILITIES INCLUDING, BUT NOT LIMITED TO, VALVES AND SWITCHES WITHOUT PRIOR PERMISSION FROM COTR. LIMIT SURFACE LOADING TO 8,000 LBS PER SQUARE FOOT IN PAVEMENT AREAS, AND 2,000 LBS PER SQUARE FOOT FOR NON-PAVED AREAS.

32. EARTHWORK: BEFORE EARTHWORK IS STARTED, LOCATE UNDERGROUND UTILITIES BY ELECTROMAGNETIC OR RADIO FREQUENCY LINE LOCATORS, AND OBTAIN SITE UTILITY INFORMATION FROM COTR. PROVIDE SPILL PREVENTION AND CONTROL PER SAFETY PLAN. IF UTILITY PIPES ARE BROKEN, NOTIFY COTR IMMEDIATELY. IF SATURATED SOILS ARE ENCOUNTERED DURING EXCAVATION, STOP WORK AND COORDINATE WITH COTR FOR GOVERNMENT SAMPLING AND ANALYSIS OF THE SOIL. LEGALLY DISPOSE OF UNSATISFACTORY SOIL OFF GOVERNMENT PROPERTY.

33. SHORING AND BRACING: SHORE EXCAVATIONS OVER 5 FEET, AND WHERE SUBJECT TO VIBRATION FROM VEHICULAR TRAFFIC. SHORE AND BRACE EXCAVATIONS OVER 2 FEET, IF LEFT OPEN FOR MORE THAN 5 DAYS. CONFORM TO OSHA 29 CFR PART 1926.652(c). DESIGN SHORING FOR EXCAVATIONS OVER 12 FEET DEEP BY CIVIL ENGINEER REGISTERED IN STATE OF CALIFORNIA, AND SUBMIT DESIGN TO COTR FOR APPROVAL.

34. TRENCHING: GRADE BOTTOM OF TRENCHES CAREFULLY. DIG BELL HOLES AND DEPRESSIONS FOR JOINTS AFTER TRENCH BOTTOM IS GRADED. SEQUENCE TRENCHING TO MINIMIZE TIME TRENCH IS OPEN.

35. BACKFILLING: BACKFILL TRENCHES PROMPTLY AFTER REMOVAL OF FORMWORK, COMPLETION OF TESTING, INSPECTION AND APPROVAL OF UNDERGROUND UTILITIES, AND REMOVAL OF DEBRIS. PLACE BACKFILL IN LAYERS OF 8" MAX. DEPTH, MOISTEN AND AERATE TO PROVIDE OPTIMUM MOISTURE CONTENT, AND THEN COMPACT TO SPECIFIED DENSITY. DO NOT PLACE BACKFILL ON SURFACES THAT ARE MUDDY, FROZEN, ICY OR CONTAIN FROST. COMPACT WITH POWER-DRIVEN HAND TAMPERS WITHIN HORIZONTAL DISTANCE EQUAL TO DEPTH OF BACKFILL.

36. CONTROLS: CONTROL DIAGRAMS ARE SCHEMATIC REPRESENTATIONS ONLY. PROVIDE ALL ADDITIONAL CONTROL ITEMS NECESSARY TO MEET THE FUNCTIONAL REQUIREMENTS OF THE SEQUENCE OF OPERATION, AND SPECIFICATIONS. PROVIDE COMPLETE SYSTEM WHICH IS FUNCTIONAL IN ALL RESPECTS. TEST FOR CONFORMANCE TO THE PERFORMANCE REQUIREMENTS. COMMISSION INTO OPERATION, AND CALIBRATE UNDER OPERATING CONDITIONS.

37. TESTING & COMMISSIONING: SUBMIT AGENCY QUALIFICATIONS. PROVIDE FUNCTIONAL TEST OF ALL NEW EQUIPMENT AND CONTROLS PRIOR TO CONNECTION WITH EXISTING PLANT. PROVIDE SUPERVISED STARTUP OF COOLING TOWER AND NOX TREATMENT SYSTEM BY FACTORY REPRESENTATIVE. SCHEDULE STARTUP AND ACCEPTANCE TEST WITH SVS BOILER PLANT AND ARCJET PERSONNEL. TEST PIPING PER PIPING GENERAL NOTES.

38. COOLING TOWER WATER TREATMENT: (IF COOLING TOWER IS NEEDED) PROVIDE COMPLETE AUTOMATIC BLOWDOWN SYSTEM WITH CONTROLLER AND VALVE. PROVIDE AUTOMATIC WATER MINERAL CONVERSION SYSTEM TO PRODUCE A MINERAL POWDER WHICH DOES NOT STICK TO SURFACES SO SCALE IS NOT FORMED, AND ENCAPSULATES BACTERIA TO PREVENT REPRODUCTION. RESULTANT MINERAL POWDER IS REMOVABLE THROUGH BLOWDOWN, FILTRATION, OR SETTLING IN BASIN FOR ANNUAL REMOVAL. SEE SPECIFICATION OF MINERAL CONVERSION SYSTEM.

39. WATER TREATMENT UNIT (WTU): (IF COOLING TOWER IS NEEDED) MINERAL CONVERSION ASSEMBLY, DOLPHIN MODEL SAFETY RELIEF VALVES G3080-PVC BY CLEARWATER SYSTEMS CORPORATION, OR APPROVED EQUAL. 8" SCH 80 PIPE SIZE PVC BODY (140 LB.), FLANGED CONNECTIONS, 1700 GPM MINIMUM FLOW RATE. TRANSFORMER PANEL: 480V, 1ø, 60 HZ (2400 VOLT-AMP CONSUMPTION), MOUNTED (84 LB.) NEAR COIL-PIPE ASSEMBLY.

40. GROUNDING: GROUND NON-CURRENT-CARRYING METAL PARTS OF FIXED, PORTABLE, AND MOBILE EQUIPMENT AND ASSOCIATED FENCES, HOUSINGS, ENCLOSURES AND SUPPORTING STRUCTURES PER NEC.

41. TITLE 24 (CALIFORNIA CODE OF REGULATIONS TITLE 24 PART 6) COMPLIANCE: CALIFORNIA ENERGY CODE REQUIREMENTS DO NOT APPLY TO THIS PROJECT. THIS PROJECT SUPPORTS A CRITICAL PROCESS LOAD WHICH IS NOT ASSOCIATED WITH COMFORT CONDITIONING OR DOMESTIC WATER HEATING.

42. O&M MANUAL: PROVIDE FIVE (6) COPIES OF OPERATION AND MAINTENANCE MANUAL, INCLUDING PRODUCT DATA AND CERTIFICATIONS FOR ALL NEW NON-GFE EQUIPMENT.

43. PRESSURE VESSELS: INSTALL ASME SAFETY RELIEF VALVE ON ALL PRESSURIZED ASME OR NON-ASME VESSELS. INSTALL PRESSURE GAGES OR PRESSURE AND TEMPERATURE TEST PORTS AT INLET AND OUTLET OF ALL PRESSURIZED ASME OR NON-ASME VESSELS. INSTALL FULL SIZE FLOW BALANCING TEES AT DISCHARGE OF ALL SAFETY RELIEF VALVES.

44. THERMAL RELIEF: INSTALL ASME RELIEF VALVE FOR RELIEF OF PRESSURE DUE TO THERMAL EXPANSION IN ANY SECTION OF PIPE ISOLATED BETWEEN VALVES. INSTALL FULL SIZE FLOW BALANCING TEES AT DISCHARGE OF ALL SAFETY RELIEF VALVES.

PIPING GENERAL NOTES

1. DESIGN, FABRICATE, INSTALL, INSPECT, AND TEST ALL NEW PIPING AND TUBING IN ACCORDANCE WITH ASME B31.3-2008. PIPING IS DESIGNATED AS NORMAL SERVICE PIPING, UNLESS SPECIFICALLY NOTED AS CATEGORY D SERVICE PIPING. SEE DESIGN-BUILD SPECIFICATIONS FOR DESIGN SCOPE.

2. QUALIFICATION OF CONTRACTOR: PERFORM ALL ASME B31.3 PIPING FABRICATION AND INSTALLATION OF PRESSURE COMPONENTS BY A FABRICATOR AUTHORIZED BY ASME TO APPLY THE "PP" OR "U" STAMP. PERFORM ALL ASME PRESSURE VESSEL FABRICATION AND INSTALLATION BY A FABRICATOR AUTHORIZED BY ASME TO APPLY THE "U" STAMP. PERFORM ALL WORK IN STRICT ACCORDANCE WITH THE ASME QUALITY ASSURANCE MANUAL OF THE PERFORMING FABRICATOR. SUBMIT QUALIFICATIONS AND QUALITY ASSURANCE MANUAL FOR APPROVAL.

3. QUALIFICATION OF WELDING PROCEDURE: CONFORM TO REQUIREMENTS OF ASME B31.3 PROCESS PIPING AND BOILER & PRESSURE VESSEL CODE (BPVC) SECTION VIII, DIV.1 AND IX. PERFORM WELDING USING LOW HYDROGEN ELECTRODES. WHERE THERE IS NO ACCESS TO THE BACK SIDE OF THE WELD, PERFORM ROOT PASS USING TIG PROCESS WITH INERT GAS PURGE. ALL BUTT WELDS SHALL BE FULL PENETRATION WELDS, UON. PERFORM PRE-HEATING AS RECOMMENDED BY ASME B31.3.

4. QUALIFICATION OF WELDERS: PERFORM ALL WELDING BY WELDERS CERTIFIED PER SECTION IX OF ASME CODE AND IN STRICT ACCORDANCE WITH A QUALIFIED WELDING PROCEDURE SPECIFICATION (WPS) AND PROCEDURE QUALIFICATION RECORD (PQR) FOR THE APPLICABLE MATERIAL, THICKNESS AND POSITION.

5. NON-DESTRUCTIVE EXAMINATION REQUIREMENT: TEST ROOT AND COVER PASSES OF PRESSURE PIPING WELDMENTS. TEST WELDS ON CARBON STEEL BY MAGNETIC PARTICLE. TEST WELDS ON STAINLESS STEEL BY LIQUID PENETRANT. INSPECT WELDS BY QUALIFIED (LEVEL II) INSPECTORS PER ASME B31.3. RADIOGRAPHICALLY EXAMINE 5% OF ALL FULL PENETRATION WELDED PIPING JOINTS, INCLUDING AT LEAST 5% OF SHOP WELDS AND 5% OF FIELD WELDS AND AT LEAST ONE WELD FROM EACH WELDER PER ASME B31.3. THE OWNER (NASA PRESSURE SAFETY) SHALL SPECIFY THE FIELD WELDS TO BE RT EXAMINED. NEW TO EXISTING WELD ON THE SVS PIPING SHALL BE RT EXAMINED AS AN ADDITIONAL WELD BEYOND THE 5% REQUIREMENT. SUBMIT EXAMINATION RESULTS TO COTR FOR FINAL ACCEPTANCE.

6. PIPING MODIFICATIONS: DESIGN MODIFICATIONS TO (E) PIPING NECESSARY TO CONNECT NEW EQUIPMENT, AND SUBMIT TO COTR FOR APPROVAL.

7. PIPING: PIPE AND FITTING SIZES SHOWN ARE NOMINAL PIPE SIZES, UON. ALL PIPING COMPONENTS SHALL BE SUITABLE FOR THE PRESSURE, TEMPERATURE AND SERVICE. REFER TO PIPING GENERAL NOTES FOR ADDITIONAL REQUIREMENTS. PROVIDE PIPING SYSTEMS AS FOLLOWS:
   - SVS GAS EFFLUENT (CATEGORY D SERVICE) TO GAS COOLING COLUMN: BLACK CARBON STEEL, 3/8" WALL, ASTM A106, GRADE B, SEAMLESS, ASME B36.10M. FITTINGS: ASTM A234, GRADE WPB, ASME B16.9 (WELDED). FLANGES: ASTM A105, ASME B16.5, CLASS 150 RF, SCH 40 BORE, WELDING NECK STYLE.
   - MAKEUP WATER (CATEGORY D SERVICE): GALVANIZED CARBON STEEL, SCHEDULE 40, SEAMLESS ASTM A53, TYPE S, GRADE B. FITTINGS: GALVANIZED MALLEABLE IRON, CLASS 150, THREADED, ASTM A197M, ASTM B16.3. UNIONS: CLASS 150, GROUND JOINT WITH BRASS-TO-IRON SEAT.
   - COOLING TOWER (CATEGORY D SERVICE): BLACK CARBON STEEL, SCHEDULE 40, ASTM A106, GRADE B, SEAMLESS, GROOVED ENDS. FITTINGS: BLACK UNGALVANIZED MALLEABLE IRON CASTINGS WITH GROOVED ENDS. GROOVED COUPLINGS: DUCTILE IRON CASTINGS BY SAME MFR AS FITTINGS, ASTM 536, GRADE (65-45-12), RIGID TYPE UON, WITH MOLDED GRADE E EPDM GASKET PER ASTM D2000.
   - COOLING TOWER DRAIN, OVERFLOW, BLOWDOWN (NON-ASME): DWV COPPER, ASTM B306. FITTINGS: DWV, WROUGHT COPPER, ASME B16.29. JOINTS: SOLDERED, ASTM B32. FLUX: LIQUID, NON-CORROSIVE, ASTM B813. MINIMUM SLOPE: 1/4"/FOOT.
   - INDUSTRIAL WASTE UNDERGROUND (CATEGORY D SERVICE): PVC DWV PIPE AND FITTINGS: SCHEDULE 40 WITH 25% RECYCLED CONTENT, ASTM D2665, ASTM F891, ASTM F1760. JOINTS: SOLVENT CEMENT PER ASTM D2564 AND ASTM D2855. MINIMUM SLOPE: 1/8"/FOOT.
   - WASTE TANK DRAIN (CATEGORY D SERVICE): PIPE: CPVC SCHEDULE 80, ASTM D2846, ASTM F441. FITTINGS: CPVC SCHEDULE 80 ASTM F439. JOINTS: SOLVENT CEMENT ASTM D2672 AND ASTM D2855. MINIMUM SLOPE: 1/4"/FOOT.
   - CHEMICAL PROCESS (NORMAL SERVICE): FRP, ASTM D2996, OR APPROVED ALTERNATE.

8. MISCELLANEOUS PIPING MATERIALS:
   - FLANGE ASSEMBLIES: ASME B16.5
   - BLIND FLANGES: ASTM A105, ASME B16.5, CLASS 150 RF, COMPATIBLE WITH MATING FLANGE
   - UNIONS: ASME B16.39, MATCH ADJACENT PIPING.
   - NIPPLES: ASTM A733, MATCH ADJACENT PIPING.
   - GASKETS: ASME B16.5, COMPRESS NON-ASBESTOS, ASTM F104, TYPE 7-P1161A FOR RAISED FACE FLANGES
   - BOLTING: BOLT: ASTM A193, GRADE B7, HEX NUTS: ASTM A194, GRADE 2H
   - THREADS: ASME B1.20.1
   - WELDING: FULL PENETRATION BUTT WELDED, UON.
   - PADDLE BLINDS: ASME B16.48, CLASS 150
   - VENT AND DRAIN VALVES: ASME B16.34 CERTIFIED.
   - OTHER: ALL COMPONENTS AND FITTINGS SHALL COMPLY WITH A LISTED SPECIFICATION IN ASME B31.3, TABLE 326.1, UON. ALTERNATELY, WITH NASA APPROVAL, UNLISTED COMPONENTS MAY BE QUALIFIED IN ACCORDANCE WITH B31.3 PARA. 304.7.2, WHICH SHALL INCLUDE AS A MINIMUM PROVIDING DOCUMENTATION OF ACCEPTABLE VENDOR CATALOG PRESSURE AND TEMPERATURE RATINGS.

9. PIPE INSULATION: NONE.

10. PRESSURE GAUGES: 4-1/2" DIAL, UON. CONFORM TO ASME B40.100. INSTALL GAUGE WITH PULSATION DAMPENER FOR WATER PIPE. INSTALL GAUGE WITH SIPHON FOR STEEL PIPE.

11. VALVES: CONFORM TO ASME B31.3.

    BALL VALVE: CARBON STEEL, FULL PORT, 285 PSI NON-SHOCK COLD WORKING PRESSURE, BLOWOUT-PROOF STEM, 316 STAINLESS STEEL STEM AND BALL, WITH ADJUSTABLE PACKING GLAND, FLANGED ENDS, SHALL CONFORM TO ASME B16.34, MSS SP-72. NIBCO #F-515-CS-F-66-FS OR APPROVED EQUAL.

    BUTTERFLY VALVE: DUCTILE IRON BODY, 200 PSIG NON-SHOCK COLD WORKING PRESSURE, ALUMINUM BRONZE DISC, EPDM LINER & SEAL, STAINLESS STEEL STEM WITH EXTENDED NECK, LUG STYLE FOR END OF LINE SERVICE (NO DOWNSTREAM FLANGE REQUIRED) ANSI CLASS 150 FLANGE CONNECTION, MANUAL LEVER OPERATOR 10-POSITION PLATE, SHALL CONFORM TO MSS SP-25, API 609. NOT FOR USE ON STEAM SERVICE. NIBCO #LD-2000 OR APPROVED EQUAL.

    GATE VALVE: BRONZE BODY, THREADED ENDS, CLASS 125, 125 PSIG SATURATED STEAM PRESSURE, 200 PSIG NON-SHOCK COLD WORKING PRESSURE, UNION BONNET, SOLID WEDGE. SHALL CONFORM TO MSS SP-80. NIBCO #T-124 OR APPROVED EQUAL.

    CONTROL VALVE: 2-WAY, FLANGED ANSI CLASS 125 CAST IRON BODY, MINIMUM 200 PSIG NON-SHOCK COLD WORKING PRESSURE. BRONZE TRIM, STAINLESS STEEL STEM, METAL TO METAL SEAT WITH ANSI LEAKAGE CLASS IV (0.1% OF Cv), 100:1 RANGEABILITY, ELECTRIC ACTUATOR, SHALL CONFORM TO MSS SP-85.

13. INSTALLATION: PROVIDE QUALIFIED WELDERS FOR WELDED PIPE. INSTALL 1/2" GLOBE VENT VALVE TO BLEED AIR AT ALL LOCAL HIGH POINTS, AND DRAIN WITH 1/2" SHUT-OFF VALVE AT ALL LOCAL LOW POINTS OF WATER PIPES. ALL VALVES AND PIPING SPECIALTIES SHALL BE FULL-LINE SIZE, UNLESS OTHERWISE NOTED. ALL REDUCTIONS IN PIPE SIZES SHALL BE MADE WITH ECCENTRIC REDUCERS UNLESS OTHERWISE NOTED. INSTALL WITH TOP SIDE FLAT IN WATER PIPING, AND BOTTOM SIDE FLAT IN GASEOUS PIPING. ELECTRICALLY INSULATE DISSIMILAR PIPE MATERIALS BY DIELECTRIC COUPLINGS, UNIONS OR FLANGE GASKETS. INSTALL HORIZONTAL PIPES WITH MINIMUM 7'-0" HEADROOM CLEARANCE, UNLESS OTHERWISE NOTED. PROVIDE CHAIN OPERATOR FOR VALVES INSTALLED OVER 6'-0" ABOVE FINISHED GRADE. DO NOT INSTALL WATER PIPING ABOVE ELECTRICAL EQUIPMENT. TORQUE OR TIGHTEN FLANGES TO CONFORM ASME PCC-1-2010. TORQUE OR TIGHTEN ALL NEW VALVES, FLANGES, HOSES, AND SWAGED-TYPE FITTINGS PER MANUFACTURER INSTALLATION INSTRUCTIONS AND RECOMMENDATIONS. BOLTS AND STUDS MUST HAVE MINIMUM TWO FULL THREADS BEYOND NUT AFTER ASSEMBLY. MATING BLIND FLANGES SHALL BE SAME MATERIAL AS FLANGES. FLUSH PIPING.

14. PAINTING: STAINLESS STEEL COMPONENTS SHALL NOT BE PAINTED. SHOP-CLEAN NEW CARBON STEEL PIPE TO SSPC-SP6. PRIME WITH AMERON DIMETCOTE 9H ZINC PRIMER, AND APPLY AMERON AMERCOAT 240 EPOXY TOP COATING WITH MINIMUM DRY FILM THICKNESS OF 0.0029"-0.0042" IN GRAY COLOR. CONFORM TO REGIONAL AIR DISTRICT (BAAQMD) RULE 8 FOR VOC CONTENTS OF ALL PAINTING PRODUCTS.

15. PIPING PRE-CLEANING: PURGE ALL NEW PIPING WITH SHOP AIR AFTER FABRICATION AND BEFORE THE FINAL CLOSE-OUT WELD OR FINAL BOLT-UP IS MADE. PURGE AT A MINIMUM AIR VELOCITY OF 15 FEET PER SECOND UNTIL NO FOREIGN MATTER, WATER, OR OIL IS VISIBLE AT PIPE EXIT. CAP CLEANED PIPING AT BOTH ENDS FOR SHIPMENT TO AVOID ENTRY OF FOREIGN MATTER INSIDE PIPE.

16. PIPING SYSTEM DESIGN PRESSURE AND TEST PRESSURE:
    - SVS GAS EFFLUENT (CATEGORY D SERVICE):
      - DESIGN PRESSURE = 1.0 PSIG
      - INITIAL SERVICE LEAK TEST AT SYSTEM PRESSURE ONLY.
    - MAKEUP WATER (CATEGORY D SERVICE):
      - DESIGN PRESSURE = 60 PSIG
      - HYDROSTATIC PRESSURE TEST NEW PIPING TO 90 PSIG
      - INITIAL SERVICE LEAK TEST ENTIRE SYSTEM AT SYSTEM PRESSURE.
    - COOLING TOWER WATER (CATEGORY D SERVICE):
      - DESIGN PRESSURE = 40 PSIG
      - HYDROSTATIC PRESSURE TEST TO 60 PSIG.
      - INITIAL SERVICE LEAK TEST ENTIRE SYSTEM AT SYSTEM PRESSURE.
    - COOLING TOWER DRAIN, OVERFLOW, BLOWDOWN (NON-ASME):
      - ATMOSPHERIC GRAVITY DRAIN
      - PRESSURE TEST TO 10'WG TEST PRESSURE.
    - INDUSTRIAL WASTE UNDERGROUND (CATEGORY D SERVICE):
      - ATMOSPHERIC GRAVITY DRAIN
      - PRESSURE TEST TO 10'WG TEST PRESSURE.
    - WASTE TANK DRAIN (CATEGORY D SERVICE):
      - DESIGN PRESSURE = 10 PSIG (DRAIN FROM TANK VENTED TO COOLING COLUMN)
      - INITIAL SERVICE LEAK TEST AT SYSTEM PRESSURE ONLY.
    - CHEMICAL PROCESS (NORMAL SERVICE):
      - DESIGN PRESSURE = PER DESIGN-BUILD
      - HYDROSTATIC PRESSURE TEST TO 150% OF DESIGN PRESSURE
      - INITIAL SERVICE LEAK TEST ENTIRE SYSTEM AT SYSTEM PRESSURE.

17. HYDROSTATIC PRESSURE TEST PREPARATION:
    A) CHECK PIPE SYSTEM FOR COMPLIANCE WITH CONTRACT DOCUMENTS.
    B) VERIFY PIPES ARE FREE OF FOREIGN MATERIALS AFTER FABRICATION AND ASSEMBLY.
    C) INSTALL HIGH POINT VENTS AND LOW POINT DRAINS IN PIPES. PROVIDE 1/2" BLEED VENT VALVES TO RELEASE TRAPPED AIR, AND 1/2" DRAIN VALVES TO PURGE PIPES.
    D) ZERO LEAKAGE IS REQUIRED. ESTABLISH POSITIVE BOUDARY FOR TEST PRESSURE WITHOUT USING VALVES. INSTALL TEMPORARY CLOSURES AT TEST BOUNDARIES (PADDLE BLINDS, BLIND FLANGES, OR PIPE CAPS). REMOVE TEMPORARY CLOSURES AFTER TEST IS SUCCESSFULLY COMPLETED.

18. HYDROSTATIC PRESSURE TEST PROCEDURE:
    A) PERFORM ALL TESTING IN ACCORDANCE WITH ASME B31.3 PROCESS PIPING CODE AND ASME SECTION VIII WITH ALL JOINTS EXPOSED, BEFORE ANY PIPE WRAP OR INSULATION IS APPLIED.
    B) PIPE METAL AND TEST FLUID TEMPERATURE AT 50°F, OR GREATER, AT TIME OF PRESSURE TESTING. HEAT PIPE BETWEEN 50° AND 100°F, IF AMBIENT CONDITIONS ARE BELOW 50°F.
    C) OPEN ALL VALVES WITHIN HYDROSTATIC TEST BOUNDARIES, DURING TEST.
    D) TEST ALL NEW OR MODIFIED EXISTING PRESSURE PIPING FOR 10 MINUTES AT TEST PRESSURE WITH NO LEAKAGE. REPAIR LEAKS, AND REPEAT TEST.
    E) TEST FIELD CLOSURE WELDS USING "EXPANSION SEAL TECHNOLOGIES" FLANGE WELD TEST PLUG, OR APPROVED EQUAL.
    F) TEST SHALL BE WITNESSED BY AMES PRESSURE SYSTEM SAFETY ENGINEER OR TECHNICAL REPRESENTATIVE. ARC FORM 342 OR EQUIVALENT SHALL BE COMPLETED.

19. ALTERNATE PRESSURE TEST PROCEDURE: WHERE APPROVED BY NASA PRESSURE SYSTEMS MANAGER, ALTERNATE TEST PROCEDURE MAY BE USED IN LIEU OF HYDROSTATIC PRESSURE TEST. PRE-TEST EXAMINATION: 100% RT ON NEW PIPING, AND 100% MT ON EXISTING PIPING. PNEUMATICALLY TEST PIPE AT OPERATING PRESSURE.

20. TEST RECORDS: PREPARE AND SUBMIT TEST REPORTS TO COTR FOR ALL PIPING SYSTEMS AND VESSELS REQUIRING HYDROSTATIC AND NONDESTRUCTIVE EXAMINATION TEST. SUBMIT TEST REPORTS AND RADIOGRAPHIC FILMS TO THE COTR FOR FINAL ACCEPTANCE WITHIN 3 DAYS OF TEST COMPLETION. TEST REPORTS AND RADIOGRAPHIC FILMS SHALL BECOME PROPERTY OF THE GOVERNMENT.

21. PIPE SUPPORT AND BRACING: COMPLY WITH ASME B31.3. DESIGN-BUILD SUPPORTS: COMPLY WITH MSS SP-58. SUPPORT TYPES LISTED ARE REFERENCED TO MSS SP-58, UON. SUPPORTS INCLUDE ANCHORS, ADHESIVE, EPOXY, HANGERS, CLAMPS, GROUTING, SHIMS, ETC. PROVIDE ROD STIFFENERS ON HANGERS OVER 19 INCH IN LENGTH. MAINTAIN 1" MINIMUM CLEARANCE BETWEEN PIPES AND ADJACENT FINISHES AND DEVICES.

REGISTERED PROFESSIONAL ENGINEER MICHAEL S. CALLAHAN M 27183 MECHANICAL STATE OF CALIFORNIA

Approved for Construction
Moffett Field Permit Board
Chief Building Official
Permit No. 11P002

ZONE	LETTER	REVISIONS	DRAWN	DATE	APPRVD

ROLE	DATE
DRAWN J.HO	3/13/2012
DESIGNED M.CALLAHAN	3/13/12
CHECKED J.XIANG	3/15/12
PROJMGR P.WAN	3/15/12
REQUESTER R.OLIVARES	3/15/2012
R&QA	
SAFETY D.FRASER	3/15/12
SUPERVISOR S.FRANKEL	3/15/12

Ames Research Center
Moffett Field, California

STEAM VACUUM SYSTEM NOx EMISSION REDUCTION SYSTEM
GENERAL

MECHANICAL NOTES

SIZE D | CAGE CODE 25307 | A334A-1000-M1 | REV
SCALE NONE | INDEX | SHEET | OF

DWG NO. A334A-1000-M1 | SH. | REV

FILE NAME: A334A-1000-M1_1 03-12-2012

60220641

DWG: R:\234A\60220641.0001 (K11035) NOx Scrubber Engrg Support\500_CAD.Rev3\M\Sheet\A334A---1000-M01_1.dwg Version: 18.1s (LMS Tech) User: jjho
DATE: Mar 15, 2012 - 9:51:29 am

COOLING TOWER

UNIT TAG	GPM	EWB °F	EWT °F	LWT °F	LIFT 'WG	PUMP HEAD 'WG	CELLS	CELL DIMENSIONS LxWxH (MAX)	STACK HEIGHT	SOUND LEVEL dBA	FAN ESP	FAN QTY	FAN DIA.	FAN CFM	FAN RPM	MOTOR DATA HP (MAX)	MOTOR DATA NO.	MOTOR DATA VOLTS/PHASE	MOTOR DATA VFD	OPER WT LBS (MAX)	MFR & MODEL NO. ◇4	REMARKS
CT-1	–	–	–	–	–	–	ONE	24' x 14' x 20'	–	71 ◇6	0.0"	1	–	–	–	50	1	460V / 3ø	YES	45,000	–	◇5 ◇7 ◇8 ◇12 ◇13

HEAT EXCHANGER

UNIT TAG	SERVICE	RATED TEMP °F	MAWP PSIG	PRIMARY FLUID	GPM	WPD	EWT °F	LWT °F	PIPE CONN	SECONDARY FLUID	GPM	WPD	EWT °F	LWT °F	PIPE CONN	OPER WT LBS (MAX)	MFR & MODEL NO. ◇3	UNIT DIMENSIONS LxWxH (MAX)	REMARKS
HX-1	GAS COOLING COLUMN	150	75	GAS COOLING WATER	–	–	–	–	–	TOWER WATER	–	–	–	–	–	8,200	–	106" x 29" x 83"	PLATE/FRAME TYPE ◇12 ◇13

PUMPS

UNIT TAG	SERVICE	GPM	TDH	EWT	RATED TEMP °F	RATED PSIG	MAX NPSH REQ'D	INLETxOUTLET CONNECTION SIZE	MOTOR DATA RPM	MOTOR DATA BHP (MAX)	MOTOR DATA HP (MAX)	MOTOR DATA VOLTS/PHASE	MOTOR DATA VFD	OPER WT LBS	MFR & MODEL NO. ◇1	TYPE	DETAILS	REMARKS
CTP-1	COOLING TOWER CT-1	–	–	77°	275°	150	–	–	1770	30.1	40	460V / 3ø	YES	–	–	–	–	◇2 ◇12 ◇13
CP-1	GAS COOLING COLUMN	–	–	145°	275°	150	–	–	1770	–	50	460V / 3ø	YES	–	–	–	–	◇2 ◇12
CP-2	REDUCTION COLUMN	–	–	89°	275°	150	–	–	–	–	15	460V / 3ø	NO	–	–	–	–	◇2 ◇12
CP-3	REDUCTION COLUMN	–	–	89°	275°	150	–	–	–	–	15	460V / 3ø	NO	–	–	–	–	◇2 ◇12
CP-4	CAUSTIC COLUMN	–	–	89°	275°	150	–	–	–	–	15	460V / 3ø	NO	–	–	–	–	◇2 ◇12

FAN

UNIT TAG	SERVICE	CFM	FSP	TYPE	MAX SONES	WHEEL TYPE ①	DRIVE	OUTLET FPM	FAN RPM	MOTOR DATA BHP (MAX)	MOTOR DATA MHP (MAX)	MOTOR DATA RPM	MOTOR DATA VOLTS/PHASE	OPER WT LBS	MFR & MODEL NO.	REMARKS
DF-1	SVS DRAFT FAN	–	–	UTILITY	–	RB	–	–	–	20.9	30	–	460 / 3ø	–	–	◇9 ◇12 ◇13

① FC=FORWARD CURVED BI=BACKWARD INCLINED CENTRIFUGAL AX=AXIAL RB=RADIAL BLADE

WASTE PRE-TREATMENT TANK

UNIT TAG	SERVICE	VOLUME GAL (MAX)	DIMENSIONS DIAM x HEIGHT (MAX)	TYPE	DISCHARGE PUMP	TANK WT LBS	OPER WT LBS	MFR & MODEL NO.	REMARKS
WT-1	NOX EFFLUENT	8,360	8'øx24'	HORIZONTAL, ABOVE GROUND	NONE	–	–	XERES, OR APPROVED EQUAL	◇10 ◇11 ◇12

NOZZLE LOAD SCHEDULE

	NOZZLE	SIZE	Fx (AXIAL) LBS	Fy (VERTICAL) LBS	Fz (LATERAL) LBS	Mx FT-LBS	My FT-LBS	Mz FT-LBS	REMARKS
GAS COOLING COLUMN	INLET	18"	±2,050	±1,250	±1,450	±1,000	±300	±250	

SHEET NOTES

1. EQUIPMENT DIMENSIONS ARE APPROXIMATE.
2. SEE SHEET G2 FOR SYMBOLS AND ABBREVIATIONS.
3. SEE SHEET M1 FOR MECHANICAL NOTES.
4. DATA AND SELECTIONS LISTED FOR DESIGN-BUILD PROCESS EQUIPMENT IS APPROXIMATE ONLY. DESIGN-BUILD CONTRACTOR IS RESPONSIBLE FOR FINAL DESIGN (FLOW RATE, HEAD, STATIC PRESSURE, ETC.) AND SELECTION. SEE SHEET G2 FOR DESIGN-BUILD SPECIFICATIONS.

KEY NOTES

◇1 ACCEPTABLE PUMP MANUFACTURERS: PEERLESS, GOULD, AMERICAN MARSH, PACO, BELL & GOSSETT, TACO, PEERLESS, OR APPROVED EQUAL.

◇2 PUMP AND MOTOR RATED FOR OUTDOOR INSTALLATION. PUMP (MOTOR) RPM IS FLEXIBLE TO MEET SCHEDULE PERFORMANCE. PUMP INLET AND OUTLET SIZE IS FLEXIBLE TO MEET SCHEDULE PERFORMANCE. SELECT PUMP NOT TO EXCEED SCHEDULE BHP AND SCHEDULE NPSH REQUIRED. PUMP NO-FLOW ("DEAD HEAD") PRESSURE: 90'WG MAX.

◇3 ACCEPTABLE PLATE/FRAME HEAT EXCHANGER MANUFACTURERS: MUELLER, TRANTER, ALPHA-LAVAL, ITT STANDARD, TACO, OR APPROVED EQUAL.

◇4 ACCEPTABLE COOLING TOWER MANUFACTURERS: BALTIMORE AIRCOIL, SPX, EVAPCO, COOLING TOWER DEPOT, OR APPROVED EQUAL.

◇5 COOLING TOWER FEATURES: INVERTER DUTY PREMIUM EFFICIENCY MOTOR PER NEMA MG-1, VIBRATION CUTOUT SWITCH, INTEGRAL WATER BASIN, VELOCITY RECOVERY STACK, EXTENDED LUBRICATION LINES, AIR INLET SCREENS, GALVANIZED STEEL CONSTRUCTION, HIGH TEMPERATURE WET DECK FOR EWT UP TO 135°F, FACTORY MUTUAL APPROVAL, HYBRID POLYMER CORROSION PROTECTION COATING FOR GALVANIZED COMPONENTS WITH FUSE-BONDING THERMOSETTING CURE PROCESS, SIDE OUTLET, GROOVED PIPE CONNECTIONS. TOWER FRAMING MUST RESIST COOLING TOWER INLET AND OUTLET NOZZLE LOADS.

◇6 MAXIMUM OVERALL SOUND PRESSURE LEVEL AT 50 FEET FROM INTAKE LOUVER.

◇7 MAINTENANCE SAFETY: PROVIDE PERMANENT ACCESS FOR MAINTENANCE OF ALL EQUIPMENT TO MEET OSHA SAFETY REQUIREMENTS. PROVIDE PERMANENT LADDER, SAFETY GAGE, SAFETY GATE, AND HANDRAILS FOR ACCESS TO FAN DECK. PROVIDE PERMANENT INTERNAL WALKWAY FOR ACCESS TO STRAINER, OUTLET AND MAKE-UP WATER ASSEMBLY. WALKWAYS SHALL BE FIRE RETARDANT, AND SLIP-RESISTANT.

◇8 WATER QUALITY DATA AT NASA AMES RESEARCH CENTER. VERIFY IN FIELD.

DETECTED CONTAMINANTS	UNIT	AVERAGE
TOTAL DISSOLVED SOLIDS	PPM	36
CALCIUM	PPM	4.7
HARDNESS (AS $CaCO_3$)	PPM	15
pH	UNIT	9.0
CHLORIDE	PPM	3.25
SULFATE	PPM	2.9

◇9 EXHAUST FAN: FRP CONSTRUCTION, CLASS 3 WHEEL, RADIAL BLADE, INVERTER DUTY READY MOTOR.

◇10 WASTE TANK: TANK FOR OUTDOOR INSTALLATION ABOVE GROUND. PROVIDE PIPE CONNECTIONS AS REQUIRED FOR PUMP OUT AND PROCESSES, AND AS SHOWN ON PIPING DIAGRAM.

◇11 TANK MAINTENANCE SAFETY: PROVIDE PERMANENT ACCESS FOR MAINTENANCE OF ALL EQUIPMENT AND TANK INTERIOR. PROVIDE MANWAY AND INTERNAL LADDER FOR ACCESS TO TANK INTERIOR. PROVIDE PERMANENT LADDER, SAFETY CAGE, SAFETY GATE, AND HANDRAILS FOR ACCESS TO MANWAY.

◇12 DESIGN-BUILD EQUIPMENT.

◇13 COOLING TOWER AND HEAT EXCHANGER IF REQUIRED BY THE NOx EMISSION REDUCTION SYSTEM SHALL BE DESIGN BUILD BY CONTRACTOR AND SUBMITTED TO NASA FOR APPROVAL.

Approved for Construction
Moffett Field Permit Board
Chief Building Official
Permit No. 11P002

ZONE	LETTER	DESCRIPTION	DRAWN	DATE	APPRVD

REVISIONS

DRAWN J.HO	DATE 3/13/2012	
DESIGNED M.CALLAHAN	DATE 3/13/12	
CHECKED J.XIANG	DATE 3/13/12	
PROJMGR P.WAN	DATE 3/13/12	
REQUESTER R.OLIVARES	DATE 3/13/12	
R&QA	DATE	
SAFETY D.FRASER	DATE 3/15/2012	
SUPERVISOR S.FRANKEL	DATE 3/13/12	
	DATE	

REGISTERED PROFESSIONAL ENGINEER — MICHAEL S. CALLAHAN — No. M27887 — MECHANICAL — STATE OF CALIFORNIA

Ames Research Center
Moffett Field, California

STEAM VACUUM SYSTEM NOx EMISSION REDUCTION SYSTEM
MECHANICAL

EQUIPMENT SCHEDULES

SIZE	CAGE CODE	DWG NO.	REV
D	25307	A334A-1000-M2	A
SCALE NONE		INDEX	SHEET OF

FILE NAME: A334A-1000-M2_1 03-12-2012

60220641

DWG: R:\234A\60220641.0001 (K11035) NOx Scrubber Engrg Support\500_CAD.Rev3\W\Sheet\A334A---1000-M02_1.dwg Version: 17.1s (LMS Tech) User: rschaeff
DATE: Mar 12, 2012 - 1:47:23 pm

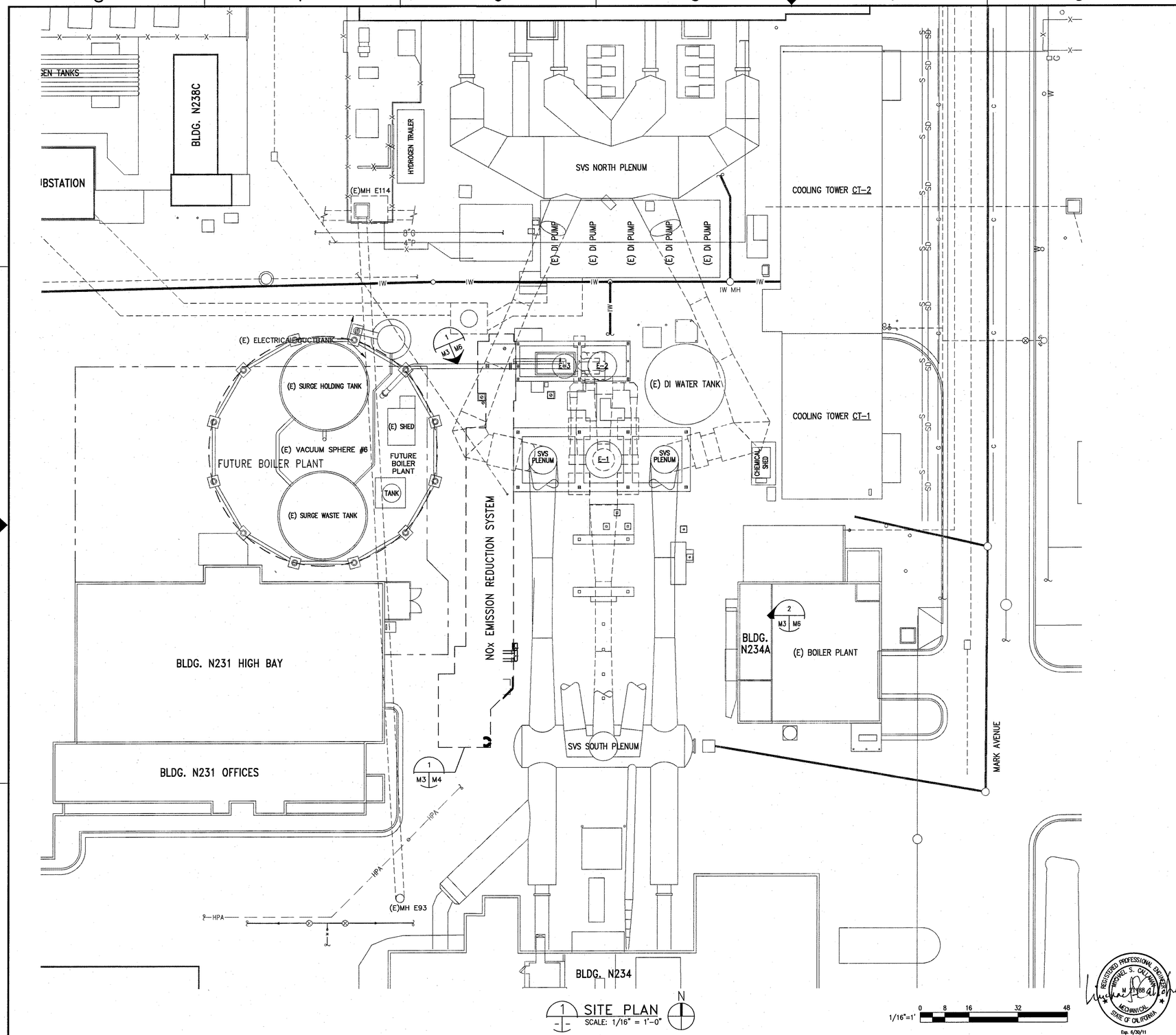

1 SITE PLAN
SCALE: 1/16" = 1'-0"

1/16"=1' 0 8 16 32 48

REGISTERED PROFESSIONAL ENGINEER MICHAEL S. CALLAHAN M 21188 MECHANICAL STATE OF CALIFORNIA
Exp. 6/30/11

DWG NO.	SH.	REV
A334A-1000-M3		

SHEET NOTES

1. SEE SHEET G2 FOR SYMBOLS AND ABBREVIATIONS.
2. SEE SHEET M1 FOR MECHANICAL NOTES.
3. SEE P&ID ON SHEET M7 FOR ADDITIONAL PIPING INFORMATION

KEY NOTES

Approved for Construction
Moffett Field Permit Board

Chief Building Official
Permit No. 11P002

ZONE	LETTER	DESCRIPTION	DRAWN	DATE	APPRVD

REVISIONS

		DATE
DRAWN	J.HO	3/13/2012
DESIGNED	M.CALLAHAN	3/13/12
CHECKED	J.XIANG	3/13/12
PROJMGR	P.WAN	3/13/12
REQUESTER	R.OLIVARES	3/13/12
R&QA		
SAFETY	D.FRASER	3/15/12
SUPERVISOR	S.FRANKEL	3/14/12

Ames Research Center
Moffett Field, California

STEAM VACUUM SYSTEM NOx EMISSION REDUCTION SYSTEM
MECHANICAL

SITE PLAN

SIZE	CAGE CODE		REV
D	25307	A 334A-1000-M3	
SCALE	NONE	INDEX	SHEET OF

FILE NAME: A334A-1000-M3 03-12-2012

60220641

DWG: R:\234A\60220641.0001 (K11035) NOx Scrubber Engrg Support\500_CAD.Rev3\M\Sheet\A334A---1000-M03.dwg Version: 17.1s (LMS Tech) User: rschaef1
DATE: Mar 12, 2012 - 1:49:41 pm

DWG NO.	SH.	REV
A334A-1000-M4		

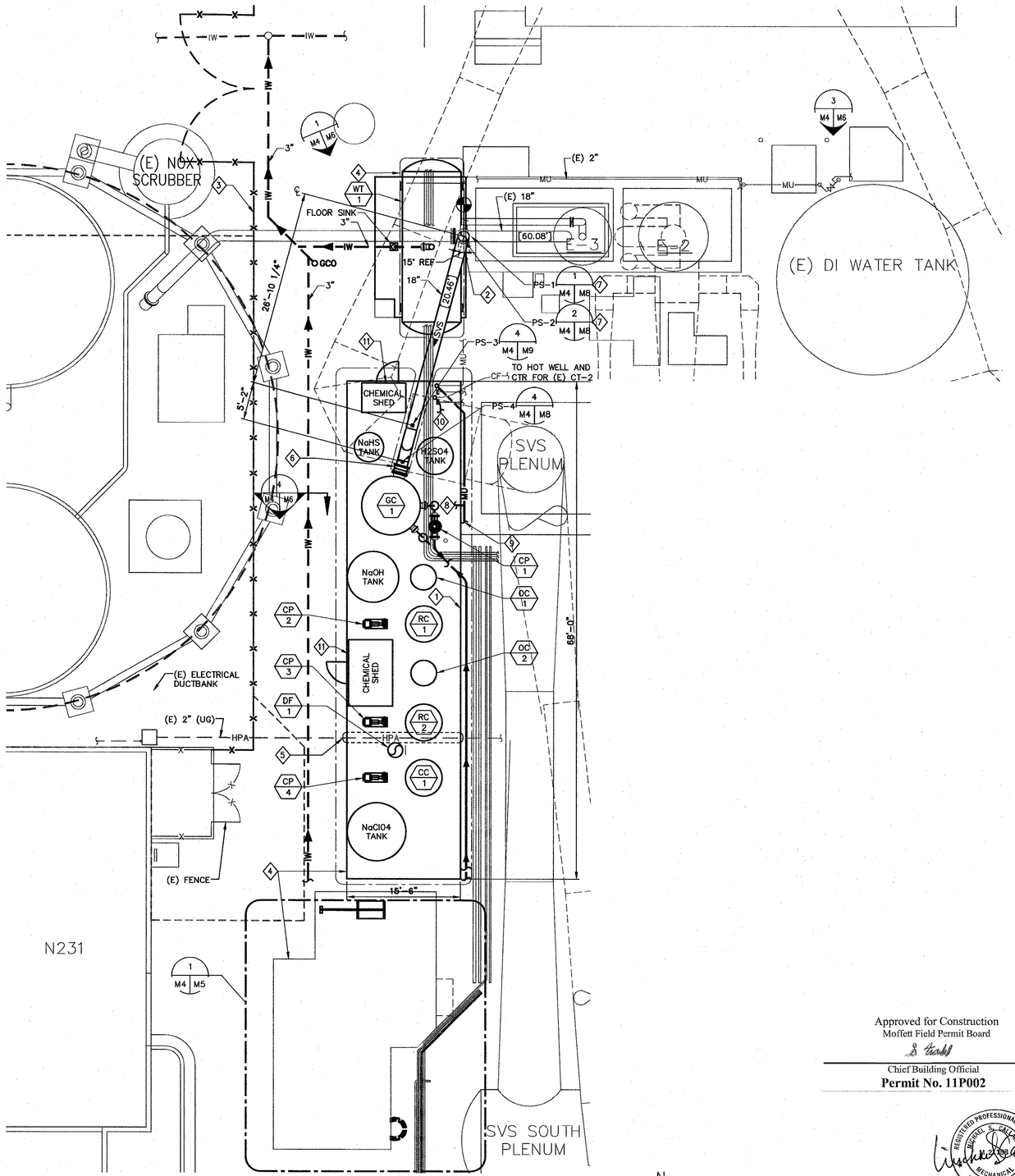

1 M3 M4 MECHANICAL ENLARGED PLAN
SCALE: 1/8" = 1'-0"

N

1/8"=1' 0 4 8 16 24

SHEET NOTES

1. SEE SHEET G2 FOR SYMBOLS AND ABBREVIATIONS.
2. SEE SHEET M1 FOR MECHANICAL NOTES.
3. SEE SHEET M2 FOR EQUIPMENT AND NOZZLE SCHEDULE.
4. SEE SHEET M7 FOR ADDITIONAL PIPING INFORMATION.
5. REFERENCE PIPE ELEVATIONS INDICATED BY [ ] ARE IN FEET FOR PIPE CENTERLINE RELATIVE TO TOP OF CONCRETE OF (E) SVS FOUNDATION.

KEY NOTES

1. PURGE PIPING FROM CHEMICAL PROCESS COLUMNS (DESIGN–BUILD). SEE PIPING DIAGRAM FOR ADDITIONAL INFORMATION. MULTIPLE PIPES ARE SHOWN STACKED VERTICALLY AND CLAMPED TO FORMED CHANNEL.
2. CUT, ROTATE AND WELD (E) 18" ELBOW AND RELATED PIPE SUPPORT AS REQUIRED TO CONNECT 18" SVS PIPING TO NOx EMISSION REDUCTION SYSTEM.
3. 6'–0" HIGH PERIMETER FENCE WITH LOCKED GATE TO SECURE AND PREVENT UNAUTHORIZED ACCESS BY OTHERS.
4. BOUNDARY FOR INSTALLATION OF DESIGN–BUILD NOX PROCESS EQUIPMENT AND PIPING. FOR SCOPE OF DESIGN–BUILD WORK, SEE DESIGN–BUILD SPECIFICATIONS ON SHEET M1. SEE ALSO KEY NOTE #1 ON SHEET M7 FOR SCOPE OF WORK.
5. (E) 2" UNDERGROUND HPA PIPING: IF BOTTOM OF FOUNDATION EXCEEDS 3 FEET BELOW GRADE, REROUTE HPA PIPE ABOVE NEW FOUNDATION. DESIGN OF REROUTE SHALL BE DESIGN–BUILD. COMPLY WITH ASME B31.3, WITH FULL RT OF ALL WELDS. HYDROSTATICALLY TEST ALL NEW WELDS. SUBMIT DYNAMIC SEISMIC ANALYSIS. REPLACE (E) HARDCAP DAMAGED BY CONSTRUCTION.
6. 18" DOUBLE ARCHED RUBBER EXPANSION JOINT, FULL FACE FLANGES WITH RETAINING RINGS, 100 PSIG RATED, ASME B31.3 COMPLIANT. FLEXICRAFT ULTRASPOOL DOUBLE MODEL USL21800.
7. SEE PHOTO REFERENCE 1/M6 FOR VIEW OF (E) PIPE SUPPORTS TO BE REPLACED (PS–1 AND PS–2). PIPE SUPPORT ELEVATION ARE: PS–1: [60.08'], PS–2: [55.42']
8. 2" MAKE–UP WATER TO NOX PROCESS.
9. 2" MAKE–UP WATER TO COOLING TOWER (DESIGN–BUILD) CT–1 IF REQUIRED. SUPPORT AT 10' MAX. SPACING. SEE DETAIL 5 ON SHEET M6 FOR TYPICAL PIPE SUPPORT.
10. RECONNECT (E) CHEMICAL FEED TUBING FROM NEW NaOH CHEMICAL FEED PUMP.
11. CHEMICAL STORAGE SHEDS (DESIGN–BUILD): 2–HOUR FIRE RATED, FM APPROVED, EPA & OSHA COMPLIANT, SINGLE DOOR, NON–EXPLOSION INTERIOR LIGHT, PASSIVE VENT, STEEL GRATE DECK OVER SECONDARY CONTAINMENT FLOOR, PORTABLE EYEWASH STATION. COMPLY WITH EPA AND OSHA REGULATIONS FOR THE MATERIALS TO BE HOUSED IN EACH SHED. MFR: US CHEMICAL STORAGE FIRELOC. LOCATE H_2SO_4 FEED PUMP IN NORTH SHED. LOCATE ALL OTHER FEED PUMPS IN SOUTH SHED.

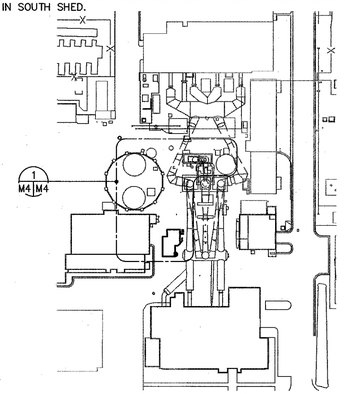

KEY PLAN

Approved for Construction
Moffett Field Permit Board

Chief Building Official
Permit No. 11P002

ZONE	LETTER	DESCRIPTION	DRAWN	DATE	APPRVD
REVISIONS					

		DATE
DRAWN	J.HO	3/14/2012
DESIGNED	M.CALLAHAN	3/13/12
CHECKED	J.XIANG	3/13/12
PROJMGR	P.WAN	3/13/12
REQUESTER	R.OLIVARES	3/14/12
R&QA		DATE
SAFETY	D.FRASER	3/15/12
SUPERVISOR	S.FRANKEL	3/15/12
		DATE

REGISTERED PROFESSIONAL ENGINEER MICHAEL S. CALLAHAN MECHANICAL STATE OF CALIFORNIA

Ames Research Center
Moffett Field, California

STEAM VACUUM SYSTEM NOx EMISSION REDUCTION SYSTEM
MECHANICAL

ENLARGED SITE PLAN

SIZE	CAGE CODE	REV
D	25307	A
SCALE	NONE	INDEX / SHEET OF

334A-1000-M4

FILE NAME: A334A-1000-M4_1 03-12-2012

60220641

DWG: R:\334A\60220641.0001 (K11035) NOx Scrubber Engrg Support\500_CAD.Rev3\M\Sheet\A334A----1000-M04_1.dwg Version: 18.1s (LMS Tech) User: jjho
DATE: Mar 14, 2012 - 11:15:28 am

DWG NO.	SH.	REV
A334A-1000-M5		

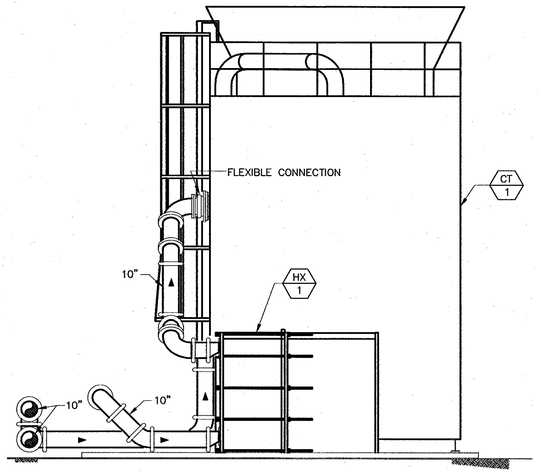

2 SECTION – COOLING TOWER (LOOKING SOUTH)
M5 M5 SCALE: 1/4" = 1'-0"

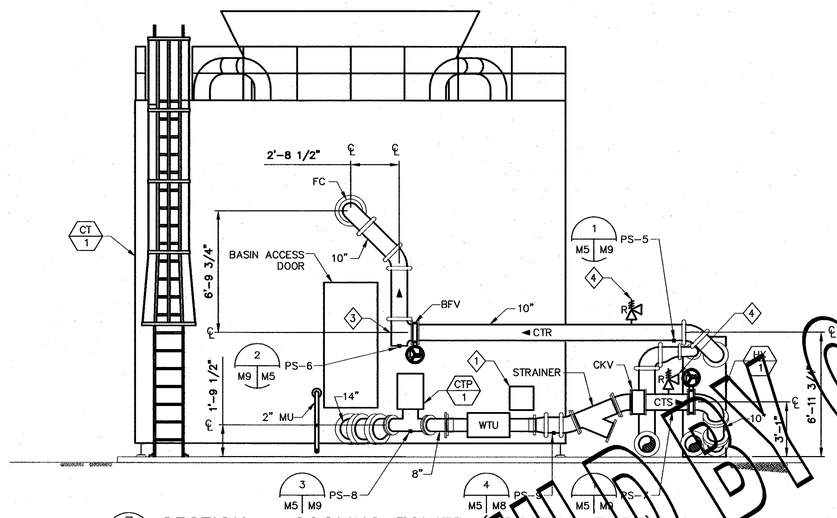

3 SECTION – COOLING TOWER (LOOKING EAST)
M5 M5 SCALE: 1/4" = 1'-0"

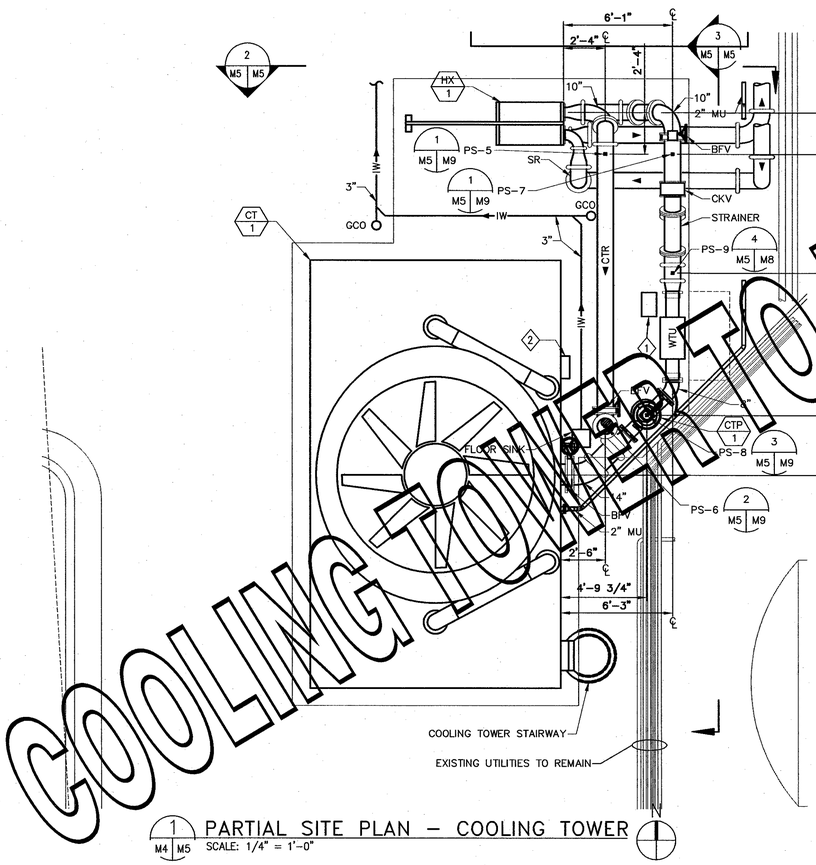

1 PARTIAL SITE PLAN – COOLING TOWER
M4 M5 SCALE: 1/4" = 1'-0"

1/4"=1' 0 2 4 8 12

SHEET NOTES

1. SEE SHEET G2 FOR SYMBOLS AND ABBREVIATIONS.
2. SEE SHEET M1 FOR MECHANICAL NOTES.
3. SEE SHEET M2 FOR EQUIPMENT AND NOZZLE SCHEDULE.
4. SEE P&ID ON SHEET M7 FOR ADDITIONAL PIPING INFORMATION.

KEY NOTES

1. MOUNT TRANSFORMER PANEL FOR WATER TREATMENT UNIT
2. MOUNT WATER TREATMENT CONTROLLER IN WEATHERPROOF ENCLOSSURE ON COOLING TOWER. GROOVED TEE FITTING: STEEL FITTING. WELD TO SUPPORT WATER TIGHT.
3. 3/4" X 1" DIRECT SPRING OPERATED PRESSURE SAFETY RELIEF VALVE SUITABLE FOR WATER SERVICE, 40 GPM MINIMUM CAPACITY AT 75 PSI SET PRESSURE AND 70°F, UV STAMPED IN ACCORDANCE WITH ASME BPVC SECTION VIII DIV. 1, ASME SA216 WCB CARBON STEEL BODY, BUNA-N SEAT, FNPT ENDS, ANDERSON GREENWOOD MODEL 81PS1F68-4 OR APPROVED EQUAL.

COOLING TOWER TO BE DESIGN BUILD BY CONTRACTOR

Approved for Construction
Moffett Field Permit Board

Chief Building Official
Permit No. 11P002

ZONE	LETTER	DESCRIPTION	DRAWN	DATE	APPRVD

REVISIONS

DRAWN J.HO		DATE 3/14/2012
DESIGNED M.CALLAHAN		DATE 3/13/12
CHECKED J.XIANG		DATE 3/15/12
PROJMGR P.WAN		DATE 3/14/12
REQUESTER R.OLIVARES		DATE 3/14/12
R&QA		DATE
SAFETY D.FRASER		DATE 3/15/12
SUPERVISOR S.FRANKEL		DATE 3/15/12

REGISTERED PROFESSIONAL ENGINEER MICHAEL S. CALLAHAN No. 21188 MECHANICAL STATE OF CALIFORNIA

Ames Research Center
Moffett Field, California

STEAM VACUUM SYSTEM NOx EMISSION REDUCTION SYSTEM
MECHANICAL

PARTIAL SITE PLAN – COOLING TOWER

SIZE	CAGE CODE		REV
D	25307	A 334A-1000-M5	
SCALE	NONE	INDEX	SHEET OF

FILE NAME: A334A-1000-M05_1 03-12-2012

60220641

DWG: R:\234A\60220641.0001 (K11035) NOx Scrubber Engrg Support\500_CAD.Rev3\M\Sheet\A334A---1000-M05_1.dwg Version: 18.1s (LMS Tech) User: jjho
DATE: Mar 14, 2012 - 11:16:08 am

DWG NO. A334A-1000-M6 | SH. | REV

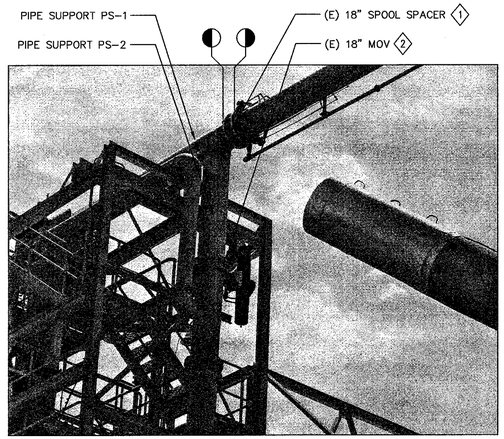

1 (E) 18" SVS PIPE
M3 | M6 SCALE: NONE

2 (E) GAS EMISSION CHART RECORDER
M3 | M6 SCALE: NONE

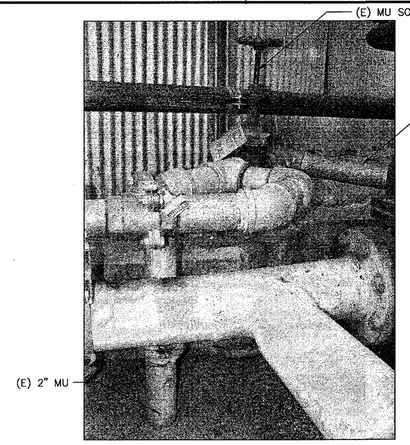

3 (E) MAKE-UP WATER SOV
M4 | M6 SCALE: NONE

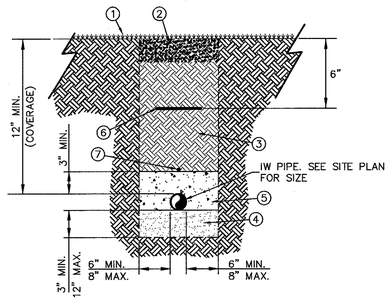

DETAIL NOTES:

1. 4" MIN. ASPHALT CONCRETE (A.C.) OR MATCH EXISTING, WHICHEVER IS GREATER.
2. 10" MIN. AGGREGATE BASE OR MATCH EXISTING, WHICHEVER IS GREATER.
3. CLASS II AGGREGATE BASE (A.B.), 95% COMPACTION.
4. SAND BEDDING MATERIAL: COMPACT TO 95% RELATIVE DENSITY.
5. SLURRY: TWO SACK CONCRETE SLURRY (GAS PIPING ONLY)
6. TRACER WARNING TAPE: 12" BELOW GRADE.
7. TRACER WIRE: 14 AWG AT 4" ABOVE TOP OF GAS PIPE.

4 TRENCH DETAIL
M4 | M6 SCALE: NONE

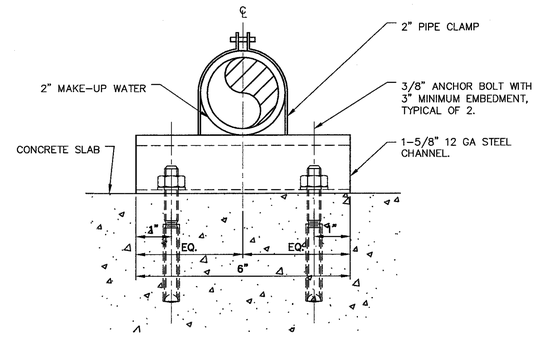

5 MAKE-UP WATER PIPE SUPPORT
M4 | M6 SCALE: NONE

SHEET NOTES

1. SEE SHEET G2 FOR SYMBOLS AND ABBREVIATIONS.
2. SEE SHEET M1 FOR MECHANICAL NOTES.

KEY NOTES

1. REPLACE AND SALVAGE (E) 18" SPOOL SPACER WITH 18" BLIND SPOOL DURING NEW NOX SCRUBBER OPERATIONAL TESTING. INSTALL (E) 18" SPOOL SPACER AT POINT OF DISCONNECTION AFTER OPERATION TESTING OF NEW NOX SCRUBBER IS COMPLETED.
2. (E) 18" MOV SHALL REMAIN OPEN DURING NEW NOX SCRUBBER SYSTEM OPERATION TESTING. (E) 18" MOV SHALL REMAIN CLOSED WHEN EXISTING NOX SCRUBBER SYSTEM IS IN OPERATION.
3. (E) GAS EMISSION CHART RECORDER SHALL REMAIN OPERATIONAL DURING INSTALLATION OF NEW NOX SCRUBBER SYSTEM. REMOVE, SALVAGE AND RETURN (E) GAS EMISSION CHART RECORDER TO GOVERNMENT AFTER INSTALLATION OF NEW NOX SCRUBBER SYSTEM IS COMPLETED.
4. LOCATE NEW GAS EMISSION CHART RECORDER IN OPEN SPACE ON CONTROL PANEL.

Approved for Construction
Moffett Field Permit Board

Chief Building Official
Permit No. 11P002

ZONE	LETTER	DESCRIPTION	DRAWN	DATE	APPRVD

REVISIONS

DRAWN	J.HO	DATE 3/13/2012
DESIGNED	M.CALLAHAN	DATE 3/13/12
CHECKED	J.XIANG	DATE 3/13/12
PROJMGR	P.WAN	DATE 3/13/12
REQUESTER	R.OLIVARES	DATE 3/15/12
R&QA		DATE
SAFETY	D.FRASER	DATE 3/15/12
SUPERVISOR	S.FRANKEL	DATE 3/15/12

REGISTERED PROFESSIONAL ENGINEER — MICHAEL S. CALLAHAN — M 21393 — MECHANICAL — STATE OF CALIFORNIA

Ames Research Center
Moffett Field, California

STEAM VACUUM SYSTEM NOx EMISSION REDUCTION SYSTEM
MECHANICAL

PHOTOS & DETAILS

SIZE	CAGE CODE	REV
D	25307	A 334A-1000-M6
SCALE NONE	INDEX	SHEET OF

FILE NAME: A334A-1000-M06_1 03-12-2012

60220641

DWG: R:\2334A\60220641.0001 (K11035) NOx Scrubber Engrg Support\500_CAD.Rev3\MA\Sheet\A334A---1000-M06_1.dwg Version: 17.1s (LMS Tech) User: rschaef1
DATE: Mar 12, 2012 - 1:52:46 pm

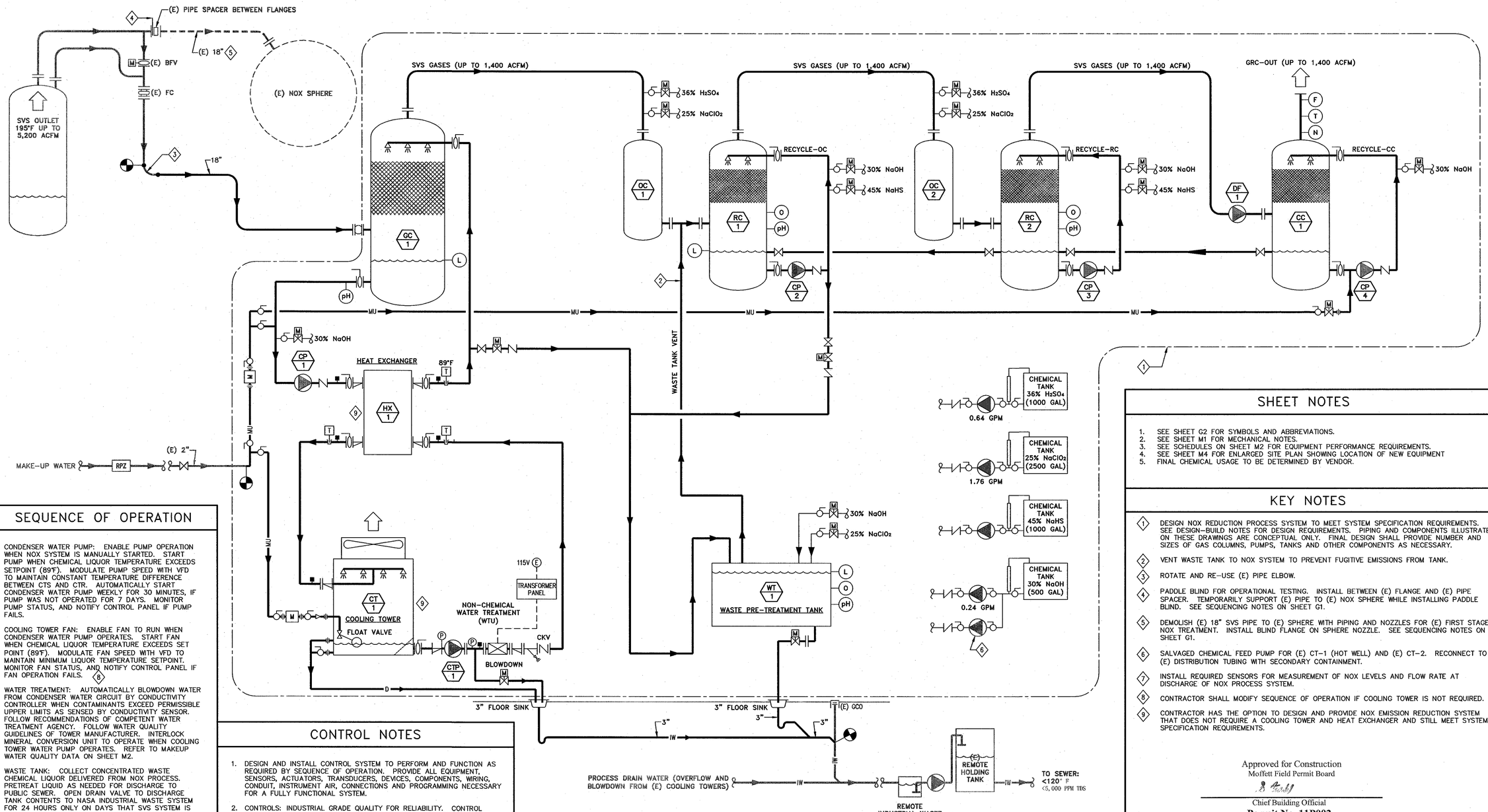

1 PIPING DIAGRAM
SCALE: NONE

SEQUENCE OF OPERATION

1. CONDENSER WATER PUMP: ENABLE PUMP OPERATION WHEN NOX SYSTEM IS MANUALLY STARTED. START PUMP WHEN CHEMICAL LIQUOR TEMPERATURE EXCEEDS SETPOINT (89°F). MODULATE PUMP SPEED WITH VFD TO MAINTAIN CONSTANT TEMPERATURE DIFFERENCE BETWEEN CTS AND CTR. AUTOMATICALLY START CONDENSER WATER PUMP WEEKLY FOR 30 MINUTES, IF PUMP WAS NOT OPERATED FOR 7 DAYS. MONITOR PUMP STATUS, AND NOTIFY CONTROL PANEL IF PUMP FAILS.
2. COOLING TOWER FAN: ENABLE FAN TO RUN WHEN CONDENSER WATER PUMP OPERATES. START FAN WHEN CHEMICAL LIQUOR TEMPERATURE EXCEEDS SET POINT (89°F). MODULATE FAN SPEED WITH VFD TO MAINTAIN MINIMUM LIQUOR TEMPERATURE SETPOINT. MONITOR FAN STATUS, AND NOTIFY CONTROL PANEL IF FAN OPERATION FAILS. (8)
3. WATER TREATMENT: AUTOMATICALLY BLOWDOWN WATER FROM CONDENSER WATER CIRCUIT BY CONDUCTIVITY CONTROLLER WHEN CONTAMINANTS EXCEED PERMISSIBLE UPPER LIMITS AS SENSED BY CONDUCTIVITY SENSOR. FOLLOW RECOMMENDATIONS OF COMPETENT WATER TREATMENT AGENCY. FOLLOW WATER QUALITY GUIDELINES OF TOWER MANUFACTURER. INTERLOCK MINERAL CONVERSION UNIT TO OPERATE WHEN COOLING TOWER WATER PUMP OPERATES. REFER TO MAKEUP WATER QUALITY DATA ON SHEET M2.
4. WASTE TANK: COLLECT CONCENTRATED WASTE CHEMICAL LIQUOR DELIVERED FROM NOX PROCESS. PRETREAT LIQUID AS NEEDED FOR DISCHARGE TO PUBLIC SEWER. OPEN DRAIN VALVE TO DISCHARGE TANK CONTENTS TO NASA INDUSTRIAL WASTE SYSTEM FOR 24 HOURS ONLY ON DAYS THAT SVS SYSTEM IS OPERATING. BALANCE FLOW RATE TO MAXIMUM GPM SO THAT TOTAL DAILY DISCHARGE DOES NOT EXCEED VOLUMETRIC LIMIT. VOLUMETRIC LIMIT IS CALCULATED SO TDS LEVEL DOES NOT EXCEED 5000 PPM AFTER MIXING WITH ASSUMED DAILY PROCESS DILUTION FLOW RATE OF 30,000 GAL PER DAY. DO NOT OPEN VALVE WHEN SVS IS NOT OPERATING.
5. HEAT EXCHANGER: NO CONTROL REQUIRED.
6. NOX SCRUBBER SYSTEM: DESIGN-BUILD CONTROL SYSTEM TO MEET PERFORMANCE, MONITORING AND SAFETY REQUIREMENTS AS SPECIFIED. PROVIDE SENSORS, TRANSMITTERS FOR EACH PARAMETER REQUIRED FOR STABLE CONTROL, AND AN INDICATOR OR READOUT FOR EACH PARAMETER SENSED. PROVIDE LOCAL (AT NOX STATION) MONITORING, CONTROL, AND NOX RECORDING, AND REMOTE MONITORING AND CONTROL FROM BOILER PLANT IN N234A WHEN SELECTED BY LOCAL SWITCH.

CONTROL NOTES

1. DESIGN AND INSTALL CONTROL SYSTEM TO PERFORM AND FUNCTION AS REQUIRED BY SEQUENCE OF OPERATION. PROVIDE ALL EQUIPMENT, SENSORS, ACTUATORS, TRANSDUCERS, DEVICES, COMPONENTS, WIRING, CONDUIT, INSTRUMENT AIR, CONNECTIONS AND PROGRAMMING NECESSARY FOR A FULLY FUNCTIONAL SYSTEM.
2. CONTROLS: INDUSTRIAL GRADE QUALITY FOR RELIABILITY. CONTROL VALVES AND ALL PIPING DEVICES SHALL CONFORM TO ASME B31.3. SUBMIT CUT SHEETS FOR ALL PROPOSED EQUIPMENT, INCLUDING WIRING DIAGRAMS AND CONTROL DETAILS. ALL CONTROL DEVICES, WIRING AND CONDUIT SHALL BE NEW. SPLICING OF WIRES IS NOT ACCEPTABLE.
3. INSTALL ALL WIRING AND CABLES IN CONDUIT PER ELECTRICAL SPECIFICATIONS. MINIMUM CONDUIT SIZE IS 3/4". INSTALL WIRING FOR CLASS 1 CIRCUITS (EQUAL OR >100 VA) AND CLASS 2 CIRCUITS (<100 VA) IN SEPARATE CONDUITS. SEE ELECTRICAL DRAWINGS FOR OTHER RELATED WORK.
4. GROUND LOW VOLTAGE ANALOG TSP CABLE SHIELD IN LOCAL PANEL. GROUND LOW VOLTAGE TSP CABLE FOR DIGITAL CONTROLS AT FIELD DEVICE.
5. COORDINATE NEW CONTROLS WITH EXISTING FUNCTIONS OF BOILER PLANT CONTROL AND MONITORING SYSTEM. THERE IS NO CONTROL INTERFACE BETWEEN THE NEW NOX REDUCTION SYSTEM AND THE EXISTING BOILER CONTROLS, JUST PHYSICAL INTERFACE OF LOCATING THE NOX REDUCTION SYSTEM CONTROL AND MONITORING PANEL IN THE EXISTING BOILER CONTROLS PANEL IN N234A.

SHEET NOTES

1. SEE SHEET G2 FOR SYMBOLS AND ABBREVIATIONS.
2. SEE SHEET M1 FOR MECHANICAL NOTES.
3. SEE SCHEDULES ON SHEET M2 FOR EQUIPMENT PERFORMANCE REQUIREMENTS.
4. SEE SHEET M4 FOR ENLARGED SITE PLAN SHOWING LOCATION OF NEW EQUIPMENT
5. FINAL CHEMICAL USAGE TO BE DETERMINED BY VENDOR.

KEY NOTES

1. DESIGN NOX REDUCTION PROCESS SYSTEM TO MEET SYSTEM SPECIFICATION REQUIREMENTS. SEE DESIGN-BUILD NOTES FOR DESIGN REQUIREMENTS. PIPING AND COMPONENTS ILLUSTRATED ON THESE DRAWINGS ARE CONCEPTUAL ONLY. FINAL DESIGN SHALL PROVIDE NUMBER AND SIZES OF GAS COLUMNS, PUMPS, TANKS AND OTHER COMPONENTS AS NECESSARY.
2. VENT WASTE TANK TO NOX SYSTEM TO PREVENT FUGITIVE EMISSIONS FROM TANK.
3. ROTATE AND RE-USE (E) PIPE ELBOW.
4. PADDLE BLIND FOR OPERATIONAL TESTING. INSTALL BETWEEN (E) FLANGE AND (E) PIPE SPACER. TEMPORARILY SUPPORT (E) PIPE TO (E) NOX SPHERE WHILE INSTALLING PADDLE BLIND. SEE SEQUENCING NOTES ON SHEET G1.
5. DEMOLISH (E) 18" SVS PIPE TO (E) SPHERE WITH PIPING AND NOZZLES FOR (E) FIRST STAGE NOX TREATMENT. INSTALL BLIND FLANGE ON SPHERE NOZZLE. SEE SEQUENCING NOTES ON SHEET G1.
6. SALVAGED CHEMICAL FEED PUMP FOR (E) CT-1 (HOT WELL) AND (E) CT-2. RECONNECT TO (E) DISTRIBUTION TUBING WITH SECONDARY CONTAINMENT.
7. INSTALL REQUIRED SENSORS FOR MEASUREMENT OF NOX LEVELS AND FLOW RATE AT DISCHARGE OF NOX PROCESS SYSTEM.
8. CONTRACTOR SHALL MODIFY SEQUENCE OF OPERATION IF COOLING TOWER IS NOT REQUIRED.
9. CONTRACTOR HAS THE OPTION TO DESIGN AND PROVIDE NOX EMISSION REDUCTION SYSTEM THAT DOES NOT REQUIRE A COOLING TOWER AND HEAT EXCHANGER AND STILL MEET SYSTEM SPECIFICATION REQUIREMENTS.

Approved for Construction
Moffett Field Permit Board
Chief Building Official
Permit No. 11P002

ZONE	LETTER	DESCRIPTION	DRAWN	DATE	APPRVD

REVISIONS

DRAWN J.HO	DATE 3/15/2012	
DESIGNED M.CALLAHAN	DATE 3/13/12	
CHECKED J.XIANG	DATE 3/13/12	
PROJMGR P.WAN	DATE 3/14/12	
REQUESTER R.OLIVARES	DATE 3/14/12	
R&QA	DATE	
SAFETY D.FRASER	DATE 3/15/12	
SUPERVISOR S.FRANKEL	DATE 3/15/12	
	DATE	

REGISTERED PROFESSIONAL ENGINEER — DANIEL S. CALLAHAN — No. M 21188 — MECHANICAL — STATE OF CALIFORNIA

NASA — **Ames Research Center** — Moffett Field, California

STEAM VACUUM SYSTEM NOx EMISSION REDUCTION SYSTEM
MECHANICAL

PROCESS PIPING DIAGRAM

SIZE	CAGE CODE	REV
D	25307	A 334A-1000-M7
SCALE	NONE	INDEX / SHEET / OF

FILE NAME: A334A-1000-M07_1 03-12-2012

60220641

DWG: R:\234\60220641.0001 (K11035) NOx Scrubber Engrg Support\500_CAD.Rev3\M\Sheet\A334A-----1000-M07_1.dwg Version: 18.1s (LMS Tech) User: jjho
DATE: Mar 14, 2012 - 3:22:56 pm

SHEET NOTES

1. SEE SHEET G2 FOR SYMBOLS AND ABBREVIATIONS.
2. SEE SHEET M1 FOR MECHANICAL NOTES.
3. FINISH OF ALL PIPE SUPPORTS TO BE GALVANIZED U.O.N.

KEY NOTES

1. FINISH TO MATCH EXISTING PIPE SUPPORT.
2. FINISH TO MATCH EXISTING SIMILAR PIPE SUPPORTS ON VERTICAL LEG OF 18" PIPE.
3. PIPE SUPPORT FOUNDATION LOAD TABLE AS SHOWN BELOW SHALL BE INTEGRATED INTO NOx EMISSION REDUCTION SYSTEM DESIGN-BUILD FOUNDATION:

DESIGN-BUILD PIPE SUPPORT FOUNDATION LOAD

PIPE SUPPORT	LOAD CASE	Fx (LBS)	Fy (LBS)	Fz (LBS)
PS-4A	DL	-2	50	0
	TL	0	2	0
	ELX (1)	-901	4493	0
	ELY (1)	0	-9	0
	ELZ (1)	0	0	-20
	WLX (1)	-94	457	0
	WLZ (1)	0	0	-28
PS-4B	DL	-1	38	0
	TL	0	-2	0
	ELX (1)	-1235	-4493	0
	ELY (1)	0	-9	0
	ELZ (1)	0	0	-20
	WLX (1)	-133	-457	0
	WLZ (1)	0	0	-28

NOTE: (1) LOADS ARE REVERSIBLE

4. SEE STRUCTURAL DRAWING FOR PIPE SUPPORT FOUNDATION DETAIL.
5. SEE STRUCTURAL DRAWING FOR ANCHOR BOLT DETAIL.

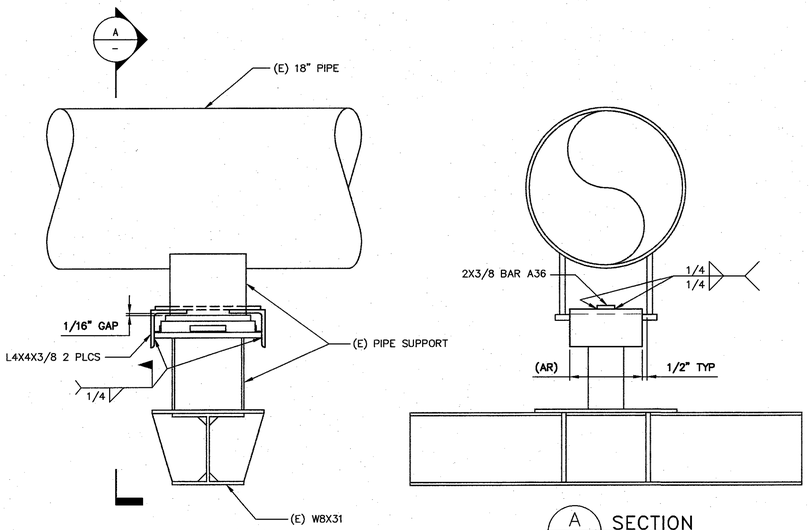

1 (E) PS-1 MODIFICATION
M4 M8 SCALE: 1-1/2" = 1'-0"

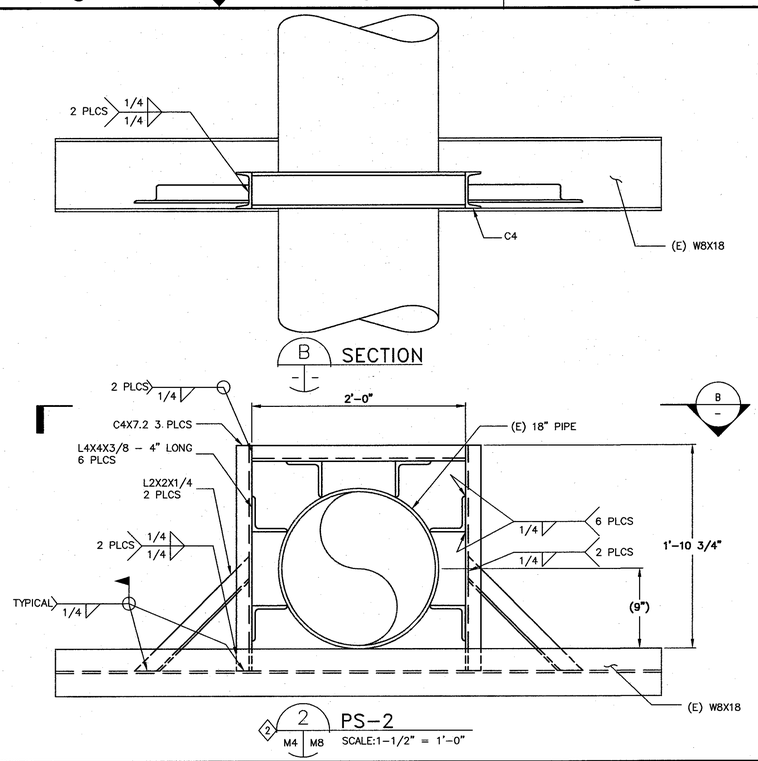

2 PS-2
M4 M8 SCALE:1-1/2" = 1'-0"

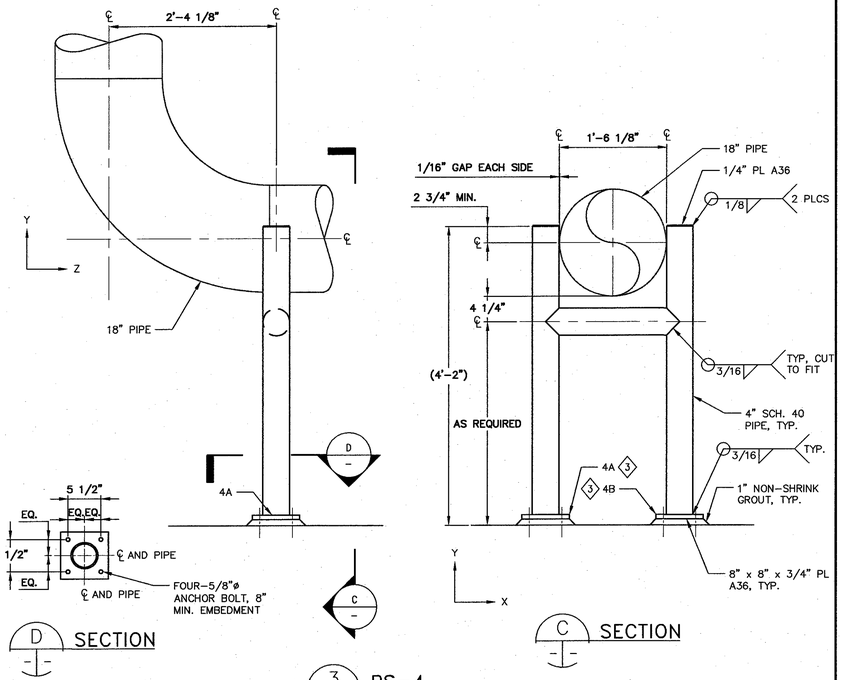

3 PS-4
M4 M8 SCALE: 1" = 1'-0"

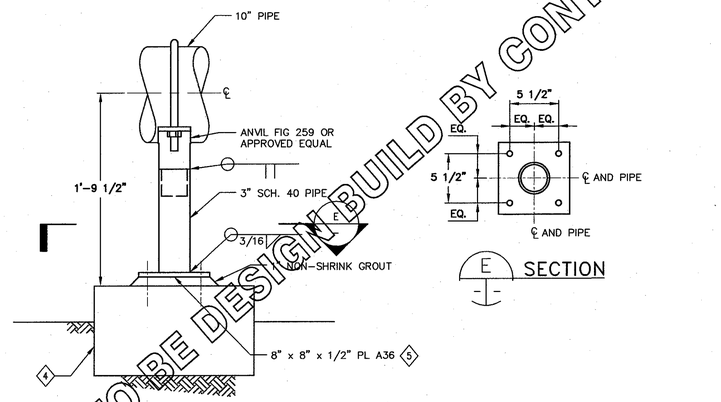

4 PS-9
M5 M8 SCALE: 1-1/2" = 1'-0"

SUPPORT TO BE DESIGN-BUILD BY CONTRACTOR

REGISTERED PROFESSIONAL ENGINEER MITA FROOZ No. 3835 STRUCTURAL STATE OF CALIFORNIA

Approved for Construction
Moffett Field Permit Board
Chief Building Official
Permit No. 11P002

ZONE	LETTER	DESCRIPTION	DRAWN	DATE	APPRVD

REVISIONS

DRAWN J.HO	DATE 3/13/2012	**Ames Research Center** Moffett Field, California
DESIGNED J.VAN CORTENCH	DATE 3/13/12	STEAM VACUUM SYSTEM NOx EMISSION REDUCTION SYSTEM
CHECKED A.FIROUZ	DATE 3/14/12	MECHANICAL
PROJMGR P.WAN	DATE 3/13/12	PIPE SUPPORT DETAILS
REQUESTER R.OLIVARES	DATE 3/13/12	
R&QA	DATE	
SAFETY D.FRASER	DATE 3/15/12	SIZE D · CAGE CODE 25307 · REV A
SUPERVISOR S.FRANKEL	DATE 3-15-12	SCALE NONE · INDEX · SHEET · OF
	DATE	FILE NAME: A334A-1000-M08_1 · 03-12-2012

60220641

DWG: R:\334A\60220641-0001 (K11035) NOx Scrubber Engrg Support\500_CAD\Rev3\M\Sheet\A334A---1000-M08_1.dwg Version: 17.1s (LMS Tech) User: rschaef1
DATE: Mar 12, 2012 - 1:57:18 pm

DWG NO. A334A-1000-M9 | SH. | REV

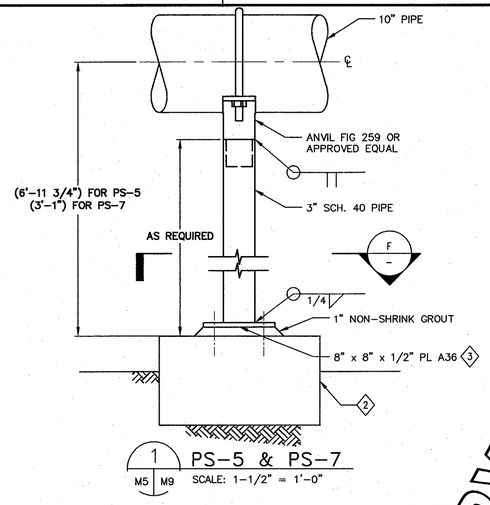

1 PS-5 & PS-7
M5 | M9 SCALE: 1-1/2" = 1'-0"

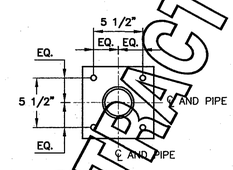

F SECTION

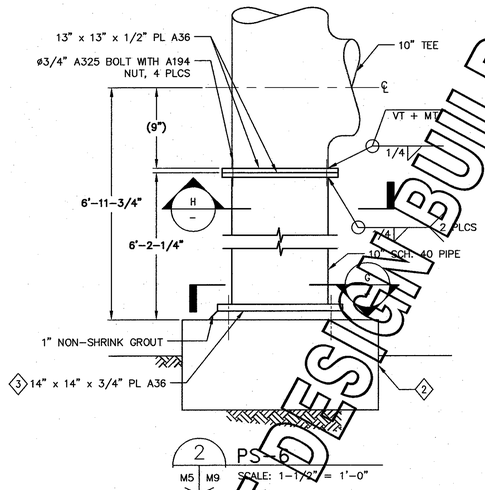

2 PS-6
M5 | M9 SCALE: 1-1/2" = 1'-0"

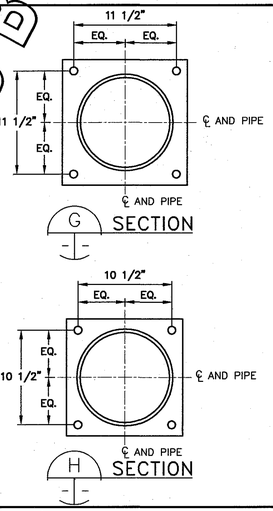

G SECTION

H SECTION

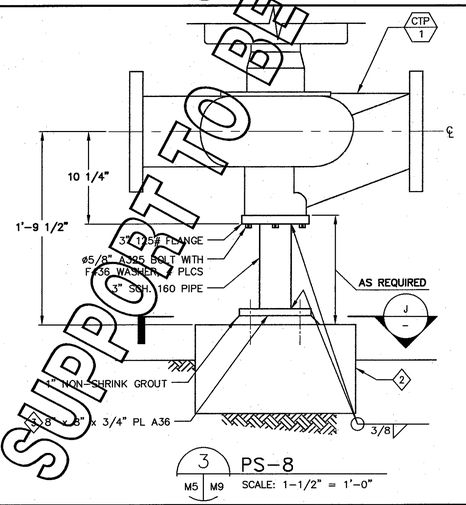

3 PS-8
M5 | M9 SCALE: 1-1/2" = 1'-0"

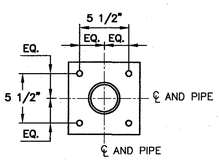

J SECTION

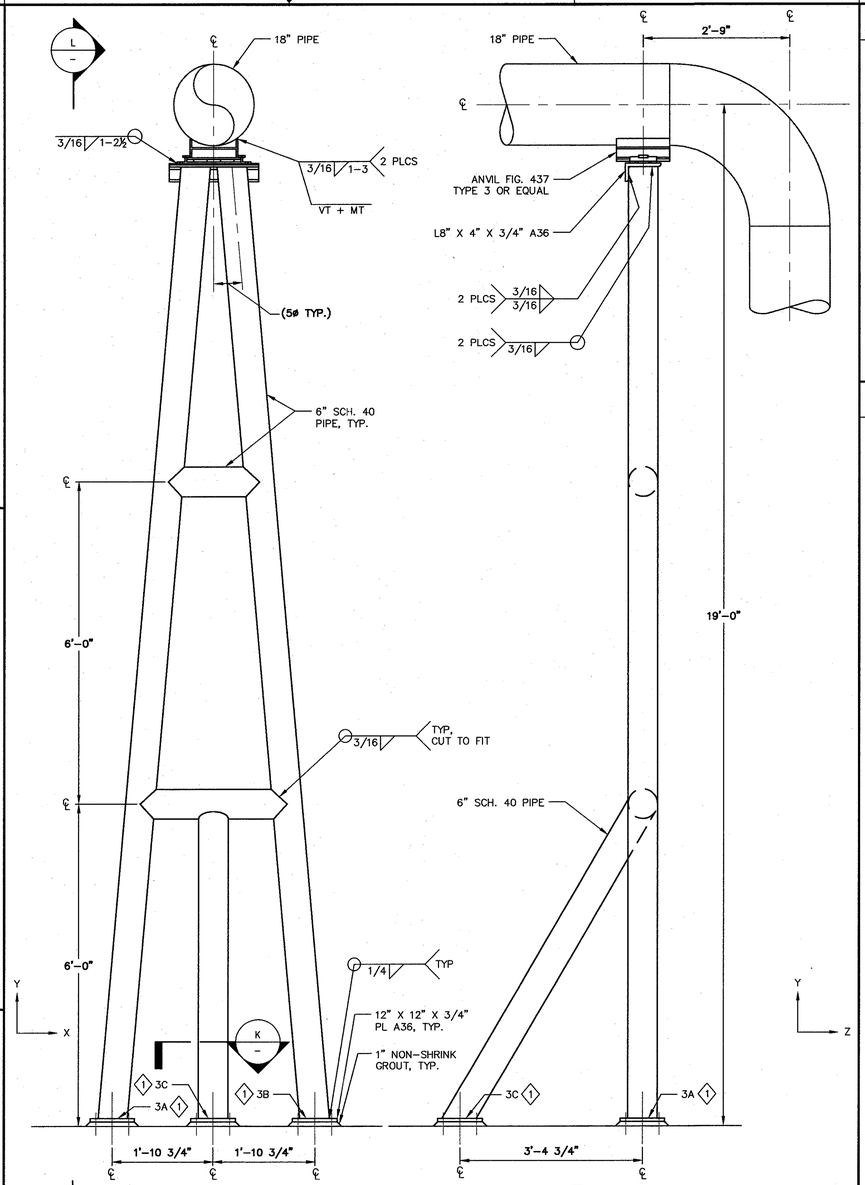

L SECTION

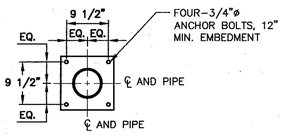

K SECTION

4 PS-3
M4 | M9 SCALE: 3/4" = 1'-0"

SHEET NOTES

1. SEE SHEET G2 FOR SYMBOLS AND ABBREVIATIONS.
2. SEE SHEET M1 FOR MECHANICAL NOTES.
3. FINISH OF ALL PIPE SUPPORTS TO BE GALVANIZED U.O.N.
4. ALL SUPPORT WELDS TO PIPE AND ASME WELDS TO BE INSPECTED PER ASME REQUIREMENTS. INSPECTIONS OF PIPE TO SUPPORT WELD ARE TO BE PERFORMED PRIOR TO PIPE HYDROSTATIC TEST.

KEY NOTES

1 PIPE SUPPORT FOUNDATION LOAD TABLE AS SHOWN BELOW SHALL BE INTEGRATED INTO NOX EMISSION REDUCTION SYSTEM DESIGN-BUILD FOUNDATION:

DESIGN-BUILD PIPE SUPPORT FOUNDATION LOAD

PIPE SUPPORT	LOAD CASE	Fx (LBS)	Fy (LBS)	Fz (LBS)
PS-3A	DL	-155	1797	2
	TL	1	-13	0
	ELX (1)	-1924	19199	-93
	ELY (1)	-88	998	0
	ELZ (1)	51	-432	51
	WLX (1)	-254	2359	-15
	WLZ (1)	36	-306	36
PS-3B	DL	150	1746	2
	TL	-3	-33	0
	ELX (1)	-2002	-19210	101
	ELY (1)	88	997	0
	ELZ (1)	-51	-432	51
	WLX (1)	-266	-2331	15
	WLZ (1)	-36	-306	36
PS-3C	DL	0	61	-5
	TL	0	0	0
	ELX (1)	-133	11	-9
	ELY (1)	0	-13	1
	ELZ (1)	0	865	-479
	WLX (1)	-36	0	0
	WLZ (1)	0	612	-339

NOTE: (1) LOADS ARE REVERSIBLE

2 SEE STRUCTURAL DRAWING FOR PIPE SUPPORT FOUNDATION DETAIL.

3 SEE STRUCTURAL DRAWING FOR ANCHOR BOLT DETAILS.

Approved for Construction
Moffett Field Permit Board

Chief Building Official
Permit No. 11P002

ZONE	LETTER	DESCRIPTION	DRAWN	DATE	APPRVD

REVISIONS

DRAWN J.HO	DATE 3/13/2012	
DESIGNED J.VAN CORBACH	DATE 3/13/12	Ames Research Center, Moffett Field, California
CHECKED A.FIROUZI	DATE 3/14/12	STEAM VACUUM SYSTEM NOx EMISSION REDUCTION SYSTEM
PROJMGR P.WAN	DATE 3/13/12	MECHANICAL
REQUESTER R.OLIVARES	DATE 3/13/12	PIPE SUPPORT DETAILS
R&QA	DATE	
SAFETY D.FRASER	DATE 3/20/12	
SUPERVISOR S.FRANKEL	DATE 3/19/12	

SIZE D | CAGE CODE 25307 | A 334A-1000-M9 | REV
SCALE NONE | INDEX | SHEET | OF
FILE NAME: A334A-1000-M09_1 03-12-2012

60220641

SUPPORT TO BE DESIGN BUILD BY CONTRACTOR

REGISTERED PROFESSIONAL ENGINEER ANITA FIROUZI No. 7536 STRUCTURAL STATE OF CALIFORNIA

DWG: R:\234A\60220641.0001 (K11035) NOx Scrubber Engrg Support\500_CAD.Rev3\M\Sheet\A334A---1000-M09_1.dwg Version: 17.1s (LMS Tech) User: rschaef1
DATE: Mar 12, 2012 - 1:58:19 pm

DWG NO. A334A-1000-E1 | SH. | REV

ELECTRICAL NOTES

1. THE COMPLETE ELECTRICAL INSTALLATION SHALL BE IN ACCORDANCE WITH THE CALIFORNIA ELECTRICAL CODE, 2007 AND NATIONAL ELECTRICAL SAFETY CODE (LATEST EDITION).
2. CONDUCTOR SIZES ARE AWG & kCMIL, U.O.N.
3. ALL ELECTRICAL ITEMS SHALL BE NEW U.O.N.
4. DARK OR HEAVY LINES INDICATE NEW WORK. LIGHT LINES DENOTE EXISTING CONDITIONS.
5. EXISTING CONDITIONS: THESE DRAWINGS SHOW EXISTING EQUIPMENT, MATERIAL, WIRING, ETC. BASED UPON THE BEST AVAILABLE INFORMATION. CONTRACTOR SHALL CONFIRM EXISTING CONDITIONS, WIRING, LOCATION OF EQUIPMENT, DIMENSIONS, ETC PRIOR TO STARTING ANY WORK OR ORDERING ANY MATERIAL. CONTRACTOR SHALL BE RESPONSIBLE FOR LOCATING EXISTING UNDERGROUND UTILITIES, CORRECTING DISCREPANCIES AND PROVIDING A COMPLETE PROPER OPERATING SYSTEM.
6. WHEN USED IN THESE DRAWINGS AND THE ACCOMPANYING SPECIFICATIONS THE FOLLOWING DEFINITIONS APPLY:

   FURNISH: CONTRACTOR TO SUPPLY AND DELIVER COMPLETE.

   INSTALL: CONTRACTOR TO PLACE, SECURE AND CONNECT AND TEST AS REQUIRED TO MAKE FULLY OPERATIONAL.

   PROVIDE: CONTRACTOR TO FURNISH AND INSTALL AS DEFINED ABOVE.
7. EXISTING EQUIPMENT AND/OR ELECTRICAL WIRING WHICH IS TO REMAIN, BUT HAS TO BE REMOVED TO FACILITATE THE INSTALLATION OF THE NEW EQUIPMENT SHALL BE RESTORED TO ITS ORIGINAL OPERATING CONDITION.
8. ELECTRICAL EQUIPMENT AND RACEWAYS SHALL BE SUPPORTED AND ANCHORED IN ACCORDANCE WITH CALIFORNIA BUILDING CODE SEISMIC REQUIREMENTS.
9. EXISTING CONDUCTORS REMOVED FROM SERVICE SHALL NOT BE USED IN NEW WORK UNDER THIS CONTRACT, UNLESS OTHERWISE NOTED.
10. PROVIDE ENGRAVED NAMEPLATES ON ALL NEW AND AFFECTED EXISTING EQUIPMENT AND DEVICES INCLUDING PULL BOXES. NAMEPLATES SHALL BE SCREWED ON PHENOLIC TYPE WITH WHITE LETTERS ON BLACK BACKGROUND. THE NAMEPLATE SHALL BE OF APPROPRIATE SIZE WITH LETTER HEIGHTS PER SPECIFICATIONS, AND SUBJECT TO APPROVAL BY THE CONTRACTING OFFICER.
11. ALL POWER SHUTDOWN SHALL BE SCHEDULED ON WEEKENDS OR HOLIDAYS OR WITH PRIOR WRITTEN APPROVAL BY THE CONTRACTING OFFICER.
12. THE CONTRACTOR SHALL SUBMIT A UTILITY OUTAGE REQUEST AND EXPECTED LENGTH OF THE POWER INTERRUPTION TO THE CONTRACTING OFFICER FOR APPROVAL IN NO LESS THAN TWENTY ONE (21) CALENDAR DAYS PRIOR TO A REQUIRED UTILITY OUTAGE (ELECTRICAL, TELEPHONE). NO OUTAGE SHALL BE ACCOMPLISHED PRIOR TO THE RECEIPT OF APPROVAL. NASA SHALL PERFORM ALL SWITCHING 6900V AND ABOVE. THE CONTRACTOR SHALL PERFORM ALL SWITCHING BELOW 6900V. THE CONTRACTOR/NASA–AMES SHALL LOCK OUT AND RED TAG THE APPROPRIATE CIRCUIT BREAKER, SWITCH, ETC. THE RED TAG SHALL LIST THE CIRCUIT, THE TIME OF OUTAGE, THE INDIVIDUAL AND FIRM EFFECTING THE OUTAGE, THE EXPECTED TIME THE OUTAGE WILL BE TERMINATED, AND PHONE NUMBER TO CONTACT REGARDING THE OUTAGE. THE TAG SHALL ALSO WARN PEOPLE NOT TO RE–ENERGIZE THE CIRCUIT SYSTEM BECAUSE THE POTENTIAL DANGER TO PERSONNEL/EQUIPMENT. TIMES FOR THESE SHUTDOWNS ARE FROM 6:00 AM, SATURDAY MORNING TO 5:00 PM, SUNDAY AFTERNOON; AND FROM 6:00 AM TO 5:00 PM ON HOLIDAYS.
13. POWER DISRUPTION OVER 48 HOURS MAY CAUSE THE LOSE OF THE FIRE ALARM SYSTEM SERVICE. CONTRACTOR SHALL NOTIFY THE FIRE DEPARTMENT OF THE LOSS OF ALARMS IF THIS OCCURS.
14. CONTRACTOR SHALL STRICTLY FOLLOW ALL STANDARD SAFETY PRACTICES, PRECAUTIONS, AND REQUIREMENTS OF NASA–AMES RESEARCH CENTER FOR ALL WORK INSIDE AN ENCLOSED AND ENERGIZED 115kV SUBSTATION. REFER TO AMES HEALTH & SAFETY MANUAL APR 1700.1.
15. ALL WIRES SHALL BE TAGGED FOR IDENTIFICATION BEFORE DISCONNECTION.
16. REPLACEMENT OF OTHER UNDERGROUND MEDIUM VOLTAGE DISTRIBUTION LINES, MANHOLES AND VAULTS, BY ANOTHER CONTRACTOR, MAY BE SCHEDULED DURING THE CONSTRUCTION PERIOD OF THIS CONTRACT. ALL WORK IN THIS CONTRACT SHALL BE COORDINATED WITH THE CONTRACTING OFFICER TO AVOID CONFLICT OF ACTIVITIES WITH OTHER CONTRACTS IN PROGRESS.
17. REPAIR DAMAGES TO GALVANIZED STEEL MEMBERS USING ASTM A780 ZINC RICH PAINT. PAINT ALL NEW HOLES DRILLED ON EXISTING GALVANIZED STEEL MEMBERS. DO NOT HEAT SURFACES TO WHICH REPAIR PAINT HAS BEEN APPLIED.
18. FIRE PROOFING TAPE SHALL BE WRAPPED AROUND EACH CABLE BEING WORKED ON IN THE MANHOLE, STARTING AND FINISHING OF FIRE PROOFING SHALL BE DONE WITH APPROVED FIBERGLASS TAPE.
19. ALL CABLES SHALL BE SUPPORTED PROPERLY AND ROUTED NEATLY ALONG THE MANHOLE WALL. ALL NEW SPARE CONDUITS SHALL BE PROVIDED WITH A 1/4" NYLON PULL WIRE PRIOR TO CAPPING. PROVIDE IDENTIFICATION LABELS AND TAG SPARE CONDUITS INDICATING ORIGIN AND DESTINATION AT BOTH ENDS.
20. NEW CONDUITS SHALL BE SEALED AND FIRE PROOFED AT ENTRIES TO MANHOLES/VAULTS.
21. ALL MV FEEDER CABLES SHALL HAVE PHASE IDENTIFICATION AND FEEDER TAGS IN MANHOLES.
22. CABLE AND WIRE USED SHALL MEET THE FOLLOWING:
    FOR SIZES #1 AND SMALLER CABLES SHALL BE RATED FOR 60°C, MINIMUM.
    FOR SIZES #1/0 AND LARGER CABLES SHALL BE RATED FOR 75°C, MINIMUM.
23. ALL PENETRATIONS THROUGH FIRE RATED WALLS SHALL BE TOTALLY SEALED TO PREVENT THE SPREAD OF SMOKE, FIRE, TOXIC GASES, AND WATER THROUGH THE PENETRATION BEFORE, DURING AND AFTER A FIRE CONDITION. THE FIRE RATING OF THE SEALED PENETRATION SHALL BE AT LEAST THAT OF THE WALL INTO WHICH IT IS INSTALLED. THE SEAL SHALL PERMIT THE VIBRATION, EXPANSION AND/OR CONTRACTION OF THE CONDUIT PASSING THROUGH THE PENETRATION WITHOUT THE SEAL CRACKING OR CRUMBLING. CONFORM TO CEC, 2007.
24. PRIOR TO START OF WORK, CONTRACTOR SHALL SUBMIT A COMPREHENSIVE SAFETY PROGRAM TO THE CONTRACTING OFFICER FOR APPROVAL BY THE NASA SAFETY OFFICE. ALL SAFETY ITEMS WILL BE DISCUSSED AT THE PRE–CONSTRUCTION MEETING.
25. PROVIDE FIELD MARKINGS OF PROPER WARNING LABELS FOR ARC FLASH AND SHOCK HAZARD PROTECTION ON ALL SWITCHBOARDS, PANELBOARDS, INDUSTRIAL CONTROL PANELS AND MOTOR CONTROL CENTERS IN ACCORDANCE WITH CEC. WARNING LABELS SHALL CONFORM TO APPLICABLE PROVISIONS OF NFPA 70E AND ANSI Z535.4, AND SUBJECT TO APPROVAL BY THE CONTRACTING OFFICER.
26. PRIOR TO ENERGIZATION OF EQUIPMENT OR CIRCUITS, THE CONTRACTOR SHALL DEVELOP A TEST PROCEDURE AND SUBMIT IT TO THE CONTRACTING OFFICER FOR REVIEW AND APPROVAL. THE CONTRACTOR SHALL PERFORM A COMPLETE FUNCTIONAL TEST TO DEMONSTRATE TO THE CONTRACTING OFFICER THAT THE NEW INSTALLATION IS OPERATING AS INTENDED. ANY DEFECTS OR DEFICIENCIES IN THE MATERIALS OR INSTALLATION WORK SHALL BE CORRECTED IMMEDIATELY BY AND AT THE CONTRACTOR'S EXPENSE.

ELECTRICAL NOTES

27. PROVIDE GROUND FAULT PROTECTION EQUIPMENT FOR EACH SERVICE, FEEDER AND BRANCH CIRCUIT BREAKER OR DISCONNECT RATED 1000A OR MORE ON SOLIDLY GROUNDED SYSTEM OF MORE THAN 150V TO GROUND (AT 480Y/277V) IN ACCORDANCE WITH CEC.
28. ALL PERSONNEL WORKING IN MANHOLES (MH) SHALL BE CERTIFIED IN ACCORDANCE WITH OSHA CONFINED SPACE REGULATION 29 CFR 1910.146 AND CAL OSHA CONFINED SPACE REGULATIONS CCR5156,5157,5158 AND 5159.
29. CERTIFICATION OF THE QUALIFICATIONS OF THE MEDIUM VOLTAGE (MV) CABLE SPLICER/TERMINATOR SHALL BE SUBMITTED TO THE CONTRACTING OFFICER. THE CERTIFICATION SHALL INCLUDE THE TRAINING AND EXPERIENCE OF THE INDIVIDUAL. THE CERTIFICATION SHALL INDICATE THAT THE INDIVIDUAL HAS HAD THREE OR MORE YEARS OF EXPERIENCE SPLICING AND TERMINATING MEDIUM VOLTAGE CABLES. ONCE A MV TERMINATION OR SPLICE HAS BEEN STARTED BY A WORKER, THE SAME PERSON SHALL COMPLETE THAT PARTICULAR SPLICE. EACH MV TERMINATION AND SPLICE SHALL BE STARTED AND COMPLETED IN ONE CONTINUOUS WORK PERIOD.
30. CONTRACTOR SHALL USE EXTREME CAUTION AND TAKE ALL NECESSARY SAFETY PRECAUTIONS WHEN WORKING IN THE MANHOLES. MULTIPLE SYSTEM VOLTAGES MAY EXIST IN THE MANHOLES AND CAN BE ANY COMBINATION OF THE FOLLOWING:
    13.8KV
    12KV
    6.9KV
    480V
    208Y/120V
    480Y/277V
    COMM CIRCUITS
31. THE CONTRACTOR SHALL PROVIDE CABLE RACK CHANNELS, ARMS AND INSULATORS TO SUPPORT NEW CABLES, SPLICES, AND DEADBREAK JUNCTIONS IF NECESSARY.
32. ALL NEW CONDUITS AND CONDUIT DUCT BANKS SHALL BE SLOPED DOWN IN THE DIRECTION OF THE EXISTING MANHOLES.

ELECTRICAL ABBREVIATIONS

A	AMPERE
AC	AIR CONDITIONER
AF	AMPERE FRAME OR FUSE RATING
AFF	ABOVE FINISHED FLOOR
ARF	ABOVE RAISED FLOOR
AWG	AMERICAN WIRE GAUGE
C	CONDUIT
CB	CIRCUIT BREAKER
CKT, CKTS	CIRCUIT/S
CLG.	CEILING
CO	CONDUIT ONLY
CORR	CORRIDOR
COTR	CONTRACTING OFFICER TECHNICAL REPRESENTATIVE
DE	DIESEL ENGINE
DET	DETAIL
DWG	DRAWING
(ER)	EXISTING TO BE RELOCATED
ELEC	ELECTRIC(AL)
EMT	ELECTRICAL METALLIC TUBING
FACP	FIRE ALARM CONTROL PANEL
FDS	FUSED DISCONNECT SWITCH
FMC	FLEXIBLE METAL CONDUIT
G; GND	GROUND(ED)
GFE	GOVERNMENT FURNISHED EQUIPMENT
GFI	GROUND FAULT INTERRUPTER
GSE	GROUND SUPPORT EQUIPMENT
HP	HORSE POWER
KCMIL	THOUSAND CIRCULAR MILS
KVA	KILOVOLT AMPERE
JB	JUNCTION BOX
MCCB	MOLDED CASE CIRCUIT BREAKER
N	NEW
NEC	NATIONAL ELECTRICAL CODE
NEMA	NATIONAL ELECTRICAL MANUFACTURER'S ASSOCIATION
NIC	NOT IN CONTRACT
NTS	NOT TO SCALE
P	POLE
PB	PULLBOX
PBS	PUSHBUTTON STATION
PCB	POLY CHLORINATED BIPHENYL
PH	PHASE
PNL	PANEL
(R)	RELOCATED
RECP	RECEPTACLE
RGS	RIGID GALVANIZED STEEL
RM	ROOM
RMC	RIGID METAL CONDUIT
SPEC	SPECIFICATIONS
TEL	TELEPHONE
TYP	TYPICAL
UON	UNLESS OTHERWISE NOTED
UPS	UNINTERRUPTIBLE POWER SUPPLY
V	VOLT
W	WIRE
W/	WITH
W/O	WITHOUT
XFMR	TRANSFORMER
ZAM	ZONE ADDRESSABLE INTERFACE MODULE

ELECTRICAL SYMBOLS

- 400AT / 800AF — DRAWOUT CIRCUIT BREAKER
- 400AT / 800AF — MOLDED CASE CIRCUIT BREAKER
- REACTOR
- (M) — MOTOR
- (HP) — MOTOR 3 PHASE, HORSE POWER AS INDICATED
- WALL MOUNTED EXTERIOR LIGHTING FIXTURE
- DISCONNECT SWITCH, NON FUSED
- MOTOR STARTER
- VFD — VARIABLE FREQUENCY DRIVE
- CONDUIT TURNED UP
- CONDUIT TURNED DOWN
- (J) — JUNCTION BOX
- PB — PULLBOX
- GFCI — DUPLEX RECEPTACLE, WALL MOUNTED 125V, 20A, NEMA 5–20R, W/GROUND FAULT PROTECTION

Approved for Construction
Moffett Field Permit Board
Chief Building Official
Permit No. 11P002

REGISTERED PROFESSIONAL ENGINEER — FREDERICK M. JONES — No. E14816 — ELECTRICAL — STATE OF CALIFORNIA

3.14.12

ZONE	LETTER	DESCRIPTION	DRAWN	DATE	APPRVD

REVISIONS

DRAWN N. NIZAMOVA	DATE 3-13-12	
DESIGNED N. NIZAMOVA	DATE 3-13-12	
CHECKED J. McCUSKER	DATE 3-14-12	
PROJMGR P.WAN	DATE 3/13/12	
REQUESTER R.OLIVARES	DATE 3/15/12	
R&OA	DATE	
SAFETY	DATE	
SUPERVISOR S.FRANKEL	DATE 3-15-12	
	DATE	

Ames Research Center
Moffett Field, California

STEAM VACUUM SYSTEM NOx EMISSION REDUCTION SYSTEM
GENERAL

ELECTRICAL NOTES, SYMBOLS & ABBREVIATIONS

SIZE	CAGE CODE	REV
D	25307	A
SCALE	NONE	INDEX / SHEET OF

FILE NAME: A334A-1000-E1 03-12-2012

60220641

DWG: R:\234A\60220641.0001 (K110035) NOx Scrubber Engrg Support\500_CAD.Rev3\E\Sheet\A334A---1000-E01.dwg Version: 18.1s (LMS Tech) User: jlho
DATE: Mar 12, 2012 - 2:29:46 pm

DWG NO.	SH.	REV
A334A-1000-E2		

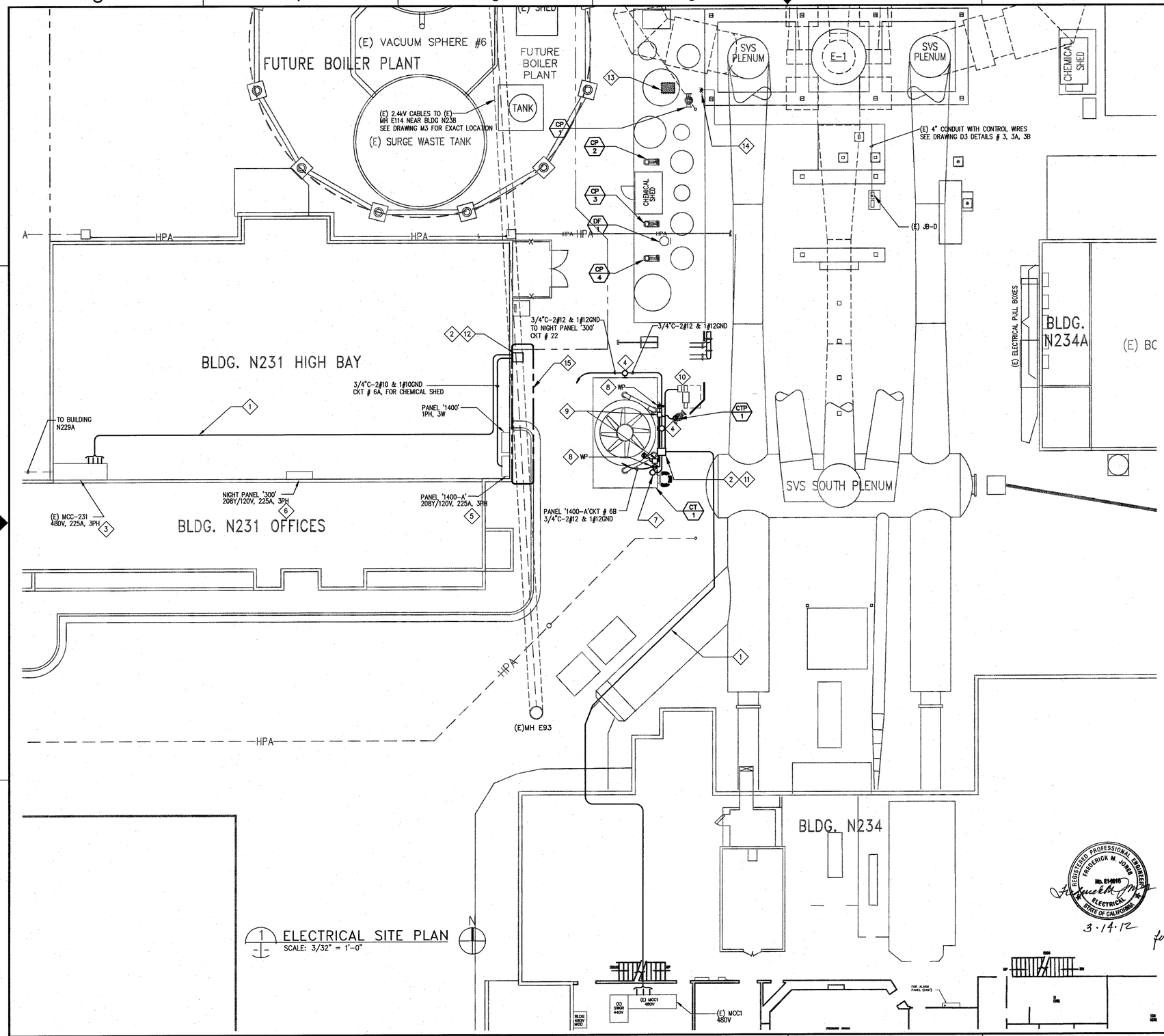

SHEET NOTES

1. CONTRACTOR SHALL FIELD VERIFY ALL MEASUREMENTS AT THE SITE AND SHALL BE RESPONSIBLE FOR THEIR ACCURACY PRIOR TO STARTING ANY WORK OR ORDERING ANY MATERIAL.
2. ELECTRICAL EQUIPMENT AND FEEDERS SHALL BE SUPPORTED AND ANCHORED IN ACCORDANCE WITH CALIFORNIA BUILDING CODE SEISMIC REQUIREMENTS.
3. CONTRACTOR SHALL BE RESPONSIBLE FOR HAVING VISITED THE SITE AND SATISFIED HIMSELF AS TO THE CONDITIONS UNDER WHICH THE WORK WILL BE PERFORMED. THE CONTRACTOR SHALL CHECK ALL EXISTING CONDITIONS WHICH MAY AFFECT HIS WORK. NO ALLOWANCE WILL BE MADE FOR ANY EXTRA EXPENSE WHICH MAY BE INCURRED DUE TO NEGLECT OR FAILURE TO EXAMINE THE SITE, EXISTING CONDITIONS, UTILITIES, ETC. THE SITE VISIT SHALL BE DURING THE BID WALK AND/OR PREARRANGED WITH THE CONTRACTING OFFICER.
4. MANUFACTURER'S RECOMMENDATIONS FOR CONDUCTOR SIZING, CIRCUIT BREAKER OR FUSE RATING OF ELECTRICALLY OPERATED EQUIPMENT MAY DIFFER FROM THOSE INDICATED ON DRAWINGS. CONTRACTOR SHALL CONFIRM RATINGS PRIOR TO ORDERING EQUIPMENT.
5. THE COMPLETE ELECTRICAL INSTALLATION SHALL BE IN ACCORDANCE WITH THE LATEST EDITION OF THE CALIFORNIA ELECTRICAL CODE (CEC) AND PROJECT SPECIFICATIONS.
6. LABEL EACH RECEPTACLE OR ELECTRICAL EQUIPMENT WITH PANEL AND CIRCUIT NUMBER SIMILAR TO OTHERS IN THE AREA.
7. UPDATE (E) PANEL DIRECTORIES WHEREVER CIRCUIT CHANGES ARE MADE.
8. SEE MECHANICAL DRAWINGS FOR EXACT LOCATION AND SCHEDULE OF MECHANICAL EQUIPMENT.
9. CONTRACTOR SHALL PROVIDE AND ROUTE NEW CONTROL CONDUIT FROM THE NEW LOCAL NOX REDUCTION SYSTEM CONTROLLER TO THE REMOTE CONTROL PANEL LOCATED IN N234A. NEW CONDUIT CAN BE ROUTED OVERHEAD ON THE EXISTING STRUCTURE SUBJECTED TO NASA'S APPROVAL.
10. CONTRACTOR SHALL ROUTE AND SUPPORT NEW 3/4" CONDUIT FROM COOLING TOWER TO BUILDING N231 ABOVE EXISTING ROAD, AT MINIMUM 16 FEET CLEAR HEIGHT. CONDUIT CANNOT BE ROUTED UNDERGROUND DUE TO INTERFERENCE OF EXISTING UNDERGROUND ELECTRICAL DUCT BANK.
11. ELECTRICAL WORK RELATED TO THE COOLING TOWER, HEAT EXCHANGER AND COOLING TOWER PUMP MAY BE ELIMINATED IF IT IS NOT REQUIRED FOR THE NOX EMISSION REDUCTION SYSTEM

KEY NOTES

1. CONDUIT ROUTING SHOWN DIAGRAMMATICAL. VERIFY EXACT CONDUIT ROUTING IN FIELD. REFER TO FEEDER SCHEDULE ON SHEETS E4 & E6 FOR FEEDER SIZES.
2. PROVIDE PULL BOX AS SHOWN ON THE DRAWING SIZED PER CEC.
3. (E) MCC-N231 IS FED FROM MCC-4 LOCATED IN N229A.
4. PROVIDE WALL MOUNTED LIGHTING FIXTURE LITHONIA CAT # TWAC 42TRT-120-CR-PE-LPI OR APPROVED EQUAL. PROVIDE ALL NECESSARY HARDWARE FOR A COMPLETE WORKING SYSTEM.
5. DISCONNECT AND REMOVE (E) 2P 30A CIRCUIT BREAKER # 6. PROVIDE (1)-1P, 30A CIRCUIT BREAKER FOR CHEMICAL SHED LOAD AND (1)-1P, 20A CIRCUIT BREAKER FOR COOLING TOWER RECEPTACLES. LABEL CIRCUIT BREAKERS AS '#6A CHEMICAL SHED' AND '#6B COOLING TOWER RECEPTACLES'.
6. DISCONNECT AND REMOVE (E) 3P 30A CIRCUIT BREAKER # 22. PROVIDE 1P, 20A CIRCUIT BREAKER FOR COOLING TOWER FLOOD LIGHTS. LABEL CIRCUIT BREAKER AS 'COOLING TOWER FLOOD LIGHTS'.
7. PROVIDE NEW PLATFORM LIGHTING FIXTURE WITH APPROPRIATE MOUNTING POLE. CONTRACTOR TO PROVIDE ALL NECESSARY HARDWARE FOR A COMPLETE WORKING SYSTEM. LITHONIA CAT # TWAC 42TRT-120-CR-PE-LPI OR APPROVED EQUAL.
8. PROVIDE 5-20R WEATHERPROOF NEMA 3R RECEPTACLE WITH 'IN-USE' COVER. LOCATE RECEPTACLE WITHIN 25' OF THE EQUIPMENT.
9. PROVIDE VFD IN ACCORDANCE WITH SPECIFICATION SECTION 26 29 23. SEE DRAWING E6 FOR CONDUIT AND WIRE SIZE.
10. DOLPHIN G3080-PVC ASSEMBLY. SEE MECHANICAL DRAWINGS FOR DETAILS. SEE DRAWING E6 FOR CONDUIT AND WIRE SIZE.
11. TERMINATE AND LABEL WIRES FOR CP-1 INSIDE PULL BOX FOR FUTURE CONNECTION.
12. TERMINATE AND LABEL ALL WIRES FOR CHEMICAL SHED, PUMPS CP-2, CP-3, CP-4 AND DRAFT FAN DF-1 INSIDE THE PULL BOX FOR FUTURE CONNECTION.
13. (E) PULL BOX TO BE DEMOLISHED.
14. (E) ELECTRICAL CONDUIT SHALL BE PARTIALLY DEMOLISHED. SEE DRAWING D3 FOR DETAILS.
15. CONTRACTOR SHALL TAKE EXTREME CARE AND NECESSARY SAFETY PRECAUTIONS WHILE WORKING IN THIS AREA. (E) DUCT BANK WITH 2.4kV CABLES LOCATED BELOW THE GROUND.

Approved for Construction
Moffett Field Permit Board

Chief Building Official
Permit No. 11P002

REGISTERED PROFESSIONAL ENGINEER FREDERICK M. JONES No. E14016 ELECTRICAL STATE OF CALIFORNIA

3.14.12 for

ZONE	LETTER	DESCRIPTION	DRAWN	DATE	APPRVD
		REVISIONS			

		DATE
DRAWN	N. NIZAMOVA	3-13-12
DESIGNED	N. NIZAMOVA	3-13-12
CHECKED	J. McCUSKER	3/14/12
PROJMGR	P.WAN	3/13/12
REQUESTER	R.OLIVARES	3/13/12
R&QA		DATE
SAFETY		DATE
SUPERVISOR	S.FRANKEL	DATE
		DATE

Ames Research Center
Moffett Field, California

STEAM VACUUM SYSTEM NOx EMISSION REDUCTION SYSTEM
GENERAL

ELECTRICAL SITE PLAN EXISTING/DEMO AND NEW WORK

SIZE	CAGE CODE	REV
D	25307	A
SCALE	NONE	INDEX SHEET OF

A334A-1000-E2

FILE NAME: A334A-1000-E2_1 03-12-2012

60220641

DWG: R:\234\60220641.0001 (K11035) NOx Scrubber Engrg Support\500_CAD.Rev3\E\Sheet\A334A----1000-E02_1.dwg Version: 18.1s (LMS Tech) User: jjho
DATE: Mar 12, 2012 - 1:57:01 pm

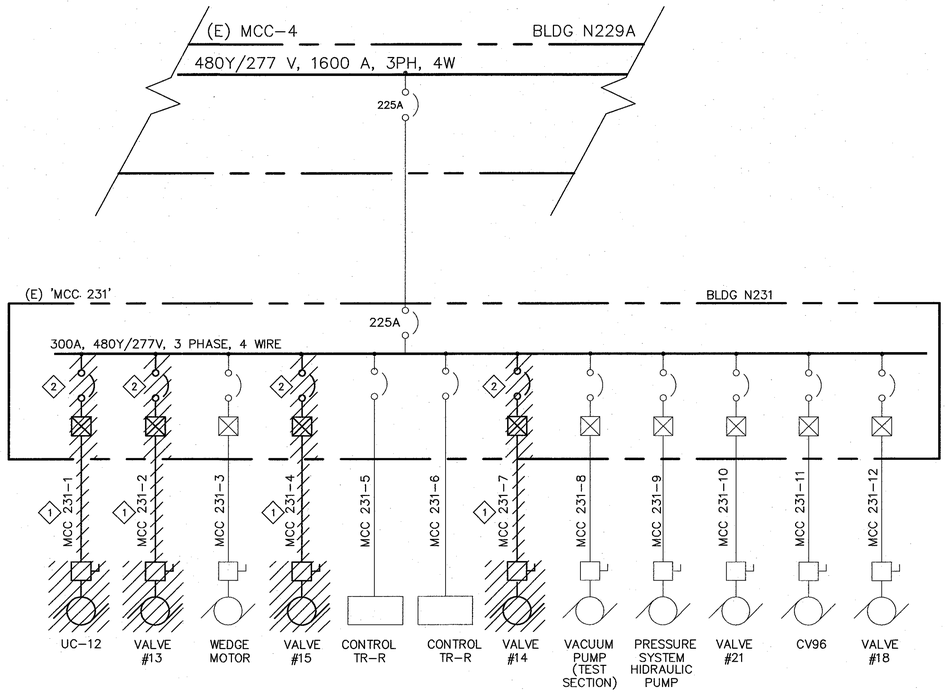

1 'MCC 231' SINGLE LINE DIAGRAM-EXISTING/DEMOLITION
SCALE: N.T.S.

FEEDER NUMBER	EQUIPMENT ID	MOTOR HP	CIRCUIT BREAKER	STARTER SIZE	CONDUIT SIZE	CONDUCTOR # & SIZE	DISCONNECT AT MOTOR	CONTROLS AT MCC 231	CONTROL AT MOTOR	POINT OF CONNECTION
MCC 231-1	UC-12							H-O-A & PILOT LIGHT		
MCC 231-2	VALVE #13							H-O-A & PILOT LIGHT		
MCC 231-3	WEDGE MOTOR							H-O-A & PILOT LIGHT		
MCC 231-4	VALVE #15							H-O-A & PILOT LIGHT		
MCC 231-5	CONTROL TR-R							H-O-A & PILOT LIGHT		
MCC 231-6	CONTROL TR-R							H-O-A & PILOT LIGHT		
MCC 231-7	VALVE #14							H-O-A & PILOT LIGHT		
MCC 231-8	VACUUM PUMP (TEST SECTION)							H-O-A & PILOT LIGHT		
MCC 231-9	PRESSURE SYSTEM HIDRAULIC PUMP							H-O-A & PILOT LIGHT		
MCC 231-10	VALVE #21							H-O-A & PILOT LIGHT		
MCC 231-11	CV96							H-O-A & PILOT LIGHT		
MCC 231-12	VALVE #18									

2 'MCC 231' FEEDER SCHEDULE-EXISTING/DEMOLITION
SCALE: N.T.S.

SHEET NOTES

1. SEE DRAWING E1 FOR GENERAL ELECTRICAL NOTES, SYMBOLS AND ABBREVIATIONS.
2. LIGHT LINES INDICATE EXISTING ELECTRICAL CONDITIONS AND BACKGROUND WORK BY OTHER DISCIPLINES, DARK LINES INDICATE NEW ELECTRICAL WORK, UON.
3. HATCH LINES INDICATE (E) ELECTRICAL ITEMS TO BE DISCONNECTED AND REMOVED, U.O.N.
4. REFER TO MECHANICAL DRAWINGS FOR ACTUAL LOCATION, RATING AND SCHEDULE OF MECHANICAL EQUIPMENT.

KEY NOTES

1. DISCONNECT AND REMOVE (E) POWER AND CONTROL CIRCUITS CONDUIT/WIRING FROM (E) EQUIPMENT, CONNECTED TO THE SOURCE 'MCC 231'.
2. REMOVE (E) CIRCUIT BREAKERS & STARTERS AS SHOWN.

Approved for Construction
Moffett Field Permit Board

Chief Building Official
Permit No. 11P002

ZONE	LETTER	DESCRIPTION	DRAWN	DATE	APPRVD

REVISIONS

DRAWN N. NIZAMOVA		DATE 3-13-12
DESIGNED N. NIZAMOVA		DATE 3-13-12
CHECKED J.McCUSKER		DATE 3.14.12
PROJMGR P.WAN		DATE 3/13/12
REQUESTER R.OLIVARES		DATE 3/15/12
R&QA		DATE
SAFETY		DATE
SUPERVISOR S.FRANKEL		DATE

REGISTERED PROFESSIONAL ENGINEER FREDERICK M. JONES No. E14088 ELECTRICAL STATE OF CALIFORNIA
for 3.14.12

Ames Research Center
Moffett Field, California

STEAM VACUUM SYSTEM NOx EMISSION REDUCTION SYSTEM
ELECTRICAL

'MCC 231' SINGLE LINE DIAGRAM EXISTING/DEMOLITION

SIZE	CAGE CODE	REV
D	25307	A
SCALE AS NOTED	INDEX	SHEET OF

FILE NAME: A334A-1000-E3 03-12-2012

60220641

DWG: R:\234A\60220641.0001 (K11035) NOx Scrubber Engrg Support\500_CAD.Rev3\E:\Sheet\A334A---1000-E03.dwg Version: 18.1s (LMS Tech) User: jjho
DATE: Mar 12, 2012 - 2:29:50 pm

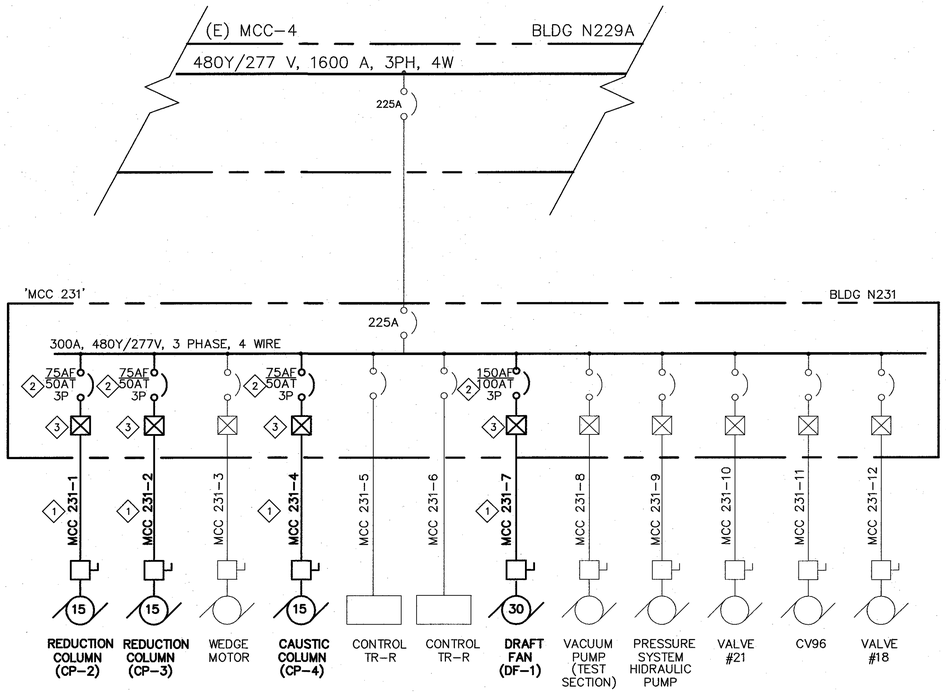

1 'MCC 231' SINGLE LINE DIAGRAM-NEW WORK
SCALE: N.T.S.

FEEDER NUMBER	EQUIPMENT ID	MOTOR HP	CIRCUIT BREAKER	STARTER SIZE	CONDUIT SIZE	CONDUCTOR # & SIZE	DISCONNECT AT MOTOR	CONTROLS AT MCC 231	CONTROL AT MOTOR	POINT OF CONNECTION
MCC 231-1	**REDUCTION COLUMN(CP-2)**	**15 HP**	**50A, 3P**	**2**	**3/4"**	**3 # 10 & 1 # 10 G**	**30A, 3P**	**H-O-A & PILOT LIGHT**	**DISCONNECT SWITCH**	**DISCONNECT SWITCH**
MCC 231-2	**REDUCTION COLUMN(CP-3)**	**15 HP**	**50A, 3P**	**2**	**3/4"**	**3 # 10 & 1 # 10 G**	**30A, 3P**	**H-O-A & PILOT LIGHT**	**DISCONNECT SWITCH**	**DISCONNECT SWITCH**
MCC 231-3	WEDGE MOTOR							H-O-A & PILOT LIGHT		
MCC 231-4	**CAUSTIC COLUMN(CP-4)**	**15 HP**	**50A, 3P**	**2**	**3/4"**	**3 # 10 & 1 # 10 G**	**30A, 3P**	**H-O-A & PILOT LIGHT**	**DISCONNECT SWITCH**	**DISCONNECT SWITCH**
MCC 231-5	CONTROL TR-R							H-O-A & PILOT LIGHT		
MCC 231-6	CONTROL TR-R							H-O-A & PILOT LIGHT		
MCC 231-7	**DRAFT FAN (DF-1)**	**30 HP**	**100A, 3P**	**3**	**3/4"**	**3 # 6 & 1 # 8 G**	**60A, 3P**	**H-O-A & PILOT LIGHT**	**DISCONNECT SWITCH**	**DISCONNECT SWITCH**
MCC 231-8	VACUUM PUMP (TEST SECTION)							H-O-A & PILOT LIGHT		
MCC 231-9	PRESSURE SYSTEM HIDRAULIC PUMP							H-O-A & PILOT LIGHT		
MCC 231-10	VALVE #21							H-O-A & PILOT LIGHT		
MCC 231-11	CV96							H-O-A & PILOT LIGHT		
MCC 231-12	VALVE #18							H-O-A & PILOT LIGHT		

2 'MCC 231' FEEDER SCHEDULE-NEW WORK
SCALE: N.T.S.

SHEET NOTES

1. SEE DRAWING E1 FOR GENERAL ELECTRICAL NOTES, SYMBOLS AND ABBREVIATIONS.
2. LIGHT LINES INDICATE EXISTING ELECTRICAL CONDITIONS AND BACKGROUND WORK BY OTHER DISCIPLINES, DARK LINES INDICATE NEW ELECTRICAL WORK, UON.
3. REFER TO MECHANICAL DRAWINGS FOR ACTUAL LOCATION, RATING AND SCHEDULE OF MECHANICAL EQUIPMENT.
4. CIRCUIT CONNECTIONS TO MOTORS SHALL BE IN LIQUIDTIGHT FLEXIBLE METAL CONDUIT, UON.
5. ELECTRICAL WORK RELATED TO THE COOLING TOWER, HEAT EXCHANGER AND COOLING TOWER PUMP MAY BE ELIMINATED IF IT IS NOT REQUIRED FOR THE NOX EMISSION REDUCTION SYSTEM.

KEY NOTES

1. PROVIDE (N) POWER AND CONTROL CIRCUITS CONDUIT/WIRING FROM (N) EQUIPMENT AS SHOWN ON E2 UP TO THE SOURCE 'MCC 231'. SEE FEEDER SCHEDULE ON THIS DRAWING FOR FEEDER SIZE.
2. PROVIDE (N) CIRCUIT BREAKERS, RATED AS SHOWN ON THIS DRAWING TO MATCH EXISTING KAIC RATING AND MANUFACTURER'S TYPE FOR (N) EQUIPMENT.
3. PROVIDE STARTERS FOR NEW EQUIPMENT, SIZE AS INDICATED ON THE SCHEDULE.

Approved for Construction
Moffett Field Permit Board
Chief Building Official
Permit No. 11P002

ZONE	LETTER	DESCRIPTION	DRAWN	DATE	APPRVD

REVISIONS

DRAWN N. NIZAMOVA	DATE 3-13-12	Ames Research Center, Moffett Field, California
DESIGNED N. NIZAMOVA	DATE 3-13-12	
CHECKED J.McCUSKER	DATE 3.14.12	STEAM VACUUM SYSTEM NOx EMISSION REDUCTION SYSTEM
PROJMGR P.WAN	DATE 3/13/12	ELECTRICAL
REQUESTER R.OLIVARES	DATE 3/13/12	'MCC 231' SINGLE LINE DIAGRAM NEW WORK
R&QA	DATE	
SAFETY	DATE	
SUPERVISOR S.FRANKEL	DATE 3-15-12	SIZE D; CAGE CODE 25307; A 334A-1000-E4 REV
	DATE	SCALE AS NOTED; INDEX; SHEET OF

REGISTERED PROFESSIONAL ENGINEER FREDERICK M. JONES No. E14099 ELECTRICAL STATE OF CALIFORNIA
3.14.12

FILE NAME: A334A-1000-E4_1 03-12-2012

60220641

DWG: R:\2344\60220641.0001 (K11035) NOx Scrubber Engrg Support\500_CAD.Rev3\E\Sheet\A334A---1000-E04_1.dwg Version: 18.1s (LMS Tech) User: jjho
DATE: Mar 12, 2012 - 2:08:16 pm

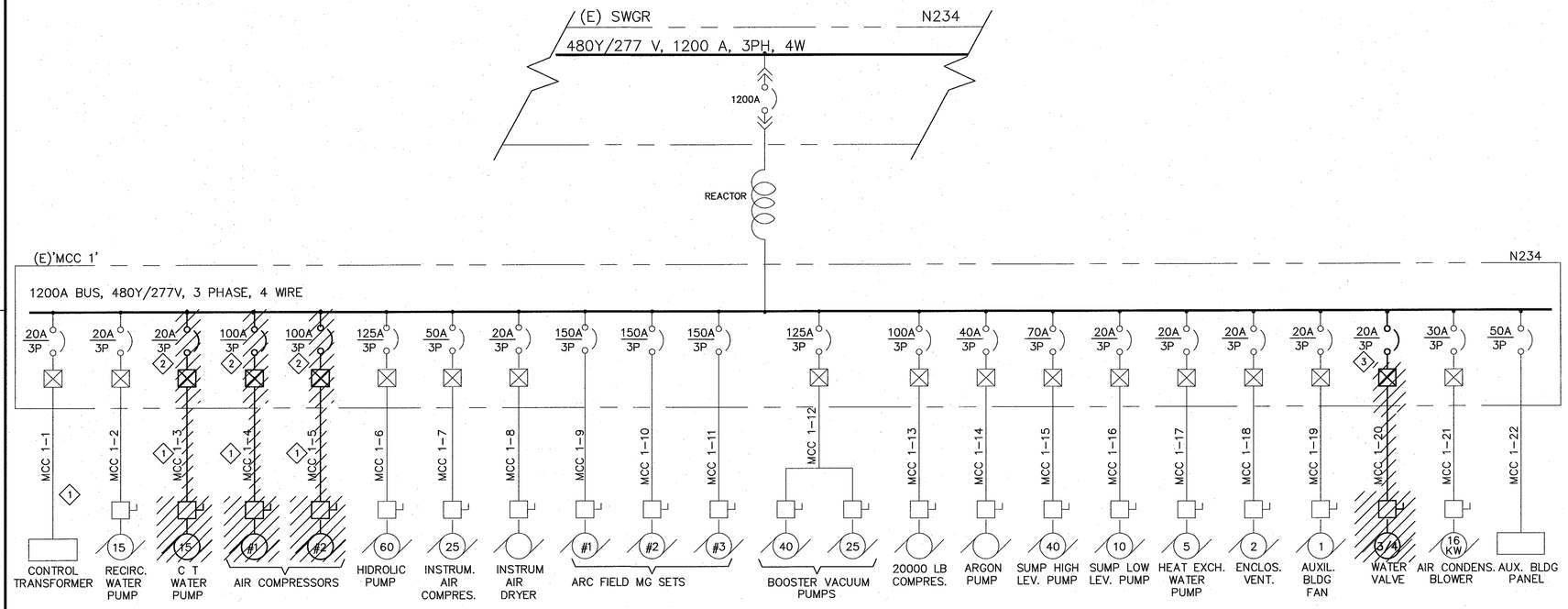

1 'MCC 1' SINGLE LINE DIAGRAM–EXISTING/DEMOLITION
SCALE: N.T.S.

FEEDER NUMBER	EQUIPMENT ID	MOTOR HP	CIRCUIT BREAKER	STARTER SIZE	CONDUIT SIZE	CONDUCTOR # & SIZE	DISCONNECT AT MOTOR	CONTROLS AT MCC 1	CONTROL AT MOTOR	POINT OF CONNECTION
MCC 1–1	CONTROL TRANSFORMER		20A, 3P					H–O–A & PILOT LIGHT		
MCC 1–2	RECIRC. WATER PUMP	15	20A, 3P					H–O–A & PILOT LIGHT	DISCONNECT SWITCH	DISCONNECT SWITCH
MCC 1–3	C T WATER PUMP	15	20A, 3P					H–O–A & PILOT LIGHT	DISCONNECT SWITCH	DISCONNECT SWITCH
MCC 1–4	AIR COMPRESSOR		100A, 3P					H–O–A & PILOT LIGHT	DISCONNECT SWITCH	DISCONNECT SWITCH
MCC 1–5	AIR COMPRESSOR		100A, 3P					H–O–A & PILOT LIGHT	DISCONNECT SWITCH	DISCONNECT SWITCH
MCC 1–6	HIDROLIC PUMP	60	125A, 3P					H–O–A & PILOT LIGHT	DISCONNECT SWITCH	DISCONNECT SWITCH
MCC 1–7	INSTRUM. AIR COMPRESSOR	25	50A, 3P					H–O–A & PILOT LIGHT	DISCONNECT SWITCH	DISCONNECT SWITCH
MCC 1–8	INSTRUM. AIR DRYER		20A, 3P					H–O–A & PILOT LIGHT	DISCONNECT SWITCH	DISCONNECT SWITCH
MCC 1–9	ARC FIELD MG SET		150A, 3P					H–O–A & PILOT LIGHT	DISCONNECT SWITCH	DISCONNECT SWITCH
MCC 1–10	ARC FIELD MG SET		150A, 3P					H–O–A & PILOT LIGHT	DISCONNECT SWITCH	DISCONNECT SWITCH
MCC 1–11	ARC FIELD MG SET		150A, 3P					H–O–A & PILOT LIGHT	DISCONNECT SWITCH	DISCONNECT SWITCH

FEEDER NUMBER	EQUIPMENT ID	MOTOR HP	CIRCUIT BREAKER	STARTER SIZE	CONDUIT SIZE	CONDUCTOR # & SIZE	DISCONNECT AT MOTOR	CONTROLS AT MCC 1	CONTROL AT MOTOR	POINT OF CONNECTION
MCC 1–12	BOOSTER VAC. PUMPS	40 25	125A, 3P					H–O–A & PILOT LIGHT	DISCONNECT SWITCH	DISCONNECT SWITCH
MCC 1–13	20000 LB COMPRESSOR		100A, 3P					H–O–A & PILOT LIGHT	DISCONNECT SWITCH	DISCONNECT SWITCH
MCC 1–14	ARGON PUMP		40A, 3P					H–O–A & PILOT LIGHT	DISCONNECT SWITCH	DISCONNECT SWITCH
MCC 1–15	SUMP HIGH LEVEL PUMP	40	70A, 3P					H–O–A & PILOT LIGHT	DISCONNECT SWITCH	DISCONNECT SWITCH
MCC 1–16	SUMP LOW LEVEL PUMP	10	20A, 3P					H–O–A & PILOT LIGHT	DISCONNECT SWITCH	DISCONNECT SWITCH
MCC 1–17	HEAT EXCH. WATER PUMP	5	20A, 3P					H–O–A & PILOT LIGHT	DISCONNECT SWITCH	DISCONNECT SWITCH
MCC 1–18	ENCLOSURE VENT.	2	20A, 3P					H–O–A & PILOT LIGHT	DISCONNECT SWITCH	DISCONNECT SWITCH
MCC 1–19	AUXILL. BLDG FAN	1	20A, 3P					H–O–A & PILOT LIGHT	DISCONNECT SWITCH	DISCONNECT SWITCH
MCC 1–20	WATER VALVE	3/4	20A, 3P					H–O–A & PILOT LIGHT	DISCONNECT SWITCH	DISCONNECT SWITCH
MCC 1–21	AIR CONDENS BLOWER	16 kW	30A, 3P					H–O–A & PILOT LIGHT	DISCONNECT SWITCH	DISCONNECT SWITCH
MCC 1–22	AUX. BLDG PANEL		50A, 3P					H–O–A & PILOT LIGHT	PANEL	PANEL

2 'MCC 1' FEEDER SCHEDULE–EXISTING/DEMOLITION
SCALE: N.T.S.

SHEET NOTES

1. SEE DRAWING E1 FOR GENERAL ELECTRICAL NOTES, SYMBOLS AND ABBREVIATIONS.
2. SEE DRAWING E2 FOR LAYOUT.
3. LIGHT LINES INDICATE EXISTING ELECTRICAL CONDITIONS AND BACKGROUND WORK BY OTHER DISCIPLINES, DARK LINES INDICATE NEW ELECTRICAL WORK, UON.
4. HATCH LINES INDICATE (E) ELECTRICAL ITEMS TO BE DISCONNECTED AND REMOVED, U.O.N.
5. REFER TO MECHANICAL DRAWINGS FOR ACTUAL LOCATION, RATING AND SCHEDULE OF MECHANICAL EQUIPMENT.

KEY NOTES

1. DISCONNECT AND REMOVE (E) POWER AND CONTROL CIRCUITS CONDUIT/WIRING FROM (E) EQUIPMENT, CONNECTED TO THE SOURCE 'MCC–1'.
2. REMOVE (E) CIRCUIT BREAKERS & STARTERS AS SHOWN.
3. DISCONNECT (E) STARTER AND TOL's, TAPE AND SECURE WIRES FOR FUTURE CONNECTION OF NEW EQUIPMENT.

Approved for Construction
Moffett Field Permit Board
Chief Building Official
Permit No. 11P002

ZONE	LETTER	DESCRIPTION	DRAWN	DATE	APPRVD
		REVISIONS			

DRAWN N. NIZAMOVA	DATE 3-13-12	Ames Research Center, Moffett Field, California
DESIGNED N. NIZAMOVA	DATE 3-13-12	
CHECKED J.McCUSKER	DATE 3/14/12	STEAM VACUUM SYSTEM NOx EMISSION REDUCTION SYSTEM
PROJMGR P.WAN	DATE 3/13/12	ELECTRICAL
REQUESTER R.OLIVARES	DATE 3/13/12	'MCC 1' SINGLE LINE DIAGRAM EXISTING/DEMOLITION
R&QA	DATE	
SAFETY	DATE	SIZE D · CAGE CODE 25307 · A 334A-1000-E5 · REV
SUPERVISOR S.FRANKEL	DATE 3-15-12	SCALE AS NOTED · INDEX · SHEET OF
	DATE	

FILE NAME: A334A-1000-E5 03-12-2012

60220641

DWG: R:\334A\60220641.0001 (K11.035) NOx Scrubber Engrg Support\500_CAD.Rev3\E\Sheet\A334A-----1000-E05.dwg Version: 18.1s (LMS Tech) User: jjho
DATE: Mar 12, 2012 - 2:29:51 pm

DWG NO. A334A-1000-E6 | SH. | REV

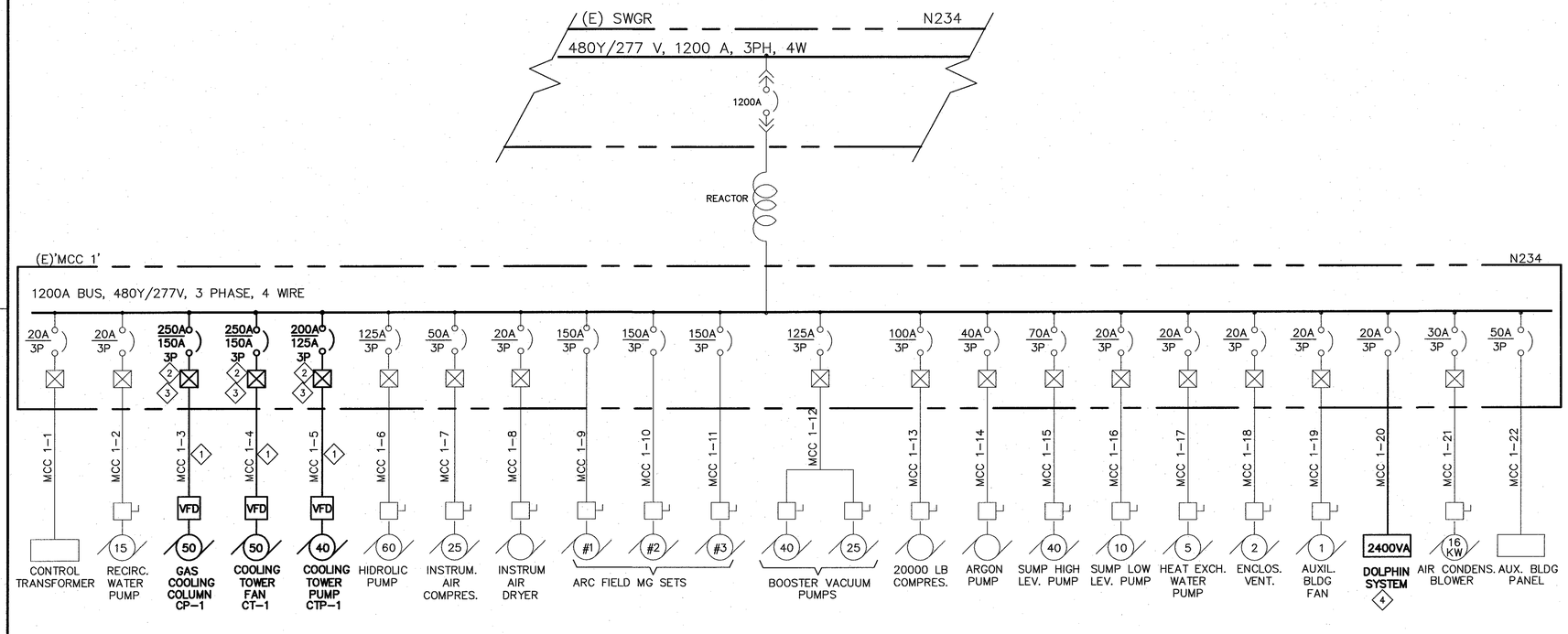

1 'MCC 1' SINGLE LINE DIAGRAM–NEW WORK
SCALE: N.T.S.

FEEDER NUMBER	EQUIPMENT ID	MOTOR HP	CIRCUIT BREAKER	STARTER SIZE	CONDUIT SIZE	CONDUCTOR # & SIZE	DISCONNECT AT MOTOR	CONTROLS AT MCC 1	CONTROL AT MOTOR	POINT OF CONNECTION
MCC 1–1	CONTROL TRANSFORMER		20A, 3P					H–O–A & PILOT LIGHT		
MCC 1–2	RECIRC. WATER PUMP	15	20A, 3P					H–O–A & PILOT LIGHT	DISCONNECT SWITCH	DISCONNECT SWITCH
MCC 1–3	**COOLING COLUMN(CP–1)**	**50 HP**	**150A, 3P**	**3**	**1"**	**3 # 4 & 1 # 6 G**	**100A, 3P**	**H–O–A & PILOT LIGHT**	**VFD**	**VFD**
MCC 1–4	**COOLING TWR FAN(CT–1)**	**50 HP**	**150A, 3P**	**3**	**1"**	**3 # 4 & 1 # 6 G**	**100A, 3P**	**H–O–A & PILOT LIGHT**	**VFD**	**VFD**
MCC 1–5	**COOLING TWR PUMP(CTP–1)**	**40 HP**	**125A, 3P**	**3**	**1"**	**3 # 6 & 1 # 6 G**	**60A, 3P**	**H–O–A & PILOT LIGHT**	**VFD**	**VFD**
MCC 1–6	HIDROLIC PUMP	60	125A, 3P					H–O–A & PILOT LIGHT	DISCONNECT SWITCH	DISCONNECT SWITCH
MCC 1–7	INSTRUM. AIR COMPRESSOR	25	50A, 3P					H–O–A & PILOT LIGHT	DISCONNECT SWITCH	DISCONNECT SWITCH
MCC 1–8	INSTRUM. AIR DRYER		20A, 3P					H–O–A & PILOT LIGHT	DISCONNECT SWITCH	DISCONNECT SWITCH
MCC 1–9	ARC FIELD MG SET		150A, 3P					H–O–A & PILOT LIGHT	DISCONNECT SWITCH	DISCONNECT SWITCH
MCC 1–10	ARC FIELD MG SET		150A, 3P					H–O–A & PILOT LIGHT	DISCONNECT SWITCH	DISCONNECT SWITCH
MCC 1–11	ARC FIELD MG SET		150A, 3P					H–O–A & PILOT LIGHT	DISCONNECT SWITCH	DISCONNECT SWITCH

FEEDER NUMBER	EQUIPMENT ID	MOTOR HP	CIRCUIT BREAKER	STARTER SIZE	CONDUIT SIZE	CONDUCTOR # & SIZE	DISCONNECT AT MOTOR	CONTROLS AT MCC 1	CONTROL AT MOTOR	POINT OF CONNECTION
MCC 1–12	BOOSTER VAC. PUMPS	40 25	125A, 3P					H–O–A & PILOT LIGHT	DISCONNECT SWITCH	DISCONNECT SWITCH
MCC 1–13	20000 LB COMPRESSOR		100A, 3P					H–O–A & PILOT LIGHT	DISCONNECT SWITCH	DISCONNECT SWITCH
MCC 1–14	ARGON PUMP		40A, 3P					H–O–A & PILOT LIGHT	DISCONNECT SWITCH	DISCONNECT SWITCH
MCC 1–15	SUMP HIGH LEVEL PUMP	40	70A, 3P					H–O–A & PILOT LIGHT	DISCONNECT SWITCH	DISCONNECT SWITCH
MCC 1–16	SUMP LOW LEVEL PUMP	10	20A, 3P					H–O–A & PILOT LIGHT	DISCONNECT SWITCH	DISCONNECT SWITCH
MCC 1–17	HEAT EXCH. WATER PUMP	5	20A, 3P					H–O–A & PILOT LIGHT	DISCONNECT SWITCH	DISCONNECT SWITCH
MCC 1–18	ENCLOSURE VENT.	2	20A, 3P					H–O–A & PILOT LIGHT	DISCONNECT SWITCH	DISCONNECT SWITCH
MCC 1–19	AUXILL. BLDG FAN	1	20A, 3P					H–O–A & PILOT LIGHT	DISCONNECT SWITCH	DISCONNECT SWITCH
MCC 1–20	**DOLPHIN SYSTEM**	**3/4**	20A, 3P		**3/4"**	**2 # 12 & 1 # 12 G**	**30A, 3P**	**H–O–A & PILOT LIGHT**	**DISCONNECT SWITCH**	**DISCONNECT SWITCH**
MCC 1–21	AIR CONDENS BLOWER	16 kW	30A, 3P					H–O–A & PILOT LIGHT	DISCONNECT SWITCH	DISCONNECT SWITCH
MCC 1–22	AUX. BLDG PANEL		50A, 3P					H–O–A & PILOT LIGHT	PANEL	PANEL

2 'MCC 1' FEEDER SCHEDULE–NEW WORK
SCALE: N.T.S.

SHEET NOTES

1. SEE DRAWING E1 FOR GENERAL ELECTRICAL NOTES, SYMBOLS AND ABBREVIATIONS.
2. LIGHT LINES INDICATE EXISTING ELECTRICAL CONDITIONS AND BACKGROUND WORK BY OTHER DISCIPLINES, DARK LINES INDICATE NEW ELECTRICAL WORK, UON.
3. REFER TO MECHANICAL DRAWINGS FOR ACTUAL LOCATION, RATING AND SCHEDULE OF MECHANICAL EQUIPMENT.
4. CIRCUIT CONNECTIONS TO MOTORS SHALL BE IN LIQUIDTIGHT FLEXIBLE METAL CONDUIT, UON.
5. ELECTRICAL WORK RELATED TO THE COOLING TOWER, HEAT EXCHANGER AND COOLING TOWER PUMP MAY BE ELIMINATED IF IT IS NOT REQUIRED FOR THE NOX EMISSION REDUCTION SYSTEM.

KEY NOTES

1. PROVIDE (N) POWER AND CONTROL CIRCUITS CONDUIT/WIRING FROM (N) EQUIPMENT AS SHOWN ON E2 UP TO THE SOURCE 'MCC 1'. SEE FEEDER SCHEDULE ON THIS DRAWING FOR FEEDER SIZE.
2. PROVIDE (N) CIRCUIT BREAKERS, RATED AS SHOWN ON THIS DRAWING TO MATCH EXISTING KAIC RATING AND MANUFACTURER'S TYPE FOR (N) EQUIPMENT.
3. PROVIDE STARTERS FOR NEW EQUIPMENT, SIZE AS INDICATED ON THE SCHEDULE.
4. 480V, 1–PHASE LOAD.

Approved for Construction
Moffett Field Permit Board
Chief Building Official
Permit No. 11P002

ZONE	LETTER	DESCRIPTION	DRAWN	DATE	APPRVD
		REVISIONS			

DRAWN N. NIZAMOVA	DATE 3-13-12	
DESIGNED N. NIZAMOVA	DATE 3-13-12	
CHECKED J.McCUSKER	DATE 3/13/12	
PROJMGR P.WAN	DATE 3/13/12	
REQUESTER R.OLIVARES	DATE 3.13.12	
R&QA	DATE	
SAFETY	DATE	
SUPERVISOR S.FRANKEL	DATE 3.15.12	
	DATE	

Ames Research Center
Moffett Field, California

STEAM VACUUM SYSTEM NOx EMISSION REDUCTION SYSTEM
ELECTRICAL

'MCC–1' SINGLE LINE DIAGRAM NEW WORK

SIZE D | CAGE CODE 25307 | REV A | 334A–1000–E6
SCALE AS NOTED | INDEX | SHEET | OF

FILE NAME: A334A–1000–E6_1 03–12–2012

60220641

REGISTERED PROFESSIONAL ENGINEER FREDERICK M. JONES No. E14016 ELECTRICAL STATE OF CALIFORNIA
3.14.12

DWG: R:\334A\60220641.0001 (K11035) NOx Scrubber Engrg Support\500_CAD\Rev3\E\Sheet\A334A-----1000-E06_1.dwg Version: 18.1s (LMS Tech) User: jjho
DATE: Mar 12, 2012 - 2:08:20 pm

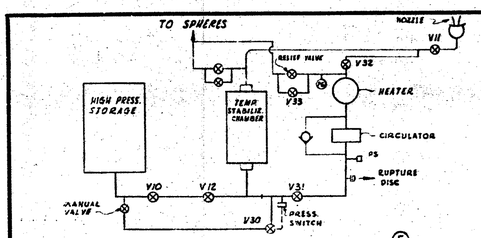

SCHEMATIC- TEMPERATURE STABILIZATION CHAMBER REHEATING SYSTEM

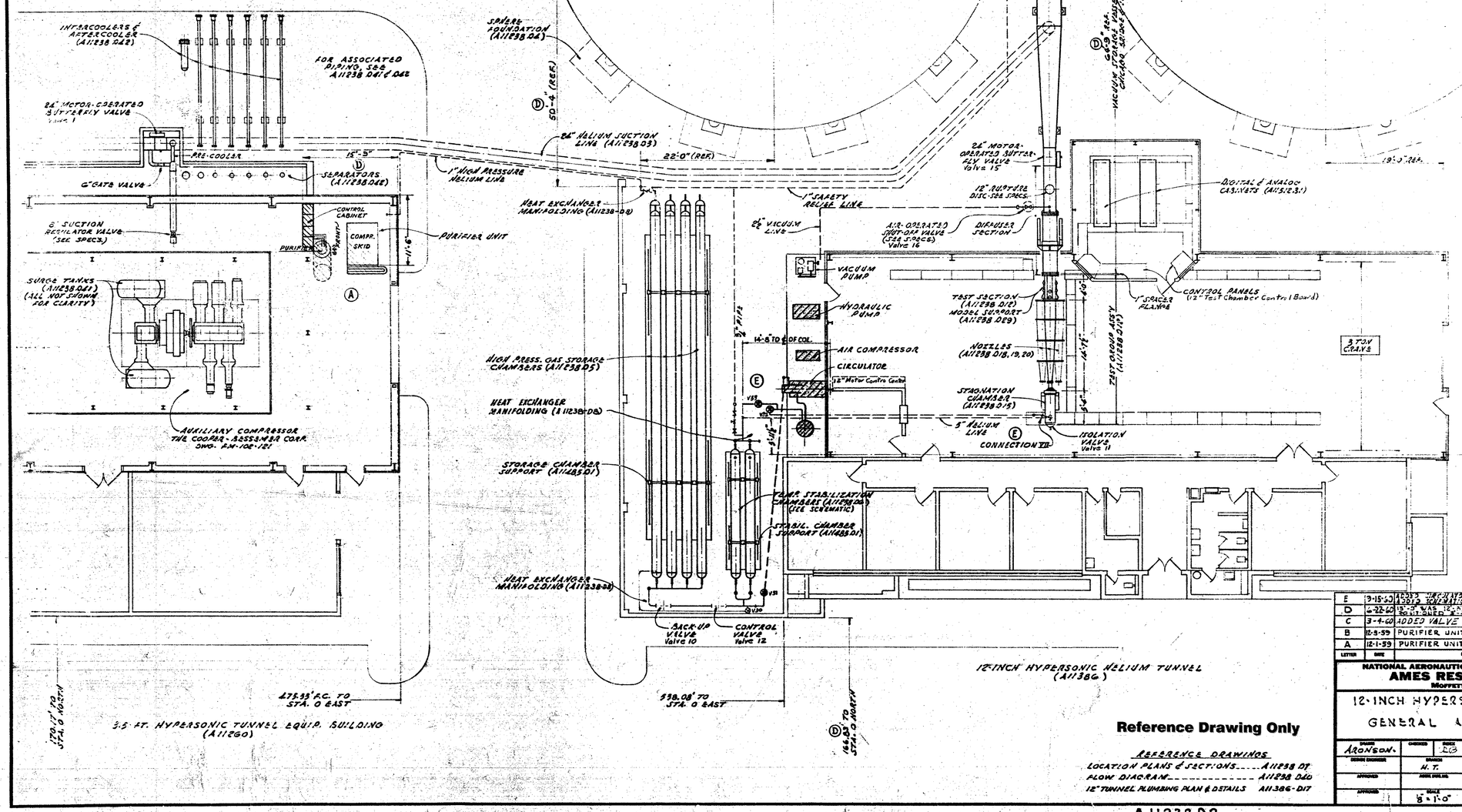

LETTER	DATE	REVISION DESCRIPTION	DRAWN	APP'D
E	3-15-63	ADDED VALVES AND OPERATORS (VIII, 3, AND 4) & SCHEMATICAL LOOP CONNECTION	R.A.S.	
D	2-22-60	12'-0" WIDE 12" I.P.S. PURIFIER RELOCATED; SIZE OF BUILDING, ℄ & ELEVATIONS CHANGED, ℄ N & S ARE SOUTH	D.M.D.	
C	3-4-60	ADDED VALVE NUMBERS	R.A.S.	
B	12-5-59	PURIFIER UNIT REVISED.	R.R.B.	
A	12-1-59	PURIFIER UNIT RELOCATED	R.R.B.	

NATIONAL AERONAUTICS AND SPACE ADMINISTRATION
AMES RESEARCH CENTER
MOFFETT FIELD, CALIFORNIA

12-INCH HYPERSONIC HELIUM TUNNEL
GENERAL ARRANGEMENT

DRAWN	CHECKED	TRACED	MATERIAL	LIMITS UNLESS NOTED
ARONSON		DCB		
DESIGN ENGINEER	BRANCH		J.O. 5691-E	FRAC. ±, DEC. ±, ANG. ±
APPROVED	H. T.			
APPROVED	ASSOC. ENGR.		A11238 D2	SIZE E
	SCALE 8"=1'-0"			

Reference Drawing Only

REFERENCE DRAWINGS
LOCATION PLANS & SECTIONS..... A11238 D1
FLOW DIAGRAM..... A11238 D40
12" TUNNEL PLUMBING PLAN & DETAILS A11386-D17

A11238 D2

2.31-5903 m-0
12" H.H.T. GENR. ARRGMT.

EAST PALO ALTO CALIF. U.S.A. DIETZGEN 5.1.1954

CONTRACT 7-7912

MK	Description
N3	36"ϕ Nozzle
	Code : Sec VIII UG-0
	Cat-ss Loose
	Loc of nozzle : W
	Sim. to Hinge
M1	24"ϕ Manway - Bottom
N1	3" ϕ Flow Drum Valve - Crane "J Globe Valve "J Pattern
N2	4"ϕ Cplg Pressure Gage - Ashcroft - 1379-MG (4½" Recessed Dial)
N4	12"ϕ NOZZLE - BOTTOM
N5	12"ϕ NOZZLE - TOP

Center of Rig 366
℄ 464,782 STA 4

<(1)> FIELD NOTE:
#3R W/ N3 PLACE ON 90°ϕ FOR SPHERE A
#3R W/ N3 PLACE ON 270°ϕ FOR SPHERE B

Reveals N1 & N2
Flow Drum Valve & Pressure Gage

Nozzle to be Centered in Plane

Skirt - 2 pc Assembly with Nozzle N3

Bottom Head & Inside Head

Code: ASME (Modified)
Material:
Shell A285C Fbr Cshear A285C Figs 1841/2852
Rods A7 Bolts 307B
Design Pressure: 20 psig ~ 40 psia
Test Pressure: Hydrostatic - 25 psig ~ 45 psia (by wt)
Stress Relieve: Bottom Head Fittings & 3"ϕ-2"ϕ A307 Gr A Studs
X-Ray: Spot
Radio: Yes
Paint:
Exp: Coat spray - Valspar 301 yellow primer (Sta-pak coat)
Ext: Coat spray - Valspar 300 red primer (outdoor enamel)
Coat spray - Valspar 30 Aspalt Aluminum
Seismic Force: 20%
Hammer Test: NO
Weld: 30 pF
Corrosion None

SPHERE PATENT ISSUED
DESIGNED UNDER ONE OR MORE OF THE FOLLOWING UNITED STATES PATENTS:
2,393,964 2,723,276 2,568,602
2,417,053 2,544,451 2,644,607
2,427,676 2,621,313
OTHER PATENTS PENDING.
ALSO PATENTED IN FOREIGN COUNTRIES.

Reference Drawing Only

3 3 1 5 9 0 3 M 1 1 1

PURCHASER'S ORDER NO.			
REVISIONS			
NO.	DATE	BY	REMARKS
1	12-4-58	APR	<1>

PURCHASER'S REQ'N. NO.

CHICAGO BRIDGE & IRON COMPANY
CHICAGO, ILL. — BIRMINGHAM, ALA.
SALT LAKE CITY, UTAH — GREENVILLE, MISS.

General Plan
2-75'-0" ϕ VACUUM SPHERES
MARSH
Model Fork AZIF

Order No. A.P.O. Item 11-20-58 CONTRACT NO.
Checked by Eric 12-4-58 7-7912
DRAWING 1 OF 1

PLANS MADE AT SALT LAKE CITY

3 3 1 5 9 0 3 M 1 1 1

GENERAL PLAN 2, 75' VACUUM SPHERES

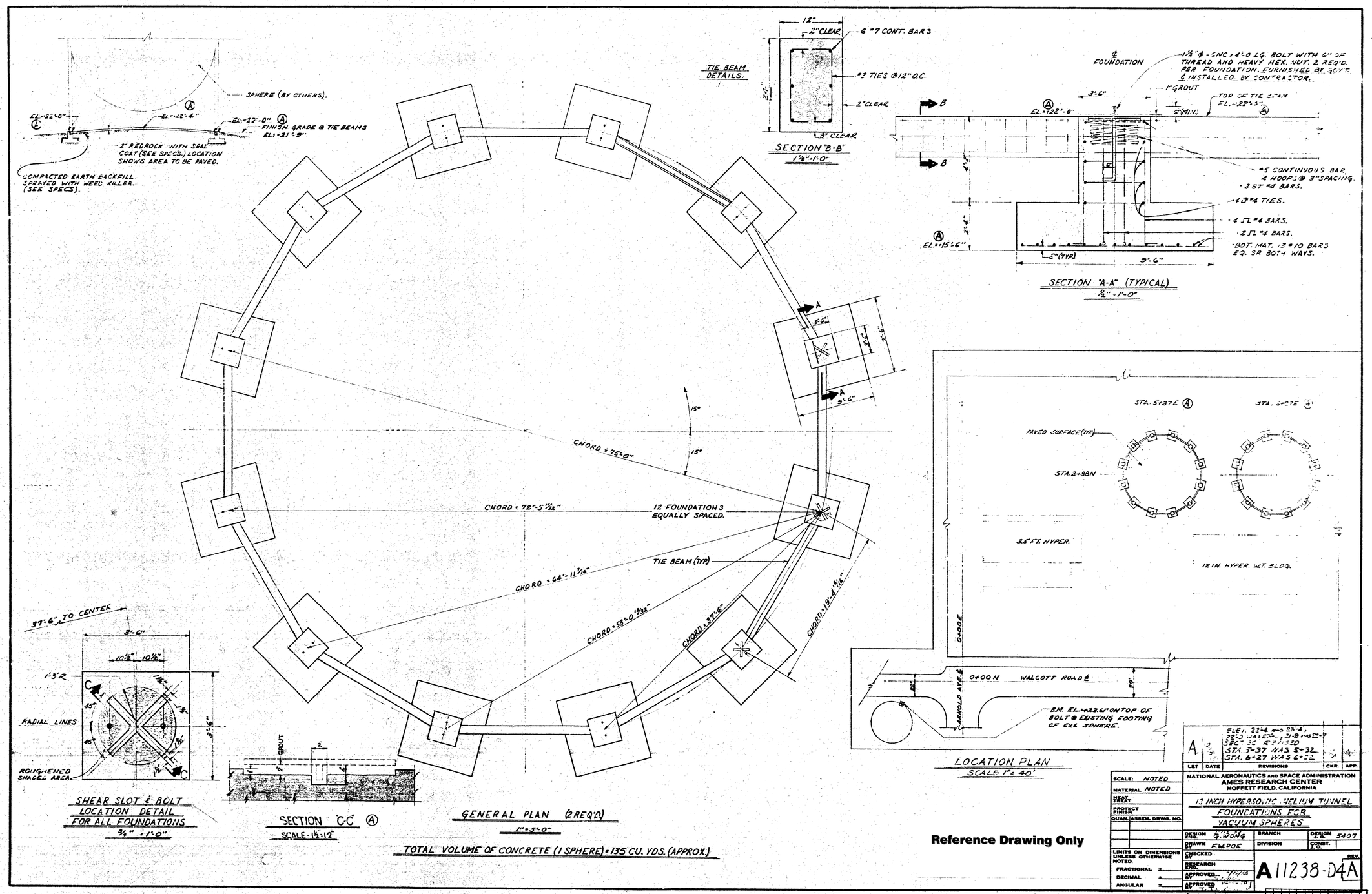

Reference Drawing Only

LET	DATE	REVISIONS	CKR.	APP.
A	2/8/	ELEV. 22'-4 WAS 23'-4", 22'-0 WAS 23'-0", 21'-9 WAS 22'-9" SEC. 36 REVISED STA. 5+37 WAS 5+32 STA. 6+27 WAS 6+22		

SCALE: NOTED
MATERIAL NOTED
HEAT TREAT
PROTECT FINISH
QUAN. ASSEM. DRWG. NO.

LIMITS ON DIMENSIONS UNLESS OTHERWISE NOTED
FRACTIONAL ±
DECIMAL ±
ANGULAR ±

NATIONAL AERONAUTICS AND SPACE ADMINISTRATION
AMES RESEARCH CENTER
MOFFETT FIELD, CALIFORNIA

13 INCH HYPERSONIC HELIUM TUNNEL
FOUNDATIONS FOR VACUUM SPHERES

DESIGN ENG. G. WONG
DRAWN BY F.W. POE
CHECKED BY
RESEARCH ENG.
APPROVED BY
APPROVED BY
BRANCH
DIVISION
DESIGN J.O. 5407
CONST. J.O.
REV.

A11238-D4A

331-5903m-15

331-5903m-15
12" H.H.T. FNDTN. FOR VACUUM SPHERES

CONTRACT 7-7912

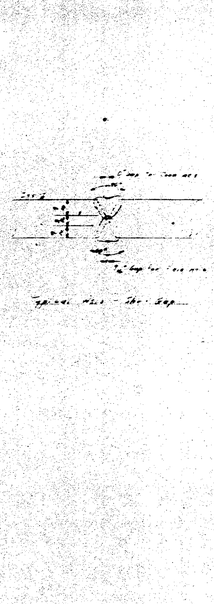

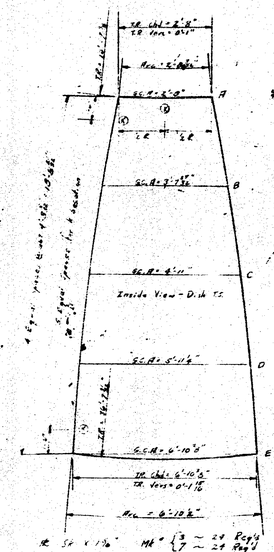

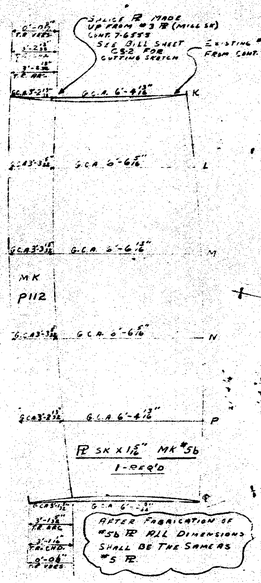

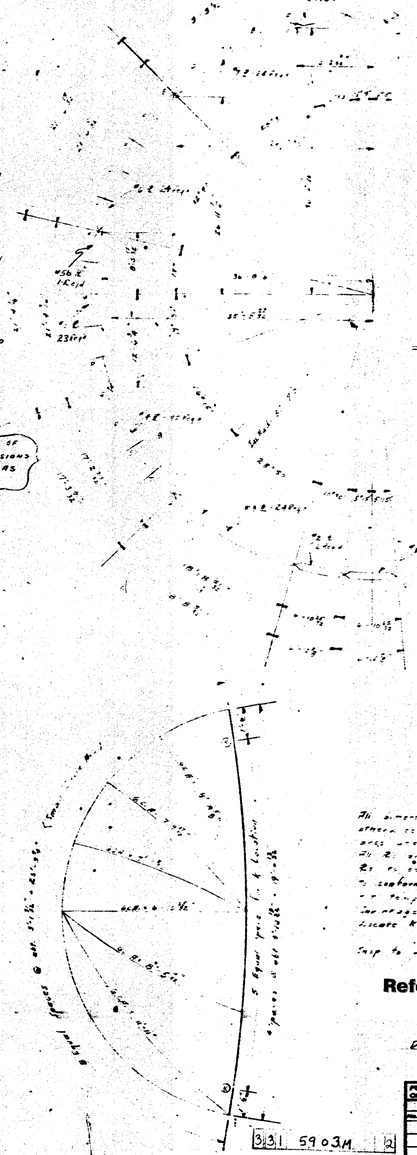

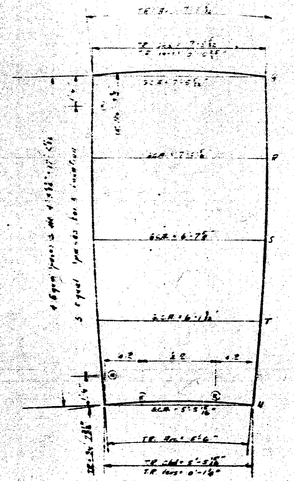

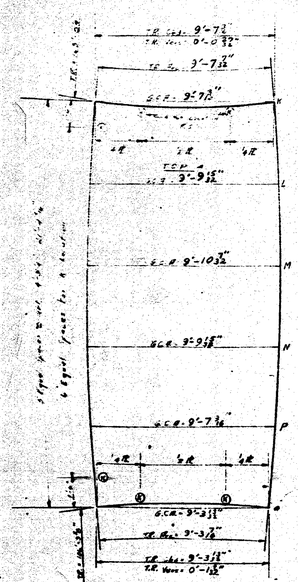

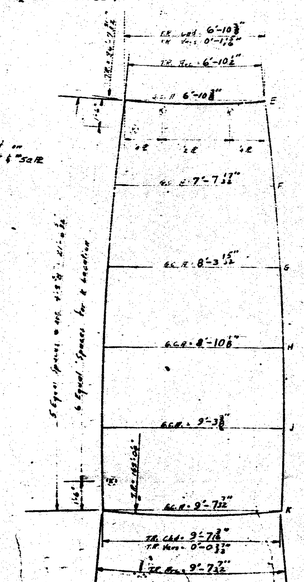

All dimensions are in inches or degrees unless otherwise noted. All welds are arc welds unless noted.
All PL are mild steel.
PL to be bent to 37°-0" (nominal) radius on template to give true curvature at neutral axis.
See erection diagram for splice.
Locate PL joints in field seams only.
Ship to match #3 PL, #4 PL & #7 PL into two PL assemblies.

Reference Drawing Only

Detail of Water Jet for one-two req'd

REVISIONS			
No.	Date	By	Remarks

CHICAGO BRIDGE & IRON COMPANY
CHICAGO, ILL. — BIRMINGHAM, ALA.
SALT LAKE CITY, UTAH — HOUSTON, TEXAS

Shell Plate Details
75'-5½" ϕ VACUUM SPHERE
WB5W
Marietta, Ohio

Drawing No. A-RR (modified-2-5-72) CONTRACT NO.
Date 4-14-72 Scale 1/4"=1'-0" 7-7912
DRAWING 2 OF 10

PLANS MADE AT SALT LAKE CITY

3131 5903.M 12

5903.M-2
SPHERE SHELL PLATE DETAILS
VACUUM SPHERE

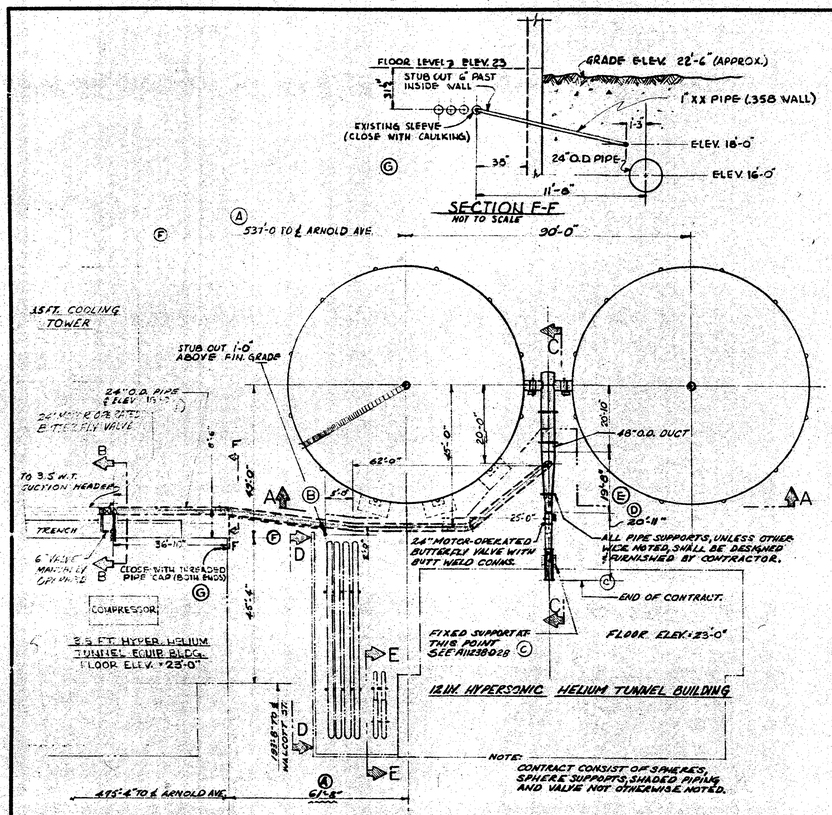

LET	DATE	REVISIONS	CKD.	APP.
G	1/2/59	CHANGED SECTION F-F	JM-S	
F	5/12/58	ADDED 1" XX PIPE (.358 WALL)	JM-S	
E	4/15/59	19'-8" WAS 20'-0" 20'-11" WAS 20'-7"	JM-S	
D	3/20/59	G1'-5" WAS G1'-6" 20'-1" WAS 20'-8" 24" I.D. WAS 19.25" I.D. ADDED VIEW D-D, VIEW E-E DET. C Ⓒ, DETAIL Ⓓ	JM-S	
C	2/18/59	CHANGED ARROW ON "END OF CONTRACT" NOTE DELETED "BY OTHERS & PLACED ELEV. 27'-3" WAS 27'-0" ADDED VIEW C-C	JM-S	
B	2/11/59	GENERAL REVISION OF PIPING ARRANGEMENT IN PLOT PLAN INCLUDING SECTION B-B	JM-S	
A	12/2/58	537'-0" WAS 532'-2" 1/2 WAS 55'-8" ELEV 22'-0" WAS 23'-0"	JM-S	

SCALE:	1" = 20'-0"
MATERIAL	
HEAT TREAT	
PROTECT FINISH	
QUAN. ASSEM. DWG. NO.	
INDEX	
LIMITS OR DIMENSIONS UNLESS OTHERWISE NOTED	
FRACTIONAL ±	1/16
DECIMAL ±	
ANGULAR ±	

DESIGN ENG. — BRANCH — SECTION
DRAWN BY F.W.POE — DIVISION FAR — CONST.
CHECKED BY — REV.
RESEARCH ENG.
APPROVED BY
APPROVED BY

NATIONAL AERONAUTICS AND SPACE ADMINISTRATION
AMES RESEARCH CENTER
MOFFETT FIELD, CALIFORNIA

12 INCH HYPERSONIC HELIUM TUNNEL
VACUUM STORAGE VESSELS & PIPING
LAYOUT & DETAILS

A 11238-D3

H 9-1533 PRE-COOLER REMOVED JCC 9-59

12" H.T. VACUUM STORAGE VESSELS & PIPING
SS-5983m-3

Reference Drawing Only

Spec.	Grade No.	Mark	Class No.	Description	Length ft	Length in
	12	p 59		Post Section		
A709C		p 301	12	Base PL 24"ϕ x 2½" w/4 Holes		
do		p 302	24	PL 5½ x ⅜ ϕ (PR 16 x 1'-10½)		
do		p 303	12	PL 15¹⁵/₁₆" ϕ x ⅜" w/Hole		
do		p 304	12	PL 10½" x ⅜ Roll to ϕ (w/4	4	3½
do		p 305	24	PL 120½" x ½ (do	4	3½
A7			24	Spec. Backup Bar 1½" x ⅜ for PR 2493	4	2½
Job 75		2493	48	Bar 25" x 1½ Bend w/Hole	0	5
Job 75		1831	12	Cantrapin 1⅝" ϕ x 5½	0	9½
A7		h 301	12	Bar 3"ϕ A1"	2	1
A7		h 302	24	Bar 3"ϕ A1"	1	0
A709C		p 308	12	PL 15⅝" ϕ x ⅜"		
				Top Post Section-Shop Attach to 5" Sch 80 Pipe		
A709C		p 306	12	PL 120½" x ½ ϕ Roll to coincide w/4	4	3½
A7			6	Spec. Backup Bar 1½" x ⅜	4	2½
A709C		p 303	12	PL 15¹⁵/₁₆" ϕ x ⅜"		
do		p 307	12	PL 5½ x ½ (do p 306)		
do		p 309	24	PL 5½ x ⅜ (Cut @ 68° (1'-9⅝")		
Job 75		2493	48	Bar 25" x ⅜ x 5⅛ Bend w/Hole Top Sch 293	6	5
A709C		p 310	12	PL 15⅝" ϕ x ⅜" Shop Tack		
CQ	38			Bolts 1" ϕ w/2 H Nuts Hvy Hex Nut	0	6½
CQ	96			1" ϕ Washer		

Box for Shipment

Reference Drawing Only

Contract No. 68-1X1
Bridge No. 1-MW-695-1.84
Over Tug Fork
Mingo County, W. Va.
Sheet No. 1 of 1 Sheets
Flood Control Project
Huntington District, Corps of Engineers

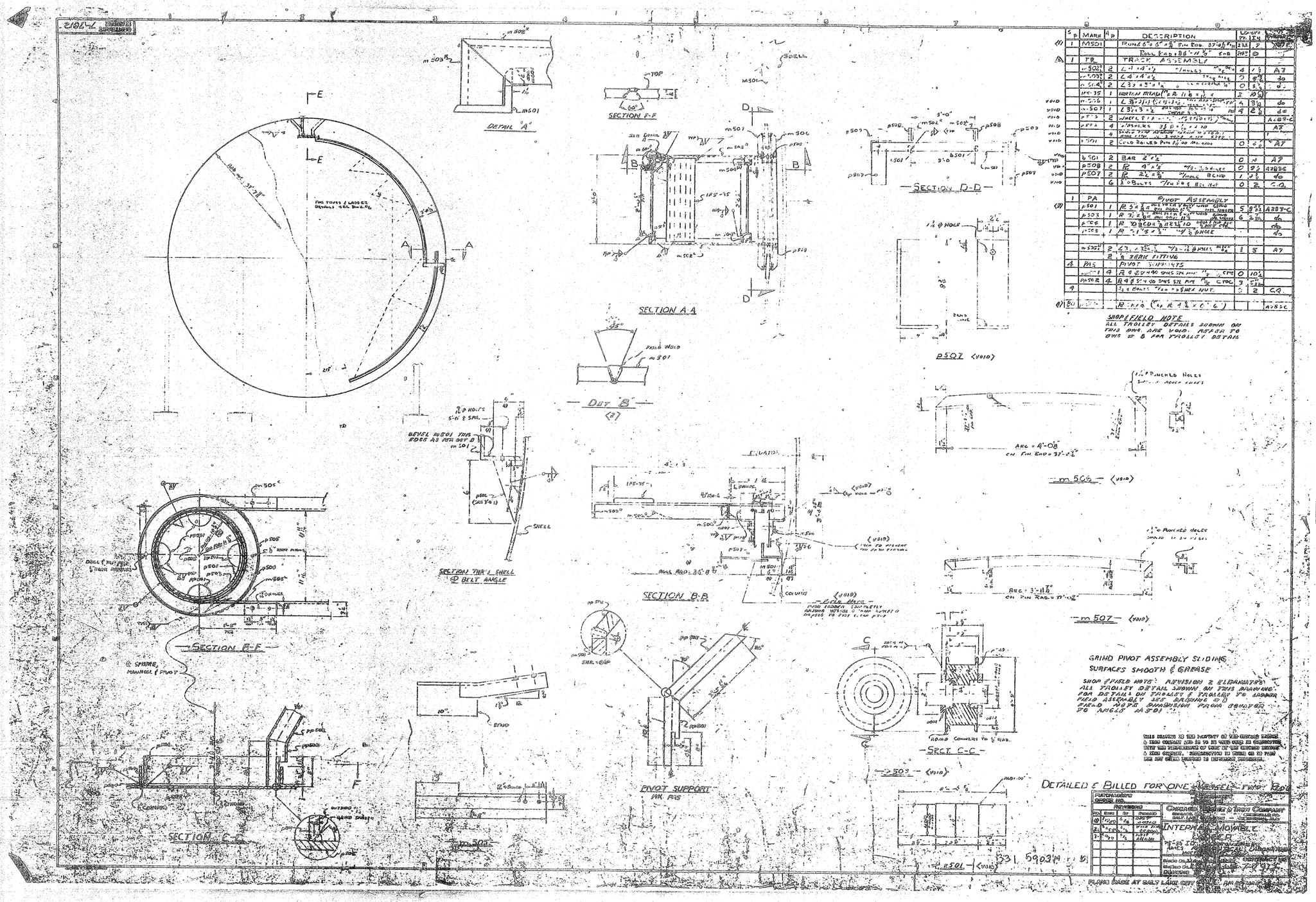

S	P	MARK	A	P	DESCRIPTION	LG-OVR		
						FT.	IN	WT.
(1)		M501			PLATE 6"t x 5'-8" Rad. Bar Rad. 37'-0 5/8"	23	2	
					Roll Rad = 36'-11 1/2"	249	@	
(2)	1	TR			TRACK ASSEMBLY			
		m 502	2		L 4" x 4" x 1/2"	4	1	A7
		m 503	2		L 4" x 4" x 1/2"	7	8 1/2	do
		m 504	2		L 3" x 3" x 1/2"	0	3 1/2	do
		m 505	1		HORIZON. BRACE L 2" x 2" x 1/4"	2	10 1/2	
VOID		m 506	1		L 3" x 3" x 1/2"	4	3 1/2	do
VOID		m 507	1		L 3" x 3" x 1/2"	4	2 1/2	do
VOID		P 505	2		WHEEL 8" x 2" x 1 1/2"			A-283-C
VOID		P 506	4		SPACERS 3" O.D. x 1" I.D.			A7
VOID			4		SHIMS TYP. AS REQ'D			
VOID		P 501	2		COLD ROLLED Pin 2" O.D.	0	6	A7
VOID		b 501	2		BAR 2" x 1/2"	0	11	A7
VOID		P 508	2		PL 4" x 1/2"	0	9 1/2	A-283-C
VOID		P 507	2		PL 2 1/2" x 1/2"	1	1 1/2	do
VOID			6		1" Ø Bolts 5" LG. Hex Nut	0	2	C.S.
	1	PA			PIVOT ASSEMBLY			
(3)		P 501	1		PL 5" x 2" x 1 1/2"	5	9 1/2	A-283-C
		P 503	1		PL 3" x 1" x 1/2"	6	3 1/2	do
		P 502	1		PL 10" x 8" x 1" w/ 3 1/2" Ø HOLE			do
		P 504	1		PL 2" x 1 1/2" x 1/2" w/ 1 1/2" Ø HOLE			do
		m 502	2		L 4" x 4" x 1/2" w/ 3/4" Ø PUNCH HOLES	1	5	A7
			2		3/4" Ø BEAM FITTING			
4		PLS			PIVOT SUPPORTS			
			4		PL 8" x 5" x 1/2"	CPC	0	10 1/2
		P 505 E	4		PL 8" x 5" x 1/2"	CPC	7	5 1/2
9					3/4" Ø BOLTS 4" LG. w/ HEX NUT		2	C.S.
(1)		BU			RING (41" I.D. x 7" x 6")			A-283-C

SHOP & FIELD NOTE
ALL TROLLEY DETAILS SHOWN ON THIS DWG. ARE VOID. REFER TO DWG # 6 FOR TROLLEY DETAILS

THIS DRAWING IS THE PROPERTY OF THE CONTRACTOR NAMED & SHALL NOT BE USED IN WHOLE OR IN PART IN CONNECTION WITH THE PERFORMANCE OF WORK BY THE CONTRACTOR NAMED, REPRODUCTION OF THESE OR ITS PARTS ARE STRICTLY PROHIBITED UNLESS.

331 5903M 6

Reference Drawing Only

[illegible]	[illegible]	[illegible]	[illegible]	[illegible]	[illegible]	[illegible]
2	TSS		TOP [illegible] SECTION			
	m601	2	[illegible]	[illegible]	[illegible]	[illegible]
			[illegible]			
	m602	2	[illegible]	[illegible]	[illegible]	A7
	m604	2	[illegible]	[illegible]	[illegible]	do
	m603	2	[illegible]	[illegible]	[illegible]	do
	m605	2	[illegible]	[illegible]	[illegible]	do
	m606	2	[illegible]	14	[illegible]	do
	b601	2	BAR [illegible]	3	[illegible]	do
	b604	2	BAR [illegible]	4	[illegible]	do
	r601	54	RUNG [illegible]	3	0	do
	m614	2	L 2x2x¼	13	1	do
1	LTS		TRUSS SECTION			
	m607	2	L 2½x2½x¼	[illegible]	[illegible]	A7
	b602	[illegible]	BAR 1½x¼	4	8	do
1	TS2		TRUSS SECTION			
	m608	2	L 2½x2½x¼	13	4	A7
	b602	6	BAR 1½x¼	4	6	do
1	TS3		TRUSS SECTION			
	m609	2	L 2½x2½x¼	9	9	A7
	b601	4	BAR 1½x¼	3	5	do
2	BLS		BOTTOM LADDER SECTION			
	m610	4	L 3½x3x5/16	33	3	A7
			(ROLL RAD = 36'-7⅝")			
	r601	47	RUNG ¾"⌀	2	0	A7
2	m611		L 2½x2½x¼	2	11	A7
2	m612		L 2½x2½x¼	4	7	do
2	m613		L 3½x3x5/16	3	0	do
2	b603		BAR 1½x¼	25	3	do

Billed & Detailed for one in two req'd

331-5903M-7

THIS DRAWING IS THE PROPERTY OF THE CHICAGO BRIDGE & IRON COMPANY AND IS TO BE USED ONLY IN CONNECTION WITH THE PERFORMANCE OF WORK BY THE CHICAGO BRIDGE & IRON COMPANY. REPRODUCTION IN WHOLE OR IN PART FOR ANY OTHER PURPOSE IS EXPRESSLY FORBIDDEN.

PURCHASER'S ORDER NO. — PURCHASER'S REQ'N NO.

REVISIONS: No. | DATE | BY | REMARKS

CHICAGO BRIDGE & IRON COMPANY
CHICAGO, ILL. — GREENVILLE, PA.
SALT LAKE CITY, UTAH — BIRMINGHAM, ALA.

INTERNAL MOVABLE LADDER & TRUSS
75-36 I.D. HORTONSPHERE
AMES AERONAUTICAL LAB.
MOFFETT FIELD, CALIF.

DRAWN [illegible] DATE 11-1-58 CONTRACT NO.
CHECKED D.R.L. 12-3-58 7-7912
DRAWING [illegible] OF [illegible]

PLANS MADE AT SALT LAKE CITY

Reference Drawing Only

INT. MOVABLE LADDER & TRUSS
331-5903 M-7

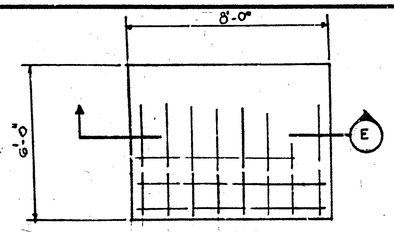

PLAN

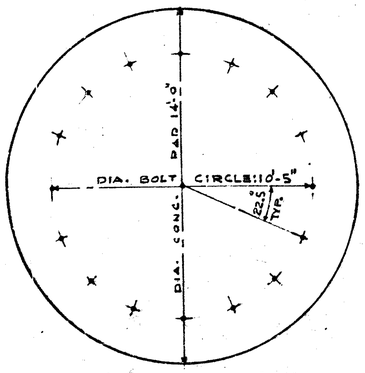

BOLTS LAY OUT

SCRUBBER TANK

3/8"=1'-0"

EXISTING HORTONSPHERE (REF.)

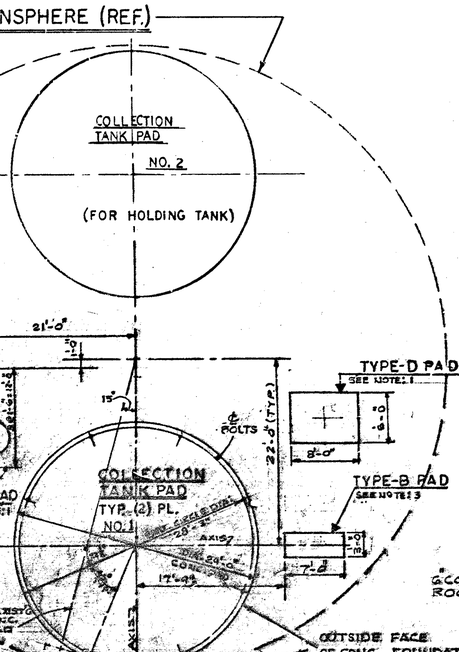

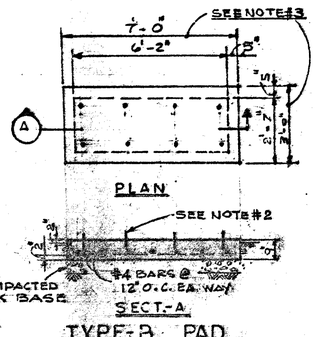

PLAN

SECT.-A

TYPE-B PAD

3/4"=1'-0"

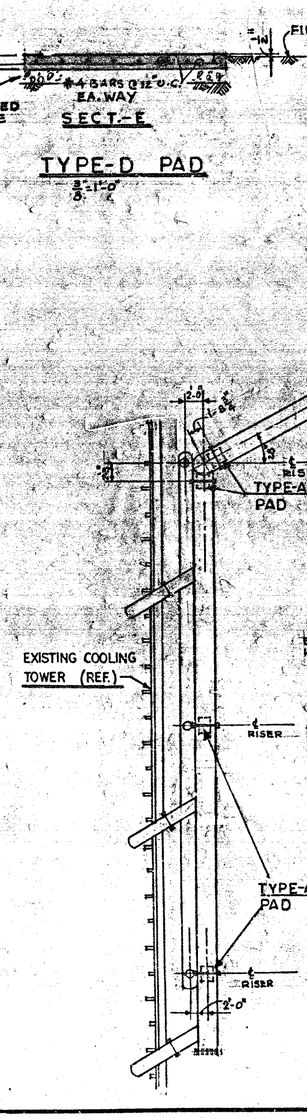

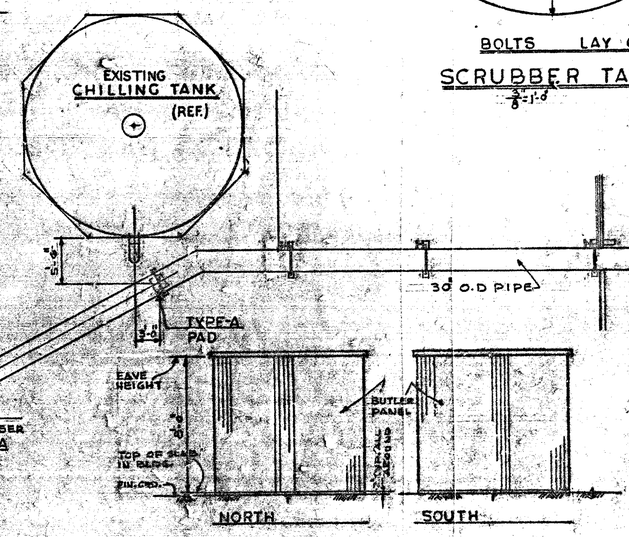

SHELTER EXTERIOR ELEVATIONS

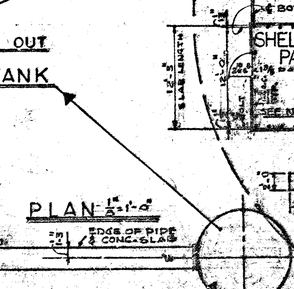

PLAN

PLAN

SECT-D

TYPE-C PAD

3/8"=1'-0"

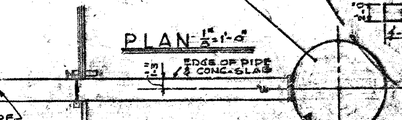

SECT-E

TYPE-A PAD

3/4"=1'-0"

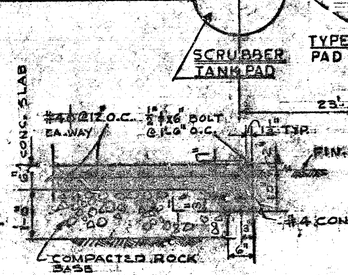

SECT-C

SHELTER PAD

3/4"=1'-0"

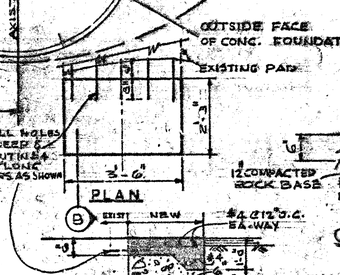

PLAN

SECT-B

TYPE-E PAD

1/2"=1'-0"

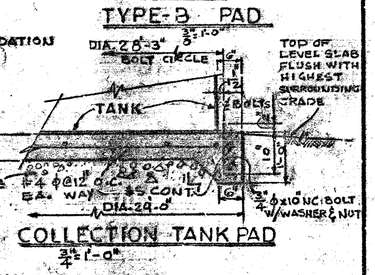

COLLECTION TANK PAD

3/4"=1'-0"

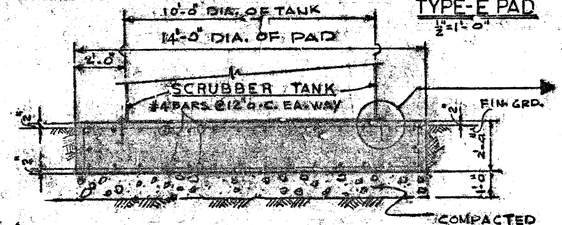

SCRUBBER TANK PAD

3/4"=1'-0"

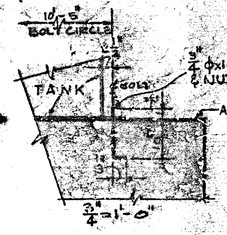

3/4"=1'-0"

NOTES:

1- LOCATE PAD IN FIELD

2- NUMBER & SIZES OF BOLTS TO BE DETERMINED BY SELECTION OF PUMPS.

3- APPROXIMATE SIZE, ACTUAL SIZE OF PAD TO BE DETERMINED BY SELECTION OF PUMPS.

4- SHELTER/SHELTER PAD DETAILS SHOWN FOR BUTLER BLDG ONLY. CONTRACTOR SHALL ALTER DETAILS AS REQUIRED BY ACTUAL BUILDING SELECTED.

NATIONAL AERONAUTICS AND SPACE ADMINISTRATION
AMES RESEARCH CENTER
MOFFETT FIELD, CALIFORNIA

NITROGEN OXIDES REMOVAL SYSTEM FOUNDATION DETAILS

DRAWN	TRACED	DATE	MATERIAL
P. SANGIL		7/74	

APPROVED H. A. Shin

SCALE AS SHOWN

A 13993-D13

A 13993 D13

2-18439

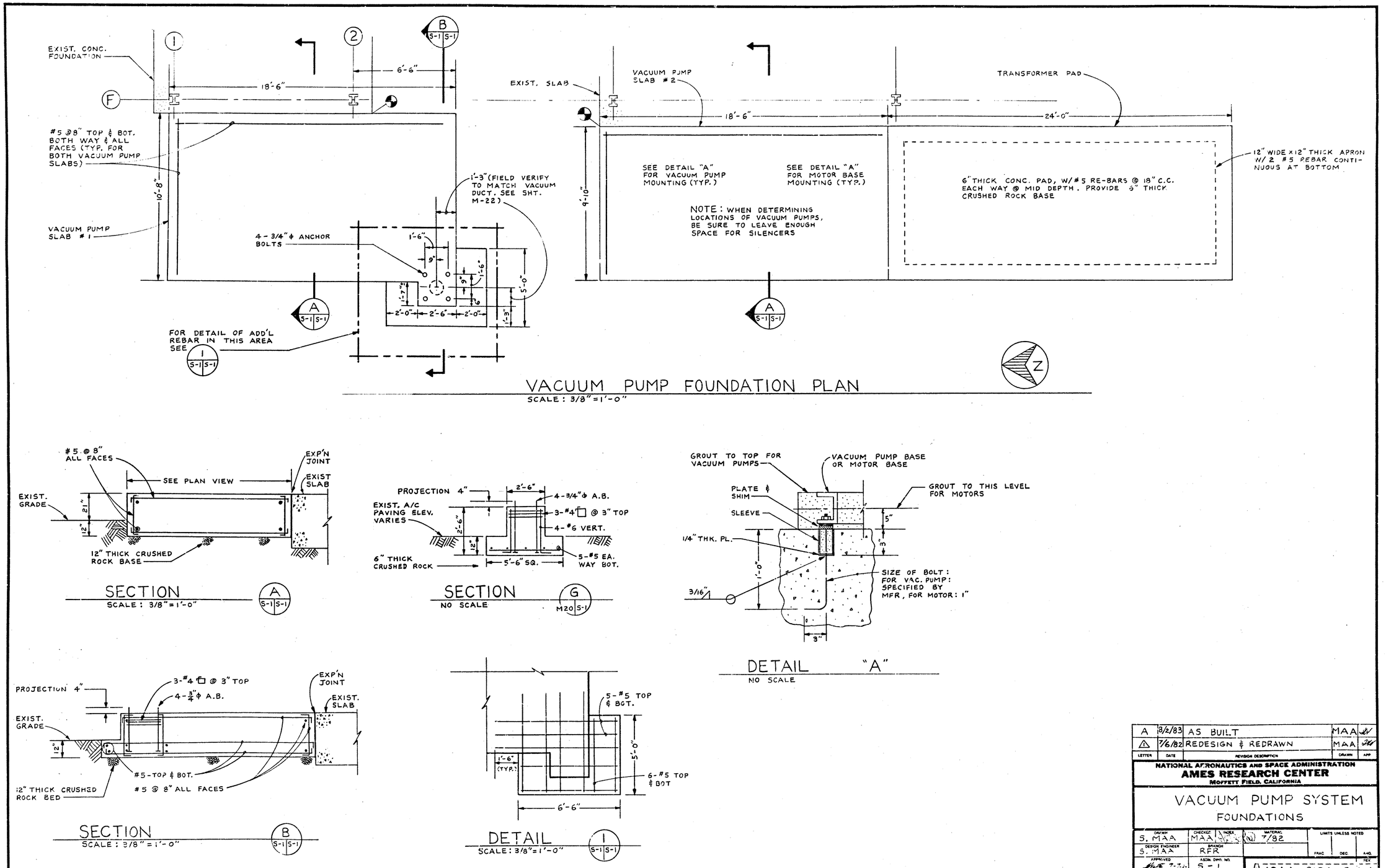

LETTER	DATE	REVISION DESCRIPTION	DRAWN	APP
A	8/2/83	AS BUILT	MAA	[illegible]
△1	7/6/82	REDESIGN & REDRAWN	MAA	[illegible]

NATIONAL AERONAUTICS AND SPACE ADMINISTRATION
AMES RESEARCH CENTER
MOFFETT FIELD, CALIFORNIA

VACUUM PUMP SYSTEM
FOUNDATIONS

DRAWN S. MAA	CHECKED MAA	MATERIAL 7/82	LIMITS UNLESS NOTED
DESIGN ENGINEER S. MAA	BRANCH RFR		FRAC DEC ANG
APPROVED [illegible] 7-7-82	ASSM. DWG. NO. S-1	A434A-8134-S-1	REV A
APPROVED	SCALE NOTED		

A434A-8134-S-1A
VACUUM PUMP SYSTEM FOUND.