LVEPDS-OI-001 Revision 2
October 25, 2007

TO: Distribution

FROM: Quyen Quach, Low Voltage Electrical System Manager

SUBJECT: Low Voltage Electrical Power Distribution System Operating Instruction: LVEPDS-OI-001, Revision 2
Naming Conventions for Low Voltage Panels and Low Voltage Apparatus

The following LVEPDS-OI-001, Revision 2, *Naming Conventions for Low Voltage Panels and Low Voltage Apparatus,* effective on the date that this document is signed, replaces the previous version of LVEPDS-OI-001, dated June 14, 2001, in its entirety.

Quyen T. Quach
NASA Glenn Research Center
Low Voltage Electrical System Manager

10/25/2007
Date

Concurrence:

Sue Gaudreau Chairperson,
Electrical Application Safety Committee

10/25/07
Date

Christine Greenwalt Acting Chief, Glenn Safety Office

11/9/07
Date

Gene Stygles Chief, Project Management Branch

10/25/07
Date

Distribution:
Joe Torri Chief, Systems Management Branch
Renee D. Palyo Chief, Engineering Management Branch
James J. Onest Chief, Operations Management Branch
Carmela Freeman, Configuration Control Management
Keith F. Sloan, Call Henry Inc.

LOW VOLTAGE ELECTRICAL POWER DISTRIBUTION SYSTEM
OPERATING INSTRUCTION – 001

LVEPDS-OI-001
REVISION 2

NAMING CONVENTIONS FOR LOW VOLTAGE PANELS
AND
LOW VOLTAGE APPARATUS

NAMING CONVENTIONS FOR LOW VOLTAGE (LV) PANELS AND LV APPARATUS

1.0 INTRODUCTION

All LV power and lighting panels and other apparatus connected to the LV electrical power distribution system at the Glenn Research Center shall have a standard uniform name associated with the source feeding the panels and/or apparatus.

Names are used by the Electrical Power Dispatchers, switchmen and electricians to identify specific panels, circuit breakers, transfer switches and other LV apparatus in the field.

Accurate and simple names are required in order for these people to perform their duty safely. Therefore, the names of LV panels and apparatus shall be placed under configuration control (Reference 1). LV panel and apparatus naming shall be managed by the LV Electrical Systems Manager.

The purpose of this operating instruction is to establish the basis of naming the LV panels and other LV apparatus. Future additions to the LV electrical power distribution system shall be named in accordance with the conventions established hereafter.

All high voltage (HV) equipment naming conventions shall follow HVEPS-OI-006 (Reference 2). HV is considered a rating greater than 600V, thus this includes building transformer converting 2.4kV to 480/277V or 208/120V.

Special naming consideration is given to equipment associated with the disconnecting of the low voltage winding from the load side of the transformer. See Secondary Device and Secondary Main in Section 2.3 and Special Naming Consideration in Sections 3.1.1 and 3.1.2.

2.0 GENERAL

2.1 INTENT

Changes in the configuration of the low voltage (LV) power distribution system may require renaming panels and apparatus. **The Building Manager shall be notified of any proposed modification to the low voltage system within, or associated with, their particular building by the party (such as, a Project Engineer or building electrician) proposing the construction activity. Prior to the construction activity, the party proposing the construction activity shall prepare a Facility Change Request and submit it for the approval of the Low Voltage Electrical Systems Manager. This is done in order to ensure that all proposed name changes comply with the Naming Conventions for LV panels and LV apparatus. No construction activity involving modifications to the low voltage system may proceed without the knowledge of the Building Manager and approval of the Low Voltage Electrical Systems Manager.**

2.2 ABBREVIATIONS

The following abbreviations shall be used to identify the LV apparatus:

M -- Main circuit breaker in switchboard or switchgear or panelboards or any self standing unit *
RB -- Ring bus
TIE -- Tie circuit breaker *
MCC -- Motor control center *
BD -- Bus duct or busway *
TR -- Transfer switch *
XR -- Transformer with LV primary windings, UPS (uninterruptible power supply), generator or other separately derived system *

* If the source of a device is in a different building, the device shall be tagged with a label indicating the device name, its power source and the building number. Ties shall also be labeled with the alternative power source. The entire label shall be underlined. For example, if a panel is fed from a source in another building, its entire "name" on the phenolic tag shall be underlined. Refer to Section 4.0, Name Tag Standards.

The following abbreviations shall be used as the voltage description:

F -- 480/277 Volt operation
P -- 240/120 and 208/120 Volt operation

NOTE: Letters F and P, shall be used only as voltage descriptors.

2.3 GENERAL DEFINITIONS

LV Power Distribution: Refers to 480 Volt, 277 Volt, 240 Volt, 208 Volt, and 120 Volt facilities in the electrical power distribution system.

LV: Electrical power system apparatus rated for operation at less than 600 Volts, rms, ac at 60 Hertz.

LV Apparatus: Refers in this document to LV electrical equipment such as: switchgear or switchboard, panelboard, motor control center, busway or bus duct, transfer switch, transformer with LV primary windings, circuit breaker, and other similar type equipment. These devices, where applicable, are defined elsewhere in this document.

HV: See HV Electric Power System Operating Instruction HVEPS-OI-006.

A. **Secondary Device (SD)**: A secondary device is considered to be the first device (disconnect switch, circuit breaker, or circuit switcher) used as the means of disconnecting the secondary of a **HV power transformer** from the load side of the transformer and where that device is also **co-located or in close proximity of the transformer and is not the Main device feeding a bus**.

B. **Secondary Main (SM)**: A secondary main is considered to be the first device (disconnect switch, circuit breaker, or circuit switcher) used as the means of disconnecting the secondary of a **HV power transformer** from the load side of the transformer and where that device is the **Main device feeding a bus**.

2.4 CHANGES TO THIS DOCUMENT

Changes are noted by a vertical line at the left edge.

3.0 NAMING PROCEDURE

The naming procedure described hereafter shall be followed for all LV equipment identified in this document.

This naming policy applies strictly to switchboards, switchgear, tie circuit breakers, panelboards, motor control centers, bus ducts, transfer switches and transformers with LV primary windings. Any other equipment not listed above, shall not have a unique name as further described in this policy, and consequently each building personnel shall assign names as deemed appropriate for each particular case.

3.1 SWITCHBOARD AND SWITCHGEAR

A switchboard as defined by the National Electric Code is a large single panel, frame or assembly of panels on which are mounted, on the face or back or both, switches, overcurrent and other protective devices, buses and usually instruments. Switchboards are generally accessible from the rear as well from the front and are not installed in cabinets.

The types of switchboards, classified by basic features of construction, are as follows:

A. Live-front vertical panels.
B. Dead-front boards.
C. Safety enclosed boards (metal-clad or metal-enclosed), commonly referred as "Switchgear."

Hereafter, switchboards and switchgear shall be referred as "switchboards".

The following conditions exist:

A. A switchboard, without a main circuit breaker (i.e. with main connecting lugs only), that is connected to the secondary side of a HV transformer, with or without a secondary main circuit breaker. See Section 3.1.1.
B. A switchboard, with a main circuit breaker, that is connected to the secondary side a HV transformer, with or without a secondary main circuit breaker. See Section 3.1.2.
C. Multiple switchboards, each without a main circuit breaker (i.e. with main connecting lugs only), that are connected in parallel to the secondary side of a HV transformer, with or without a secondary main circuit breaker. See Section 3.1.3.

D. Multiple switchboards, each with a main circuit breaker, that are connected in parallel to the secondary side of a HV transformer, with or without a main circuit breaker. See Section 3.1.4.

3.1.1 A Switchboard without a Main Circuit Breaker

Switchboard shall be identified with the following characters:

Letter, Number (XX)

Where :

Letter	:	The voltage description.
Number (XX)	:	Switchboard number; a sequential number starting with the number 01.
NOTE	:	Each voltage shall have its own numbering sequence starting with the number 01.
Example	:	See Figure 1.
P01	:	A 208 or 240 volt switchboard, numbered 01.

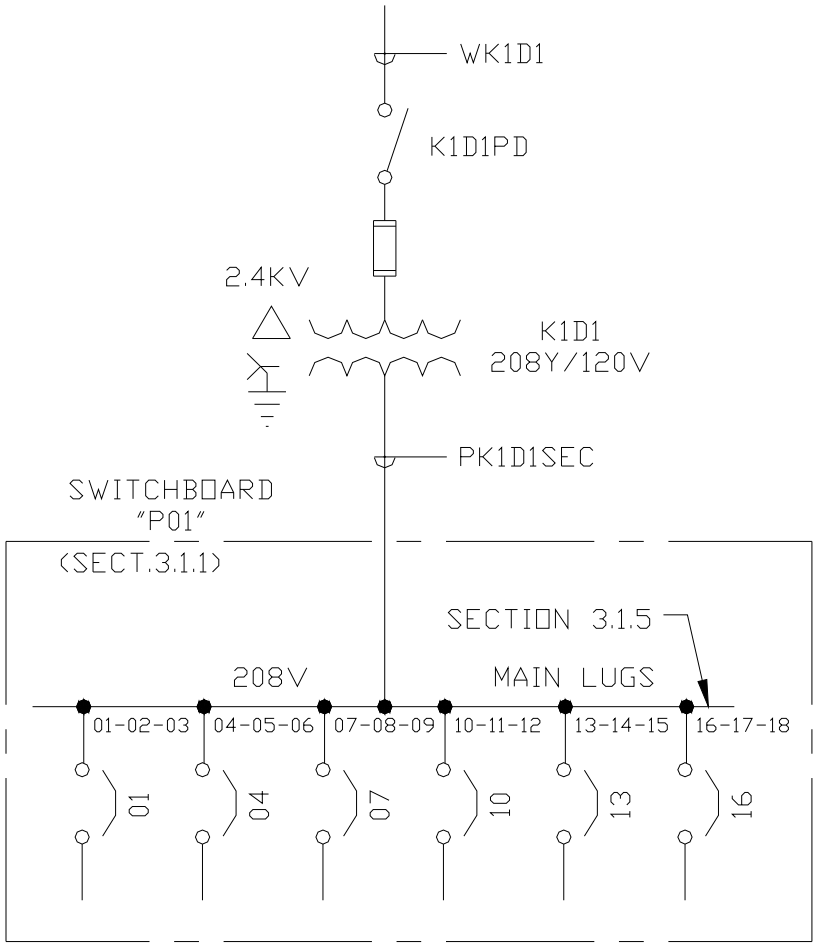

SWITCHBOARD WITHOUT MAIN CIRCUIT BREAKER (SECTION 3.1.1)
FIGURE 1

Special Naming Consideration: See Figure 2.

If the secondary main circuit breaker of a HV transformer connects directly to the main lugs of a single switchboard, a LV name shall be placed with the secondary main circuit breaker of a HV transformer. The LV nameplate shall be located below the HV nameplate. Naming procedure for this LV name is described in Section 3.1.2, naming of the main circuit breaker of a switchboard.

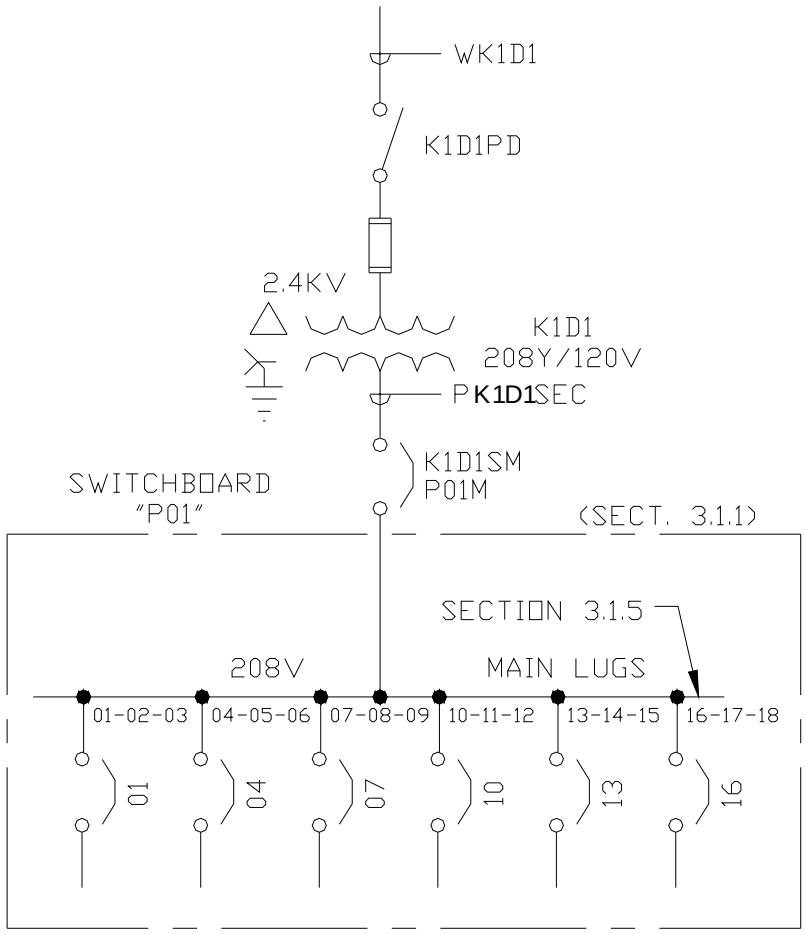

SWITCHBOARD WITHOUT
MAIN CIRCUIT BREAKER
(SPECIAL NAMING CONSIDERATION)
(SECTION 3.1.1)
FIGURE 2

3.1.2 A Switchboard with a Main Circuit Breaker

The main circuit breaker of a switchboard shall be identified with the following characters:

Switchboard Name, M

Where :

Switchboard name is described in Section 3.1.1.

M	:	Indicates a main circuit breaker.
NOTE	:	The main circuit breaker shall not be assigned a number in a switchboard.
Examples	:	See Figure 3.
F06M	:	The main circuit breaker of the 480V switchboard F06.

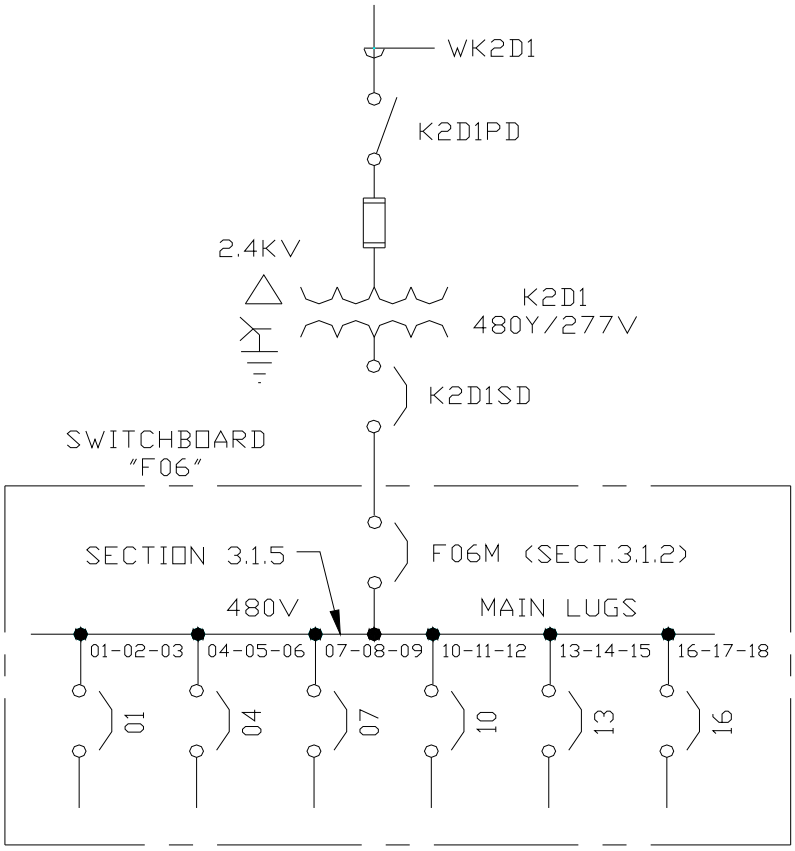

SWITCHBOARD WITH
MAIN CIRCUIT BREAKER
(SECTION 3.1.2)
FIGURE 3

Special Naming Consideration: See Figure 4.

If the main circuit breaker of a switchboard connects directly to the secondary side of a HV transformer, a LV name shall be placed with the secondary main circuit breaker of a HV transformer. The LV nameplate shall be located below the HV nameplate. Naming procedure for the LV nameplate is described in Section 3.1.2, naming of the main circuit breaker of a switchboard.

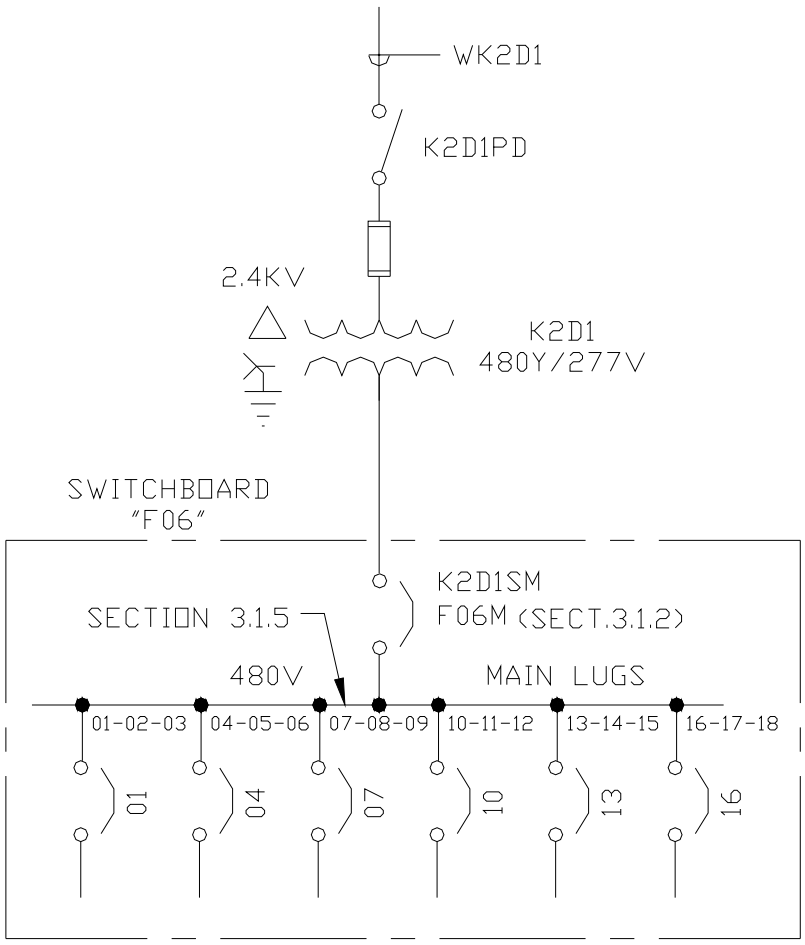

SWITCHBOARD WITH
MAIN CIRCUIT BREAKER
(SPECIAL NAMING CONSIDERATION)
(SECTION 3.1.2)
FIGURE 4

3.1.3 Multiple Switchboards without Main Circuit Breaker

Multiple switchboards without main circuit breakers and connected in parallel shall be identified with the following characters:

Letter, Number (XX), Letter

Where :

Letter	:	The voltage description.
Number (XX)	:	Switchboard number; a sequential number starting with the number 01.
Letter	:	Switchboard letter; an alphabetical letter starting with the letter A.
NOTE	:	The letters F, M and P shall not be used in this type of configuration. Each switchboard number shall have its own alphabetical sequence starting with the letter A.
Example	:	See Figure 5.
F08A	:	The first 480 volt switchboard, assigned the letter A, of a group of switchboards connected in parallel, assigned the number 08.
F08B	:	The second 480 volt switchboard, assigned a letter B, of a group of switchboards connected in parallel, assigned the number 08.

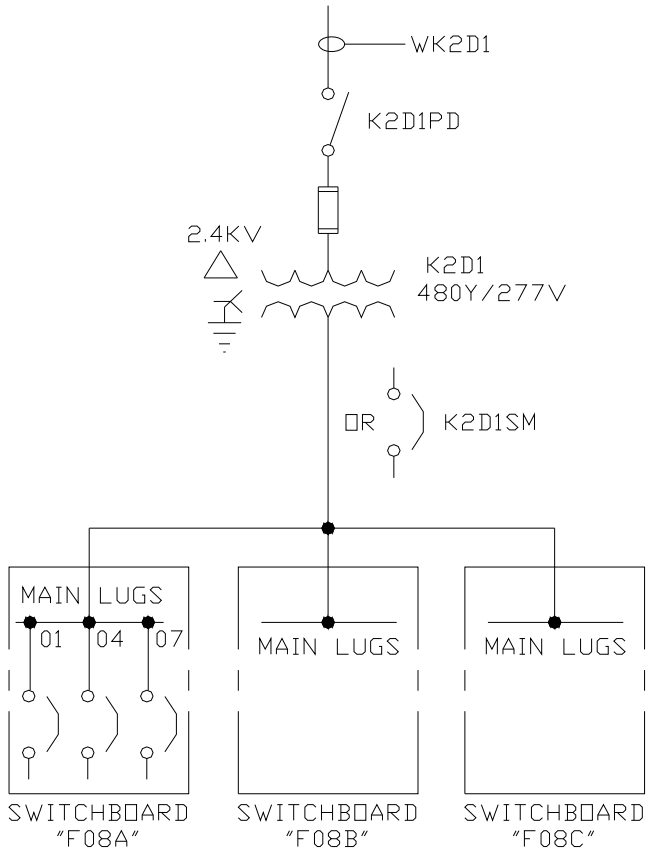

MULTIPLE SWITCHBOARDS WITHOUT MAIN CIRCUIT BREAKER
(SECTION 3.1.3)
FIGURE 5

3.1.4 Multiple Switchboards Each with a Main Circuit Breaker

The main circuit breaker of each switchboard shall be identified with the following characters:

Switchboard Name, M

Where :

Switchboard name is described in Section 3.1.3 (Example: F07A).

M	:	Indicates a main circuit breaker.
NOTE	:	The main circuit breaker shall not be assigned a number in a switchboard.
Example	:	See Figure 6.
F07AM	:	The main circuit breaker of the 480 volt switchboard F07A.

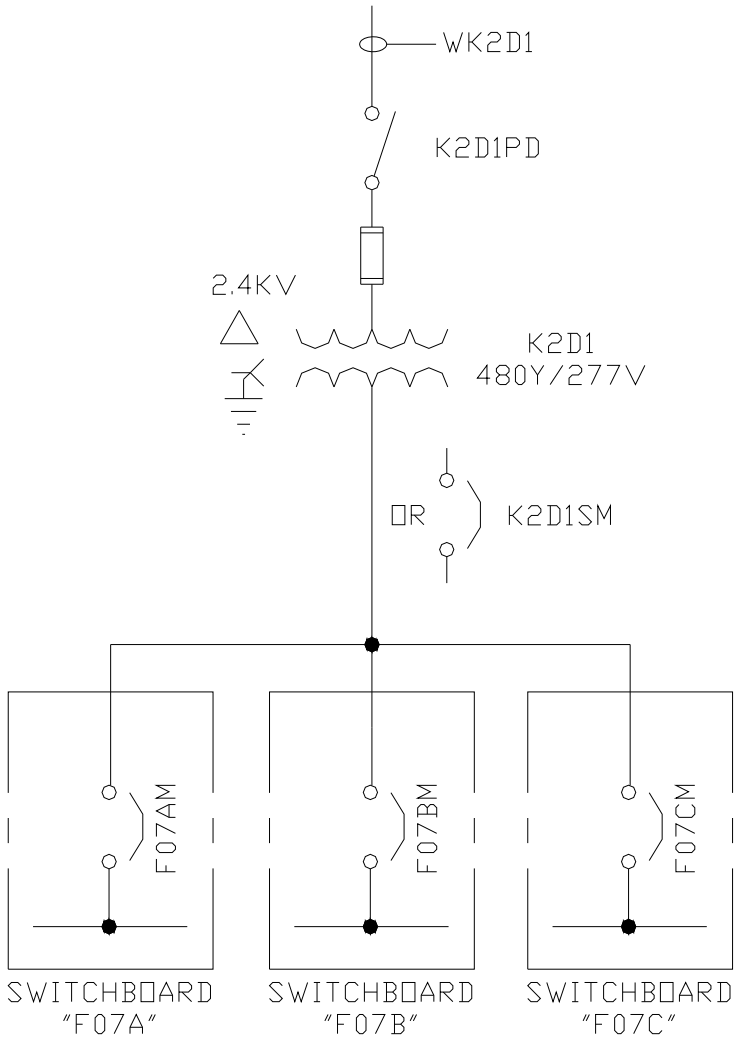

MULTIPLE SWITCHBOARDS EACH WITH A MAIN CIRCUIT BREAKER (SECTION 3.1.4)
FIGURE 6

3.1.5 A Branch Circuit Breaker in Switchboards

Branch circuit breakers shall be identified by their position number in a switchboard. Each available position (including tie circuit breaker, spare & space) in a switchboard shall be identified with a number. A breaker shall be identified by the first position occupied.

Number (XX)

Where :

Number (XX) : Breaker number; a number starting with the number 01.

NOTE : Tie and spare circuit breakers and spaces in switchboard shall be numbered.

Example : See Figure 7.

07 : A circuit breaker starting in position 7 of a switchboard.

A. If the breaker is a 3-pole breaker in a two-sided switchboard, the next breaker below it shall be identified as breaker 13.

B. If the breaker is a 3-pole breaker in a single-sided switchboard, the next breaker below it shall be identified as breaker 10.

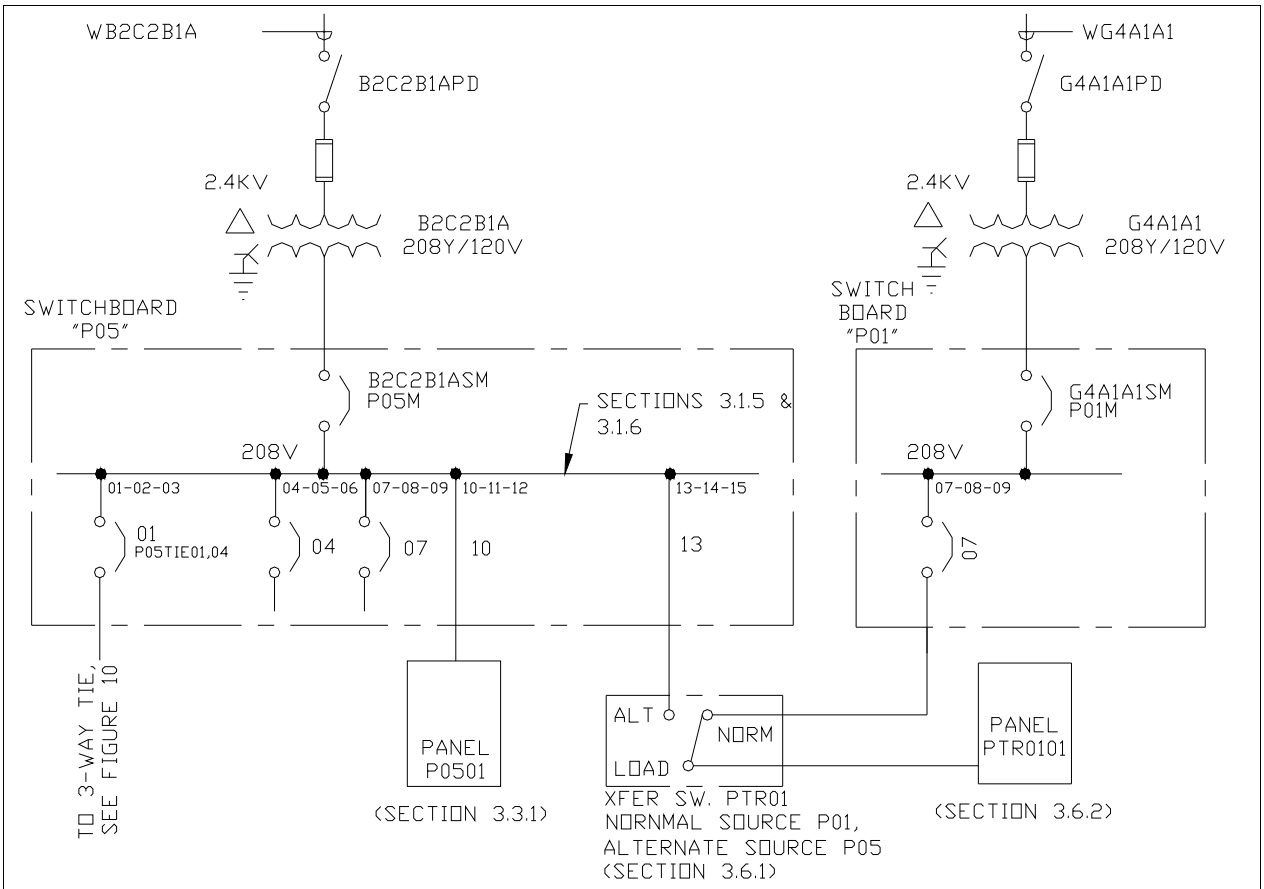

BRANCH CIRCUIT BREAKER AND
TAP CONNECTION IN SWITCHBOARD
(SECTIONS 3.1.5 & 3.1.6)
FIGURE 7

3.1.6 Tap Connection to a Switchboard Main Bus

A tap connection to a switchboard bus shall be identified as if it was an actual space occupied by a circuit breaker in a switchboard and the naming procedure is described in Section 3.1.5. If a tap connection is not in a breaker position, it is not identified with position number. See Figure 7.

3.2 LV TIE CIRCUIT BREAKER

A LV tie circuit breaker is an electrical device intended for connecting one or more loads between switchboards, for the purpose of supplying an alternate source of power, when needed.

Several configurations exist:

A) A tie circuit breaker that connects one or more loads between switchboards which are located within the same building. See Section 3.2.1.
B) A tie circuit breaker that connects one or more loads between switchboards which are located in different buildings. See Section 3.2.2
C) A three-way tie with two or three circuit breakers only. See Section 3.2.3.
D) Ring bus tie circuit breakers. See Section 3.2.4.

3.2.1 A Tie Circuit Breaker between Switchboards Located within the Same Buildings

Where a tie circuit breaker connects two switchboards within the same building, the tie circuit breaker shall be identified with the following characters:

Letter, Number (XX), TIE, Number (XX)

Where :

Letter	:	The voltage description.
Number (XX)	:	The number of a switchboard in which the tie circuit breaker is located.
TIE	:	Indicates a tie circuit breaker.
Number (XX)	:	The number of the switchboard being tied to.
Example	:	See Figure 8.
P13TIE14	:	A 208 volt tie circuit breaker located in switchboard P13, is tied to switchboard P14.
NOTE	:	A tie circuit breaker of double-ended switchboards shall follow the same naming procedure.
NOTE	:	When a tie circuit breaker connects switchboards operating at different voltages via a transformer, both voltage designation letters shall be used in the device name. A note, in parenthesis, stating the tie is accomplished via a transformer, shall be added to the end of the device name. For example, P02TIEF01 (via XFMR PXR01).

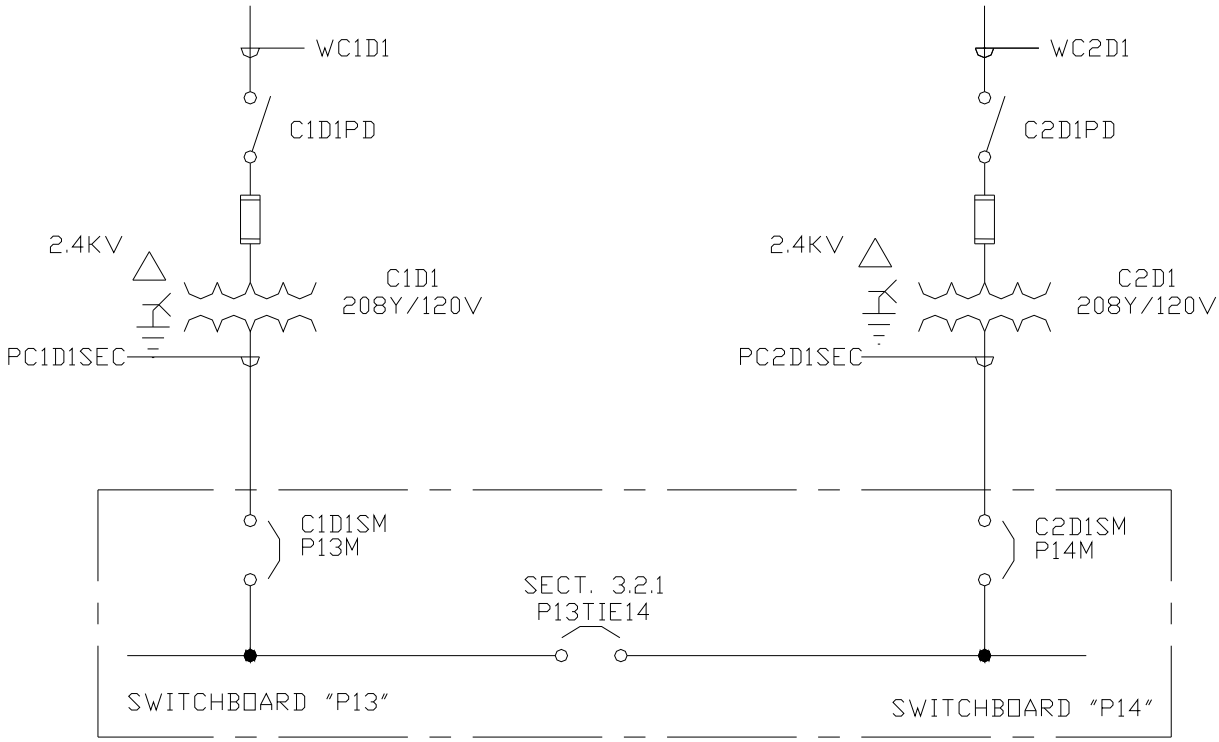

LOW VOLTAGE TIE CIRCUIT BREAKER BETWEEN
SWITCHBOARDS EITHER INDIVIDUAL OR DOUBLE ENDED TYPE
LOCATED WITHIN THE SAME BUILDING
(SECTION 3.2.1)
FIGURE 8

3.2.2 A Tie Circuit Breaker between Switchboards Located in Different Buildings

Where a tie circuit breaker connects two switchboards located in different buildings, the tie circuit breaker shall be identified with the following characters:

Letter, Number (XX), TIE, Number (XX), BLDG Number (XXX)

Where :

Letter	:	The voltage description.
Number (XX)	:	The number of a switchboard in which the tie circuit breaker is located.
TIE	:	Indicates a tie circuit breaker.
Number (XX)	:	The number of the switchboard being tied to.
BLDG Number (XXX)	:	Building number where the other tie circuit breaker is located.
Examples	:	See Figure 9.
P05TIE04 BLDG125	:	A 208 volt tie circuit breaker in switchboard P05 (located in Building 64) is tied to a tie circuit breaker in switchboard P04 located in Building 125.

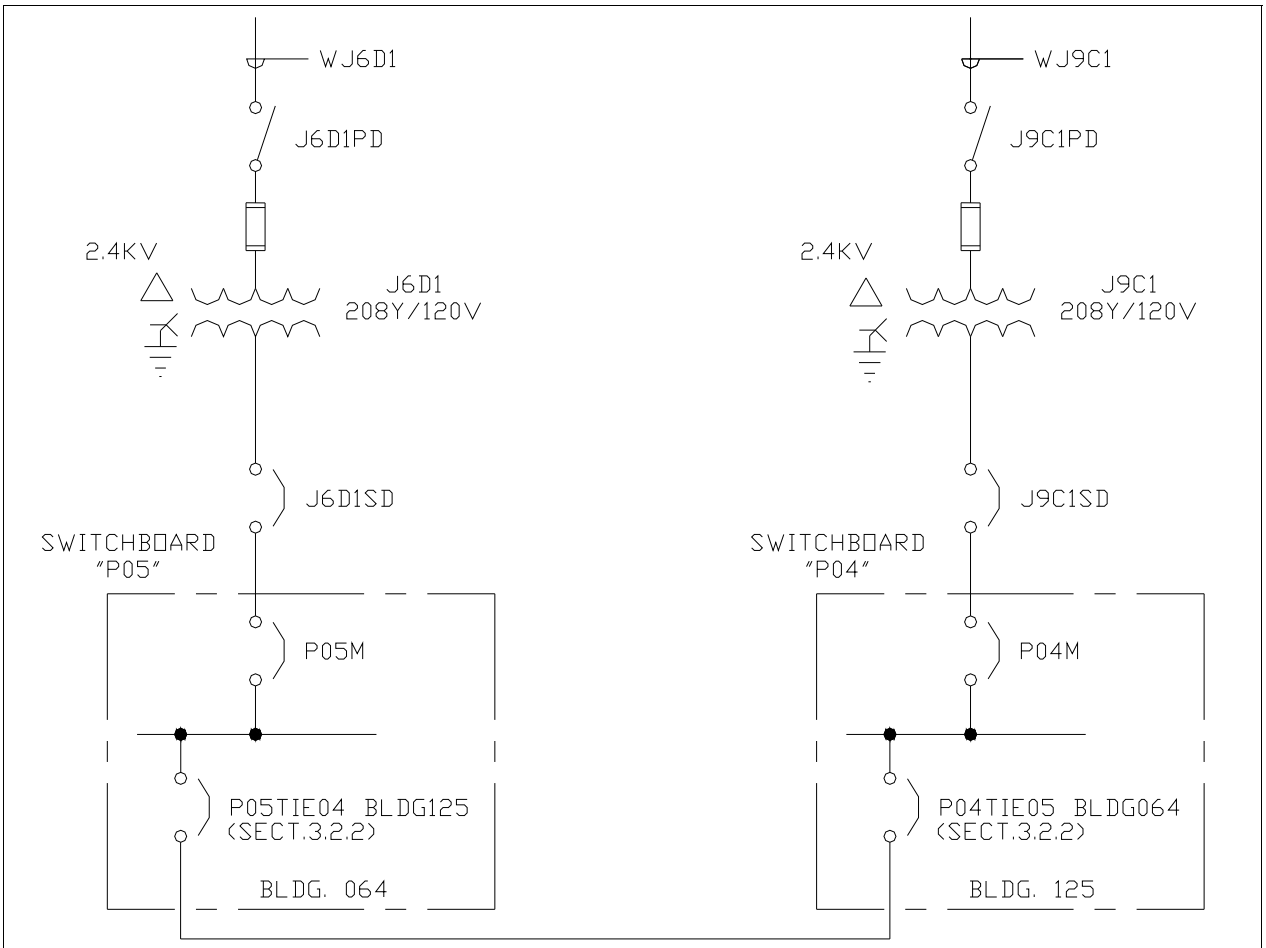

LOW VOLTAGE TIE CIRCUIT BREAKER BETWEEN SWITCHBOARDS LOCATED IN DIFFERENT BUILDINGS (SECTION 3.2.2)
FIGURE 9

3.2.3 Three-Way Tie With Two or Three Tie Circuit Breakers

This condition exists where three switchboards are connected together by means of three tie circuit breakers or two tie circuit breakers and a solid connection to a bus of a third switchboard. The tie circuit breakers shall be identified with the following characters:

Letter, Number (XX), TIE, Number (XX), Comma, Number (XX)

Where :

Letter	:	The voltage description.
Number (XX)	:	The switchboard number where the tie circuit breaker is located.
TIE	:	Indicates a tie circuit breaker.
Number (XX)	:	The number of a first switchboard being tied to.
Comma	:	Used to separate the switchboard numbers that are being tied.
Number (XX)	:	The number of a second switchboard being tied to.
Example	:	See Figure 10.
P05TIE01,04	:	A 208 volt tie circuit breaker in switchboard P05 is tied to a solid bus connection in switchboard P01 and a tie circuit breaker in switchboard P04.
NOTE	:	In a three-way tie, the number of the second and third switchboards being tied to shall be listed in ascending order.

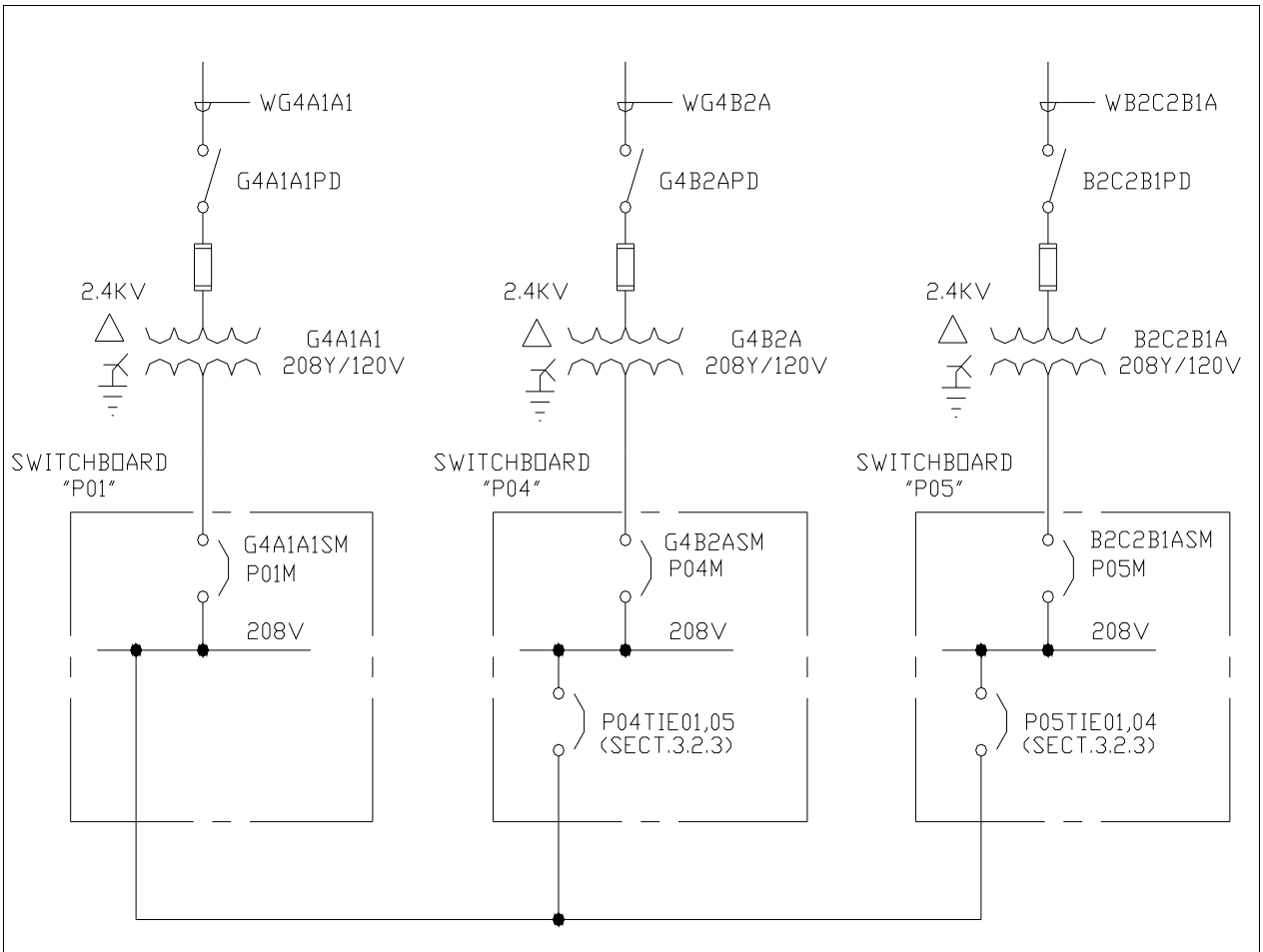

LOW VOLTAGE 3-WAY TIE WITH 2 CIRCUIT BREAKERS ONLY

(SECTION 3.2.3)
FIGURE 10

3.2.4 Ring Bus Tie Circuit Breakers

This is a configuration where a group of switchboards can be connected to a common “ring bus” to provide an alternate source of power via a tie circuit breaker.

A “ring bus” consists of a series of LV cables forming a “ring” that switchboards can tie onto.

A tie circuit breaker shall be identified with the following characters:

Letter, Number (XX), TIE, RB

Where :

Letter	:	The voltage description.
Number (XX)	:	The switchboard number where the tie circuit breaker is located.
TIE	:	Indicates a tie circuit breaker.
RB	:	Indicates a ring bus.
Example	:	See Figure 11.
P02TIERB	:	A 208 volt tie circuit breaker located in switchboard P02 is tied to a ring bus.

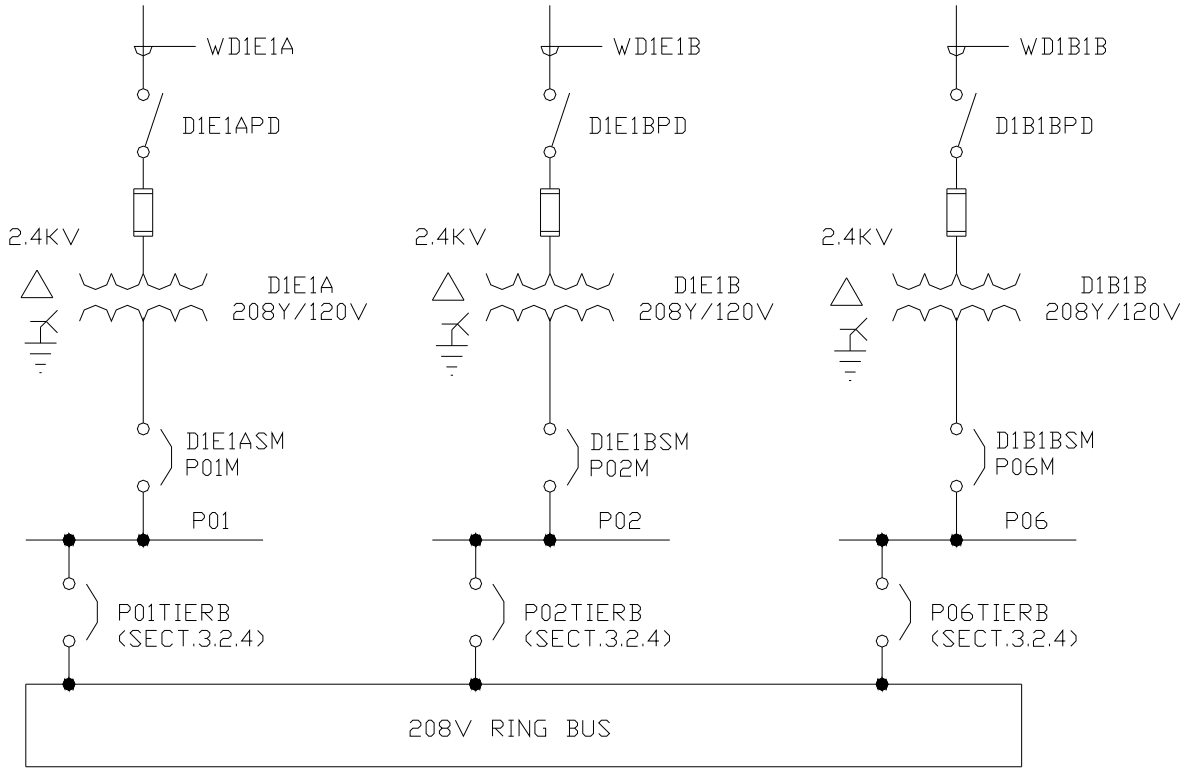

LOW VOLTAGE RING BUS TIE CIRCUIT BREAKERS
(SECTION 3.2.4)
FIGURE 11

3.3 LV PANELBOARDS

A LV panelboard, as defined by the National Electric Code, is a single panel or group of panels (single enclosure) designed for assembly in the form of a single panel, including buses, and with or without switches and/or automatic overcurrent devices, and with or without circuit breakers for the control of light, heat, or power circuits, designed to be placed in a cabinet or cutout box placed in or against a wall or partition and accessible only from the front.

LV panelboards, commonly referred to as "panels" used for lighting and power can be divided into these categories:

A. Single (series) fed panels. See Section 3.3.1.
B. Daisy-chain (parallel) fed panels. See Section 3.3.2.
C. Mixed panel connections. See Section 3.3.3.

3.3.1 Single (Series) Panels Fed from a Switchboard

These types of panels shall be identified with the following characters:

Switchboard Name, Number (XX)
Where :
Switchboard name is described in Sections 3.1.1 (Single switchboard) and 3.1.3 (Multiple switchboards connected in parallel.).
Number (XX) : Panel number; a sequential number starting with the number 01.
NOTE : Panels fed by each switchboard shall have their own numbering sequence starting with the number 01.
Examples : See Figure 12, Columns A and C.
P1301 : The first 208 volt panel fed from switchboard P13.

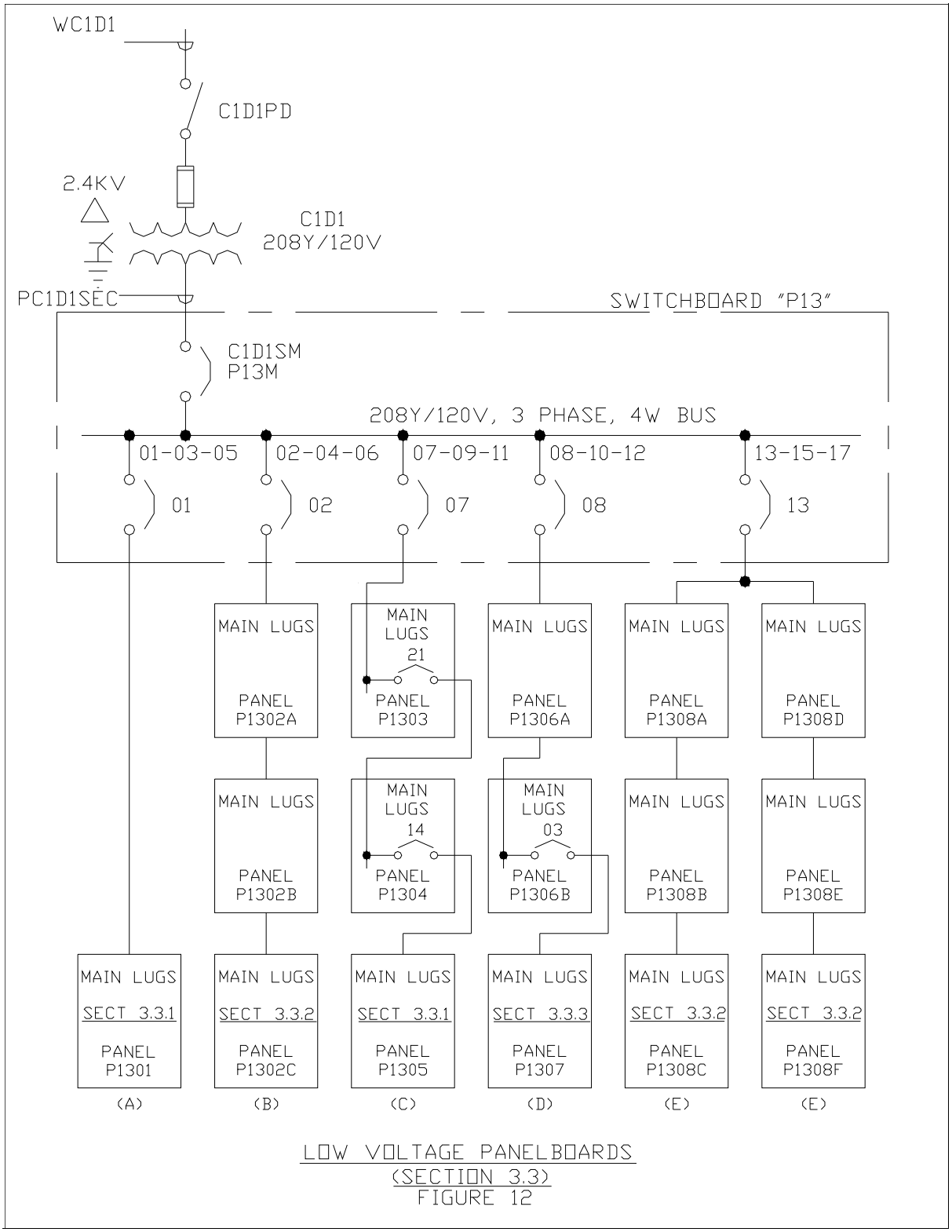

LOW VOLTAGE PANELBOARDS
(SECTION 3.3)
FIGURE 12

3.3.2 Daisy-Chained (Parallel) Panels Fed from a Switchboard

These are panels that are fed directly from the main lugs of the previous panel(s) and are connected to the same feeder. Panels connected in this manner shall be identified with the following characters:

Switchboard Name, Number (XX), Letter

Where :

Switchboard name is described in Sections 3.1.1 (Single switchboard) and 3.1.3 (Multiple switchboards connected in parallel.).

Number (XX) : The number assigned to a group of daisy-chained panels; a sequential number starting with the number 01.

NOTE : Panels fed from each switchboard shall have their own numbering sequence starting with the number 01.

Letter : An alphabetical sequence starting with the letter A.

NOTE : The letters F, M, and P shall not be used in this configuration. Each daisy-chained panel group shall have its own alphabetical sequence starting with the letter A.

Examples : See Figure 12, Columns B and E.

P1302A : The first 208 volt panel, assigned the letter A, of a group of daisy-chained panels, assigned the number 02, fed from switchboard P13.

P1302B : The second 208 volt panel, assigned the letter B, of a group of daisy-chained panels, assigned the number 02, fed from switchboard P13.

3.3.3 Mixed Panel Connections

When panels fed from a switchboard and are connected in a mixed manner, that is, some are connected in parallel and some are connected in series via branch circuit breakers from other panels, then panels connected in parallel shall be named by the procedure established in Section 3.3.2 and panels connected in series via circuit breakers shall be named by the procedure established in Section 3.3.1. For example, see Figure 12, Column D

3.4 LV MOTOR CONTROL CENTERS

Motor control centers, as defined by ANSI NEMA ICS 2, are referred to as one or more vertical sections joined together to form a rigid, free standing assembly, housing circuit breakers, disconnect switches, motor starters, instruments and other miscellaneous electrical devices.

3.4.1 Motor Control Centers

Motor control centers shall be identified with the following characters:

Letter, MCC, Number (XX)

Where :

Letter : The voltage description.

MCC	:	Indicates a motor control center.
Number (XX)	:	Motor control center number; a sequential number starting with the number 01.
NOTE	:	Each voltage shall have its own number sequence starting with the number 01.
Example	:	See Figure 13.
PMCC01	:	A 208 volt motor control center, numbered 01.

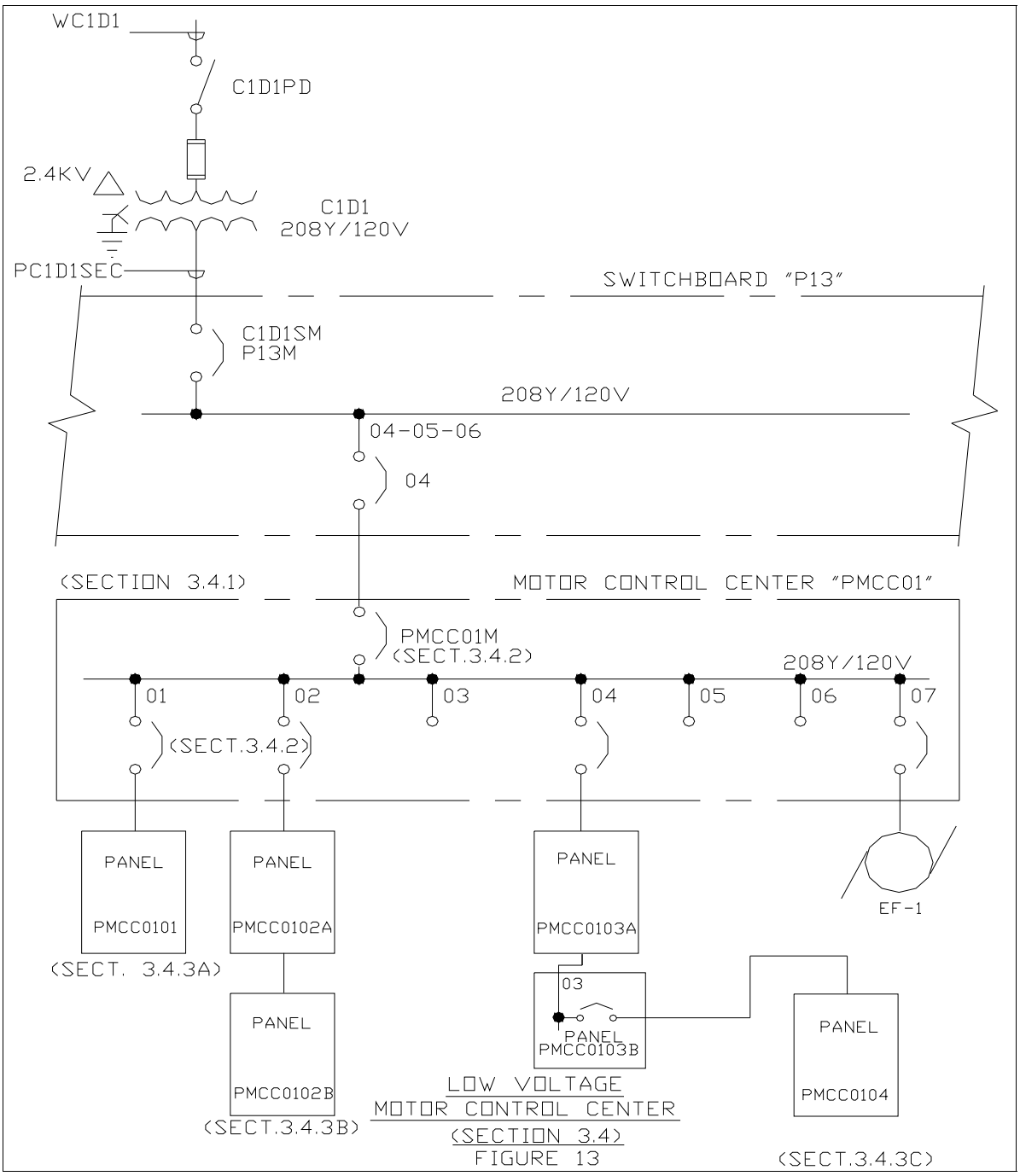

LOW VOLTAGE
MOTOR CONTROL CENTER
(SECTION 3.4)
FIGURE 13

3.4.2 Motor Control Center Cubicles

The main circuit breaker of a motor control center shall be identified with the following characters:

Motor Control Center Name, M
Where :
Motor control center name is described in Section 3.4.1.

M	:	Indicates a main circuit breaker.
NOTE	:	The main circuit breaker shall not be assigned a number in a motor control center.
Examples	:	See Figure 13.
PMCC01M	:	The main circuit breaker of a 208 volt motor control center PMCC01.

All cubicles, including spares and space except the main circuit breaker and tie breaker(s), in the motor control center, shall be identified by their position and numbered sequentially starting with the number 01. They shall be identified with the following characters:

Number (XX)
Where :

Number	:	Cubicle number; a sequential number starting with the number 01.
NOTE	:	Spare units and spaces in a motor control center shall be numbered.
Example	:	See Figure 13.
03	:	Cubicle number 03 in a motor control center.

3.4.3 Panel(s) Fed from a Motor Control Center

A. Single (series) panel(s) fed from a motor control center shall be identified with the following characters:

Motor Control Center Name, Number (XX)
Where :
Motor control center name is described in Section 3.4.1.

Number (XX)	:	Panel number; a sequential number starting with the number 01.
NOTE	:	Panels fed from each motor control center shall have their own numbering sequence starting with the number 01.
Example	:	See Figure 13.
PMCC0101	:	A 208 volt panel, numbered 01, fed from motor control center PMCC01.

B. Daisy-chained (parallel) panels fed from a motor control center shall be identified with the following characters:

Motor Control Center Name, Number (XX), Letter

Where:

Motor control center name is described in Section 3.4.1.

Number (XX)	:	A number assigned to a group of daisy-chained panels; a sequential number starting with the number 01.
NOTE	:	Panels fed from each motor control center shall have their own numbering sequence starting with the number 01.
Letter	:	An alphabetical sequence starting with the letter A of a group of daisy-chained panels.
NOTE	:	The letters F, M, and P shall not be used in this configuration. Each daisy-chained panel group shall have its own alphabetical sequence starting with the letter A.
Example	:	See Figure 13.
PMCC0102A	:	The first 208 volt panel, assigned the letter A, of a group of daisy-chained panels, assigned the number 02, fed from motor control center PMCC01.
PMCC0102B	:	The second 208 volt panel, assigned the letter B, of a group of daisy-chained panels, assigned the number 02, fed from motor control PMCC01.

C. When panels are connected in a mixed manner and fed from a motor control center; panels connected in parallel shall be named by the procedure established in Section 3.4.3B and panels connected in series via circuit breakers shall be named by the procedure established in Section 3.4.3A. See Figure 13.

3.5 LV BUS DUCT (BUSWAY)

Bus Duct (Busway), as defined in NEMA Standards is a prefabricated electric distribution system consisting of bus bars in a protective enclosure. There are two types of busway:

A. A feeder busway is a busway without plug-in openings, which is intended primarily for conducting electric power from the source of supply to distribution centers.
B. A plug-in busway is a busway having plug-in opening on one or both sides at spaced intervals, offering means of electrical connection using plug-in or bolt-on devices to connect to the busbars.

The components associated with the busway are called “Plug-in” devices. These devices can be circuit breakers or disconnect switches.

Hereafter, bus duct and busway shall be referred as “bus duct”.

3.5.1 Bus Duct

A bus duct shall be identified with the following characters:

Letter, BD, Number (XX)

Where :

Letter	:	The voltage description.
BD	:	Indicates a bus duct.
Number (XX)	:	Bus duct number; a sequential number starting with the number 01.
NOTE	:	Each voltage level shall have its own numbering sequence starting with the number 01.
Example	:	See Figure 14.
PBD01	:	A 208 volt bus duct, numbered 01.

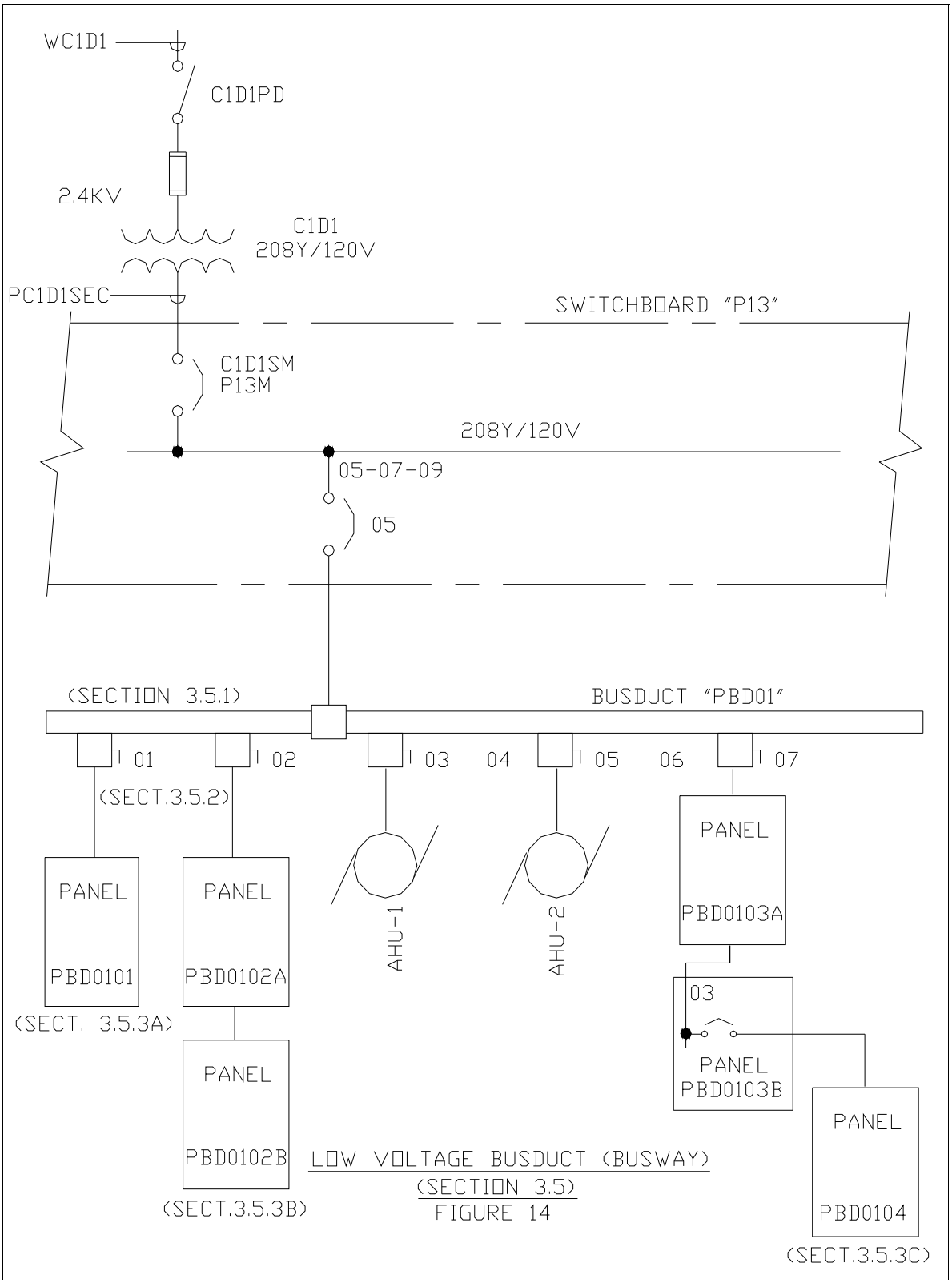

LOW VOLTAGE BUSDUCT (BUSWAY)
(SECTION 3.5)
FIGURE 14

3.5.2 Bus Duct Plug-In Devices

All plug-in positions in a bus duct shall be sequentially numbered starting with the number 01. The identification shall be of size and placement to be visible to personnel without the use of ladders. They shall be identified with the following characters:

Number (XX)
Where :
Number (XX) : Plug-in device number; a sequential number starting with 01.
NOTE : All positions in a bus duct shall be numbered.
Example : See Figure 14.
11 : A plug-in device located in position 11 of a bus duct.

3.5.3 Load from a Bus Duct

Load, as referred here, is a panel or panels connected to the bus duct plug-in device.

A. Single (series) panels fed from a bus duct shall be identified with the following characters:

Bus Duct Name, Number (XX)
Where :
Bus duct name is described in Section 3.5.1.
Number (XX) : A panel number; a sequential number starting with the number 01.
NOTE : Panels fed from each bus duct shall have their own numbering sequence starting with the number 01.
Example : See Figure 14.
PBD0101 : A 208 volt panel, numbered 01, fed from bus duct PBD01.

B. Daisy-chained (parallel) panels fed from a bus duct shall be identified with the following characters:

Bus Duct Name, Number (XX), Letter
Where:
Bus duct name is described in Section 3.5.1 (Example: PBD01).
Number (XX) : A number assigned to a group of daisy-chained panels; a sequential number starting with the number 01.
NOTE : Panels fed from each bus duct shall have their own numbering sequence starting with the number 01.
Letter : An alphabetical sequence starting with the letter A of a group of daisy-chained panels.
NOTE : The letters F, M, and P shall not be used in this configuration. Each daisy-chained panel group shall have its own alphabetical sequence starting with the letter A.
Example : See Figure 14.

PDB0102A : The first 208 volt panel, assigned the letter A, of a group of daisy-chained panels, assigned the number 02, fed from bus duct PBD01.

PBD0102B : The second 208 volt panel, assigned the letter B, of a group of daisy-chained panels, assigned the number 02, fed from bus duct PBD01.

C. When panels are connected in a mixed manner and fed from a bus duct; panels connected in parallel shall be named by the procedure established in Section 3.5.3B and panels connected in series via circuit breakers shall be named by the procedure established in Section 3.5.3A. See Figure 14.

3.6 LV TRANSFER SWITCH

A LV transfer switch is an electrical device intended for transferring one or more loads from one power source to another. A transfer switch can be either automatic or manual.

The identification of the LV transfer switch can be separated into two categories:

A. A transfer switch that transfers the source from one switchboard to another switchboard located within the same building. See Figure 15.
B. A transfer switch that transfers the source from a switchboard located in one building to a switchboard located in a different building. See Figure 18.

3.6.1 Transfer Switches between Switchboards

The transfer switches between switchboards shall be identified with the following characters:

Letter, TR, Number (XX)

Where :

Letter : The voltage description.
TR : Indicates a transfer switch.
Number (XX) : Transfer switch number; a sequential number starting with the 01.
NOTE : Each voltage level shall have its own numbering sequence starting with the number 01.
Example : See Figure 15.
PTR01 : A 208 volt transfer switch, numbered 01.

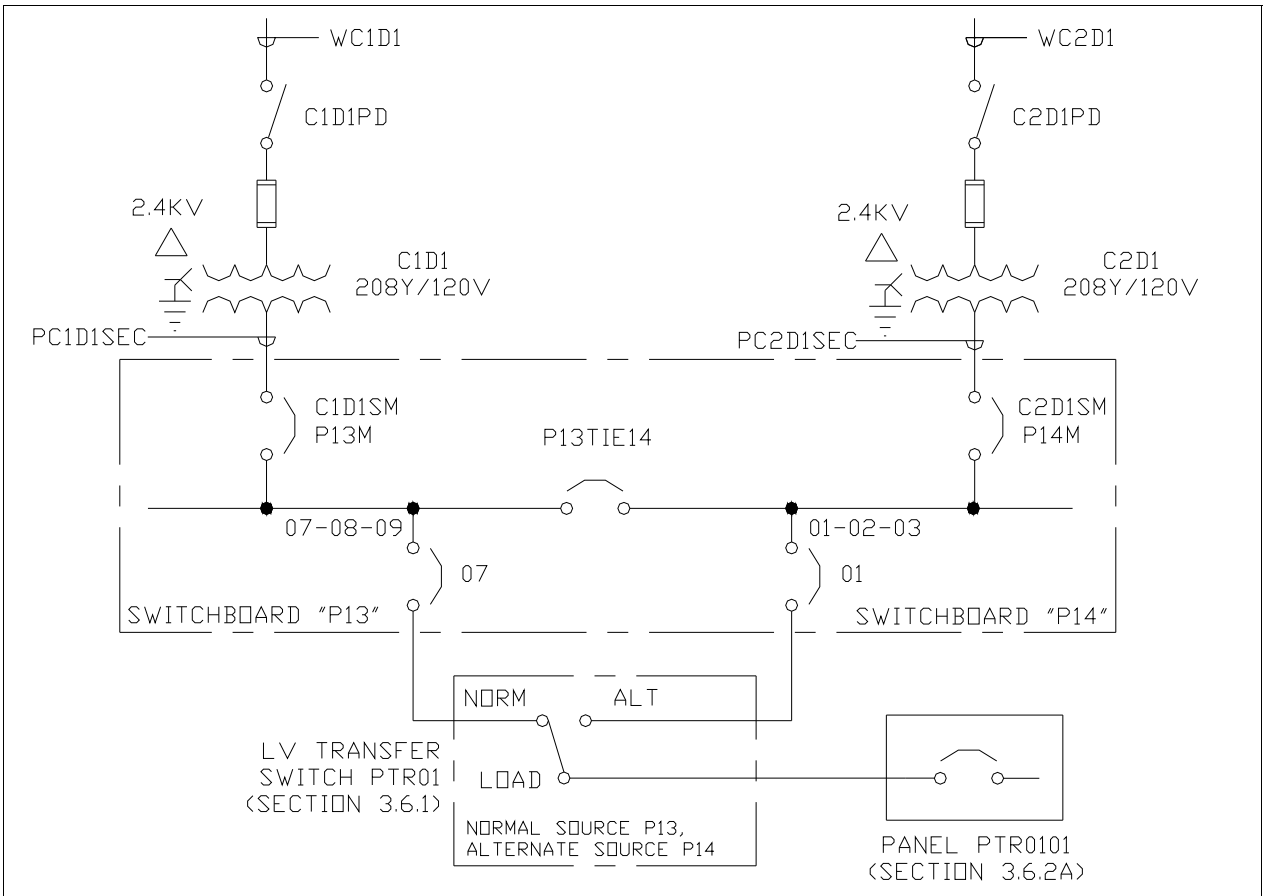

LOW VOLTAGE TRANSFER SWITCH

(SECTION 3.6)
FIGURE 15

3.6.2 Load Fed from a LV Transfer Switch

Load, as referred here, is a panel(s) or motor control center connected to the load side of a transfer switch.

A. Single (series) panels fed from a LV transfer switch shall be identified with the following characters:

Transfer Switch Name, Number (XX)
Where :
Transfer switch name is described in Section 3.6.1.

Number (XX)	:	A panel number; a sequential number starting with the number 01.
NOTE	:	Each transfer switch name shall have its own numbering sequence starting with the number 01.
Example	:	See Figure 15.
PTR0101	:	A 208 volt panel, numbered 01, fed from transfer switch PTR01.

B. Daisy-chained (parallel) panels fed from a transfer switch shall be identified with the following characters:

Transfer Switch Name, Number (XX), Letter
Where:
Transfer switch name is described in Section 3.6.1.

Number (XX)	:	A number assigned to a group of daisy-chained panels; a sequential number starting with the number 01.
NOTE	:	Panels fed from each transfer switch shall have their own numbering sequence starting with the number 01.
Letter	:	An alphabetical sequence starting with the letter A of a group of daisy-chained panels.
NOTE	:	The letters F, M, and P shall not be used in this configuration. Each daisy-chained panel group shall have its own alphabetical letter starting with the letter A.
Example	:	See Figure 16.
PTR0101A	:	The first 208 volt panel, assigned the letter A, of a group of daisy-chained panels, assigned a number 01, fed from transfer switch PTR01.
PTR0101B	:	The second 208 volt panel, assigned the letter B, of a group of daisy-chained panels, assigned the number 01, fed from transfer switch PTR01.

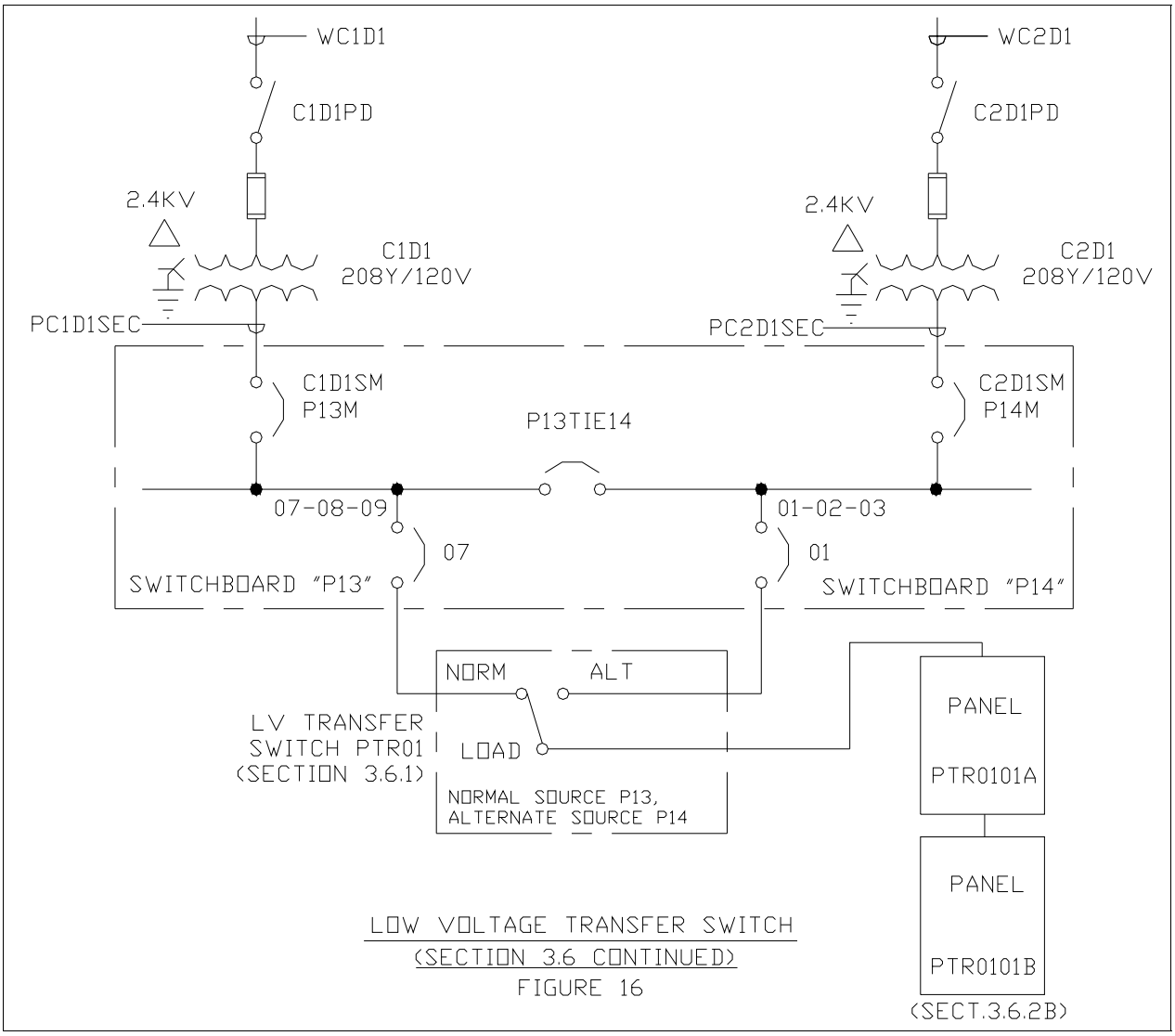

LOW VOLTAGE TRANSFER SWITCH
(SECTION 3.6 CONTINUED)
FIGURE 16

C. When panels are connected in a mixed manner and fed from a LV transfer switch; panels connected in parallel shall be named by the procedure established in Section 3.6.2B and panels connected in series via circuit breakers shall be named by the procedure established in Section 3.6.2A. See Figure 17.

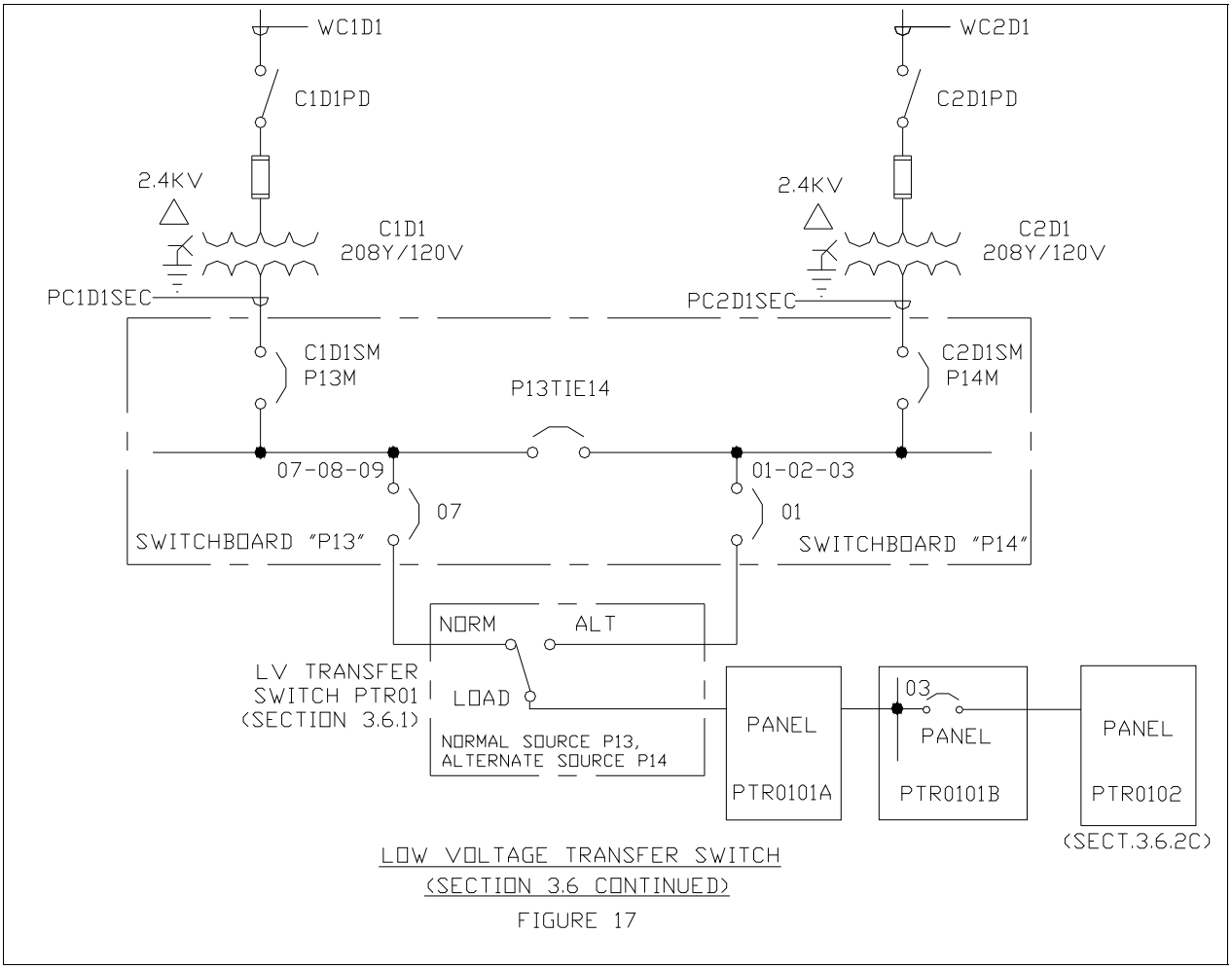

LOW VOLTAGE TRANSFER SWITCH
(SECTION 3.6 CONTINUED)
FIGURE 17

D. A motor control center fed from a LV transfer switch; naming procedure for motor control center is described in Section 3.4.1. See Figure 18.

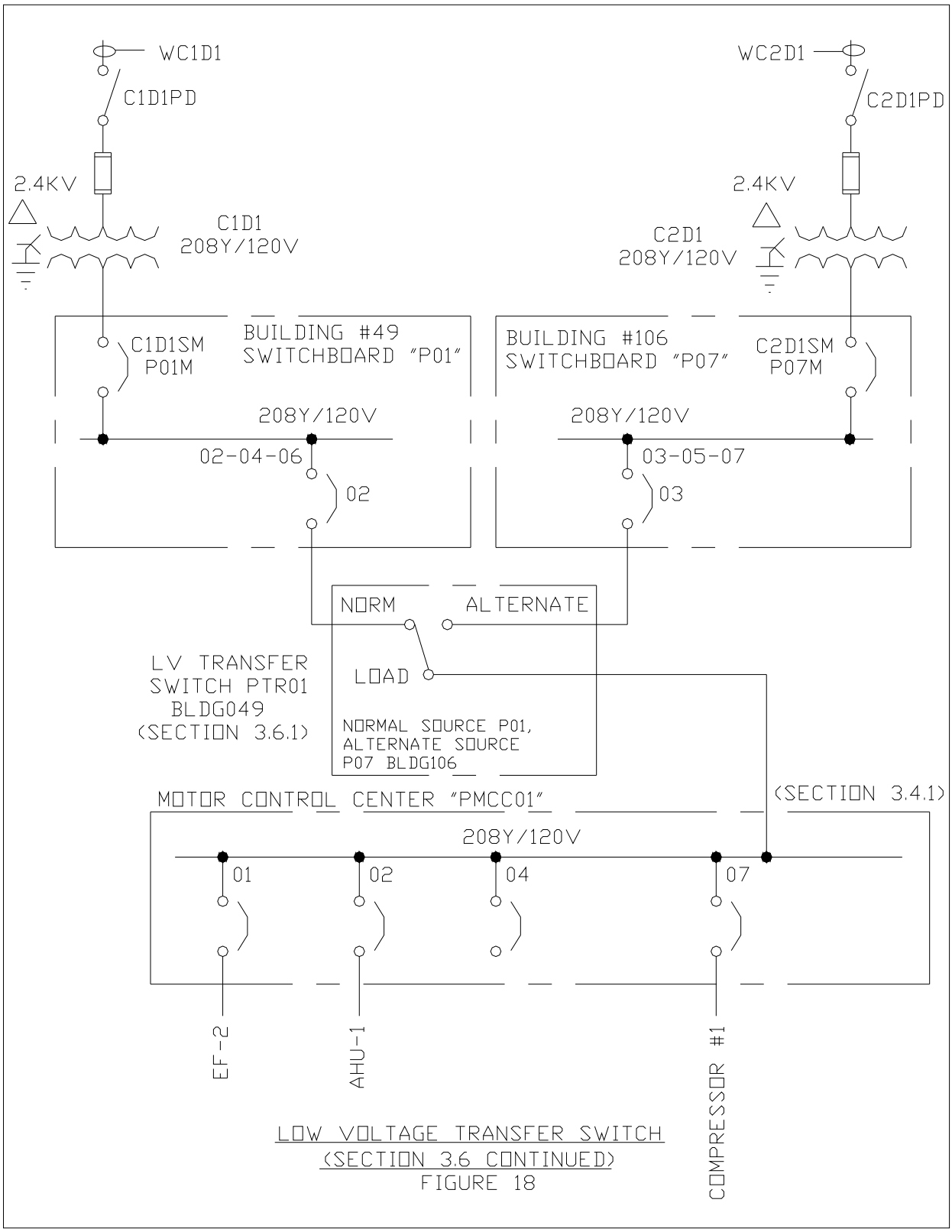

LOW VOLTAGE TRANSFER SWITCH
(SECTION 3.6 CONTINUED)
FIGURE 18

3.7 LV TRANSFORMER

A LV transformer, includes isolation transformer, is a transformer with LV primary windings. It is an electrical device that converts electrical power in an ac system at one voltage and current level in a primary circuit to another voltage and current level, or the same voltage level for isolation purposes, in the secondary circuit without the use of rotating parts.

3.7.1 LV Transformer

A LV transformer shall be identified with the following characters:

Letter, XR, Number (XX)

Where :

Letter	:	The transformer **secondary** voltage description.
XR	:	Indicates a transformer.
Number (XX)	:	A transformer number; a sequential number starting with the number 01.
NOTE	:	Each transformer secondary voltage shall have its own numbering sequence starting with the number 01.
Example	:	See Figure 19.
PXR02	:	A LV transformer with 208 volt secondary, numbered 02.

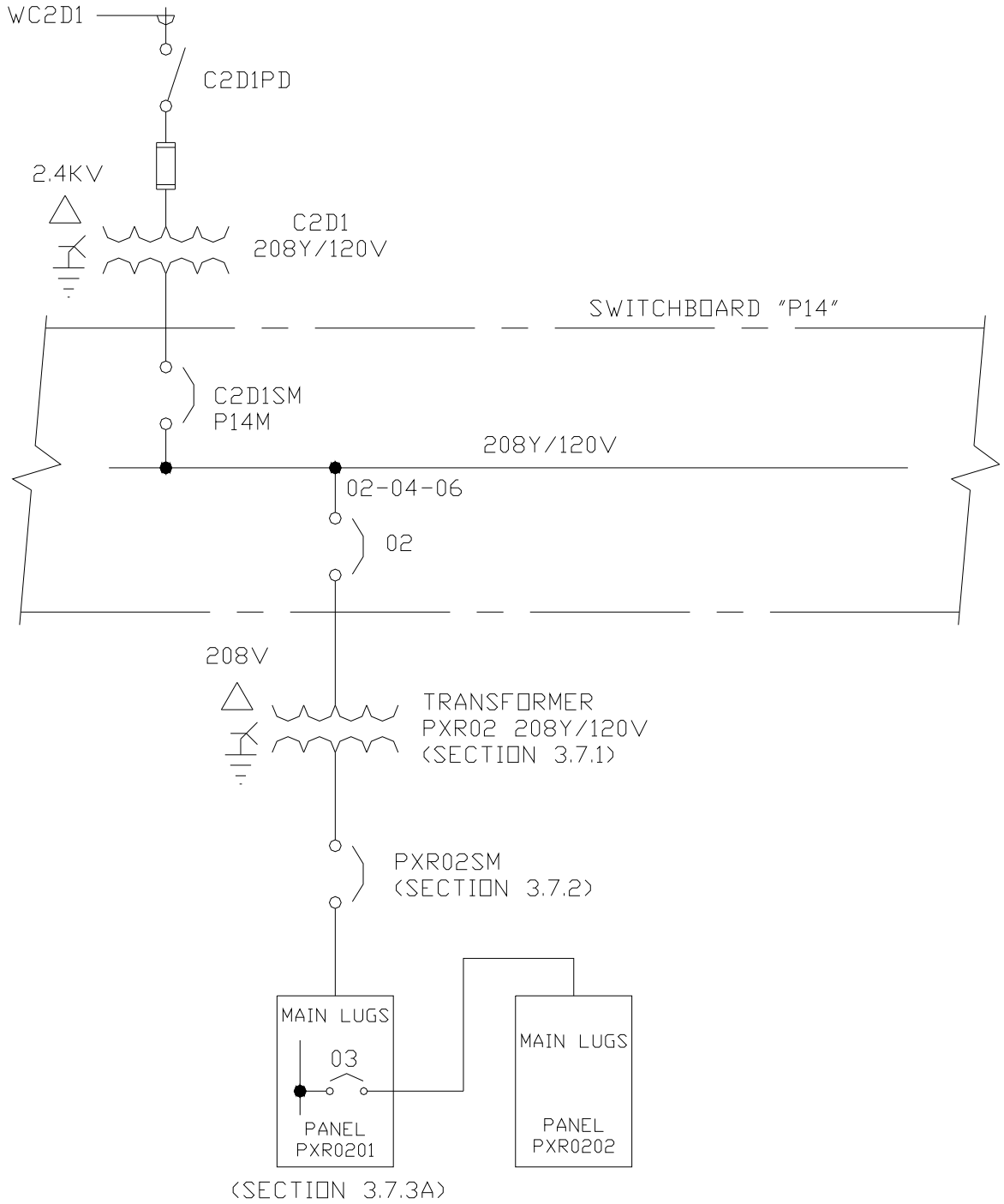

LOW VOLTAGE TRANSFORMER
(SECTION 3.7)
FIGURE 19

3.7.2 LV Transformer Secondary Main Circuit Breaker

The secondary main circuit breaker of a LV transformer can be located in the LV transformer compartment or as a separate device in its own enclosure.

The secondary main circuit breaker of a LV transformer shall be identified with the following characters.

Transformer Name, SM
Where :
Transformer Name is described in Section 3.7.1.
Example : See Figure 19.
PXR02SM : A 208 volt secondary main circuit breaker of transformer PXR02.

3.7.3 Load Fed from a LV Transformer

Load, as referred here, is a panel(s) or motor control center fed from a LV transformer.

A. Single (series) panels fed from a LV transformer secondary shall be identified with the following characters:

Transformer Name, Number (XX)
Where :
Transformer Name is described in Section 3.7.1.
Number (XX) : A panel number; a sequential number starting with the number 01.
NOTE : Panels fed from each transformer shall have their own numbering sequence starting with the number 01.
Example : See Figure 19.
PXR0201 : A 208 volt panel, numbered 01, fed from transformer PXR02.

B. Daisy-chain (parallel) fed panels fed from a LV transformer shall be identified with the following characters:

Transformer Name, Number (XX), Letter
Where:
Transformer Name is described in Section 3.7.1.
Number (XX) : The number assigned to a group of daisy-chained panels; a sequential number starting with 01.
NOTE : Panels fed from each transformer shall have their own numbering sequence starting with the number 01.
Letter : An alphabetical sequence starting with the letter A of a group of daisy-chained panels.
NOTE : The letters F, M, and P shall not be used in this configuration. Each daisy-chained panel group shall have its own alphabetical letter starting with the letter A.

Example	:	See Figure 20, Column A.
PXR0101A	:	The first 208 volt panel, assigned the letter A, of a group of daisy-chained panels, assigned the number 01, fed from transformer PXR01.
PXR0101B	:	The second 208 volt panel, assigned the letter B, of a group of daisy-chained panels, assigned the number 01, fed from transformer PXR01.

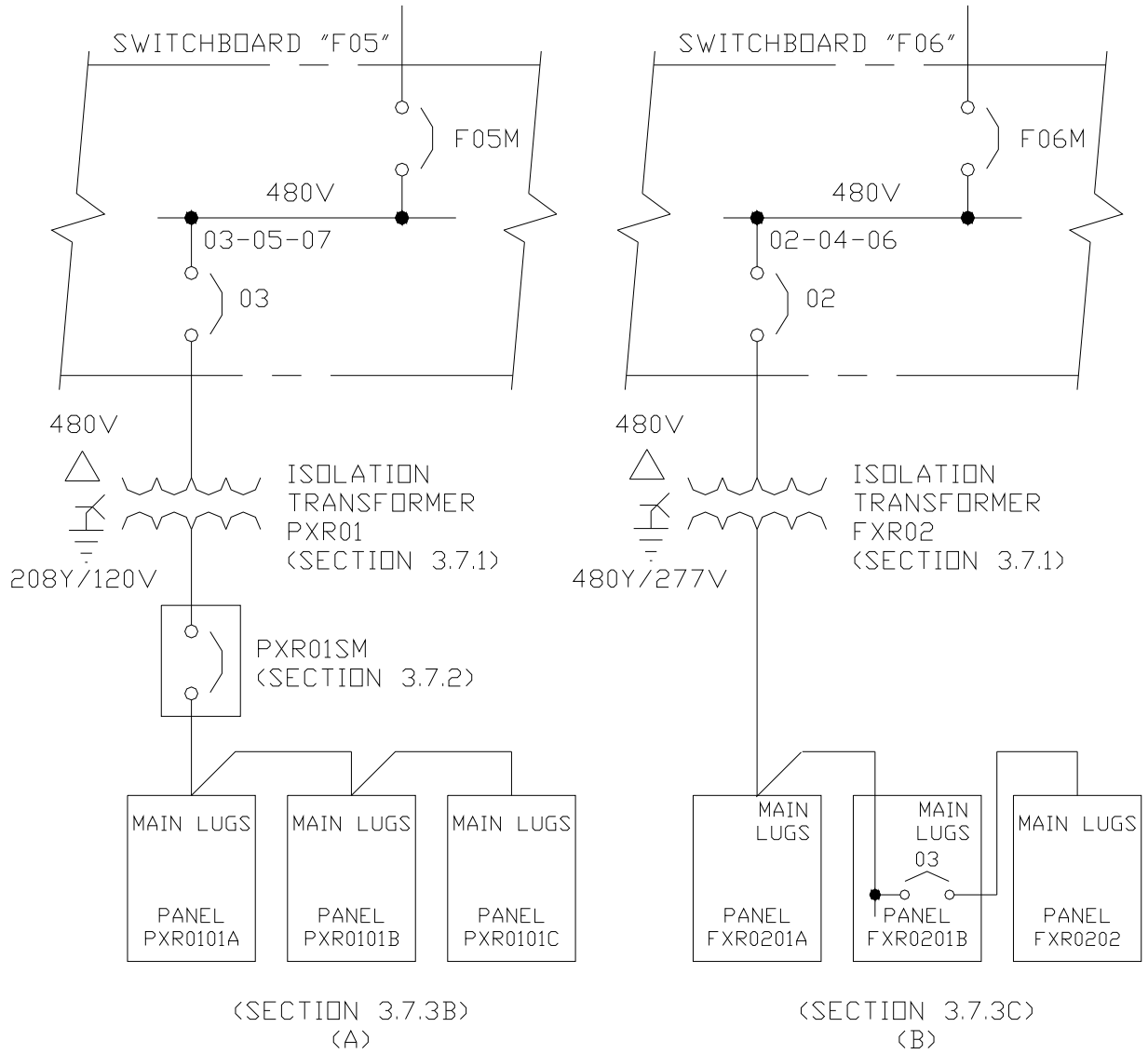

LOW VOLTAGE TRANSFORMER
(SECTION 3.7 CONTINUED)
FIGURE 20

C. When panels are connected in a mixed manner and fed from a LV transformer; panels connected in parallel shall be named by the procedure established in Section 3.7.3B and panels connected in series via circuit breakers shall be named by the procedure established in Section 3.7.3A. See Figure 20, Column B.

D. A motor control center fed from a LV transformer; naming procedure for motor control center is described in Section 3.4.1. See Figure 21.

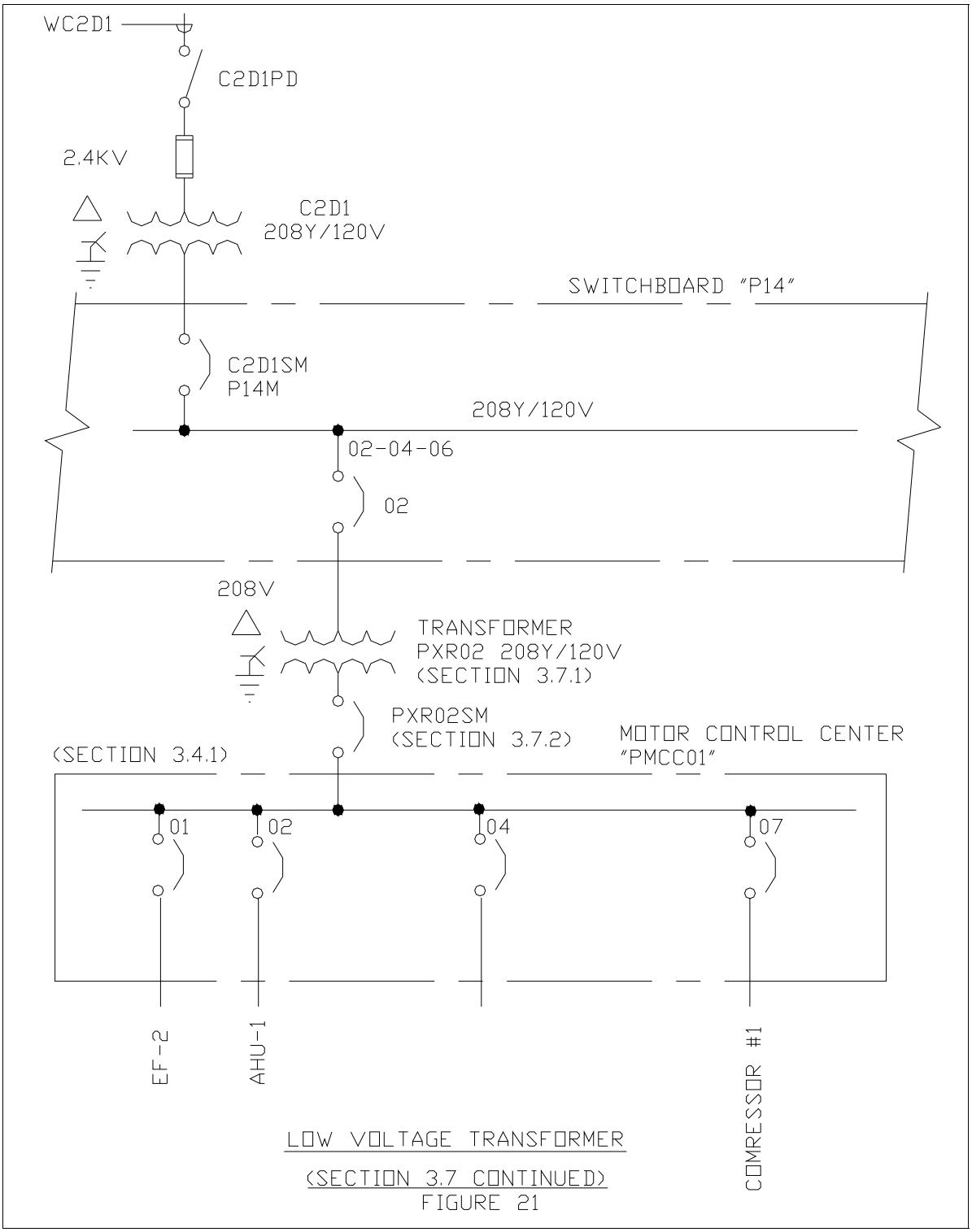

LOW VOLTAGE TRANSFORMER

(SECTION 3.7 CONTINUED)

FIGURE 21

4.0 NAME TAGS STANDARDS

The procedure to place name tags on LV equipment shall be as described in LVEPDS-OI-002, Low Voltage Electrical Power Distribution System Operating Instruction, "Name Tags for Low Voltage Apparatus."

NOTES: Labels shall also be placed on switchboards, motor control centers, transformers, bus ducts, and transfer switches indicating its power source. In the case of transfer switches, the alternate power source shall also be identified in this manner. These labels shall be placed on the outside of the equipment/equipment door.

Panelboards shall be identified with information about the power source inside the panel door, directly above or adjacent the directory card.

When sources are located in a different building, this shall also be identified on the label and the entire device name shall be underlined.

Examples:

Label for a Typical Device:
Fed from F01
Fed from P03 BLDG054

For Transfer Switches:
Figure 17:
Normal Source P13
Alternate Source P14

Figure 18:
Normal Source P01
Alternate Source P07 BLDG106

REFERENCE:

1. Glenn Research Center Organization Procedure, GRC-P7010.002 (latest Revision), Configuration Control of Facilities.
2. HVEPS-OI-006, High Voltage Electric Power System Operating Instructions for "Naming Conventions for Power Apparatus and Cables."
3. LVEPS-OI-002, Low Voltage Electrical Power System Operating Instruction for "Identification Plates for Low Voltage Equipment."

To: Distribution

From: Low Voltage Electrical System Manager

Subject: Operating Instruction: LVEPS-OI-002, Revision 1
Standard for Identification Plates for Low Voltage Equipment Enclosures

The following LVEPS-OI-002, Revision 1, Standard for Identification Plates for Low Voltage Equipment Enclosures, is effective on the date that this document is signed, and replaces the previous version of LVEPS-OI-002, Identification Plates for Low Voltage Equipment, dated December 1, 1999, in its entirety.

6/11/10

Quyen Quach
NASA Glenn Research Center
Low Voltage Electrical System Manager

Date

Concurrence:

6/14/10

Sue Gaudreau
NASA Glenn Research Center
Chair, Electrical Applications Safety Committee

Date

6/16/10

Frank Robinson
NASA Glenn Research Center
Chief, Safety Health and Environmental Division (SHED)

Date

Distribution:
Joe Torri Chief, Systems Management Branch
Sue Gaudreau Chief, Engineering Management Branch
James J. Onest Chief, Operations Management Branch
Gene Stygles Chief, Projects Management Branch
Carmela Freeman, Configuration Control Management
Keith F. Sloan, Call Henry Inc.

1.0 INTRODUCTION

Low voltage equipment enclosures at Glenn Research Center shall be provided with identification plates (nameplates). The purpose of this document is to establish a standard for identification plates for the type of equipment listed in Section 2.0.

2.0 EQUIPMENT COVERED BY THIS OPERATING INSTRUCTION

(1) Switchgears

(2) Switchboards

(3) Panelboards

(4) Motor Control Centers

(5) Distribution Transformers

(6) Transfer Switches

(7) UPS and Generators

(8) Disconnect Switches

(9) Control Panels

(10) Relay Panels

(11) Electrical Cabinets

(12) Motor Starters

(13) Drawout circuit breaker compartments

(14) Motor Control Center compartments

(15) Bus Duct Plug-In Devices

3.0 IDENTIFICATION PLATES

3.1 Identification plates shall be made of engraved laminated phenolic material, with white surface and black core (black lettering on white background). Identification plates 1-1/2 inches high and smaller shall be a minimum of 1/16 inch thick. Plates larger than 1-1/2 inches high shall be a minimum of 1/8 inch.

3.2 Lettering shall be uppercase and shall be centered horizontally and vertically on the identification plate. Use 1/2 inch high lettering for items (1) through (8) in Section 2.0 above. Use 1/4 inch high lettering for items (9) through (15). The space between lines on multiline plates shall be equal to height of letters.

3.3 Identification plates used indoors shall be fastened with appropriate adhesives. Identification plates used outdoors shall be fastened with self-tapping stainless steel screws.

4.0 INSTALLATION

4.1 Designations on the identification plates shall be in accordance with **LVEPS-OI-001, Naming Convention for Low Voltage Panels and Low Voltage Apparatus**. Certain equipment (e.g. motor control center compartments) shall also have the utilization equipment designated on the identification plate.

4.2 Equipment not covered under the naming convention of **LVEPS-OI-001** shall be designated in accordance with applicable construction documents.

4.2 Identification plates shall be affixed at the center top portion of equipment being identified. Surfaces shall be clean and dry prior to application of identification plates.

4.3 Existing identification plates superceded by new plates due to equipment designation change or other factors shall be removed from equipment.

REFERENCE

LVEPS-OI-001 - Naming Convention for Low Voltage Panels and Low Voltage Apparatus.

To: Distribution

From: Low Voltage Electrical System Manager

Subject: Operating Instruction LVEPS-OI-003, Revision 1
Low Voltage Electrical Metering Standard

The following LVEPS-OI-003, Revision 1, Low Voltage Electrical Metering Standard, is effective on the date that this document is signed, and replaces the previous version of LVEPS-OI-003, Low Voltage Metering Standard, dated December 15, 1993, in its entirety.

6/11/10

Quyen Quach
NASA Glenn Research Center
Low Voltage Electrical System Manager

Date

Concurrence:

6/14/10

Sue Gaudreau
NASA Glenn Research Center
Chair, Electrical Applications Safety Committee

Date

6/16/10

Frank Robinson
NASA Glenn Research Center
Chief, Safety Health and Environmental Division (SHED)

Date

Distribution:
Joe Torri Chief, Systems Management Branch
Sue Gaudreau Chief, Engineering Management Branch
James J. Onest Chief, Operations Management Branch
Gene Stygles Chief, Projects Management Branch
Carmela Freeman, Configuration Control Management
Keith F. Sloan, Call Henry Inc.

1.0 INTRODUCTION

EPA Act 2005 requires all Federal buildings to be metered by October 1, 2012, to ensure efficient energy use and reduce the cost of electricity used in Federal facilities. Advanced meters or metering devices must provide data at least daily and measure the consumption of electricity at least hourly. These devices must be used to the maximum extent practicable.

Advanced meters are those that have the capability to measure and record interval data, at least hourly for electricity, and communicate the data to a remote location in a format that can be easily integrated into an advanced metering system. EPA Act Section 103 requires at least daily data collecting capability.

The present IQ meters and IMPACC metering system on the low voltage distribution system at Glenn Research Center at Lewis Field is obsolete. The goal is to utilize an electrical meter that is compatible with the existing Apogee Building Automation System (BAS) such that we can phase out of the existing obsolete IQ and IMPACC metering system.

2.0 GENERAL

The Low Voltage Metering Standard shall be applicable where replacement of existing IQ meters are required in existing low voltage switchboard/switchgear or where new switchboard/switchgear are installed in existing or new building at GRC at Lewis Field.

3.0 PRODUCT AND INSTALLATION

3.1 The low voltage electrical meter shall be compatible with the Apogee BAS and the PXCM Modular Siemens Field Level Controller. It shall be able to communicate with the EMCS (Energy Management Control System) computer at Building 12, Steam Plant Building.

3.2 The meter shall be a Sentron PAC4200 Series meter factory pre-installed in a PAC Series Metering Unit with a Modbus RTU expansion module for remote data transmission, wire duct, terminal blocks, 3-pole 2A breaker, ground terminal, DIN rail, end clamps, shorting terminal block and a control power transformer if required when the control voltage is greater than 240 volts. All required components shall be pre-installed at the factory.

3.3 A current transformer (CT) shall be installed on each of the phase conductors and on the neutral conductor at the incoming service side of the switchboard/switchgear. The current transformer shall be a solid core, round metering grade, 600V with 0.3% accuracy and 5A at the secondary side. Install power wirings to connect these CTs to the Siemens PAC Series Metering Unit. Install power wirings from the incoming service side of the switchboard/switchgear to the 2A circuit breaker in the Siemens PAC Series Metering Unit.

3.4 Install Modbus RS-485 Siemens H-F-1.5TSP24LC-CMP from the Siemens PAC Series Metering Unit to the PXCM Modular Siemens Field Level Controller.

3.5 All power and communication wirings shall be in EMT conduit for indoor application and in RGS conduit for outdoor application or where subject to physical damage.

3.6 Provide programming necessary to enable the electrical meter to communicate with the EMCS (Energy Management Control System) computer at Steam Plant, Building 12.

To: Distribution

From: Low Voltage Electrical System Manager

Subject: Operating Instruction LVEPS-OI-004, Revision 1
Standards for Conduit Installations

The following LVEPS-OI-004, Revision 1, Standards for Conduit Installation, is effective on the date that this document is signed, and replaces the previous version of LVEPS-OI-004, Standards for Conduit Installations, dated April 21, 1995, in its entirety.

Quyen Quach
NASA Glenn Research Center
Low Voltage Electrical System Manager

6/11/10
Date

Concurrence:

Sue Gaudreau
NASA Glenn Research Center
Chair, Electrical Applications Safety Committee

6/14/10
Date

Frank Robinson
NASA Glenn Research Center
Chief, Safety Health and Environmental Division (SHED)

6/16/10
Date

Distribution:
Joe Torri Chief, Systems Management Branch
Sue Gaudreau Chief, Engineering Management Branch
James J. Onest Chief, Operations Management Branch
Gene Stygles Chief, Projects Management Branch
Carmela Freeman, Configuration Control Management
Keith F. Sloan, Call Henry Inc.

1.0 INTRODUCTION

Requirements of this operating instruction shall be followed by the NASA Glenn Research Center (GRC) civil servant and contract personnel. Outside contractors performing on-site tasks will also adhere to the standards and requirements set forth in this document. The need for keeping uniformity in the installation of conduits at the GRC is very important and it is imperative that these requirements be adhered to. This Operating Instruction is intended for all premises wiring (as related to conduit) as defined by the National Electric Code (NEC), NFPA 70. This Operating Instruction does not include wiring associated with test rigs, etc.

2.0 GENERAL

2.1 Definitions

This operating instruction addresses the installation of the following types of conduits:

2.1.1 Rigid Metal Conduit (RGS)

Rigid metal conduit, including couplings, elbows, bends, fittings, and nipples, for use as raceway for wire or cables in an electrical system, shall be galvanized steel.

2.1.2 Intermediate Metal Conduit (IMC)

Intermediate metal conduit, including couplings, elbows, bends, fittings, and nipples, for use as raceway for wire or cables in an electrical system, shall be galvanized steel.

2.1.3 Rigid Nonmetallic Conduit (PVC)

Rigid nonmetallic conduit shall not be lighter than Schedule 40. Rigid nonmetallic conduit shall be the slip-joint solvent-weld type, and all fittings shall be unthreaded and shall be specifically designed for such conduit.

2.1.4 Electrical Metallic Tubing (EMT)

Electrical metallic tubing shall be zinc coated steel. Couplings and connectors shall be zinc die cast.

2.1.5 Flexible Metal Conduit

Flexible metal conduit shall be galvanized steel. Fittings for flexible metal conduit shall be specifically designed for such conduit.

2.1.6 Liquidtight Flexible Metal Conduit

Liquidtight flexible metal conduit shall be a flexible interlocked galvanized steel core extruded with a protective PVC jacket in order to provide wiring protection against moisture, oil, chemicals and corrosive fumes. Fittings for liquidtight flexible metal conduit shall be specifically designed for such conduit.

2.2 Installations

2.2.1 General Requirements

It is the policy of the GRC to implement the requirements outlined in the latest version of the National Electric Code (NEC), NFPA 70, with all installations of

conduit and/or conduit systems with the following specific restrictions and clarifications. Unless otherwise specified, minimum conduit size shall be ¾ inch.

2.2.2 Rigid and Intermediate Metal Conduits (RGS and IMC)

Rigid and Intermediate Metal conduits are considered to be equivalent and may be used interchangeably. The use of rigid metal conduit is permitted in direct burial installations provided that it is PVC coated.

2.2.3 Rigid Nonmetallic Conduit (PVC)

The use of rigid nonmetallic conduit is permitted in underground electrical duct installations provided it is encased in a minimum 3 inch concrete envelope. Rigid nonmetallic conduit Schedule 80 shall be permitted for direct burial applications. The maximum size shall be 1 inch.

Rigid nonmetallic (PVC) conduit shall not be used:

A. Above grade
B. Under areas subject to vehicular traffic unless encased in a minimum 3 inch concrete envelope

Electrical Metallic Tubing (EMT)

Electric metallic tubing shall not be used in the following applications:

A. Outdoors (in areas where it is fully or partially exposed to the weather and on/or within cooling towers)
B. Underground
C. In areas where subjected to severe physical damage such as, where tow motors, overhead cranes and dollies are used on a regular basis

2.2.5 Flexible Metal Conduit, Liquid Flexible Metal Conduit

Flexible metal conduit and liquidtight flexible metal conduits shall not be used in lengths greater than 6 feet (for example, at equipment terminals), except when concealed within walls or under raised floor and flexibility is necessary. The minimum size conduit shall be ½ inch.

To: Distribution

From: Low Voltage Electrical System Manager

Subject: Operating Instruction LVEPS-OI-005, Revision 1
Lighting System Standard

The following LVEPS-OI-005, Revision 1, Lighting System Standard, is effective on the date that this document is signed, and replaces the previous version of LVEPS-OI-005, Fluorescent Lighting Fixture Requirements, dated August 15, 1998, in its entirety.

6/11/10

Quyen Quach
NASA Glenn Research Center
Low Voltage Electrical System Manager

Date

Concurrence:

6/14/10

Sue Gaudreau
NASA Glenn Research Center
Chair, Electrical Applications Safety Committee

Date

6/16/10

Frank Robinson
NASA Glenn Research Center
Chief, Safety Health and Environmental Division (SHED)

Date

Distribution:
Joe Torri Chief, Systems Management Branch
Sue Gaudreau Chief, Engineering Management Branch
James J. Onest Chief, Operations Management Branch
Gene Stygles Chief, Projects Management Branch
Carmela Freeman, Configuration Control Management
Keith F. Sloan, Call Henry Inc.

1.0 GENERAL

This Operating Instruction LVEPS-OI-005 Lighting System Standard will facilitate compliance with the Executive Order on Federal Energy Efficiency in Federal facilities.

This operating instruction shall be applicable to all new installations, rehabilitation and retrofit projects affecting the lighting system at Glenn Research Center.

2.0 PRODUCT

Only ballast and lamp requirements in the lighting systems used at GRC are addressed in this OI. Components such as, fixture type, fixture lens, dimming ballast, bi-level dimming ballast for HID lighting system and etc. shall be included in the design submittal for approval.

2.1 Fluorescent Lighting System

Fluorescent Electronic Ballast:

A. Fluorescent electronic ballast shall comply with the following standards:
   1) Ballast shall be listed with Underwriters Laboratories (UL)
   2) Ballast shall meet the requirements as established by F.C.C. Title 47, Part 18, Subpart C to suppress radio frequency interference (RFI) and electromagnetic interference (EMI)
   3) Ballast shall comply with the I.E.E.E. Standard 587, Category A in order to have the ballast equipped with the appropriate protection to handle surge or transient voltages
   4) Ballast shall meet ANSI Standard C82.11 High Frequency Fluorescent Lamp Ballast Standards and C62.41 Transient Voltage Protection

B. Fluorescent electronic ballast shall meet the following specifications:
   1) Ballast shall a five-year warranty from the date of shipment
   2) Ballast shall be physically interchangeable with a standard electromagnetic and standard electronic ballast
   3) Ballast shall be manufactured in the USA or shall meet the requirements of the North American Free Trade Agreement (NAFTA). Ballast manufacturer shall have a minimum of 5 years of experience in the electronic ballast field
   4) Ballast shall meet the minimum ballast efficacy factor (BEF) as established by the National Appliance Act 100-357
   5) Ballast shall operate lamps at a frequency above 40K Hz and shall operate lamps with less than 3% flicker index
   6) Ballast shall operate from a 60 HZ input source of 120 through 277 volts with +/- 10% variations tolerance
   7) Ballast input current total harmonic distortion (THD) shall be less than 10%
   8) Ballast shall be rated for UL Class P thermal protection and carry an “A” sound rating for quiet operation and shall contain no PCB material
   9) Ballast shall have an input power factor greater than 98% at 120V and greater than 96% at 277V
   10) Ballast shall be capable of starting and maintaining operation at a minimum of 32 degree F
   11) Ballast factor shall be between 0.85 minimum and 1.0 maximum. Ballast shall maintain lamp current crest factor less than 1.7

12) Ballast shall be universal/multi-voltage, programmed rapid-start ballast suitable for parallel operation of two, three or four lamps
13) Ballast for T5 and smaller lamps shall have end-of-life shutdown detection and shutdown circuit

Fluorescent Lamp:

A. Fluorescent T8 lamp linear shape and shall meet the following specifications:
   1) Lamp shall be medium bi-pin type
   2) Lamp shall be 32 watt for 4 ft linear shape lamp and 6 inch wide spacing U shape lamp
   3) Lamp correlated color temperature (CCT) shall be 3500K
   4) Lamp shall have a 85 minimum color rendering index (CRI)
   5) Lamp shall have a 2950 minimum initial lumens for linear shape lamp and a 2800 minimum initial lumens for 6 inch wide spacing U shape lamp
   6) Rated average lamp life at 3 hours per start shall be 36,000 hours minimum for linear shape lamp and 24,000 hours minimum for 6 inch wide spacing U shape lamp
B. Fluorescent T5 lamp shall meet the following specifications:
   1) Lamp shall be mini bi-pin type
   2) Lamp correlated color temperature (CCT) shall be 3500K
   3) Lamp shall have a 85 minimum color rendering index (CRI)
   4) Rated average lamp life at 3 hours per start shall be 25,000 hours minimum

2.2 HIDLighting System

HID Electronic Ballast:

A. HID electronic ballast shall comply with the following standards:
   1) Ballast shall be listed with Underwriters Laboratories (UL)
   2) Ballast shall meet the requirements as established by F.C.C. Title 47, Part 18, for Non-Consumer equipment
   3) Ballast shall meet C62.41 Transient Voltage Protection
B. HID electronic ballast shall meet the following specifications:
   1) Ballast shall a five-year warranty from the date of shipment
   2) Ballast shall be manufactured in the USA or shall meet the requirements of the North American Free Trade Agreement (NAFTA). Ballast manufacturer shall have a minimum of 5 years of experience in the electronic ballast field
   3) Ballast shall be capable of starting and maintaining operation at a minimum of zero degree F for indoor application and a minimum of -20 degree F for outdoor application
   4) Ballast shall operate from a 60 HZ input source of 120 through 277 volts with +/- 10% variations tolerance
   5) Ballast input current total harmonic distortion (THD) shall be less than 15%
   6) Ballast shall be rated for UL Class P thermal protection and carry an “A” sound rating for quiet operation and shall contain no PCB material
   7) Ballast shall have an input power factor greater than 90%
   8) Ballast shall maintain lamp current crest factor less than 1.5
   9) Ballast shall be thermally protected to shut off when operating temperature reach

UL maximum limits

10) Ballast shall have a lamp end of life detection and shutdown circuit
11) Ballast used in greater than 150W metal halide system shall be warranted for use with pulse-start metal halide lamp

HID Lamp:

A. HID lamp shall meet the following specifications:
   1) Lamp shall be metal halide
   2) Lamp greater than 150 watts shall be pulse start type

2.3 Recess Downlight Lighting System

Recess downlight lighting system shall be compact fluorescent type with compact fluorescent lamp and electronic compact fluorescent ballast (or compact fluorescent dimming electronic ballast where applicable).

Electronic Compact Fluorescent Ballast:

A. Electronic Compact fluorescent ballast shall comply with the following standards:
   1) Ballast shall be listed with Underwriters Laboratories (UL)
   2) Ballast shall meet the requirements as established by F.C.C. Title 47, Part 18, Subpart C to suppress radio frequency interference (RFI) and electromagnetic interference (EMI)
   3) Ballast shall comply with the I.E.E.E. Standard 587, Category A in order to have the ballast equipped with the appropriate protection to handle surge or transient voltages
   4) Ballast shall meet ANSI C82.11 and ANSI C62.41 Transient Voltage Protection

B. Electronic compact fluorescent ballast shall meet the following specifications:
   1) Ballast shall a five-year warranty from the date of shipment
   2) Ballast shall be manufactured in the USA or shall meet the requirements of the North American Free Trade Agreement (NAFTA). Ballast manufacturer shall have a minimum of 5 years of experience in the electronic ballast field
   3) Ballast shall meet the minimum ballast efficacy factor (BEF) as established by the National Appliance Act 100-357
   4) Ballast shall operate lamps at a frequency above 50K Hz and shall operate lamps with less than 3% flicker index
   5) Ballast shall operate from a 60 HZ input source of 120 through 277 volts with +/- 10% variations tolerance
   6) Ballast input current total harmonic distortion (THD) shall be less than 10%
   7) Ballast shall be rated for UL Class P thermal protection and carry an “A” sound rating for quiet operation and shall contain no PCB material
   8) Ballast shall have an input power factor greater than 98% for the primary voltage
   9) Ballast shall be capable of starting and maintaining operation at a minimum of zero degree F and shall tolerate operation in ambient temperature up to 140 degree F without damage
   10) Ballast shall maintain lamp current crest factor less than 1.7
   11) Ballast shall be universal/multi-voltage, programmed rapid-start
   5) Ballast shall have end-of-life shutdown detection and shutdown circuit

Compact Fluorescent Lamp:

A. Compact fluorescent lamp shall meet the following specifications:
   1) Lamp shall be 4-pin, triple lamp type
   2) Lamp correlated color temperature (CCT) shall be 3500K
   3) Lamp shall have a 82 minimum color rendering index (CRI)
   4) Rated average lamp life shall be 12,000 hours minimum

2.4 LED Lighting System

LED lighting technologies are still in their infancy. The technologies are rapidly progressing and continuously evolving. Therefore, a standard for this type of lighting system cannot be established yet. Currently, there are several LED pilot projects implemented at GRC such that we can evaluate this new lighting system. So far, feedback from these projects indicates that people prefer lamps with correlated color temperature of/near 3500K.

To: Distribution

From: Low Voltage Electrical System Manager

Subject: Operating Instruction LVEPS-OI-006, Revision 3
Occupancy Sensor Requirements

The following LVEPS-OI-006, Revision 3, Occupancy Sensor Requirements, is effective on the date that this document is signed, and replaces the previous version of LVEPS-OI-006, Rev. B Occupancy Sensor Requirements, in its entirety.

6/11/10

Quyen Quach
NASA Glenn Research Center
Low Voltage Electrical System Manager

Date

Concurrence:

6/14/10

Sue Gaudreau
NASA Glenn Research Center
Chair, Electrical Applications Safety Committee

Date

6/16/10

Frank Robinson
NASA Glenn Research Center
Chief, Safety Health and Environmental Division (SHED)

Date

1

1

Distribution:
Joe Torri Chief, Systems Management Branch
Sue Gaudreau Chief, Engineering Management Branch
James J. Onest Chief, Operations Management Branch
Gene Stygles Chief, Projects Management Branch
Carmela Freeman, Configuration Control Management
Keith F. Sloan, Call Henry Inc.

1.0 INTRODUCTION

The Executive Order on Federal Energy Management directs all Federal agencies to reduce overall energy consumption. The best way to reduce lighting energy consumption is to turn off lights whenever a room or space is unoccupied by using lighting control equipment. This will reduce overall energy use per gross square foot. Lighting control equipment shall include: power packs, dimming ballasts, occupancy sensors, HID bi-level controller, photocells, timers, daylight sensors and daylight harvesting.
This Occupancy Sensor Operating Instruction shall be applicable to new installation, rehabilitation and retrofitting projects that requires updating the lighting system at the Glenn Research Center.

2.0 PRODUCTS

2.1 Products supplied shall be from a manufacturer that has been continuously involved in the manufacturing of occupancy sensors for a minimum of five (5) years.

2.2 All components shall be U.L. listed, shall meet all state and local applicable code requirements and shall offer a five (5) year warranty minimum.

2.3 Lighting control equipment shall be designed to operate on the voltage indicated. Sensors and power packs shall have circuitry that only allows load switching at or near zero current crossing of supply voltage. Sensor shall have an LED occupant detection indicator. Sensor shall have adjustable sensitivity and adjustable delayed-off time range of 30 seconds to 15 minutes, minimum. Wall mounted sensors shall match the color of adjacent wall plates. Ceiling mounted sensors shall be white. Ceiling mounted sensors shall have 360 degree coverage unless otherwise indicated.

2.3.1 Ultrasonic sensor shall be crystal controlled and shall not cause detection interference between adjacent sensors.

2.3.2 Ultrasonic/Infrared Combination Sensor Occupancy detection to turn lights on requires both ultrasonic and infrared sensor detection. Lights shall remain on if either the ultrasonic or infrared sensor detects movement. Infrared sensor shall have lens selected for indicated usage and daylight filter to prevent short wavelength infrared interference. Ultrasonic sensor frequency shall be crystal controlled.

3.0 APPLICATION

Note: Most occupancy sensor manufacturers offer design services for their products.

3.1 Lighting control equipment shall be used in offices, conference rooms, classrooms, hallways, restrooms, warehouses, storage rooms and building exterior lighting. They shall not be used in areas where their applications are determined to jeopardize personnel safety. Such areas include but are not limited to: equipment rooms, laboratories, and maintenance and shop areas.

Typical sensor applications are:

Ultrasonic – Restrooms, hallways, warehouses, storage rooms and offices

Combination sensor – Classrooms and conference rooms.

Dimmers in conjunction with lighting control sensor(s) shall be used in conference rooms and classrooms. In areas where there are dimming circuits, lighting control sensors and dimming ballasts of the dimming circuits have to be compatible for them to operate properly together.

Wall switch replacement type lighting control sensors shall not be used.

Occupancy sensors may be used with High Intensity Discharge (HID) fixtures by integrating HID bi-level controllers into the lighting system.

3.2 In areas where there are existing or new light switches, occupancy sensors shall be wired such that the controlled light fixtures can be turned on/off manually via wall light switches. In addition, power packs and occupancy sensors shall be installed on the line side of the room wall switch. All occupancy sensor related wiring shall be in conduit except for 24V (or less) wiring where concealed in wall or above ceilings.

3.3 Provide sensor unit(s) to give full coverage over controlled area. Full coverage shall provide hand and arm motion detection for office and administration type areas and walking motion for industrial areas, warehouses, storage rooms and hallways. Mount the sensor(s) as indicated and in accordance with the manufacturer's recommendations to maximize energy savings and to avoid nuisance activation and deactivation due to sudden temperature or airflow changes and usage. Set sensor "on" duration to 15 minutes.

3.4 Upon completion of installation, conduct an operating test to show that equipment operates in accordance with requirements. Test sensors for proper operation. Observe for light control over entire area being covered.

To: Distribution

From: Low Voltage Electrical System Manager

Subject: Operating Instruction LVEPS-OI-007, Revision 1
The Use of Flat Conductor Cable

The following Operating Instruction LVEPS-OI-007, Revision 1, The Use of Flat Conductor Cable is effective on the date that this document is signed, and replaces the previous version of LVEPS-OI-007, The Use of Flat Conductor Cable, dated 11/20/2000, in its entirety.

6/11/10

Quyen Quach
NASA Glenn Research Center
Low Voltage Electrical System Manager

Date

Concurrence:

6/14/10

Sue Gaudreau
NASA Glenn Research Center
Chair, Electrical Applications Safety Committee

Date

6/16/10

Frank Robinson
NASA Glenn Research Center
Chief, Safety Health and Environmental Division (SHED)

Date

Distribution:
Joe Torri Chief, Systems Management Branch
Sue Gaudreau Chief, Engineering Management Branch
James J. Onest Chief, Operations Management Branch
Gene Stygles Chief, Projects Management Branch
Carmela Freeman, Configuration Control Management
Keith F. Sloan, Call Henry Inc.

THE USE OF FLAT CONDUCTOR CABLE

This operating instruction describes the permissible uses of Flat Conductor Cable (FCC), also known as undercarpet cable, at NASA Glenn Research Center. This operating instruction also mandates the use of the Facility Change Request process whenever FCC is intended for use.

1.0 GENERAL INTENT

FCC is generally **not** recommended for use. However, exceptions can be permitted provided the intended use complies with the conditions of section 2.0 below and written approval is obtained from the Low Voltage Electrical System Manager prior to installation.

2.0 THE USE OF FCC CABLE WILL BE PERMITTED UNDER THE FOLLOWING CONDITIONS:

2.1 The installation complies with the current NFPA 70, National Electrical Code Article 324 Part II.

2.2 The construction of the FCC system (cable, shields, connectors, etc.) complies with the current NFPA 70, National Electrical Code Article 324 Part III

3.0 ALL PROPOSED FCC INSTALLATIONS SHALL BE DOCUMENTED AND SUBMITTED, PRIOR TO INSTALLATION, AS A FACILITY CHANGE REQUEST (NASA FORM C – 29)

4.0 EXPLANATORY COMMENTS:

The intent of using FCC is to provide a clean and relatively in-expensive approach to providing power and data to locations away from walls when it is impractical to disturb nearby spaces, such as ceilings below. For example, bringing power and data to a conference room table that host's computer and video equipment. When nearby spaces are not under construction it can be very difficult to accomplish this and only under such a condition would FCC be considered.

To: Distribution

From: Low Voltage Electrical System Manager

Subject: Operating Instruction: LVEPS-OI-008, Revision 1
Work On or Near Low Voltage Electrical Systems

The following Operating Instruction LVEPS-OI-008, Revision 1, Work On or Near Low Voltage Electrical Systems is effective on the date that this document is signed, and replaces the previous version of LVEPS-OI-008, Work On or Near Low Voltage Electrical Systems, dated 9/1/2003, in its entirety.

6/11/10

Quyen Quach
NASA Glenn Research Center
Low Voltage Electrical System Manager

Date

Concurrence:

6/14/10

Sue Gaudreau
NASA Glenn Research Center
Chair, Electrical Applications Safety Committee

Date

6/16/10

Frank Robinson
NASA Glenn Research Center
Chief, Safety Health and Environmental Division (SHED)

Date

1

Distribution:
Joe Torri Chief, Systems Management Branch
Sue Gaudreau Chief, Engineering Management Branch
James J. Onest Chief, Operations Management Branch
Gene Stygles Chief, Projects Management Branch
Carmela Freeman, Configuration Control Management
Keith F. Sloan, Call Henry Inc.

2

1.0 INTRODUCTION

Low voltage electrical equipment must periodically be maintained, tested, and repaired. The purpose of this document is to establish the minimum standard work practices required to work on or near low voltage equipment at the Glenn Research Center (GRC). Low voltage is considered to be 600 volts or less. As a rule, GRC does not allow work on energized electrical systems. Exceptions are provided for specific tasks allowed in NFPA 70E, Standard for Electrical Safety in the Workplace (Reference 2), Article 130. The GRC Low Voltage Electrical System Manager may concur with other exceptions to this policy after careful review of the situation and hazards involved. Such decisions shall be documented and approved using an Energized Electrical Work Permit (NASA C-780 Form)
All employees and contract personnel at GRC shall consider all low voltage systems, power apparatus and cables energized until they personally verify that the circuit or equipment they are about to work on or near is de-energized. This verification shall be by direct test and visual observation of electrical opens, such as open circuit breakers and open disconnect switches. This Operating Instruction addresses only the electrical hazards associated with working on or near low voltage equipment. There may be other hazards, such as fall or spill hazards, to consider and consequently additional precautions to be taken which may not be covered in this document.

Minimum safety rules for safeguarding employees during the installation, operation or maintenance of low voltage electric equipment are established by the NASA Glenn Safety Manual (GSM) (Reference 1) Chapter 8, Electrical System Safety, based on the requirements of NFPA 70E, Standard for Electrical Safety in the Workplace.

2.0 GENERAL REQUIREMENTS FOR ISOLATING LOW VOLTAGE APPARATUS

2.1 In accordance with the GSM, Chapter 8, low voltage equipment shall be de-energized prior to performing work on the equipment. Equipment located nearby may also be required to be de-energized if there is a potential for contacting energized components or work is being accomplished within the Limited Approach Boundary.

The general requirement for working on low voltage power apparatus such as transformers, breakers, panelboards, cables and accessories shall be to provide **one electrical open** on all sources of potentials **including backfeeds and potential transformers**.

All electrical opens shall be accordance with current NASA GRC Lock-Out/Tag-Out Program requirements.

2.2 Waivers and Deviations

If waivers or deviations are required to this Operating Instruction due to unique circumstances, the request shall be submitted in writing to the Low Voltage Electrical System Manager. The request shall include justification of why the waiver is being requested, how the work will be performed, and all the relevant drawings, documents, and pictures to substantiate the request. The nature of the request may require a committee

review and therefore requests should be submitted in a timely fashion.

Note: Convenience and/or cost savings are not justification for a waiver/deviation.

3.0 PERFORMING WORK NEAR/APPROACH DISTANCE TO ENERGIZED PARTS

3.1 Qualified Persons Directly Working on the Task

For voltages above 50 volts, qualified persons, as defined by the Standard for Electrical Safety in the Workplace (NFPA 70E), who are directly involved in the work being performed shall not be permitted to approach or take any conductive object closer than the Restricted Approach Boundary set forth in NFPA 70E Article 130.2 (C). Tools used are considered to be an extension of the person's body. For voltages 50 volts and below, Approach Boundaries are not specified but contact with exposed parts should be avoided.

The qualified person(s) performing the task are responsible for establishing a safe work zone and for making unqualified persons aware of the electrical hazard and keeping them outside the stated approach distances by means of appropriate warning signs, warning tapes, cones, etc.

In addition, the qualified person(s) working on the task shall not approach any conductive object closer than 3 feet 6 inches without appropriate Personal Protective Equipment, PPE.

Requirements for PPE are established by the NASA GSM Chapters 8 and 15 and NFPA – 70E, Chapters 2 and 3.

3.2 Unqualified Persons and Those Not Directly Working on the Task

For voltages above 50 volts, unqualified persons or qualified persons not directly involved in the task shall not be permitted to approach closer than the Limited Approach Boundary, 10 feet to an exposed moveable conductor and 3 feet 6 inches to an exposed fixed conductor.

Where there is a need for an unqualified person(s) to cross the Limited Approach Boundary, a qualified person shall advise them of the possible hazards and continually escort the unqualified person(s). Under no circumstance shall the unqualified person(s) be permitted to cross the Restricted Approach Boundary. For voltages 50 volts and below, Approach Boundaries are not specified but contact with exposed parts should be avoided.

4.0 SPECIAL CASES

There are cases when equipment cannot be de-energized prior to performing the required task. These cases and the appropriate procedures are discussed in this section.

4.1 Performing Testing and Troubleshooting

At times circuits must remain energized while performing testing and troubleshooting

functions. Testing or troubleshooting is defined as the act of verifying circuit parameters in order to diagnose a malfunctioning system or component. It is **not** the act of replacing parts or tightening connections etc. to correct a malfunction. Replacing or installing parts, tightening connections and other similar acts are only to be accomplished once the circuit is properly de-energized.

Test instruments are commonly used for verifying the absence or presence of proper voltage and current levels and for obtaining other diagnostic information. The following requirements apply to test equipment.

1) Consider voltage testing instruments as personal safety equipment rather than tools. These instruments are used to determine whether or not a conductor is lethal or safe to touch. Treating them as safety equipment implies a higher level of attention and control.
2) Only use meters that are rated for industrial applications.
3) Never use a damaged test lead or meter. Inspect leads for insulation damage or exposed metal before use.
4) Use leads with shrouded connectors and finger guards and meters with recessed jacks.
5) **Always** test the meter on a known energized circuit both before and after making voltage checks to verify proper meter performance.
6) When using voltmeters and ammeters to verify operation of an energized circuit wear insulated gloves. Voltage-rated rubber gloves provide protection from hand contact with an energized source and are available in various voltage classes.

4.2 Fuse Replacement

Replacement of fuses may be accomplished once the fuse is disconnected from all sources of electrical energy or when the fuse can be **conveniently** removed by means of insulating handles (pullers) rated for the proper voltage. Fuses are not to be replaced under load.

4.3 Work on Battery Systems

The nature of batteries is such that they cannot be shut off therefore special care and handling is required to perform installation, maintenance or testing. Electrically connecting the two posts together on a battery, or the wrong posts on multiple batteries, can cause a high-current short circuit. These high current levels can cause serious burns, and perhaps cause the battery to rupture or explode which may result in severe injury and possibly death. These hazards can be eliminated by not allowing any metal or conductive materials to contact the battery posts, or connecting hardware. Therefore the following precautions shall be taken when working on or near battery systems:

1) Remove all watches, metal jewelry, metal framed glasses and any other

conductive article that may inadvertently contact battery terminals.

2) Any tools (wrenches for tightening connections, funnels for water addition, etc.) used shall be either small enough that they cannot contact two conductive surfaces at once, or insulated for use on energized equipment up to 1000V.
3) Do not smoke or have any other flames or sparks near the batteries.
4) Wear appropriate safety clothing, including safety glasses.

Refer to Reference 1 for other possible precautions and considerations.

4.4 Other Electrical Potential-Energy Storage Systems

4.4.1 Solar Cells

Prior to installing or servicing a solar cell(s) shall be covered with an opaque cover such as black plastic sheeting or cardboard to minimize output current and voltage. After covering the respective cell(s), the output of the cell(s) shall be shorted. The shorting conductor shall have a rated ampacity greater than the output of the cell(s) being worked on or near. The tools and PPE used in the shorting operation shall be rated for the greatest voltage that may be encountered.

4.4.2 Capacitors

A charged capacitor is another source of potential energy that cannot be turned off. Prior to installing, maintaining or servicing a capacitor(s) it shall be discharged and after discharging made safe by shorting the terminals. Refer to procedures described in the Glenn Safety Manual (Reference 1) Chapter 8 for specific requirements.

When a particular case is not covered by this document, the required task along with a detailed description of the equipment and conditions shall be submitted to the Low Voltage Electrical System Manager for evaluation.

REFERENCES:

1. NASA Glenn Safety Manual (GSM)
2. NFPA 70E, Standard for Electrical Safety Requirements for Employee Workplaces, latest edition

LVEPS-OI-009
11/14/2007

TO: Distribution

FROM: Quyen Quach, Low Voltage Electrical System Manager

SUBJECT: Operating Instruction: LVEPS-OI-009
Low Voltage Electrical System Switching

The following Operating Instruction, LVEPS-OI-009, *Low Voltage Electrical System Switching*, is effective on the date that this document is signed.

Quyen Quach
NASA Glenn Research Center
Low Voltage Electrical System Manager

11/14/2007
Date

Concurrence:

Sue Gaudreau Chairperson,
Electrical Application Safety Committee

11/14/07
Date

Christine Greenwalt Acting Chief, Glenn Safety Office

11/16/07
Date

LVEPS-O1-009
11/14/2007

Distribution:
Joe Torri Chief, Systems Management Branch
Renee Paylo Chief, Engineering Management Branch
Jim Onest Chief, Operations Management Branch
Gene Stygles Chief, Project Management Branch

LVEPS-OI-009
11/14/2007

The purpose of this document is to establish the policy on low voltage electrical system switching at the NASA Glenn Research Center (GRC). Low voltage is considered to be 600Vac RMS or 600Vdc or less.

1. Switching of a low voltage main circuit breaker or tie circuit breaker shall be done by a qualified journeyman who shall be a GRC Building Electrician, a Call Henry Inc. (CHI) electrician or a Manthia Technologies Inc. (MTI) electrician. The electrical switching process shall require the Low Voltage Electrical System Manager's name on the LO/TO tag.

2. For all new low voltage installations, all required test results shall be sent to the Low Voltage Electrical System Manager for final approval before the LO/TO tag can be removed. When the low voltage work is completed, notify the Low Voltage Electrical System Manager and Low Voltage Electrical Facility Manager for a final walk-thru of the work.

3. Switching a branch circuit breaker can be done by a qualified contractor journeyman electrician provided that the electrician successfully completed GRC's LO/TO training.

4. The Contractor shall notify the Building Manager of any electrical work that is going in his/her building.

If a waiver or deviation is required to this Operating Instruction due to unique circumstances, the Contractor shall submit the request in writing to the Low Voltage Electrical System Manager. The request shall include justification of why the waiver is being sought, how the work will be performed, and all the relevant drawings, documents, and pictures to substantiate the request. The nature of the request may require a committee review and therefore requests should be submitted in a timely fashion.

Note: Convenience and/or cost savings are not justification for a waiver/deviation.