HVEPS-OI-01
Revision: March 7, 2001

TO: Distribution

FROM: 7521, Systems Management and Maintenance Branch, Glenn Research Center High Voltage Electrical Power System Manager

SUBJECT: High Voltage Electric Power System
Operating Instruction: HVEPS-OI-01
Procedures to Implement Technical Policies and Instructions

The following High Voltage Electric Power System Operating Instruction, HVEPS-OI-01, *Procedures to Implement Technical Policies and Instructions*, dated 3/7/01 replaces the previous version of HVEP-OI-1, dated May 30, 1990, in it's entirety.

Louis F. Bernhardt (original signed)
Glenn Research Center
High Voltage Electrical
Power System Manager

Concurrence:

(original signed)
_____
Robert M. Suhay
Chairman, Electrical Applications Safety Committee

(original signed)
_____
Manuel Dominguez
Chief, Glenn Safety Office

Procedures to Implement Technical Policies and Instructions

CONTENTS

1.0 Responsibility for the Preparation of Technical Policies and Operating Instructions ……..3

2.0 Technical Policies …….…….3

3.0 Operating Instructions …….…..3

4.0 Implementation Procedure …….……4

5.0 Temporary Waiver …….5

6.0 Amendments……...5

7.0 Notes ……..6

HVEPS-OI-01

Procedures to Implement Technical Policies and Instructions

1.0 Responsibility for the Preparation of Technical Policies and Operating Instructions

The Glenn Research Center High Voltage Electrical Power System Manager has the responsibility of overseeing the issuance of technical policies and operating instructions for all activities associated with maintenance, construction, and operation of GRC High Voltage Electric Power Systems over 600 volts at Plum Brook Station and Lewis Field sites. These policies and instructions are implemented through the generation and publication of GRC High Voltage Electric Power System Operating Instructions (HVEPS-OI's) and High Voltage Electrical Power System Engineering Design Guidelines.

The appropriate Area Safety Committee oversees the issuing of technical policies and operating instructions for all designated Research Systems.

2.0 Technical Policies

Technical policies include policies for selection, installation, maintenance, repair and testing of materials and equipment for high voltage facilities in use within or proposed for, the high voltage electric power system at GRC. These policies are based on sound engineering and technical practices and standards, tempered by the actual field experience encountered over the historical life of GRC High Voltage Power Systems. Examples of these policies/guidelines include the selection of copper versus aluminum current carrying parts; 46kV versus 34.5kV insulation levels for power cables smaller than 750kCMIL; and acceptance tests for power transformers or cables.

These technical policies will be incorporated into High Voltage Electrical Power System Engineering Design Guidelines and may not necessarily be made part of an HVEPS-OI.

3.0 Operating Instructions

Operating Instructions include policies governing the operation of the high voltage system as well as policies involving safety considerations for people and equipment who/which come into association with high voltage electric power systems and associated subsystems. Examples of these include policies associated with cable cutting; working in power manholes and electric cable tunnels; working on or near electrical equipment; and using specific emergency tie circuits.

4.0 Implementation Procedure

The creation or revision of policies or operating instructions shall be implemented in the following manner:

a) New policies or revisions to existing policies or guidelines are primarily generated by the GRC High Voltage Electrical Power System Manager. Revisions to or recommendations for new policies or guidelines can also be drafted by GRC civil servant or contractor personnel and will be taken under consideration for implementation.

b) A review of proposed recommendations or revisions will be made by the GRC High Voltage Electrical Power System Manager, in consultation with (as deemed appropriate):

1. the GRC Electrical Applications Safety Committee Chairman and/or Safety Committee members
2. the Glenn Safety Office
3. the Electrical Power Systems Tactical Committee (which is comprised of representatives from the Central Process Systems Operations Branch, the Systems Management and Maintenance Branch, the Facilities Engineering and Architectural Branch, the Construction Management Branch, and the Central Process Systems Engineering and Maintenance Branch)
4. other GRC, Plumbrook or Lewis Field, System, Building, Program, Project, or area managers
5. industry

c) Upon reaching a consensus concerning the merits of pursuing the recommendations, the GRC High Voltage Electrical Power System Manager then will:

1. If a guideline, compose the new guideline and have it incorporated into the Facilities Engineering, Electrical Engineering Design Guidelines.
2. If a policy, prepare a draft High Voltage Electrical Power System Operating Instruction (HVEPS-OI) to be sent out for review.
3. Have the draft HVEPS-OI reviewed by the Electrical Power Systems Tactical Committee, and the Electrical Applications Safety Committee.
4. Incorporate any final changes to the draft, sign and then send it for concurrence from the Chairman of the Electrical Applications Safety Committee and the Chief of the Glenn Safety Office.

5. Issue the signed, revised or new HVEPS-OI.

5.0 Temporary Waiver

Due to the complexity of electrical power systems, unique circumstances may dictate that a temporary deviation from the written HVEPS-OI's may be warranted. Requests for deviations will be reviewed on a case-by-case basis. A review will be initiated by submitting a written request by the responsible person (i.e. Project Manager, Contract CO or COTR, Project Engineer, etc) to the GRC High Voltage Electrical Power System Manager. The request shall include a description of the unique circumstance; the rationale for the waiver; the duration the waiver is requested to be in effect; and the proposed physical precautions and/or procedures to be implemented to mitigate any risk which may result from deviating from the HVEPS-OI. A request that is based **solely** on **cost impact considerations** **shall not** be considered for the granting of a waiver.

The GRC High Voltage Electrical Power System Manager will review the request, as to the unique circumstances, which require a waiver to the HVEPS-OI, in consultation with (as deemed appropriate):

a) the GRC Electrical Applications Safety Committee Chairman and/or Safety Committee members
b) the Glenn Safety Office
c) the Electrical Power Systems Tactical Committee

Based on the result of the consultations a temporary waiver may be granted. If granted, the GRC High Voltage Electrical Power System Manager will send the waiver to the requestor with copies going to the GRC Electrical Applications Safety Committee Chairman, to the GRC designated safety person for inclusion to the site EASC permit, to the Electric Power Dispatch Office, and to the Chief of the Glenn Safety Office. The requestor has the responsibility for ensuring that the conditions delineated on the waiver are executed.

Any violation of the conditions that may be placed on the waiver, or any deviation from the proposed physical precautions and/or procedures to be implemented to mitigate any risk associated with the waiver, is sufficient reason to have the waiver immediately revoked and is sufficient reason to establish cause for not granting any future waivers to the requestor and/or the requestor's organization.

6.0 Amendments

An amendment to an HVEPS-OI can be temporarily initiated and implemented through the issuance of that amendment with the verbal concurrence of the Chairman of the GRC Electrical Applications Safety Committee and at the discretion of the GRC High Voltage Electric Power System Manager. The GRC High Voltage Electric Power System Manager

will follow up (within 30 days) on the permanent issuing of the amendment with a formal review of the amendment as listed in Part 4.0. Amendments, which are considered to be minor, will not require a formal revision of the HVEPS-OI. The GRC High Voltage Electric Power System Manager makes this determination with the concurrence of the Chairman of the GRC Electrical Applications Safety Committee.

7.0 Notes

A. It is not the intent of any of the technical policies or operating instructions, formulated by the HVEPS-OI's, to lessen the requirements imposed by applicable IEEE, ANSI, NEMA, OSHA, NESC, or NEC standards. Rather, the technical policies or operating instructions formulated may impose more stringent conditions or may provide site-specific clarification or preferences.

B. With regard to GRC contracts, the HVEP-OI's are incorporated into the contracts 'by reference' as being part of the GRC Safety Manual identified in the contract's Safety and Health clause. The complete text associated with the OI's can be supplied to the contractor, upon his request of that particular contract's GRC Contracting Officer. The HVEPS-OI's will also be made available, electronically over the Internet, via links within the online version of the Glenn Research Center Safety Manual.

7340 June 1, 1990
HVEPS-OI-002

TO: 0153/Chief, Safety Assurance Office
Attn: D. B. Ercegovic

FROM: 7340/Chief, Electrical Power Systems Branch

SUBJECT: High Voltage Electric Power System
Operating Instruction - 002:
Compliance with OSHA 29CFR1910.147 Lockout/Tagout
Inspection/Audit

OSHA 29CFR1910.147 Part (c)(6), Periodic Inspection, requires LeRC to annually conduct periodic inspections of lockout/tag-out procedures to isolate high voltage facilities.

To comply with this part, the assistance of your office is requested to periodically inspect procedures to lockout/tagout high voltage facilities.

Due to the complexity of the high voltage electric power system, switching orders to lockout/tagout high voltage facilities are seldom the same. The operating configuration of the high voltage system is dynamic. Each switching order, therefor, is individually written by an Electric Power Dispatcher and reviewed by another Electric Power Dispatcher or supervisor before the switching order is implemented.

It is virtually impossible to audit each switching order in the high voltage electric power system. Thus I recommend that the Safety Assurance Office conduct random unannounced audits of switching orders in the high voltage electric power system.

Joseph F. Torri P. E.

JAW

DRC

cc:
0150/W. F. Ford

HVEPS-OI-002
June 1, 1990

0153/D. B. Ercegovic
7000/D. J. Poferl
7300/D. R. Canfield
7310/J. A. Webb, Jr.
7311/H. J. Wroblewski
7320/J. M. Vega
7330/R. J. Horansky
7331/J. H. Norton
7340/J. S. Orack
7360/H. C. Craddock
7370/R. P. Jones
7600/D. J. Keliher
7620/H. A. Schoeffler
7620/H. A. Schoeffler/EASC
7650/E. J. Boitel

HVEPS-OI-03
Revision: March 7, 2001

TO: Distribution

FROM: 7521, Systems Management and Maintenance Branch, Glenn Research Center High Voltage Electrical Power System Manager

SUBJECT: High Voltage Electric Power System
Operating Instruction: HVEPS-OI-03
Compliance with OSHA 29CFR1910.147 Tagout/Lockout:
Tagout Devices

The following High Voltage Electric Power System Operating Instruction, HVEPS-OI-03, Compliance with OSHA 29CFR1910.147 Tagout/Lockout:Tagout Devices, dated March 7, 2001, replaces the previous version of HVEP-OI-3, dated June 1,1990, in it's entirety .

Louis F. Bernhardt (original signed)
Glenn Research Center
High Voltage Electrical
Power System Manager

Concurrence:

(original signed)
_____
Robert M. Suhay
Chairman, Electrical Applications Safety Committee

(original signed)
_____
Manuel Dominguez
Chief, Glenn Safety Office

HVEPS-OI-3

Compliance with OSHA 29CFR1910.147 Tagout/Lockout: Tagout Device

1. General

OSHA 29CFR1910.147, Part (c)(5)(ii)(C)(2) Tagout/Lockout: Tagout Devices, requires the tagout device to be non-releasable with a minimum unlocking strength of no less than 50 pounds and have the general design and basic characteristics of being at least equivalent to a one piece all environment-tolerant nylon cable tie.

2. Policy

The following site specific policy is effective this Date:

In accordance with OSHA 29CFR1910.147, Part (c)(5)(ii)(C)(2), waxed twine currently being used to hang tags can stay in use. The waxed twine is to be considered the **minimum** device for hanging tags.

When and where possible, it is preferred that a nylon cable tie, self locking, and having a minimum breaking strength of 50 pounds be used to affix an electrical isolation tag required by a switching order in the high voltage electric power system.

Any cable tie to be installed outdoors shall be capable of withstanding effects of solar radiation and weather.

7340 September 18, 1990

TO: 7620/Chairman, Electrical Applications Safety Committee
Attn: H. A. Schoeffler

0153/Chief, Safety Assurance Office
Attn: D. B. Ercegovic

FROM: 7340/Chief, Electrical Power Systems Branch

SUBJECT: Operating Instruction: HVEPS-OI-004
ESB Action Item: 8811-06: Electric Power Dispatchers
Electric Power Manholes and Cable Tunnels

The Executive Safety Board has assigned the writer an action item to initiate a directive that an Electric Power Dispatcher be on duty whenever maintenance activity is occurring on high voltage distribution systems in confined spaces.

Attached is the proposed operating instruction for "Work in Electric Power Manholes and Cable Tunnels" for your concurrence. Mr. Schoeffler has agreed to arrange for a joint meeting with SAO for presenting this policy.

In accordance with HVEPS-OI-001, dated May 30, 1990, operating instructions dealing with safety policies in the high voltage electric power system require concurrence of EASC and SAO.

Joseph F. Torri

cc: 7300/D. R. Canfield

7340 September 18, 1990
HVEPS-OI-004

TO: 7310/Chief, Systems Control Engineering Branch
Attn: J. A. Webb, Jr.

FROM: 7340/Chief, Electrical Power Systems Branch

SUBJECT: High Voltage Electric Power System
Operating Instruction - 004:
Work in Electric Power Manholes and Cable Tunnels

The following policies are effective this date:

1. All employees working on or with underground facilities located in electric power manholes and electric cable tunnels shall observe all applicable rules of Section 42 of the National Electrical Safety Code, (ANSI C2-1990.)

2. When covers of electric power manholes, handholes, vaults or tunnels are removed, the opening shall be promptly protected with a barrier or other suitable guard (ANSI C2-1990, Rule 423.A).

3. All requirements of the Lewis Safety Manual regarding Confined Space Entry Permits shall be satisfied prior to and during entry in electric power manholes, vaults or tunnels (LMI 1705.1, and ANSI C2-1990, Rule 423.B).

4. A designated safety person is continuously required outside and near an access during all maintenance and construction in electric power manholes and cable tunnels (ANSI C2-1990, Rule 443.K).

5. Prior to entry to electric power manholes and cable tunnels, the designated safety person shall notify the Electric Power Dispatcher. The Dispatcher shall record the time of entry, the purpose of entry, and the name of the designated safety person.

6. The designated safety person shall maintain a list of all NASA employees and contract personnel in electric power manholes and cable tunnels.

7. The designated safety person shall have a NASA/LeRC approved two way radio to communicate with the Electric Power Dispatcher and the LeRC Fire Station.

8. While working in electric power manholes and cable tunnels, all NASA and contract personnel shall wear the following personnel safety equipment which shall comply with

requirements of latest editions of the following standards:

Safety Equipment	Standard
a) Class B Hard hat	ANSI Z89.1
b) Safety spectacles, goggles or face shield	ANSI Z87.1
c) Safety shoes,	ANSI Z41.1, Class 75

Other personnel protective equipment (insulating gloves, insulating blankets, hot sticks, clothing etc) may be required.

9. An Electric Power Dispatcher shall be on duty whenever maintenance or construction work is performed in existing electric power manholes and cable tunnels.

10. Upon completion of work and exiting from an electric power manhole or an electric cable tunnel, the designated safety man shall inform the Electric Power Dispatcher. The Electric Power Dispatcher shall record the time of exit. All barriers or other suitable guards shall be removed from the openings and the covers of the electric power manhole, or cable tunnel shall be replaced.

Joseph F. Torri P. E.

Concurrences:

Donald R. Canfield,
Acting Chief, Facilities
Operating Division

Hugh A. Schoeffler, Chairman
Electrical Application
Safety Committee

David B. Ercegovic, Chief,
Safety Assurance Office

cc:
0150/W. F. Ford
0153/D. B. Ercegovic
7000/D. J. Poferl

7300/D. R. Canfield
7310/J. A. Webb, Jr.
7311/H. J. Wroblewski
7320/J. M. Vega
7330/R. J. Horansky
7331/J. H. Norton
7340/J. S. Orack
7360/H. C. Craddock
7370/R. P. Jones
7600/D. J. Keliher
7620/H. A. Schoeffler
7620/H. A. Schoeffler/EASC
7650/E. J. Boitel

7340 November 20, 1990
HVEPS-OI-005

TO: Distribution

FROM: 7340/Chief, Electrical Power Systems Branch

SUBJECT: High Voltage Electric Power System
Operating Instruction - 005
Control and Relay Test Program

This operating instruction establishes requirements for a control and relay test program. The purpose of this test program is to demonstrate proper operation of control and relay circuits. This test program shall be implemented prior to placing a new or revised control and relay scheme in service in the high voltage electric power system at the Center.

A proposed test program shall be received and approved by the Electrical Power Systems Branch prior to executing the Program. The schedule of the approved Control and Relay Test Program shall be directed by the Government.

A record, documenting the completion of each step of the approved program, shall be prepared. A copy of the completed record shall be provided to the Government at the conclusion of the test program. A certified copy of the test report shall be provided to the Government within 15 days of completing the test program.

The control and relay test program shall include the following requirements, as a minimum, for all instrument transformers, auxiliary instrument transformers, protective relays, auxiliary relays, control switches, test switches which are part of new or revised control-and-relay schemes:

1. Confirm and record the nameplate data on the following instrument transformers:
   a) current transformers
   b) auxiliary current transformers
   c) potential transformers
   d) auxiliary potential transformers

2. Confirm and record the nameplate data of protective relays and auxiliary relays.

3. Confirm and record the connected ratio and polarity of the secondaries of the following instrument transformers:
   a) current transformers
   b) auxiliary current transformers
   c) potential transformers
   d) auxiliary potential transformers

HVEPS-OI-005
November 20, 1990

4. Demonstrate the existence of a single point ground for each of the following instrument transformer secondary circuits:
   a) current transformers
   b) auxiliary current transformers
   c) potential transformers
   d) auxiliary potential transformers

5. At each protective relay, watt meter, watt hour meter, var meter, var hour meter, test switch, and either an ammeter or ammeter selector switch, demonstrate the correct phasing and polarity of:
   a) current transformer secondary connections
   b) auxiliary current transformer secondary connections

6. At each protective relay, watt meter, watt hour meter, var meter, var hour meter, test switch, and either a voltmeter or voltmeter selector switch, demonstrate the phasing and polarity of:
   a) potential transformer secondary connections
   b) auxiliary potential transformer secondary connections

7. Demonstrate the functional operation of protective relays, auxiliary relays, control switches, auxiliary switches, and circuit breaker (circuit switcher) auxiliary contacts.

8. Demonstrate the proper dropping of targets of all protective relays.

9. Demonstrate the proper pick-up and lock-out of lock-out relays and white lights.

10. Perform the relay manufacturer's recommended setting and calibration procedure to all protective relays set or re-set.

11. Perform the relay manufacturer's recommended "system test procedure" (a.k.a "complete test procedure") to all relays installed or re-wired.

12. Demonstrate the proper supervisory control and data acquisition at the console of the Electric Power Dispatcher including display of status of high voltage power apparatus such as a circuit breaker (circuit switcher), remote operation of the circuit breaker (circuit switcher), display of calibrated electrical quantities such as voltage, current, mega-watts, mega-vars and mega-watt-hours, and display of applied electrical tags.

HVEPS-OI-005
November 20, 1990

13. At the conclusion of the test program, reset all targets of relays.

Joseph F. Torri P. E.

Concurrence:

_____
Richard A. Danks, Chief,
Facilities Operating Division

HVEPS-OI-005
November 20, 1990

cc:
0150/W. F. Ford
0153/D. B. Ercegovic
7000/D. J. Poferl
7300/D. R. Canfield
7310/J. A. Webb, Jr.
7311/H. J. Wroblewski
7320/J. M. Vega
7330/R. J. Horansky
7331/J. H. Norton
7340/J. S. Orack
7360/H. C. Craddock
7370/R. P. Jones
7600/D. J. Keliher
7601/D. J. Fiedler
7620/H. A. Schoeffler
7620/H. A. Schoeffler/EASC
7650/E. J. Boitel

7340 January 25, 1991

TO: Distribution

FROM: 7340/Chief, Electrical Power Systems Branch

SUBJECT: High Voltage Electric Power System
Operating Instruction - 006
HVEPS-OI-006
Naming Conventions for Power Apparatus and Cables

Attached is high voltage electric power system operating instruction, HVEPS-OI-006, to be used at the Lewis Research Center to name high voltage power apparatus, cables and associated equipment.

Joseph F. Torri P. E.

Concurrence:

Richard A. Danks,
Chief, Facilities Operations Division

HVEPS-OI-006
January 25, 1991

Distribution:
0150/W. F. Ford
0153/F. J. Greco
7000/D. J. Poferl
7300/R. A. Danks
7300/D. R. Canfield
7300/D. W. Newland
7310/J. A. Webb, Jr.
7311/H. J. Wroblewski
7320/J. M. Vega
7330/R. J. Horansky
7331/J. H. Norton
7340/J. F. Torri
7360/H. C. Craddock
7360/D. L. Lehota
7370/R. P. Jones
7600/D. J. Keliher
7620/H. A. Schoeffler
7620/H. A. Schoeffler/EASC
7650/E. J. Boitel

HVEPS-OI-006
January 25, 1991

NAMING CONVENTIONS FOR HIGH VOLTAGE POWER APPARATUS AND CABLES

1.0 INTRODUCTION

2.0 GENERAL
- 2.1 Intent
- 2.2 Abbreviations
- 2.3 Definitions
- 2.4 Changes to This Document

3.0 SUBSTATIONS

4.0 BUSES
- 4.1 Substation Buses
- 4.2 Transfer Buses
- 4.3 Emergency Buses
- 4.4 Motor Generator Buses

5.0 HIGH VOLTAGE TRANSFORMERS
- 5.1 Power Transformers
- 5.2 2,400 Volt Distribution Transformers
- 5.3 Emergency Power Transformers
- 5.4 Station Power Transformers
- 5.5 Grounding Transformers

6.0 CIRCUIT BREAKERS AND CIRCUIT SWITCHERS
- 6.1 138 kV Line Exits to CEI at Substation A
- 6.2 Main Circuit Breakers
- 6.3 Circuit Breakers
- 6.4 Tie Circuit Breakers
- 6.5 Transfer Breakers
- 6.6 Dummy Circuit Breakers

7.0 DISCONNECT SWITCHES
- 7.1 138 kV line Disconnect Switches at Substation A

HVEPS-OI-006
January 25, 1991

7.2 Circuit Breaker and Cable Disconnect Switches
7.3 Transformer Disconnect Switches
7.4 Disconnect Switches Used in Place of Circuit Breakers

8.0 GROUNDING NETWORKS

9.0 CAPACITOR BANKS

10.0 VOLTAGE REGULATORS

11.0 2,400 VOLT UNIT SUBSTATIONS

12.0 HIGH VOLTAGE CABLES AND ASSOCIATED EQUIPMENT
12.1 Transmission Cables
12.2 Distribution Cables
12.2.a Transformer Primary Cables
12.2.b Transformer Secondary and Tertiary Cables
12.2.c Cable Exits from Buses
12.2.d Cable Exits from Substations
12.2.e Cable Sectionalizing Boxes
12.2.f Cable Exits from Sectionalizing Boxes
12.2.g Cable Taps
12.3 Names of High Voltage Cable Splices
12.4 Names of Cable Risers

13.0 LOW VOLTAGE CABLES AND ASSOCIATED EQUIPMENT
13.1 Low Voltage Ties Between Buildings
13.2 125 Volt DC Supplies Between Substations and Buildings
13.3 Control and Signaling Cables
13.4 Pilot Wires
13.4 DC Supplies to Substation Breakers
13.5 AC Supplies To Substation Breakers and Transformers

REFERENCES
NAMING CONVENTIONS FOR HIGH VOLTAGE POWER APPARATUS AND CABLES

HVEPS-OI-006
January 25, 1991

1.0 INTRODUCTION

All high voltage power apparatus and cables in the electric power system at the Lewis Research Center shall have a unique name. Names are used by the Electric Power Dispatchers and switchmen to identify specific power apparatus and cables in the field. Accurate and meaningful names of equipment are required for the dispatchers and switchmen to safely perform their duties. Therefore, the names of high voltage power apparatus and cables shall be placed under configuration control (Reference 1).

The purpose of this operating instruction is to establish the basis of naming high voltage power apparatus and cables at the Center. Future additions to the electric power system shall be named in accordance with the conventions described.

2.0 GENERAL

2.1 Intent

Changes in the configuration of the high voltage electric power system may require renaming power apparatus and electric cables. As part of the Project Implementation Plan, the Project Engineer shall secure the concurrence of the Chief, Electrical Power Systems Branch that all proposed name changes comply with the naming conventions for power apparatus and cables.

Conventions presented in Sections 3-11 are used to name substations and power apparatus. Conventions presented in Sections 12 and 13 are used to name electric cables.

2.2 Abbreviations

The following abbreviations are used to identify power apparatus:

GND	Grounding Network
EM	Emergency Bus
MAIN	Main Breaker
PDS	Primary Disconnect Switch
PW	Pilot Wire
SEC	Transformer Secondary
SDS	Secondary Disconnect Switch
SP	Station Power
TER	Transformer Tertiary
T	Transfer Breaker (Primary transfer breaker from one bus to another bus

HVEPS-OI-006
January 25, 1991

TIE	Tie Breaker
VR	Voltage Regulator
X	Transfer Bus or Transfer Breaker

The following abbreviations are used as the voltage description:

Q	138,000 Volt operation
R	34,500 Volt operation
S	13,800 Volt operation
T	6,900 Volt operation
U	4,160 Volt operation
W	2,400 Volt operation
Y	1,200 Volt Operation
V	790 Volt operation
F	480/277 Volt operation
P	208/120 Volt operation (Power)
L	208/120 Volt and 277 Volt operation (Lighting)
D	48, 125, 250 Volt DC operation

2.3 Definitions

Distribution: Referring to 13,800 Volt, 6,900 Volt, 4,160 Volt and 2,400 Volt facilities in the electric power system.

High Voltage: Electric power system equipment rated for operation at 600 Volts and above, rms, ac at 60 Hertz.

Low Voltage: Electric power system equipment rated for operation at less than 600 volts, rms, ac at 60 Hertz and 48 - 250 Volts DC where used in the electric power system.

Power Apparatus: High Voltage electrical equipment including power transformers, voltage regulators, circuit breakers, circuit switchers, station power transformers, grounding networks (including grounding transformers, disconnect switches, and grounding resistors), disconnect switches, metal enclosed switchgear, capacitor banks, Unit substations, and other similar power equipment.

Transmission: Referring to 138,000 Volt and 34,500 Volt facilities in the electric power system.

HVEPS-OI-006
January 25, 1991

2.4 Changes to This Document

Changes are noted by a heavy black vertical line at the right edge.

3.0 SUBSTATIONS

All high voltage substations shall be named with a single letter. Letters I, O and Q shall not be used.

4.0 BUSES

4.1 Substation Buses

Each high voltage bus in a substation shall be named with the following characters:

Letter 1 , Letter 2 , Number
where ...

Letter 1: The voltage description.
Letter 2: The substation name.
Number: The number of the bus.
Note for buses supplied by tertiary windings:
a) Buses supplied by the Y tertiary winding are the transformer number with a suffix of 1
b) Buses supplied by the Z tertiary winding are the transformer number with a suffix of 2

Examples:

QA7: 138,000 Volt Bus number 7 at Substation A.
RA2: 34,500 Volt Bus number 2 at Substation A.
WE1: 2,400 Volt Bus number 1 at Substation E.
TK101: 6,900 Volt Bus supplied by the Y tertiary winding of Transformer K10 at Substation K.
TK102: 6,900 Volt Bus supplied by the Z tertiary winding of Transformer K10 at Substation K.

4.2 Transfer Buses

A high voltage transfer bus is used to transfer electric loads from one bus to another, for example the transfer bus for Substation D. Each transfer bus shall be named with the following characters:

HVEPS-OI-006
January 25, 1991

Letter 1 , Letter 2 , X , Number
where ...

Letter 1: The voltage description.
Letter 2: The substation name.
X: Transfer Bus.
Number: The transfer bus number beginning with 1.

Examples:
WDX1: The 2,400 Volt Transfer Bus 1 for Substation D.
WEX1: The 2,400 Volt Transfer Bus 1 for Substation E.

4.3 Emergency Buses

Each high voltage emergency bus shall be named with the following characters:

Letter 1 , Letter 2 , EM , Number
where ...
Letter 1: The voltage description.
Letter 2: Name of the substation where the emergency bus is located.
EM: Emergency bus.
Number: The emergency bus number beginning with 1.

Examples:
WBEM1: The 2,400 Volt emergency bus at Substation B.
WGEM1: The 2,400 Volt emergency bus at Substation G.

4.4 Motor Generator Buses

A motor generator bus is the supply bus to a motor of a motor generator powering a variable frequency system to start large motors. Two motor generator buses are used in Building 64 to start the large synchronous motors. Duplicate names of motor generator buses in a given building are not permitted. Each motor generator bus shall be named with the following characters:

Letter , MG , Number
where ...
Letter: The voltage description for the start voltage.
MG: Motor generator bus.
Number: The motor generator bus number beginning with 1.

Examples:
YMG1: The 1,200 Volt motor generator bus in a building.
YMG2: The 1,200 Volt motor generator bus in a building.

HVEPS-OI-006
January 25, 1991

5.0 HIGH VOLTAGE TRANSFORMERS

5.1 Power Transformers

Each high voltage power transformer located at substations shall be named with the following characters:

Letter , Number
where ...
Letter: The substation name.
Number: The number of the transformer; transformer numbers at each substation shall be unique.

Examples:
A2: Transformer 2 at Substation A.
K10: Transformer 10 at Substation K.

5.2 2,400 Volt Distribution Transformers

The name of a 2,400 Volt distribution transformer shall be the name of the feeder cable (Section 12.0) connected to the primary winding of the transformer with the voltage prefix removed.

5.3 Emergency Power Transformers

The name of an emergency power transformer shall be the name of the emergency power feeder cable (Reference 2) connected to the primary winding of the transformer, with the voltage prefix removed.

5.4 Station Power Transformers

Each station power transformer shall be named with the following characters:

Bus Name , SP
where ...
Bus Name: The full name of the substation bus (Section 4.1).
SP: Station Power.

Examples:
RG3SP: The station power transformer connected to the 34,500 Volt Bus 3 at Substation G.
RA1SP: The station power transformer connected to the 34,500 Volt Bus 1 at Substation A.

HVEPS-OI-006
January 25, 1991

5.5 Grounding Transformers

Each grounding transformer shall be named following the convention described in Section 8.0.

6.0 CIRCUIT BREAKERS AND CIRCUIT SWITCHERS

6.1 138 kV Line Exits to CEI at Substation A

The circuit breakers at Substation A for the four 138 kV line exits to the Cleveland Electric Illuminating Company have been named Q15FW, Q16FW, Q17FW and Q18FW.

6.2 Main Circuit Breakers

High voltage main circuit breakers are associated with a bus; each main circuit breaker shall be named with the following characters:

Bus Name , MAIN
where ...
Bus Name: The full name of the substation bus (Section 4.1).
MAIN: A Main circuit breaker.

Examples:
WC2MAIN: The 2,400 Volt main circuit breaker for Bus 2 at Substation C.
TH1MAIN: The 6,900 Volt main circuit breaker for Bus 1 at Substation H.

6.3 Circuit Breakers

Each high voltage network circuit breaker, branch circuit breaker and circuit switcher shall be named with the following characters:

Bus Name , Letter
where ...
Bus Name: The full name of the bus (Section 4.0).
Letter: The breaker letter normally beginning with A.

Examples:
QA8B: The 138,000 Volt circuit breaker B at Bus QA8.
WB2E: The 2,400 volt circuit breaker E at Bus WB2.
WBEM1A: Breaker A at 2,400 Volt Emergency Bus 1 at Sub B.

6.4 Tie Circuit Breakers

HVEPS-OI-006
January 25, 1991

High voltage tie breakers are used to connect two high voltage busses within a substation. With a breaker closed, it would be possible supplied from two or more transformers. Each high voltage tie breaker shall be named with the following characters:

Letter 1 , Letter 2 , Number 1 , Number 2 , TIE
where ...

Letter 1:	The voltage description.
Letter 2:	The substation name.
Number 1:	The lowest number of the bus tied with this breaker.
Number 2:	The highest number of the bus tied with this breaker.
TIE:	Tie Circuit Breaker.

Examples:

QA89TIE:	The 138,000 Volt tie breaker at Substation A between buses QA8 and QA9.
RG24TIE:	The 34,500 Volt tie breaker at Substation G between buses RG2 and RG4.
WC12TIE:	The 2,400 Volt tie breaker at Substation C between buses WC1 and WC2.

6.5 Transfer Breakers

A transfer breaker is used to connect a high voltage bus to a Transfer Bus.

6.5.a Transfer Breakers Located at Distribution Switchgear

Each high voltage transfer breaker located at distribution switchgear shall be named with the following characters:

Name , Letter
where ...

Name: The full name of the high voltage bus (Section 4.1).
Letter: X representing the first transfer breaker connected to the bus
T representing the second transfer breaker connected to the bus;

Example:

WE1X:	The 2,400 Volt transfer breaker for Bus WE1.

6.5.b Transfer Breakers Located at Transfer Switchgear

Each high voltage transfer breaker located at transfer switchgear shall be named with the following characters:

Name , Letter

where ..
Name: The full name of the transfer bus (Section 4.2)
Letter: The name of the breaker.

Example:
WDX1A: The 2,400 Volt transfer breaker A at Bus WDX1.

6.6 Dummy Circuit Breakers

Each high voltage dummy circuit breaker (a breaker having no operating mechanism) shall be named with the following characters:

Breaker Name , DUMMY
where ...
Breaker Name: The full circuit breaker name (Section 6.3).
DUMMY: Dummy breaker.

Examples:
WN1DDUMMY: A 2,400 Volt dummy circuit breaker in breaker position D on Bus 1 at Substation N
WG5FDUMMY: A 2,400 Volt dummy circuit breaker in breaker position F on Bus 5 at Substation G

7.0 DISCONNECT SWITCHES

7.1 138 kV Line Disconnect Switches at Substation A

Four 138 kV disconnect switches are located at each of the line exits to CEI from Substation A. The disconnect switches are numbered as follows:

	138 kV Line Exits at Substation A			
	Q15FW	Q16FW	Q17FW	Q18FW
Surge Arrestor Disc. Switch	521	621	721	821
Line Disconnect Switch	522	622	722	822
Line Grounding Switch	523	623	723	823
Bus Disconnect Switch	520	620	720	820

7.2 Circuit Breaker and Cable Disconnect Switches

Each disconnect switch associated with a high voltage circuit breaker or cable shall be named with the following characters:

Letter 1 , Letter 2 , Number

where ...
Letter 1: The voltage description,
Letter 2: The name of the substation,
Number: A two or three digit number for each switch in the substation
Examples:
RA10: Disconnect switch in the 34.5 kV Substation A.
QA526: Disconnect switch in the 138 kV Substation A.

7.3 Transformer Disconnect Switches

Each disconnect switch associated with a high voltage transformer shall be named with the following characters:
Transformer Name , String
where ...
Transformer Name: The name of the power transformer (Section 5.1)
String: PDS = primary disconnect switch
SDS = secondary disconnect switch
Examples:
J1PDS: The primary disconnect switch on Transformer J1.
J1SDS: The secondary disconnect switch on Transformer J1.

7.4 Disconnect Switches Used in Place of Circuit Breakers

Disconnect switches may be used in place of circuit breakers in the LeRC high voltage power system. Each such disconnect switch shall carry the name of a breaker and shall meet the conventions described in Sections 6.2, 6.3 or 6.4.

8.0 GROUNDING NETWORKS

Each high voltage grounding network, including the associated disconnect switch, zig-zag grounding transformer and grounding resistor, shall be named with the following characters:
Bus Name , GND
where ...
Bus Name: The full name of the substation bus (Section 4.1).
GND: Grounding Network.
Example:
RA1GND: The grounding network connected to the 34,500 Volt Bus 1 at Substation A.

HVEPS-OI-006
January 25, 1991

9.0 CAPACITOR BANKS

Each high voltage capacitor bank shall be named with the following characters:

Cable Name , Character

where ...

Cable Name: The full name of the high voltage cable (Section 12.0).

Character: The character shall either be a letter (beginning with A) or a numeral (beginning with 1). A character is required when one cable feeds multiple capacitor bank compartments (such as at Substation K capacitor yard).

Example:

TK92B1A: The 6,900 Volt Capacitor Bank connected to cable TK92B1 at Substation K.

10.0 VOLTAGE REGULATORS

Each voltage regulator shall be named with the following characters:

Name , VR

where ...

Name: Either the full name of the transformer (Section 5.1) or the full name of the cable (Section 12.0).

VR: Voltage Regulator.

Examples:

M1VR: The regulator connected to the M1 transformer.

WG4L1VR: The voltage regulator connected to cable WG4L1.

11.0 2,400 VOLT UNIT SUBSTATIONS

The name of each unit substation shall be the name of the feeder cable (Section 12.0) less the voltage prefix connected to the primary winding of the transformer.

Aliases, such as "Unit Sub 3", shall be permitted; however there shall be no duplication of aliases at a given building.

12.0 HIGH VOLTAGE CABLES AND ASSOCIATED EQUIPMENT

12.1 Transmission Cables

Each transmission cable shall be identified with the following characters:

HVEPS-OI-006
January 25, 1991

Name, Number
where ...
Name: Full name of the breaker (Section 6.0).
Number: Number of Cable exiting breaker beginning with 1, (must be 1 even if only one feeder cable exits this feeder breaker).
Examples:
QA7A1: A 138,000 Volt cable from Breaker QA7A.
RA1J3: A 34,500 Volt cable from Breaker RA1J.

12.2 Distribution Cables

12.2.a Transformer Primary Cables

Transformer primary cables shall be identified when, for example, the primary disconnect switch is remotely located from the transformer. Generally, the primary disconnect switch is located adjacent to the transformer; in such an example, no name is given to the short length of cable or wire connecting the primary disconnect switch and the transformer. When required, a transformer primary cable shall be identified with the following characters:

Letter , Name , String , Number
where ...
Letter: Voltage descriptor.
Name: The full name of the transformer (Section 5.0)
String: PRI = transformer primary winding.
Number: The number of the circuit beginning with 1.
Examples:
WK2C1C1PRI1: The primary cable for transformer K2C1C1 fed from a remote primary disconnect switch.
WG5A2CPRI1: The primary cable for transformer G5A2C fed from a remote primary disconnect switch.

12.2.b Transformer Secondary and Tertiary Cables

Each transformer secondary or tertiary cable shall be identified with the following characters:

Letter , Name , String , Number
where ...
Letter: Voltage descriptor.
Name: The full name of the transformer (Section 5.0)
String: SEC = transformer secondary winding.
TER = transformer tertiary winding.
Number: The number of the circuit beginning with 1.

HVEPS-OI-006
January 25, 1991

Examples:
L1SEC1: A cable from Transformer L1 secondary.
TK102TER2: The second cable from tertiary winding "2" on Transformer K10.

12.2.c Cable Exits from Buses

Generally, good practice requires that circuits exit buses through circuit breakers or circuit switchers. However, at the Center, several examples exist of cables connected directly to high voltage buses. Each cable exiting a high voltage bus shall be identified with the following characters:

Name , CABLE , Number
where ...
Name: The full name of the bus (Section 4.0).
CABLE: Denotes a cable extension of the bus.
Number: The number of the high voltage cable, beginning with 1, when more than one three-phase cable exits the bus.

Examples:
RB2CABLE: One 34,500 Volt cable connected to Bus RB2.
WJ5CABLE1: One of more than one 2,400 Volt cables connected to Bus WJ5A.

12.2.d Cable Exits from Substation Breakers

Each distribution cable exiting a substation through a circuit breaker or a circuit switcher shall be identified with the following characters:

Name , Number
where ...
Name: The full name of the breaker (Section 6.0).
Number: The number of the high voltage feeder beginning with 1, (must be 1 even if only one feeder cable exits this feeder breaker).

Examples:
SJ7L1: A 13,800 Volt cable exit from breaker L at Switchgear J7
TK91A1: A 6,900 Volt cable exit from breaker A at Switchgear K91
WG4B2: The second 2,400 volt cable connected to Breaker B on Bus G4

12.2.e Cable Sectionalizing Boxes

LeRC presently uses cable sectionalizing boxes in manholes, tunnels and buildings to permit multiple electric loads to be connected to a feeder. The name of a sectionalizing box shall be the

HVEPS-OI-006
January 25, 1991

full name of the supply cable.

In some cases two parallel cables from the same circuit breaker supply a sectionalizing box. In this example, the name of the sectionalizing box is the name of the lowest ranking cable.

Example:

Supply cable names:	WC1E1 and WC1E2
Sectionalizing box name:	WC1E1

12.2.f Cable Exits from Sectionalizing Boxes

LeRC generally uses four position sectionalizing boxes. Each cablehead position shall be named even though no cablehead may be installed. The cablehead for the incoming (supply) cable may be installed in any position; the name of cablehead position of the incoming cable shall be the same as the name of the incoming cable. The name of each outgoing (load) cablehead position shall be determined by the clockwise physical location of the cablehead, relative to the location of the incoming cable; the name of each outgoing position shall be composed of the name of the supply cable and a one character suffix; the suffix shall either be a letter (beginning with A) or a digit (beginning with 1).

Example 1: Incoming cable name:	WG4B1
Outgoing position names:	WG4B1A
(in clockwise rotation	WG4B1B
from WG4B1 location)	WG4B1C

Example 2: Incoming cable name:	WG4B1A
Outgoing position names:	WG4B1A1
(in clockwise rotation	WG4B1A2
from WG4B1A location)	WG4B1A3

Note 1: All outgoing positions on the sectionalizing box are named; a cable connected to an outgoing position is given the name of the position.

Note 2: Names are assigned to all outgoing positions even though a position may not have a cablehead installed.

Thus "WG4B1C" would be a correct name even though cable WG4B1A or cable WG4B1B

may not exist (the name would also be correct even when cableheads are not installed); this would occur when the one outgoing cable is connected through a cablehead in the third clockwise position from the incoming cable position.

In some cases two parallel cables from the same circuit breaker supply a sectionalizing box. In this example, the name of each outgoing (load) cablehead position shall be determined by the clockwise physical location of the cablehead, relative to the location of the incoming cable; the name of each outgoing position shall be composed of the name of the lowest ranking supply cable and a one character suffix; the suffix shall either be a letter (beginning with A) or a digit (beginning with 1).

Example:
Supply cable names: WC1E1 and WC1E2
Outgoing cable names: WC1E1A
WC1E1B

12.2.g Cable Taps

Tapped or looped cable connections are occasionally used at primary disconnect switches of power transformers or at buses located in metal enclosed switchgear in buildings so a feeder cable supplies multiple load centers. (Generally, good practice requires the utilization of sectionalizing boxes to supply multiple loads.)

The name of the transformer or bus where the looped connection is made shall be name of the feeder cable:

a) For transformers, the transformer takes the name of the supply cable less the voltage prefix;
b) For buses, the bus takes the name of the supply cable.

The tapped feeder exiting the bus or transformer shall take the name of the supply cable plus and a one character suffix; the suffix shall either be a letter (A, B, C) or a digit (1, 2, 3).

12.3 Cable Splices

LeRC uses only straight splices for electric cables in manholes, tunnels and buildings. The use of straight splices in cables does not result in a change in the name of a cable. The name of each cable splice shall be the full name of the cable.

HVEPS-OI-006
January 25, 1991

12.4 High Voltage Cable Risers

LeRC presently uses high voltage cable risers to bring the high voltage cables into aerial substations and to high voltage transformer compartments. The name of each cable riser shall be the full name of the cable.

13.0 LOW VOLTAGE CABLES AND ASSOCIATED EQUIPMENT

13.1 Low voltage AC Transfers Between Buildings

The names of low voltage transfer cables between panels in different buildings shall consist of the following characters:

Number 1, Name, Number 2
where ...
Number 1: The number of the building where the cable originates.
Name: The 5 digit name of the panel where the circuit originates.
Number 2: The breaker number on the panel where circuit originates; this number replaces the last digit(s) of the panel name.

Examples:
15F2003: 480/277 Volt cable from Building 15, panel F2000, breaker 3.
15P1012: 208/120 Volt cable from Building 15, panel P1000, breaker 12.

13.2 Low Voltage DC Supplies Between Substations and Buildings

The names of 48, 125 and 250 Volt DC cables between panels in different buildings including substations shall consist of the following characters:

Number 1, Name, Number 2
where ...
Number 1: The number of the building where the cable originates.
Name: The 5 digit name of the panel where the circuit originates.
Number 2: The breaker number on the panel where the circuit originates; this number replaces the last digit(s) of the panel name.

Examples:
5D2006: 125 VDC from panel D2000, breaker 6 in Building 5.
13D1003: Low voltage cable from Building 13, panel D1000, breaker 3.

13.3 Control and Relaying Cables

HVEPS-OI-006
January 25, 1991

The name of each control and relaying cable shall consist of the following characters:

Number 1 , String , Number 2

where ..

Number 1: The control/relay panel number in the substation String: the designation assigned to the terminating terminal block (Refer to the wiring diagram of the panel).

Number 2: The number of the control and relaying cable beginning with 1, (must be 1 even if only one cable exits this terminal block).

Example:

10BB1: A control and relaying cable terminating at terminal block BB on Panel 10.

Note: SCADA wiring and wiring terminating at RTU and DTC cabinets shall be named in accordance with established NASA SCADA System requirements.

13.4 Pilot Wires

The names of optical fibers or copper wires used between substations for high voltage relaying applications shall consist of the following characters:

Number , PW

where ...

Number: A unique number identifying a pilot wire.

PW: Pilot Wire

Example:

5PW: Pilot wire number 5.

13.5 DC Supplies to Substation Breakers

The name of 48, 125 and 250 Volt DC cables between a control house and high voltage circuit breakers in a substation shall be as described in Section 4.2.

13.6 AC Supplies to Substation Breakers and Transformers

The name of a low voltage (208/120 Volt, 480/277 volt) ac cable between a control house and high voltage circuit breakers and transformers in a substation shall be as described in Section 4.1.

HVEPS-OI-006
January 25, 1991

REFERENCE:

1. LMI 8820.1, Configuration Control, LeRC, September 11, 1990

7340 January 25, 1991

TO: Distribution

FROM: 7340/Chief, Electrical Power Systems Branch

SUBJECT: High Voltage Electric Power System
Operating Instruction - 007
HVEPS-OI-007
Place Name Tags on Power Apparatus and Cables

Attached is the high voltage electric power system operating instruction, HVEPS-OI-007 to be used at the Lewis Research Center to place name tags on high voltage power apparatus and cables.

Joseph F. Torri P. E.

Concurrence:

_____
Richard A. Danks, Chief
Facilities Operations Division

HVEPS-OI-007
January 25, 1991

Distribution:
0150/W. F. Ford
0153/D. B. Ercegovic
7000/D. J. Poferl
7300/R. A. Danks
7300/D. R. Canfield
7300/D. W. Newland
7310/J. A. Webb, Jr.
7311/H. J. Wroblewski
7320/J. M. Vega
7330/R. J. Horansky
7331/J. H. Norton
7360/H. C. Craddock
7360/D. L. Lehota
7370/R. P. Jones
7600/D. J. Keliher
7620/H. A. Schoeffler
7620/H. A. Schoeffler/EASC
7650/E. J. Boitel

HVEPS-OI-007
January 25, 1991

PLACE NAME TAGS ON POWER APPARATUS AND CABLES
in the Electrical Power System

1.0 INTRODUCTION

2.0 GENERAL
2.1 Definitions
2.2 Changes to This Document

3.0 PLACE TEMPORARY NAME TAGS
3.1 Temporary Name Tags Placed on Power Apparatus
3.2 Temporary Name Tags Placed on Cables

4.0 STENCIL STANDARD NAME TAGS ON POWER APPARATUS
4.1 Replace Old Name Tags on Power Apparatus
4.2 Place Standard Name Tags on New or Unidentified Power Apparatus
4.3 Replace Contractors' Temporary Name Tags on Power Apparatus

5.0 PLACE STANDARD NAME TAGS ON ELECTRIC CABLES
5.1 Replace Old Name Tags on Electric Cables
5.2 Place Standard Name Tags on New or Unidentified Cables
5.3 Replace Contractors' Temporary Name Tags on Electric Cables

6.0 PLACE REMOVAL NAME TAGS
6.1 Removal Name Tags for Power Apparatus
6.2 Removal Name Tags for High Voltage Cables

REFERENCES

APPENDICES

Appendix 1: Specification for Standard Name Tags
Appendix 2: Specification for Temporary Name Tags
Appendix 3: Specification for Removal Name Tags

PLACE NAME TAGS ON POWER APPARATUS AND CABLES

1.0 INTRODUCTION

HVEPS-OI-007
January 25, 1991

The importance of accurate record keeping in the high voltage electrical power system has been underscored by the Lewis Management Instruction, LMI-8820.1 (Reference 1). The need exists for established practices to place name tags on power apparatus and cables to promote accurate identification of equipment in the system and to promote safety of individuals. The need also exists for maintaining accuracy of the name tags and electrical drawings showing the names and location of power apparatus. As a result, the placement of name tags on power apparatus and cables is placed under configuration control.

Requirements of this operating instruction are to be used by the Center to develop procedures to maintain configuration control and to write specifications and contractual requirements to placing name tags on power apparatus and electrical cables.

Naming conventions for high voltage power apparatus and cables are presented in Reference 2.

2.0 GENERAL

Only persons (including civil servants and contract personnel) authorized by the Chief, Electrical Power Systems Branch shall be permitted to:

a) Apply a standard name tag (Appendix 1) on power apparatus and cables
b) Apply a removal name tag (Appendix 3) on power apparatus and cables;
c) Remove a standard name tag from power apparatus and cables; or
d) Remove a government accepted temporary name tag (Appendix 2) from power apparatus and cables.

A construction Contractor shall **not** be permitted to:

a) Remove a standard name tag
b) remove a temporary name tag installed by another Contractor;
c) remove a temporary name tag installed by the Contractor which has been inspected and accepted by the Government;
d) remove an old name tag; or
e) place a temporary name tag which obstructs a standard name tag.

2.1 Definitions

For the purpose of this operating instruction, the following definitions apply:

<u>Contractor:</u> (Generally known as a construction Contractor.) Organization under contract with the Government to perform services in the high voltage

power system (other than the support service Contractor for high voltage maintenance in the electric power system).

High Voltage: Power apparatus and cables rated for operation at 600 Volts and above, rms, ac at 60 Hertz.

Low Voltage: Power apparatus and cables rated for operation at less than 600 Volts, rms, ac at 60 Hertz and up to 250 Volts DC where used in equipment in the electric power system.

Name tag: Either the identification affixed to a cable or the identification stenciled on power apparatus and cables.

Old name tag: Name tag on power apparatus and cables existing on May 1, 1989.

Power apparatus: High voltage electrical equipment including power transformers, voltage regulators, circuit breakers, circuit switchers, station power transformers, grounding networks (including grounding transformers, disconnect switches, and grounding resistors), disconnect switches, metal enclosed switchgear, capacitor banks, Unit substations ,and other similar power equipment.

Removal name tag: A name tag applied by the Government to power apparatus and cables to be removed from service. See Appendix 3.

Standard name tag: A permanent tag applied by the Government to power apparatus and cables. See Appendix 1.

Temporary name tag: A name tag applied by Contractors to power apparatus and cables. See Appendix 2.

2.2. Changes to This Document

Changes are noted by a heavy black vertical line at the outside edge.

3.0 PLACE TEMPORARY NAME TAGS

Changes in the configuration of the electric power system may require renaming power apparatus and electric cables. As part of the Project Implementation Plan, the Project Engineer shall secure the concurrence of the Electric Power System Manager that all proposed name changes comply with the naming conventions for power apparatus and electric power cables

and associated apparatus (Reference 2).

A Contractor shall only use Government furnished temporary name tags (Appendix 2). A Contractor shall attach temporary name tags to power apparatus and cables installed by the Contractor. The Contractor shall also attach temporary name tags to power apparatus and cables renamed as part of the contract. The Contractor shall place temporary name tags to be visible and correctly read from left-to-right or from top-to-bottom by a person facing the front of the power apparatus or cable.

The Contractor shall place temporary name tags using plastic self-locking cable ties similar to: TY-RAP Cable Ties, Catalog Number: TY528M, 50 pound minimum holding strength, Thomas and Betts Company, Edison, New Jersey.

3.1 Temporary Tags Placed on High Voltage Power Apparatus

A Contractor shall place a temporary name tag on power apparatus in one of the following locations:

a) a hasp for padlocking the apparatus providing the tag or cable tie does not impede the opening or closing of a compartment;
b) a hole in the supporting steel work of the apparatus;
c) a suitable appendage from the apparatus from which the tag may not be removed without cutting the cable tie;
d) the operating pipe for a disconnect switch; or
e) in the event that none of the above locations are suitable for the tag, the tag shall be placed at the direction of the Government.

A Contractor shall attach a temporary name tag to power apparatus using a plastic cable tie passing through both holes at the top/left end of the plastic tag. Each cable tie shall pass once through a suitable hole or once around a suitable appendage on power apparatus and the two ends shall be joined together. A Contractor may remove his temporary name tags prior to inspection and acceptance by the Government.
Following inspection and acceptance of the name tag by the Government, the inspector shall insert a second plastic cable tie through the two remaining holes at the right/bottom end of the name tag and shall join them together to form a hanging loop.

3.2 Temporary Name Tags Placed on Cables

A Contractor shall install temporary name tags to each cable at each of the following locations:

a) cable-entrance to metal-clad switchgear;
b) cable-entrance and cable-exit to manholes and tunnels;
c) cable entrance to sectionalizing boxes;

HVEPS-OI-007
January 25, 1991

d) cable splices;
e) cable terminations;
f) cable at power transformers; and
g) at the following intervals in tunnels:

Tunnel	Intervals not to exceed:
Sub B Cable Tunnel	100 feet
Sub G Cable Tunnel	100 feet
Sub G to Building 53	200 feet
Sub G to Building 90	200 feet
Sub A to Sub K	300 feet
Building 23 to Building 77	100 feet
Building 500 to Building 501	100 feet
Building 9 Cable Room	100 feet

A Contractor shall attach a temporary name tag to cables using a cable tie attached through two (2) holes at the left/top end of the plastic tag. The cable tie shall pass once around a cable and the two ends shall be joined together. A Contractor may remove his temporary name tags prior to acceptance by the Government.

Following acceptance of the temporary name tag, the inspector shall attach a second plastic cable tie through the two holes in the right/bottom end of the name tag; this cable tie shall pass once around the cable and the two ends shall be joined together.

The Contractor shall also use non-metallic tags to mark phases of cables supplied under contract at locations required by Reference 3. Markings shall be visible by a person facing the cables. Tags identifying electrical phases shall be of the following type:

a) Colored tape wrapped around each conductor, where:
   Black Tape for Phase 1;
   Red Tape for Phase 2;
   Blue Tape for Phase 3.
b) Continuous conductor tracer, or
c) Non-conducting fiberboard or equivalent showing the phase number and a plastic cable tie.

4.0 STENCIL NAME TAGS ON POWER APPARATUS

4.1 Replace Old Name Tags on Power Apparatus

Between May, 1989 through December, 1990, the Government shall revise the names of all power apparatus at the Center and place these names under configuration control. The Government shall assign new names to existing power apparatus (including power apparatus

with no names) using the naming conventions presented in Reference 2. The Government shall revise prints of existing one line diagrams to reflect the new names of power apparatus. The Electric Power Systems Manager shall approve the revised prints. Following this approval, the Government shall:

a) Verify the names of installed power apparatus in the field;
b) Verify names of power apparatus on the revised prints of one line diagrams;
c) Stencil new standard name tags (Appendix 1) on power apparatus in an obvious location visible to a person facing the power apparatus; and
d) Delete old name tags (Old name tags shall either be stencilled over or painted over with a color matching the color of the apparatus).

4.2 Replace Contractors' Temporary Name Tags on Power Apparatus

Following acceptance of a Contractor's work, the Government shall:

a) Verify the names of all Contractor installed power apparatus;
b) Verify equipment names on prints of as-built field construction drawings;
c) Stencil new standard name tags (Appendix 1) on power apparatus in an obvious location visible to a person facing the power apparatus;
d) Delete old name tags (Old name tags shall either be stencilled over or painted over with a color matching the color of the apparatus); and
e) Remove and destroy temporary name tags (Section 3.1).

5.0 PLACE STANDARD NAME TAGS ON ELECTRIC CABLES

5.1 Replace Old Name Tags on Electric Cables

Between May, 1989 through December, 1990, the Government shall revise the names of all high voltage electric cables at the Center and place these names under configuration control. The Government shall assign new names to existing high voltage cables (including cables with no names) using the naming conventions presented in Reference 2. The Government shall revise prints of existing one line diagrams, power manhole drawings and electric cable tunnel drawings to reflect the new names of high voltage cables. The Electric Power Systems Manager shall approve the revised prints.

The Government shall replace all old name tags on electric power cables with standard name tags (Appendix 1). The Government shall affix a standard name tag to all high voltage cables and all field verified low voltage cables in tunnels in accordance with the locations given in Section 3.2. The name tag shall be so located to be visible and correctly read from left-to-right or from top-to-bottom by a person facing the cable.

HVEPS-OI-007
January 25, 1991

Following approval of revised prints of one line diagrams, the Government shall:

a) Verify the names of existing high voltage cables;
b) Verify the names of existing low voltage cables installed in power manholes;
c) Verify the names of low voltage tie cables installed in electric cable tunnels and power manholes;
d) Verify names of power apparatus;
e) Install standard name tags (Appendix 1) to high voltage cables. The Government shall use one stainless steel cable tie attached through two (2) holes at each end of the stainless steel tag. Each cable tie shall pass once around the cable and the two ends shall be joined together by a lead seal.
f) Install standard name tags (Appendix 1) to field verified low voltage cables passing through power manholes. The Government shall use one stainless steel cable tie attached through the hole at each end of the stainless steel tag. Each cable tie shall pass once around the cable and the two ends shall be joined together by a lead seal;
g) Remove and destroy old name tags;
h) Apply a standard name tag to all cable splices, cable risers, sectionalizing boxes, cable terminations and other similar equipment;
i) Revise "as-built" prints of one line diagrams and power manhole drawings; and
j) Apply name tags to walls of power manholes and cable tunnels.

5.2 Replace Contractor's Temporary Name Tags on Electric Cables

Following acceptance of a Contractor's work, the Government shall:

a) Verify the names of Contractor installed cables;
b) Verify equipment names on prints of "as-built" field construction drawings
c) Install standard name tags (Appendix 1) to high voltage cables. The Government shall use one stainless steel cable tie attached through two (2) holes at each end of the stainless steel tag. Each cable tie shall pass once around the cable and the two ends shall be joined together by a lead seal.
d) Install standard name tags (Appendix 1) to field verified low voltage cables passing through power manholes. The Government shall use one stainless steel cable tie attached through the hole at each end of the stainless steel tag. Each cable tie shall pass once around the cable and the two ends shall be joined together by a lead seal;
e) Remove and destroy temporary name tags (Section 3.2);
f) Apply a standard name tag to all cable splices, cable risers, sectionalizing boxes, cable terminations and other similar equipment;
g) Apply name tags to walls of manholes and tunnels furnished under contract; and

h) Verify the electrical phasing (Reference 5) of high voltage cables at each transformer, termination and switchboard.

6.0 PLACE REMOVAL NAME TAGS

The Government shall install a removal name tag (Appendix 3) to identify each power apparatus and high voltage cable to be removed. This removal name tag shall be installed at every location of a standard name tag (Section 3.2) before the power apparatus is removed or the cable is cut, disconnected or removed.

6.1 Removal Name Tags for Power Apparatus

The Government shall paint a removal name tag (Appendix 3) on high voltage power apparatus to be removed. The two stenciled tags shall be located adjacent to one another.

6.2 Removal Name Tags for High Voltage Cables

The Government shall attach a removal name tag (Appendix 3) to a high voltage cable to be removed using a plastic self-locking cable-tie attached through two holes at each end of the plastic name tag. Each cable tie shall pass once around the cable and the two ends shall be joined together. The removal name tag shall be so located to be visible and correctly read from left to right or from top to bottom by a person facing the front of the cable. When the Government installs a removal name tag, the Government shall remove and destroy the standard name tag (Appendix 1) from each cable to be removed.

REFERENCES

1. LMI 8820.1, Configuration Control

2. HVEPS-OI-006: Naming Conventions Power Apparatus and Cables, NASA/LeRC.

3. Requirements for Field Checking Electrical Phasing and Phase Rotation, NASA/LeRC, June 1, 1988.

HVEPS-OI-007
January 25, 1991

APPENDIX 1: SPECIFICATION FOR STANDARD NAME TAGS

Standard Name Tags for Cables

The standard name tag shall be a permanent name tag for electric cables and cable splices located in the NASA/LeRC electric power system.

Material : Stainless steel
Thickness: 11 Gauge

	High Voltage		Low Voltage Cables
Size:	2 inches x 4 inches		1 inch x 4 inches
	Top Row:	Cable Name	One Row: Cable Name
	Middle Row:	Phasing ID	
	Bottom Row:	Name Tag	
		Installation Date	

Standard Name Tags Stencilled to Power Apparatus

The standard name tag shall be the permanent name tag for high voltage power apparatus installed in the NASA/LeRC electric power system. This tag shall have a yellow background (minimum size of 3 inches by 9 inches) with black stencils; the minimum size of stencils shall be 1 inch.

Standard Name Tags for Power Manholes and Cable Tunnels

The standard name tag for power manholes and cable tunnels in the NASA/LeRC electric power system shall consist of a lamicoid style plastic rectangle, white in color with red letters. This tag shall be permanently affixed to one wall in manholes and tunnels. The name tag for power manholes shall carry the following information "MANHOLE ###". The name tag for cable tunnels shall carry the name of the cable tunnel (Section 3.2).

Each wall of a manhole or a tunnel shall be named using a numeral beginning with "1", "2", "3", ... The standard name tag for a wall shall consist of a lamicoid plastic square, white in color with a red numeral.

APPENDIX 2: SPECIFICATION FOR TEMPORARY NAME TAGS

HVEPS-OI-007
January 25, 1991

A temporary name tag shall be furnished by Government and shall be made of plastic. The name on the name tag shall be in compliance with Reference 3. The Government shall determine the color of this tag. However, the color of this tag shall not be red.

Size: 1 1/8 inches x 7 inches
Top Row : Name of cable or name of power apparatus
Second Row : Contractor's Name
Third Row : Contract Number
Fourth Row : Name Tag Installation Date

Similar To: "Write-On Pipe Markers", Style Number WRO-1, Seaton Name Plate Company, New Haven Conn., 06035

APPENDIX 3: SPECIFICATION FOR REMOVAL NAME TAGS

The following removal name tags shall be applied only by the Government.

Removal Name Tag for Cables

The removal name tag for cables shall be made of plastic. The cable name shall be in compliance with Reference 3.

Material: Plastic Color: Red

Size: 1 1/8 inches x 7 inches
Top Row : REMOVE
Second Row : Cable name or name of power apparatus
Third Row : Contractor's Name and Contract Number

Similar To: "Write-On Pipe Markers", Style Number WRO-2, Seaton Name Plate Company, New Haven Conn., 06035

Removal Name Tag for Power Apparatus

The removal name tag for power apparatus shall be stencilled to the power apparatus. The removal name tag shall have a red background (minimum size of 3 inches by 9 inches) with black stencils: REMOVE. The minimum size of the stencils shall be 1 inch.

7350 May 22, 1996

TO: Distribution

FROM: 7350/Electrical Systems Manager

SUBJECT: High Voltage Electric Power System
Operating Instruction: HVEPS-OI-008
Application of Arc Proofing on High Voltage Cables

Attached is Revision 1 of the Operating Instruction, HVEPS-OI-008, Application of Arc Proofing on High Voltage Cables, which is effective this date.

Laszlo F. Zala, P. E.

Concurrence:

_____
Richard A. Danks P. E.
Chief, Facilities Operations Division

Distribution:
0500/W. F. Ford
0530/L. Wilkins
2800/
2810/
2850/R. R. Smalley
4130/J.E. Dockrill/EASC
7000/
7200/
7300/R. A. Danks P.E.
7300/D. R. Canfield
7310/J. A. Webb, Jr.
7311/H. J. Wroblewski
7320/.
7330/
7350/J. F. Torri P. E.
7370/D. L. Lehota
7370/R. P. Jones
7600/D. Larson
7601/M. Seaver
7620/R. M. Suhay
7650/D. Lauderdale, Jr.

APPLICATION OF ARC PROOFING ON HIGH VOLTAGE CABLES

The following requirements apply to new and revised high voltage cable installations at the Lewis Research Center. These requirements apply to high voltage cables installed in substations, power manholes, cable tunnels and cable trays in buildings.

Fire proofing of high voltage electric power cables and cable apparatus at the Center is not required. Applying foam fire proofing (having a four hour fire rating) to cables and cable apparatus is prohibitively expensive for the degree of protection obtained. New cables installed at the Center contain insulation which do not support combustion: paper insulated lead and ethylene-propylene rubber; in addition, armored cables generally will not permit a self sustained fire to travel down the cable.

Arc proofing of high voltage cables and cable apparatus is required in the following applications:

a. Single phase and three phase cables (insulated or jacketed with poly-vinyl chloride).

b. Cable splices

Neither arc proofing or fire proofing of high voltage cables and cable apparatus is required in the following applications:

a. Cable risers installed as cable exits from substations; cable risers shall be protected by a rigid galvanized steel conduit.

b. Cable risers installed at power transformers in substations; cable risers shall be protected by a rigid galvanized steel conduit.

c. Cable risers installed at pad mounted transformers (generally having 2,400 Volt primaries); cable risers shall be protected by a rigid galvanized steel conduit.

d. Three phase cables (paper insulated, lead covered, cable oil filled or gas {nitrogen} filled), unless jacketed with poly-vinyl chloride.

e. Armored cables (both single phase and three phase), unless jacketed with poly-vinyl chloride.

f. Three phase and single phase cables insulated with ethylene-propylene rubber, unless jacketed with poly-vinyl chloride.

g. Cable heads at sectionalizing boxes.

h. Sectionalizing boxes.

The following materials are permissible for arc proofing high voltage cables and associated apparatus at the Lewis Research Center:

77 tape

Installation of any arc proofing or fire proofing materials in the high voltage electric power system, which contain even trace amounts of asbestos, requires written approval of the Power Systems Manager.

7340 June 8, 1992

TO: Distribution

FROM: 7340/Chief, Electrical Power Systems Branch

SUBJECT: High Voltage Electric Power System
Operating Instruction: HVEPS-OI-009
Procedure to Identify and Cut High Voltage Electric Cables

Operating instruction, HVEPS-OI-009, Procedure to Identify and Cut High Voltage Electric Cables, is effective this date. This procedure is required to be followed when cutting high voltage cables operating at nominal voltages of 34,500 Volts, 13,800 Volts, 6,900 Volts, 4,160 Volts or 2,400 Volts in power manholes, electrical cable tunnels, electrical cable rooms and in buildings where neither end of the cable is visible.

This operating instruction is not required to be used where one or both ends of the cable is visible or, in the event of a cable failure or cable splice failure where the identity of the failed cable is obvious.

The designee of the Electrical Power Systems Manager who shall be responsible for scheduling and managing the cutting of high voltage cables in accordance with this operating instruction is the Center's Contracting Officer's Technical Representative for the high voltage maintenance contract (COTR).

Joseph F. Torri P. E.

Concurrence:

Richard A. Danks,
Chief, Facilities Operations Division

HVEPS-OI-009
February 8, 1991

Concurrence (Continued):

Hugh A. Schoeffler
Chairman, Electrical Applications Safety Committee

Wilson F. Ford
Chief, Office of Mission Safety and Assurance

Distribution:
0150/W. F. Ford
0153/F. J. Greco
7000/D. J. Poferl
7300/R. A. Danks
7300/D. R. Canfield
7300/D. W. Newland
7310/J. A. Webb, Jr.
7311/H. J. Wroblewski
7320/J. M. Vega
7330/R. J. Horansky
7331/J. H. Norton
7340/J. F. Torri
7360/H. C. Craddock
7360/D. L. Lehota
7370/R. P. Jones
7600/D. J. Keliher
7601/D. J. Fridler
7620/H. A. Schoeffler
7620/H. A. Schoeffler/EASC
7650/E. J. Boitel

HVEPS-OI-009 1
February 8, 1991

PROCEDURE TO IDENTIFY AND CUT HIGH VOLTAGE ELECTRIC CABLES
in the High Voltage Electrical Power System

1.0 Introduction....2
- 1.1 Approval to Cut High Voltage Cables....2
- 1.2 Applicable Electric Power Cables....2
- 1.3 Overview....3

2.0 Designated Safety Person....3

3.0 Work on De-Energized Cables....3

4.0 Work Rules....3

5.0 Request to Cut Cables....4

6.0 Electrical Equipment Switching Orders....4

7.0 Identifying the Cable Prior to Switching....4

8.0 Switching and Tagging....5

9.0 Testing in Substations....6

10.0 Grounding a Cable....6
- 10.1 Grounding a Cable in an Air Insulated Substation or Metal Enclosed Switchgear....6
- 10.2 Grounding a Cable at a Transformer with no Open Air Insulated Bushings....7
- 10.3 Grounding a Cable at a Sectionalizing Box....8

11.0 Isolating a Cable in a Substation....8

12.0 Testing the De-Energized Cables in Power Manhole, Cable Tunnel or Cable Room....9
- 12.1 Testing with a Wayfinder....9
- 12.2 Testing with an Impulse Tester....10

13.0 Cutting a High Voltage Electric Cable
- 13.1 Approved Cable Cutting Equipment....11
- 13.2 Safety Requirements when Cutting a Cable....11
- 13.3 Setup of Cable Cutting Equipment....12

References....16

PROCEDURE TO IDENTIFY AND CUT HIGH VOLTAGE ELECTRIC CABLES

in the High Voltage Electrical Power System

1.0 Introduction

1.1 Approval to Cut High Voltage Cables

All high voltage electric power cables at the Center are under configuration control (Reference 1). Prior to cutting any high voltage cable, the Center's Technical Representative for the high voltage maintenance contract (TR), shall submit a Process Systems Change Request (PSCR) to the Electrical Power Systems Manager for approval. In an emergency, the TR may verbally request and receive approval from the Electrical Power Systems Manager to identify and cut a cable. However, within 72 hours, the TR shall submit the required PSCR.

1.2 Applicable Electric Power Cables

High voltage electric power cables subject to the requirements of this procedure are those cables which are operated at a nominal voltage of 34,500 Volts, 13,800 Volts, 6,900 Volts, 4,160 Volts or 2,400 Volts, rms, ac at a nominal frequency of 60 Hertz. In addition, this operating procedure applies to identifying and cutting high voltage cables in variable frequency systems, such as those operated in Building 23 and the Icing Research Tunnel.

A high voltage electric power cable is defined to be one contiguous section of cable which may contain one or more butt splices but contains no high voltage power apparatus, tee splices or sectionalizing boxes.

This operating instruction is required to be followed to identify and cut high voltage cables in power manholes, electrical cable tunnels, electrical cable rooms and in buildings where neither end of the cable is visible.

This operating instruction is **not** required to be used where:

a) one end of the cable can be observed from the location of the cut; or
b) the identity of the cable is obvious due to a cable failure or cable splice failure; and

for condition "a" or "b" above, both ends of the cable are grounded with NASA grounding cables applied in accordance with Part 8.0 of this procedure.

1.3 Overview

Only the support service contractor for high voltage maintenance at the Center is authorized to cut high voltage cables in power manholes, cable tunnels and cable rooms where neither end of the cable is visible.

Procedures presented in Sections 2.0 through 10.0 shall be used to identify cables in power manholes, tunnels and cable rooms.

Procedures presented in Sections 11.0 and 12.0 shall be used to isolate and verify the identification of the cable to be cut.

Procedures presented in Section 13.0 shall be used to cut a cable in power manholes, tunnels and cable rooms. No personnel are permitted within a power manhole, tunnel or cable room while a cable is being cut.

2.0 Designated Safety Person

The designee of the Electrical Power Systems Manager shall appoint the designated safety person (Reference 2) for each cable to be identified and cut in accordance with this operating instruction.

3.0 Work on De-Energized Cables

High voltage cables scheduled to be cut shall be de-energized prior to cutting. All personnel shall consider all high voltage cables or power apparatus to be energized until they personally verify that the circuit or power apparatus they are about to work on are de-energized. This verification shall be by direct test or visual observation of open breakers, open disconnect switches, open links at sectionalizing boxes and visible safety grounds. Prior to cutting a cable, each member of the work crew shall verify that the cable is de-energized (Reference 3).

4.0 Work Rules

All work to identify and cut high voltage electric cables shall be performed in compliance with:

A) National Electrical Safety Code, (Reference 4);

B) Lewis Operational Safety Manual, (Reference 5);

C) Electric Power Dispatchers: Electric Power Manholes and Cable Tunnels (Reference 6);

D) Switching orders of the Center's Electric Power Dispatcher.

5.0 Request to Cut Cables

The Contracting Officer's Technical Representative (COTR) of the high voltage maintenance contract at the Center shall make a written request to the Electric Power System Dispatcher for the required switching to de-energize, lockout and tagout a cable which is to be cut.

6.0 Electrical Equipment Switching Order

The Electric Power Dispatcher shall prepare a written Electrical Equipment Switching Order (NASA-C-128 Rev. 8-84) covering the step-by-step switching and tagging/lockout orders to be followed when de-energizing the subject cable. Prior to execution, the switching order shall be reviewed for accuracy, completeness and safety by another Electrical Power Dispatcher. Then, an Electric Power Dispatcher and the COTR shall together review the Switching Order. A copy of the Switching Order shall be provided to the COTR and to the crew which switches, tags out, and locks out power apparatus.

7.0 Identifying the Cable Prior to Switching

Several independent methods shall be used to identify that the selected cable is physically the cable to be cut.

The COTR, the foreman and all crew members of the contractor shall together identify the cable to be cut. For high voltage cables located in power manholes and cable tunnels:

7.1 The cable shall be identified using a minimum of two standard name tags (Reference 7):

7.1.a **Cables in a Manhole:** Two standard name tags of the cable shall be compared with the standard name tags of the cable **at adjacent manholes.**

7.1.b **Cables in Tunnels or Cable Rooms:** Two standard name tags of a cable exiting a tunnel or cable room at a cable duct shall be compared with the standard name tag affixed on the structure near the cable exit. In the event of discrepancies, the seal between the cable riser and the duct may be opened and water may be poured down the duct and the flow of water into the tunnel may be observed.

7.2 The physical location of a cable shall be compared with the location as shown on baseline drawings under Configuration Control (Reference 1.)

7.2.a **Cables in a Manhole:** The physical location of the cable in a manhole shall be compared with the locations of the cable as shown on baseline drawings of the manhole **and adjacent manholes.**

7.2.b **Cables in Tunnels or Cable Rooms:** The physical location of the entry **and exit** of a cable into a tunnel or cable room shall be compared with the location of the cable as shown in baseline drawings.

EVEN IF AGREEMENT IS COMPLETELY ACHIEVED, THE CABLE IDENTITY IS NOT VERIFIED.

8.0 Switching and Tagging

Switching, tagging and locking out the electric power system shall:

A) be performed prior to cutting the cable;

B) be under the direction of the Electric Power Dispatcher;

C) follow a step-by-step written Electrical Equipment Switching Order (Section 6.0); and

D) involve **all** personnel who will perform the actual identification, testing, verifying and cutting of the cable.

Note: The Electrical Equipment Switching Order may be mutually revised by consensus of all personnel involved in switching and tagging as currently practiced at LeRC.

9.0 Testing in Substations

When the cable has been de-energized and isolated from the high voltage system, the presence of voltage shall be tested at cable terminations at both ends of the cable. Prior to testing, the cable shall be isolated from known potential by a minimum of two opens (Reference 3.)

Testing shall be done at locations where the presence of potential may be detected directly on high voltage apparatus such as buses, disconnect switches, fused disconnects, power transformer secondaries, and open cable sectionalizing boxes.

The COTR and the contractor's work crew shall test the circuit for potential at both ends using a Tic Tracer or Noisy Tester in accordance with the following Hot-Dead-Hot procedure:

A) test a known live high voltage apparatus so all participants confirm the proper operation of the tester;

B) test the identified (de-energized) cable termination so all participants confirm the tester indicates no potential; and

C) re-test the known live high voltage apparatus so all participants confirm the proper operation of the tester.

When a power transformer is fed by the cable to be cut, the COTR and the contractor's work crew shall confirm the transformer is de-energized by loss of 120 Hertz hum and confirm the absence of potential using the Hot-Dead Hot test procedure with a Tick Tracer or Noisy Tester.

10.0 Grounding a Cable

Following successful testing of the absence of voltage at both ends of the cable, all three phases of the de-energized cable shall be grounded at both ends using approved grounding cables. When grounding a cable, the qualified high voltage switchman shall wear an approved Nomex suit, complete with hard hat and face shield, rubber gloves, and leather gloves.

10.1 Grounding a Cable in an Air Insulated Substation or Metal Enclosed Switchgear

All grounding cables shall be installed by a qualified switchman using the following procedure:

A) Attach one end of the grounding cable securely to a stranded copper conductor which is part of the substation grounding system;

B) Using an approved hot-stick carefully contact but do not attach the other end of the grounding cable to the lug of the de-energized cable to confirm that the phase is indeed de-energized;

C) Using an approved hot stick carefully and securely attach the other end of the grounding cable to the aerial lug of the phase just tested.

D) Using an approved hot stick carefully and securely attach the grounding cables to the other two phases.

10.2 Grounding a Cable at a Transformer with no Air Insulated High Voltage Bushings

All grounding cables shall be installed by a qualified switchman using the following procedure:

A) Attach one end of the grounding cable securely to a stranded copper conductor which is part of the grounding system for the power transformer;

B) Using an approved hot-stick carefully contact but do not attach the other end of the grounding cable to a lug of the de-energized cable at the transformer secondary or (if the transformer secondary is not accessible) the transformer side of the secondary main to confirm that the phase is indeed de-energized;

C) Using an approved hot stick carefully and securely attach the other end of the grounding cable to the point of contact (Section 9.2.B) at the transformer secondary or the transformer side of the secondary main;

D) Using an approved hot stick carefully and securely attach grounding cables to the other two phases at the transformer secondary or the transformer side of the secondary main;

10.3 Grounding a Cable at a Sectionalizing Box

All grounding cables shall be installed by a qualified switchman at a de-energized sectionalizing box using the following procedure:

A) Remove the cover of the sectionalizing box;

B) Using an approved hot stick, carefully remove the three links isolating the selected cable;

C) Attach one end of the grounding cable securely to a stranded copper conductor which is part of the grounding system for the sectionalizing box;

D) Using an approved hot-stick carefully con-

tact but do not attach the other end of the grounding cable to a lug of the de-energized cable at the sectionalizing box to confirm that the phase is indeed de-energized;

E) Using an approved hot-stick carefully and securely attach the other end of the grounding cable to the lug of the de-energized cable;

F) Using an approved hot-stick carefully and securely attach grounding cables to the lugs of the other two phases at the sectionalizing box.

11.0 Isolating a Cable in a Substation

Following the successful grounding of all phases at both ends of the cable, the three cable drops shall be removed from the de-energized cable in the substation. The cables shall then be cut in the substation using a portable hydraulically powered ram. The purpose of cutting the cable in the substation is to isolate the conductive shield or jacket from intentional grounds. The following procedures shall be used:

A) Paper Insulated Lead Covered Cable with a Spreader Head:

The three phases of the PILC shall be cut above the spreader head. The phase conductors, lead sleeves, cable terminations and NASA grounding cables shall be removed. The spreader head support at the cable riser shall be disconnected from its support thereby removing connections to ground.

B) Solid Dielectric Power Cable:

The three phases of the solid dielectric insulated electric cable shall be cut above the weather cap. The phase conductors, cable terminations and grounding cables shall be removed. The weather cap of the cable riser

shall be removed. The rigid galvanized steel riser shall also be removed. Any connections of the cable shield shall also be disconnected from ground.

12.0 Testing the De-energized Cable in a Power Manhole, Cable Tunnel or Cable Room

Two separate methods shall be used to identify the cable in a tunnel, power manhole or cable room: one method uses an instrument called a Wayfinder; the other method uses an instrument called an Impulse Tester.

12.1 Testing with a Wayfinder

The signal source of the Wayfinder shall be located in the substation at the cut terminus of the selected high voltage cable. Initially the conductive sheath of the selected cable shall be used as the test circuit.

With the signal source of the Wayfinder turned off, use a Wayfinder Tester in the power manhole, cable tunnel or cable room at the location of the cut to confirm that the cable identified is indeed de-energized. With the signal source of the Wayfinder Tester turned on, the detector of the Wayfinder Tester shall be used at the location of the proposed cut to confirm that the selected cable is indeed de-energized and is the cable selected to be cut.

A) Paper Insulated Lead Covered Cable with a Spreader Head:

Use the lead sheath of the cable as the active conductor for this test.

B) Solid Dielectric Power Cable with Cable Shield:

Use the conductor shield as the active conductor for this test.

C) Solid Dielectric Power Cable with no Cable

Shield:

Use one of the phase conductors as the active conductor for this test.

12.2 Testing with an Impulse Tester

A second independent test shall be used to verify that the cable identified in the tunnel is actually the de-energized cable to be cut. This test shall be performed using an Impulse Tester. The source of the tester shall be located in the substation yard and attached to the same active conductor as used for the test with the Wayfinder. The detector of the Impulse Tester shall be used at the location of the proposed cut to verify that the selected cable is indeed de-energized and is the cable selected to be cut.

In the event that the Wayfinder and the Impulse Tester provides inconclusive evidence; one of the three phase conductors shall be used as the active conductor for a repeat of both tests.

13.0 Cutting a High Voltage Electric Cable:

The COTR and the contractor 's work crew shall satisfy themselves that the cable selected is indeed the cable to be cut.

EVEN THEN, ALL PERSONNEL SHALL TREAT THE CABLE TO BE CUT AS ENERGIZED.

13.1 Approved Cable Cutting Equipment

A double acting hydraulically powered cutting ram, remotely operated by the COTR or the high voltage maintenance contractor, shall be used to cut high voltage cables. The device shall consist of the following:

A) A hydraulically powered cutting ram capable of cutting an entire cable in a single

action;

B) Hydraulic hoses capable of withstanding pressures used when cutting cables;

C) A hydraulic pump capable of delivering sufficient hydraulic fluid at the pressure required to completely cut the largest diameter cable within the rating of the cutter;

D) An emergency shutoff feature to completely release the hydraulic pressure as a result of malfunction of the unit; and

E) Electric power for the cable cutting equipment obtained from one of the following sources:

a) a portable engine/generator;
b) a 120 Volt ac outlet located in a cable tunnel, cable room, or power manhole which has a remote molded case circuit breaker.

F) A remotely operated switch capable of extending and retracting the cutter;

13.2 Safety Requirements when Cutting a Cable

When cutting a cable within a power manhole, cable tunnel or cable room where neither end of the cable is visible:

A) no personnel are permitted to be inside the power manhole, cable tunnel or cable room;

B) **all** manhole covers shall be removed with appropriate protective barriers installed around the open manholes,

C) all portable conductive wires and cables such as electric power and work lights passing through manholes shall be removed,

D) all adjacent cables shall be double wrapped with a heavy Nomex blanket.

13.3 Setup of Cable Cutting Equipment

A) In Power Manholes, Cable Tunnels, and Cable Rooms where 120 Volt ac power is available, the following procedure shall be performed under the direction of the designated safety person:

a) De-energize, tag and test to verify absence of potential at the 120 Volt ac supply;

b) Locate the hydraulic pump near the location of the cut and ground the pump;

c) Place the hydraulically powered cutting ram at the cable to be cut and secure the cutting ram to prevent damage to adjacent cables in the event a live cable is mistakenly cut;

d) Wrap protective Nomex blankets on adjacent cables (Section 13.2.D);

e) Plug in the power cord for the hydraulic pump into the de-energized 120 Volt ac supply;

f) Evacuate all personnel from the power manhole, cable tunnel or cable room and insure that all personnel are located a sufficient distance away from an open manhole, or point of entrance so that the effects of a blast from an electrical fault from mistakenly cutting a live cable would be rendered harmless;

g) Announce to all personnel that the cutting operation is about to begin;

h) The designated safety person (Section 2.0) shall verify the completion of the set-up of cable cutting equipment

and evacuation of all personnel.

i) At the remote molded case circuit breaker which provides power to the cable cutting equipment, temporarily remove the tag and using rubber gloves, close the circuit breaker for not more than 20 seconds;

j) Using rubber gloves, open the circuit breaker and wait for an additional 20 seconds and replace the tag;

k) Announce to all personnel that the cutting operation is complete;

l) Using the buddy system; one person, clothed in a protective Nomex suit shall, if possible, observe from the outside of the power manhole, cable tunnel or cable room the position of the cutting ram, or, if not possible to observe the position of the cutting ram, enter the power manhole, cable tunnel or cable room to observe the position of the cutting ram;

m) After visually verifying the position of the cutting ram is in the recessed position, test the cable cut for the presence of voltage using the hot-dead-hot technique;

n) After verifying the recessed position of the cutting ram and the absence of voltage, announce an "all-clear" to the work crew.

B) In Power Manholes, Cable Tunnels, and Cable Rooms where 120 Volt ac power is **NOT** available, the following procedure shall be performed under the direction of the designated safety person:

a) Install a portable personnel ground mat at a sufficient distance away from an open manhole, or point of entrance to a power manhole, cable tunnel or

cable room so that the effects of a blast from an electrical fault from mistakenly cutting a live cable would be rendered harmless, and effectively ground the mat to the grounding network inside the power manhole, cable tunnel or cable room using a single approved grounding cable;

b) Locate the hydraulic pump near the location of the cut and ground the pump;

c) Place the hydraulically powered cutting ram at the cable to be cut and secure the cutting ram to prevent damage to adjacent cables in the event a live cable is mistakenly cut;

d) Wrap protective Nomex blankets on adjacent cables (Section 13.2.D);

e) Place the engine/generator inside the cable tunnel or cable room or place the engine/generator on the surface of the ground near the open manhole;

f) Connect and bring the mushroom-capped remote switch to a suitable location about five feet from the ground mat;

g) Plug in the power cord for the hydraulic pump into the de-energized 120 Volt ac supply;

h) Evacuate all personnel from the power manhole, cable tunnel or cable room and insure that all personnel are located a sufficient distance away from an open manhole, or point of entrance so that the effects of a blast from an electrical fault from mistakenly cutting a live cable would be rendered harmless;

i) Announce to all personnel that the cutting operation is about to begin;

j) The designated safety person (Section

2.0) shall verify the completion of the set-up of cable cutting equipment and evacuation of all personnel.

k) Start the engine/generator;

l) Clothed in a heavy protective Nomex Suit and fully gloved, and while standing on the ground mat, use a hot stick to close the remote switch for not more than 20 seconds;

m) Open the remote switch and wait for an additional 20 seconds;

n) Announce to all personnel that the cutting operation is complete;

o) Using the buddy system; one person, clothed in a protective Nomex suit shall, if possible, observe from the outside of the power manhole, cable tunnel or cable room the position of the cutting ram, or, if not possible to observe the position of the cutting ram, enter the power manhole, cable tunnel or cable room to observe the position of the cutting ram;

p) After visually verifying the position of the cutting ram is in the recessed position, test the cable cut for the presence of voltage using the hot-dead-hot technique;

q) After verifying the recessed position of the cutting ram and the absence of voltage, announce an "all clear" to the work crew.

References:

1. Configuration Control, LMI 8820.1.

2. Designated Safety Persons, HVEPS-OI-012.

3. Work on or Near High Voltage Electrical Systems, HVEPS-OI-011,

4. National Electrical Safety Code, Part 3 and Part 4, ANSI-C2, current edition in effect.

5. Lewis Operational Safety Manual:
   a) 1701.B: Protection of Employees Buddy System
   b) 1733.1B: Eye Protection
   c) 1730.1A: Protective Clothing and Equipment
   d) 1705.1: Confined Spaces
   e) 1701.2C: General Safety and Health Requirements
   f) 1800.1: Hearing Conservation Program
   g) Chapter 6: Procedure for Electrical Applications
   h) Chapter 6A1: Electrical Fuses
   i) Chapter 14B: Asbestos

6. Electric Power Dispatchers: Electric Power Manholes and Cable Tunnels, HVEPS-OI-004.

7. Place Name Tags on Power Apparatus and Cables, HVEPS-OI-007.

7340 March 19, 1991

TO: Distribution

FROM: 7340/Chief, Electrical Power Systems Branch

SUBJECT: High Voltage Electric Power System
Operating Instruction: HVEPS-OI-010
Inverted Fused High Voltage Disconnect Switches

Operating Instruction, HVEPS-OI-010, Inverted Fused High Voltage Disconnect Switches, is effective this date. The basis of this procedure is the National Electrical Safety Code (ANSI-C2, current edition).

Joseph F. Torri P. E.

Concurrence:

_____
Richard A. Danks
Chief, Facilities Operations Division

_____
Hugh A. Schoeffler
Chairman, Electrical Applications
Safety Committee

_____
Wilson F. Ford
Chief, Office of Mission Safety
and Assurance

HVEP-OI-010
March 19, 1991

Distribution:
0150/W. F. Ford
0153/F. J. Greco
7000/D. J. Poferl
7300/R. A. Danks
7300/D. R. Canfield
7300/D. W. Newland
7310/J. A. Webb, Jr.
7311/H. J. Wroblewski
7320/J. M. Vega
7330/R. J. Horansky
7331/J. H. Norton
7340/J. F. Torri
7360/H. C. Craddock
7360/D. L. Lehota
7370/R. P. Jones
7600/D. J. Keliher
7601/D. J. Fridler
7620/H. A. Schoeffler
7620/H. A. Schoeffler/EASC
7650/E. C. Boitel

HVEP-OI-010 1
March 19, 1991

INVERTED FUSED HIGH VOLTAGE DISCONNECT SWITCHES

1.0 GENERAL

Ten (10) transformer primary fused disconnect switches of unusual inverted design have been installed in the Lewis 2.4 kV electrical power distribution system. The switch/transformer designation and location for each unit is shown in Table 1.

Each of these switches is mounted in a metal cabinet with the inverted switch located in the lower compartment and the fuses located in the upper compartment. The switch blade mechanism is mounted in the inverted position such that gravity would try to close the switch blades if all mechanical interlocks holding the blades open were to fail. The design and construction details of these switches have been reviewed in depth and are deemed sufficient to preclude failure to the closed position. While the mechanical and electrical characteristics of these switches are adequate for use on the Lewis power system, their unusual configuration warrants special safety considerations for operating personnel.

The 2.4 kV supply to cabinets housing inverted fused high voltage disconnect switches enters through the bottom compartment. When the inverted switch has been opened, high voltage (2.4 kV) may be present at the cable terminals and the clips of the inverted switch at the bottom of the compartment. This represents a significant departure from normal where such potentials may normally be present only at the top of the upper compartment.

2.0 QUALIFICATIONS OF HIGH VOLTAGE SWITCHMEN

Only high voltage switchmen qualified by the Center may operate inverted fused primary disconnect switches, remove 2.4 kV fuses, or install 2.4 kV fuses in inverted primary fused disconnect switch cabinets. Such personnel shall meet the following requirements:

A.) Be qualified as high voltage operators;

B.) Be trained on the following:

i) hazards associated with inverted and bottom fed primary fused disconnect switches;

ii) proper procedure to isolate high voltage apparatus connected to the switch;

iii) restrictions in applying personnel protective grounds at bottom fed switch compartments;

iv) proper storage of fuses inside the metal cabinets; and

v) the contents of this operating instruction

C.) The name of the qualified high voltage switchmen shall be included on a list maintained by the Chief, Systems Operations Office.

3.0 TWO OPEN REQUIREMENT FOR ISOLATING POWER APPARATUS CONNECTED TO THE LOAD SIDE OF AN INVERTED FUSED DISCONNECT SWITCH

When isolating power apparatus connected to an inverted fused disconnect switch, **two** electrical opens are required to preclude the fail to close hazard.

When isolating power apparatus connected to an inverted fused disconnect switch, an open switch and removed fuses constitute a **single** open. Another device (circuit breaker, removal of links in a sectionalizing box, etc.) must be opened in series with the inverted switch to meet the two open requirement for isolating power apparatus.

Protective safety grounds as required by the National Electrical Safety Code (Reference 1) shall not be installed within the inverted switch cabinet.

4.0 REMOVING FUSES

To remove or replace a 2.4 kV fuse from an inverted primary fused disconnect switch the following procedure shall be used:

A.) Prior to opening the door of the metal cabinet, the switch must be opened to release the mechanical interlock on the door. However, since this switch is mounted in an inverted position, the open switch does not constitute an electrical open to the source of potential. The switch shall be tagged open.

B.) The secondary main of the transformer shall also be opened and tagged.

C.) To remove a 2.4 kV fuse, procedures similar to removing an energized fuse shall be followed. The qualified high voltage switchman shall be clothed in a heavy protective Nomex Suit, wear 5 kV (minimum) safety gloves and leathers, wear a face shield with a hard hat and use a hot stick fuse puller.

5.0 SWITCHING ORDER REQUIREMENTS

Scheduled switching of inverted high voltage fused disconnect switch/ transformer units shall be performed under the direction of a Lewis Electric Power Dispatcher using an Electric Equipment Switching Order (Reference 2).

6.0 ONE LINE DIAGRAMS

Electrical One Line Diagrams shall be revised to clearly identify the type and locations of inverted fused high voltage disconnect switch installed. For inverted fused disconnect switches, the words "BOTTOM FED" shall be placed near the drawing symbol and immediately below the transformer name.

7.0 STANDARD NAME TAG AND LABEL REQUIRED ON CABINETS

On each metal enclosed cabinet housing a bottom fed fused disconnect switch, a standard name tag (Reference 3) depicting the name of the transformer fed from the disconnect switch shall be applied on the door.

Immediately below the standard name tag, the label "BOTTOM FED" shall be added. The size of this label shall be approximately the same size as the standard name tag, have a bright yellow background and black stencilled letters.

REFERENCES:

1. National Electrical Safety Code, ANSI-C2, current edition.

2. New and Modified Electrical Systems, HVEPS-OI-013.

3. Place Name Tags On Power Apparatus and Cables, HVEPS-OI-007.

TABLE 1

SUMMARY OF INVERTED FUSED DISCONNECT SWITCHES AT LeRC

Transformer Name		Installation	Location	
Old	**New**	**Date**	**Bldg #**	**Room Number, etc.**

HVEP-OI-010 4
March 19, 1991

F1A1	FIA1	02/11/91	23	WEST WING BASEMENT US#11
F1A2	F1A2	02/11/91	23	WEST WING BASEMENT US#12
EG1C	GEM1C1C	02/18/91	53	BASEMENT MOTOR EQUIP ROOM 12
B2F1C2	BEF1B3	02/18/91	53	BASEMENT MOTOR EQUIP ROOM 12
EG1A2	GEM1C1A2	02/18/91	54	BASEMENT ROOM #18
EG1B	GEM1C1B	02/18/91	57	BASEMENT SWITCHGEAR ROOM
K1B2A	K1B2A	12/18/90	87	BASEMENT SWITCHGEAR ROOM
K2B2	K2B2	12/20/90	87	BASEMENT SWITCHGEAR ROOM
K1B1	K1B1	12/18/90	90	1ST FLOOR SWITCHGEAR ROOM
K2B1	K2B1	12/20/90	90	1ST FLOOR SWITCHGEAR ROOM

7340 January 29, 1993

TO: Distribution

FROM: 7340 / Chief, Electrical Power Systems Branch

SUBJECT: High Voltage Electric Power System
Operating Instruction: HVEPS-OI-011
Work On or Near High Voltage Electrical Systems

The following High Voltage Electric Power System Operating Instruction, HVEPS-OI-011, *Work On or Near High Voltage Electrical Power Systems*, is effective this date.

Joseph F. Torri, P.E.

Concurrence:

_____
Richard A. Danks,
Chief, Facilities Operations Division

_____
Hugh A. Schoeffler
Chairman, Electrical Applications Safety Committee

_____
Wilson F. Ford

HVEPS-OI-011
January 29, 1993

Chief, Office of Mission Safety and Assurance

Distribution:

0150 / W. F. Ford
0153 / F. J. Greco
2800 / F. J. Kutina
2810 / J. W. Schaefer
2850 / R. W. Smalley
7000 / D. J. Poferl
7200 / J. R. Zelley
7300 / R. A. Danks P. E.
7300 / D. R. Canfield
7303 / H. J. Wroblewski
7304 / J. H. Norton
7310 / J. A. Webb, Jr.
7320 / J. M. Vega P. E.
7330 / R. J. Horansky
7340 / J. F. Torri P. E.
7360 / H. C. Craddock
7360 / D. L. Lehota
7360 / V. D. Parrish
7370 / R. P. Jones
7600 / D. J. Keliher P. E.
7601 / D. J. Fiedler
7620 / H. A. Schoeffler
7620 / H. A. Schoeffler (EASC)
7650 / E. J. Boitel
PECO / M. C. Casselberry

HVEPS-OI-011 i
January 29, 1993

WORK ON OR NEAR HIGH VOLTAGE ELECTRICAL SYSTEMS

1.0 General Requirements for Isolating and Grounding High Voltage Power Apparatus 1

2.0 High Voltage Electrical Isolation Devices 2
2.1 Circuit Breakers and Circuit Switcher 2
2.1.1 138 kV, 34.5 kV and 13.8 kV Breakers 2
2.1.2 6900 Volt, 4160 Volt and 2400 Volt Breakers 2
2.1.2.a Removable Circuit Breakers 2
2.1.2.b Non-removable Circuit Breakers 3
2.2 High Voltage Disconnect Switches 3
2.2.1 At Breakers and Single Cable Exits 3
2.2.2 At Multiple Cable Exits 3
2.2.2.a Disconnect Switches Mounted in the Inverted Position 4
2.2.2.b Disconnect Switches Mounted in the Upright Position 4
2.3 Sectionalizing Boxes 5
2.4 Fused Disconnect Switches 5
2.4.1 Top Fed Upright Fused Primary Disconnect Switches 5
2.4.1.a Load Break Switches 5
2.4.1.b No-Load Break Switches 5
2.4.2 Bottom Fed Inverted Primary Disconnect Switches. 6
2.4.3 Top Fed Fused Disconnect Switches 6
2.4.4 Oil Filled Primary Fused Disconnects 6
2.4.5 Oil Filled Fused Cutouts 6
2.5 Fuses for Primaries of Potential Transformers 7
2.6 Motor Starters and Motor Starting Contactors 7

3.0 Special Switching Requirements 7
3.1 Two Open Requirement for Isolating and Grounding a High Voltage Bus 7
3.2 Two Open Requirement for Isolating Bus Tie Breakers 8
3.3 Two Open Requirement for Isolating and Grounding a High Voltage Power Transformer 8
3.3.1 General Requirements for Protective Grounds at Transformers 8
3.3.2 Special Requirements for Removing Protective Tape 8
3.4 Special Requirements for 34.5 kV Breakers for 8x6 9

4.0 Applications of Protective Grounds 9
References 10

WORK ON OR NEAR HIGH VOLTAGE ELECTRICAL SYSTEMS

All employees and contract personnel at the Lewis Research Center shall consider all high voltage systems, power apparatus, cables and overhead lines to be energized until they personally verify that the circuit or equipment they are about to work on or near is de-energized. This verification shall be by direct test and visual observation of electrical opens, such as open circuit breakers, open disconnect switches, or open links in sectionalizing boxes, and visible safety grounding conductors. These requirements do not preclude working near energized facilities provided proper safety precautions are observed.

Minimum safety rules for safeguarding employees during the installation, operation or maintenance of high voltage electric supply and communication lines and their associated equipment are established by the National Electrical Safety Code (Reference 1). This safety code shall be followed for all work on the Lewis Research Center's high voltage electrical power systems and on communication systems where they parallel electrical power lines on the same support structures.

1.0 General Requirements for Isolating and Grounding High Voltage Power Apparatus

The general requirement for working on high voltage power apparatus such as transformers, breakers, switches, cables and accessories shall be to provide:

A) two electrical opens on all sources of potentials **including backfeeds**,
B) one electrical open on **potential transformers** and
C) a minimum of one safety ground at the worksite or separate grounds on either side of the worksite in accordance with the National Electrical Safety Code (Reference 1), Rule 445.

All electrical opens shall be tagged; in addition, all electrical opens shall be locked in the open position at all locations where suitable locking devices are provided. All personnel protective grounds shall be tagged.

This general requirement, called "two opens," shall be the Center's objective and shall be met in the majority of Electrical Equipment Switching Orders to isolate high voltage power apparatus. Exceptions to this general requirement shall be approved by the Electrical Power Dispatcher.

When cable equipment is required to be de-energized, such as when other work is performed near cable equipment, a single open to all sources of potential including backfeeds, is required, such as an open breaker (with control power disconnected) or an open disconnect switch (locked in the open position) to all sources of potential including backfeeds. In this case, the application of protective grounds are optional.

2.0 High Voltage Electrical Isolation Devices

2.1 Circuit Breakers and Circuit Switchers

2.1.1 138 kV, 34.5 kV and 13.8 kV Breakers

When circuit breakers or circuit switchers are used to isolate high voltage power apparatus, the device shall be opened, the control power disconnect at the breaker shall be opened, access to the control compartment shall be locked where available and Electrical Isolation Tags shall be applied to the cubicle containing the breaker mechanism and the control power switch at the breaker.

For circuit breakers and circuit switchers controlled through SCADA by the Electric Power Dispatchers, electronic tags shall be set in the SCADA (Distributed Control System, DCS) computer and notice of the tags shall be applied on the system mimic board at the Electric Power Dispatch Office (EPDO). All the above shall constitute a single open.

Note: An Electrical-Do Not Operate Tag shall be placed on all breaker control switches (at the substation and remote locations) when the following or similar types of work will be performed on the breaker:

a. Any work on the breaker control mechanism;
b. Any work on the dc control/relaying wiring; or
c. Any work on the current transformer or potential transformer secondaries for relaying and metering associated with the breaker.

or at the request of the Electrical Power Dispatcher, the COTR of the high voltage maintenance contract or personnel of the high voltage maintenance contract involved with the switching or the work.

2.1.2 6900 Volt, 4160 Volt and 2400 Volt Breakers

2.1.2.a Removable Circuit Breakers

Circuit breakers, rated for operation at 6900 Volts, 4160 Volts or 2400 Volts may be removable. For these type of breakers, the breaker shall be opened, the breaker shall be cranked down in the isolation position (not the test position), the control power disconnect at the breaker shall be opened, access to the breaker and control compartments shall be locked where available and Electri-

cal Isolation Tags shall be applied to the compartment containing the breaker, the breaker control power disconnect switch and all remotely located breaker control switches. For circuit breakers controlled through SCADA (DCS) by the Electric Power Dispatchers, electronic tags shall be set in the SCADA (DCS) computer and notice of the tags shall be applied on the system mimic board at the Electric Power Dispatch Office (EPDO). All the above shall constitute two opens.

2.1.2.b Non-removable Circuit Breakers

Other circuit breakers, rated for operation at 6900 Volts, 4160 Volts or 2400 Volts may not be removable. For these type of breakers, the breaker shall be opened, the control power disconnect at the breaker shall be opened, access to the breaker and control compartments shall be locked where available and Electrical Isolation Tags shall be applied to the compartment containing the breaker, the breaker control power disconnect switch and all remotely located breaker control switches. For such circuit breakers controlled through SCADA (DCS) by the Electric Power Dispatchers, electronic tags shall be set in the SCADA (DCS) computer and notice of the tags shall be applied on the system mimic board at the Electric Power Dispatch Office (EPDO). All the above shall constitute one open.

2.2 High Voltage Disconnect Switches

2.2.1 At Breakers and Single Cable Exits

When a high voltage disconnect switch is used to isolate power apparatus, the disconnect switch shall be opened, locked in the open position and an Electrical Isolation Tag shall be applied at the operating handle. When the disconnect switch is displayed on the SCADA (DCS) screen, an electronic tag shall be set in the SCADA (DCS) computer. All the above shall constitute a single open.

2.2.2 At Multiple Cable Exits

Achieving the two open requirement where more than one cable exit (each having a cable disconnect switch) is controlled by one circuit breaker may be accomplished using one of several procedures.

2.2.2.a Disconnect Switches Mounted in the Inverted Position

Since these inverted disconnect switches present electrical hazards to qualified operators, refer to Reference 2 for special operating and switching requirements

2.2.2.b Disconnect Switches Mounted in the Upright Position

When more than one cable-exit from a substation is controlled by one circuit breaker and each cable has a cable disconnect switch, the disconnect switch shall be opened and locked in the open position, the cable shall be grounded in the substation, and Electrical Isolation Tags shall be applied at the operating handle of the disconnect switch and at the grounding apparatus. When the disconnect switch is displayed on the SCADA (DCS) screen, an electronic tag shall be set in the SCADA (DCS) computer. All the above shall constitute two opens. Note: The local ground of the cable in the substation does NOT constitute a safety ground as required by the National Electrical Safety Code.

A second means of isolation is generally required when safely implemented at multiple cable exits controlled by one circuit breaker as required by Section 1.0. The cable drop from the disconnect switch to the cable shall be removed after isolating the cable with two electrical opens. This procedure will temporarily result in a scheduled outage of other high voltage cables served by the circuit breaker. Following removal of the cable drop between the disconnect switch and the termination of the cable to be isolated, disconnect switches for other cables served by the circuit breaker may be closed and the breaker closed. This procedure will result in a cable isolated by its upright mounted cable disconnect switch and the removed cable drop. When the disconnect switch is displayed on the SCADA (DCS) screen, an electronic tag shall be set in the SCADA (DCS) computer. In this example, the isolation constitutes two opens.

However in certain applications, even following the procedure of

the above paragraphs, cable drops may not be able to be safely removed due to their age or proximity to nearby energized buswork. In such applications, the Electric Power Dispatcher and the COTR of the high voltage maintenance contract shall approve the isolation requirements.

2.3 Sectionalizing Boxes

When the removal of link(s) from a sectionalizing box is used to isolate power apparatus, the link(s) shall be removed with the circuit de-energized, the cover shall be secured and an Electrical Isolation Tag shall be applied at the sectionalizing box. When the sectionalizing box is located in an area accessible to personnel unqualified to work on the sectionalizing box, the cover of the sectionalizing box shall **locked**. All the above shall constitute two opens.

Note: The policy of LeRC is to open the links of a de-energized sectionalizing box.

2.4 Fused Disconnect Switches

Load break fused disconnect switches at the Center may be safely operated when carrying electrical loads.

Non load break fused disconnect switches at the Center may be operated when energized but not carrying electrical loads other than transformer magnetizing currents. Load side isolating devices, such as transformer secondary mains, motor starters or contactors, must be opened prior to opening no load break fused disconnect switches.

2.4.1 Top Fed Upright Fused Primary Disconnect Switches

Top fed upright fused primary disconnect switches are used to isolate many 2400 Volt power transformers at the Center.

2.4.1.a Load Break Switches

When a load-break primary disconnect switch is used to isolate power apparatus, the switch shall be opened, the three fuses shall be removed, the cabinet door shall be closed, the operating handle

shall be locked in the open position and Electrical Isolation Tags shall be applied at the operating handle of the switch. All the above shall constitute two opens.

2.4.1.b No-Load Break Switches

When a no-load-break primary disconnect switch is used to isolate power apparatus, either the secondary (low voltage) main breaker of the transformer or the electric supply to the switch shall be opened, the switch shall be opened, the three fuses shall be removed, the cabinet door shall be closed, the operating handle shall be locked in the open position and Electrical Isolation Tag shall be applied at the operating handle. All the above shall constitute two opens.

2.4.2 Bottom Fed Inverted Primary Disconnect Switches

Several bottom fed inverted primary disconnect switches have been installed at the Center to isolate 2400 Volt power transformers. Since these inverted designs present electrical hazards to qualified operators, refer to Reference 2 for special operating and switching requirements.

2.4.3 Top Fed Fused Disconnects

Top fed fused disconnects are applied to 2400 Volt motor starters at many locations at the Center. When a top fed fused disconnect is used to isolate a motor starter, the motor starter shall be opened, the three associated power fuses shall be opened and removed, the cabinet shall be closed and locked with the fuses removed and an Electrical Isolation Tag shall be applied at the cabinet handle of the switch compartment. All the above shall constitute two opens.

2.4.4 Oil Filled Primary Fused Disconnects

Oil filled primary fused disconnects are applied to some 2400 Volt primaries of transformers at the Center. Oil filled primary fused disconnects, due to their design and age, shall **NEVER** be used to open an electrical load. Prior to opening a load carrying oil filled primary fused disconnect, either the transformer secondary main breaker or a source side break shall

be opened. The oil filled primary fused disconnect may then be used to isolate high voltage power apparatus. At that time, a hot-dead-hot test using a Tick Tracer may be used to determine the effectiveness of the isolation of the oil filled disconnect and the secondary main. If the circuit is deemed to be de-energized by this test, then the opened oil filled fused disconnect and the opened secondary main shall constitute two opens.

2.4.5 Oil Filled Cutouts

Oil filled cutouts are applied to many 2400 Volt primaries of transformers. Oil filled cutouts, due to their design and age, shall **NEVER** be used to open an electrical load. Prior to opening a load carrying oil filled cutout, either the transformer secondary main breaker or a source side break shall be opened. At that time, a hot-dead-hot test using a Tick Tracer may be used to determine the effectiveness of the isolation of the oil filled cutout and the secondary main. If the circuit is deemed to be de-energized by this test, then the opened oil filled cutout and the opened secondary main shall constitute two opens.

2.5 Fuses for Primaries of Potential Transformers

Potential transformers and station power transformers may be protected by fuses in either the primary windings or secondary windings. When isolating buses, all potential sources of back feeds including potential transformers and station power transformers, shall be opened. These primary fuses may be opened or closed using established Center procedures when the bus is energized. Connected backfeeds of potential transformer secondaries, including auto-throw-overs for station power transformers and emergency bus supplies, shall be effectively isolated.

2.6 Motor Starters and Motor Starting Contactors

When a removable motor starter or contactor is used to isolate high voltage cables and motors, the starter or contactor shall be opened, the control power shall be opened where possible, access to the control compartment shall be closed and locked when possible and Electrical Isolation Tags shall be applied to the cubicle handle, the control power isolation device(s), and all remotely located control switches. When the starter or contactor can be cranked down, all the above procedure shall constitute two opens. When the starter or contactor

cannot be cranked down, all the above procedure shall constitute one open.

3.0 Special Switching Requirements

3.1 Two Open Requirement for Isolating and Grounding a High Voltage Bus

When work is to be performed on a high voltage bus, the bus shall be isolated with two opens to all sources of potential including backfeeds. All potential transformers connected to that bus shall be isolated with a minimum of one open, either on the primary or the secondary winding of the potential transformer. All electrical opens shall be tagged.

Protective grounds shall be applied to the bus either on each side of the work location or at the work location per Reference 1, Rules 444 and 445.

3.2 Two Open Requirements for Isolating Bus Tie Breakers

To meet the two open requirement to isolate the bus, bus tie breakers may be either:

A) opened (Section 2.1.2) and removed for servicing or

B) opened (Section 2.1.1) and both breaker disconnect switches opened (Section 2.2) and personnel safety grounds applied to all high voltage bushings of the breaker.

3.3 Two Open Requirement for Isolating and Grounding a High Voltage Power Transformer

When work is to be performed on a high voltage power transformer (having primary voltages of 550 Volts or higher), two opens are required on connections to all windings of the transformer, including transformer tertiary windings. The location of the two opens shall be determined by the COTR of the support service contractor for high voltage maintenance at the Center and the Electrical Power Dispatcher.

3.3.1 General Requirements for Protective Grounds at Transformers

At power transformers, protective grounds shall be applied to un-switched connections to the power system, such as:

A) the direct connected bus work;

B) the cable exits at the isolated transformer;

C) at the remote terminal of the connected cable exiting the transformer.

3.3.2 Special Requirements for Removing Protective Tape

When it is necessary to remove protective tape from connections to access the high voltage source for the purpose of providing a second open and/or attaching protective grounds, all the following special safety procedures are required:

A) Where possible, two opens are required on all sources of potential to the transformer; at other windings one open is required;

B) Verification of the loss of potential at the transformer is required by two means: i) loss of 120 Hertz hum and ii) test for loss of potential using a Tic Tracer or Noisy Tester with the hot-dead-hot procedure described in Reference 3;

C) Protective grounds shall be applied to at least one un-switched connection to the isolated power transformer windings;

D) The tape may then be removed; however no other work is permitted on the transformer itself until the grounds are applied to all sources of potential;

E) For the purpose of electrical testing of the transformer, the transformer may be electrically disconnected at the exposed terminals. Protective grounds shall be applied to the isolated electrical sources of the transformer and the protective grounds on the windings of the transformer (Section 3.3.2.C above) may then be removed.

3.4 Special Requirements for 34.5 kV Breakers for 8x6 SWT

At Substation G, three breakers, RG2D, RG2E and RG2F serve three power transformers, G1, G2 and G3 for the 8x6 supersonic wind tunnel main drive motors. When isolating these three transformers, 6,900 Volt cables and motors, the following procedure shall be followed:

A) Isolate, switch, tag, lock out and ground the transformer, cable and motors in accordance with Section 2.1.1;

B) Isolate and tag the primary or secondary winding of both sets of potential transformers connected to the leads of the motors;

C) Restore and apply a tag to the control power to breakers RG2D, RG2E and RG2F (required for operating the motor space heaters.)

4.0 Applications of Protective Grounds

Protective grounds shall be applied in accordance with the grounding provisions of Reference 1.

Prior to applying protective grounds, a hot-dead-hot test, using a testing device rated for the application, shall be made at the exact point of the intended protective ground. Positive verification of de-energized apparatus shall be demonstrated. If positive verification cannot be demonstrated, such as in the case of 2,400 Volt bus instrument transformers in pull-out drawers, then protective grounds are not permitted to be applied at that point.

References:

1. National Electrical Safety Code, ANSI C2-1990.

2. Inverted High Voltage Fused Disconnect Switches, HVEPS-OI-010.

3. Procedure to Identify and Cut High Voltage Cables, HVEPS-OI-009.

DISK: D:\WORKAREA
DIRECTORY: HVEPSOI
FILE: 11HVHOT.NEW

7340 March 19, 1991

TO: Distribution

FROM: 7340/Chief, Electrical Power Systems Branch

SUBJECT: High Voltage Electric Power System
Operating Instruction: HVEPS-OI-012
Designated Safety Person

Operating Instruction, HVEPS-OI-012, Designated Safety Person, is effective this date with the following exception:

> The requirement that a designated safety person be a Category II certified high voltage electrician shall be effective January 1, 1992.

The basis of this procedure is the National Electrical Safety Code (ANSI-C2, current edition).

Joseph F. Torri P. E.

Concurrence:

_____
Richard A. Danks
Chief, Facilities Operations Division

_____
Hugh A. Schoeffler
Chairman, Electrical Applications Safety Committee

_____
Wilson F. Ford
Chief, Office of Mission Safety and Assurance

Distribution:

0150/W. F. Ford
0153/F. J. Greco
7000/D. J. Poferl
7300/R. A. Danks
7300/D. R. Canfield
7300/D. W. Newland
7310/J. A. Webb, Jr.
7311/H. J. Wroblewski
7320/J. M. Vega
7330/R. J. Horansky
7331/J. H. Norton
7340/J. F. Torri
7360/H. C. Craddock
7360/D. L. Lehota
7370/R. P. Jones
7600/D. J. Keliher
7601/D. J. Fridler
7620/H. A. Schoeffler
7620/H. A. Schoeffler/EASC
7650/E. C. Boitel

DESIGNATED SAFETY PERSON

1.0 APPLICATION..... 2

2.0 GENERAL.....2

2.1 Responsibilities of Designated Safety Persons 2

2.2 Responsibilities of Supervisors of Work Crews.....3

2.3 Responsibilities of Each Employee.....4

2.4 Responsibilities of the Contracting Officer's Technical Representative or Technical Representative for the Work Crew.....4

3.0 WORK COVERED..... 4

References.....5

Table 6

DESIGNATED SAFETY PERSON

1.0 APPLICATION

This operating instruction shall be followed in the high voltage electric power systems at the Center including research test cells which include all electrical systems operating at a nominal frequency of 60 Hertz, and operating at nominal voltages of 550 volts and above and includes Variable Frequency Systems in Building 23 and the Icing Research Tunnel.

2.0 GENERAL

The designated safety person shall be certified as a Category II high voltage electrician by the Lewis Research Center (Reference 1.) Either the Contracting Officer's Technical Representative (COTR) or the Technical Representative (TR) for the contractor performing the work (Section 3.0) shall appoint the designated safety person. The COTR or TR shall identify the designated safety person to the Electric Power Dispatcher, who shall log the name of the designated safety person and the nature of the work as described in Section 3.0.

A designated safety person may be required for either electrical or non-electrical work (Section 3.0).

Appointment of a designated safety person does not relieve the COTR or TR or the work crew supervisor from their responsibilities for the safety of the work crew. The designated safety person assists the COTR, TR and the work crew supervisor in executing those responsibilities.

2.1 Responsibilities of Designated Safety Persons

A designated safety person shall establish boundaries for safe work areas, install safety flags clearly designating those safe work areas and inform the COTR or TR, supervisor of the work crew and all workers accordingly. These safe work areas shall provide an adequate margin of safety to assure that minimum working distances, specified in Table 1, are maintained.

A designated safety person is responsible for limiting the movement of personnel or equipment to prevent electrical contact accidents. While observing workers, a designated safety person shall wear a **yellow** identification vest, in addition to the required personal safety equipment.

A designated safety person shall take a suitable position and shall give his/her **undivided** attention to the work to insure that no action on the part of the workmen being observed can result in violation of the minimum work distances as specified in Table 1. The designated safety person and all workers observed must have a clear understanding as to when the designated safety person begins and ends the observation.

If the designated safety person must leave the assigned work area, the designated safety person shall first make sure that all workers are in the clear and shall remain in the clear of high voltage facilities until the designated safety person either returns or is replaced.

A designated safety person is authorized to and shall stop work which the designated safety person considers:

A) to be electrically hazardous;

B) to be inconsistent with the safety and health standards, national consensus standards or NASA/LeRC requirements as described in Reference 2; or

C) in violation of the safety permit of the Electrical Applications Safety Committee.

Any such work stoppage shall immediately be brought to the attention of the cognizant contract COTR or TR.

2.2 Responsibilities of Supervisors of Work Crews

Supervisors of work crews have the ultimate responsibility for the safety of the crew(s) he/she supervises. The designated safety person only assists the supervisor in executing that responsibility.

Supervisors of work crews shall plan and arrange their work in such a manner that each job may be accomplished with the least hazard to employees, other persons including the public, and to facilities. Supervisors shall advise each member of the work crew of any unusual hazards involved in the employee's part of the work and of all precautions which shall be observed.

Supervisors in charge of any non-electrical work crew have the responsibility to arrange for sufficient number of designated safety persons for the protection of all personnel involved. Supervisors shall arrange for the designation of all necessary safety persons with the COTR or TR.

Prior to the start of work, supervisors in charge of either electrical or non-electrical work shall explain to the COTR or TR and the designated safety person the nature and scope of the work to be performed.

2.3 Responsibilities of Each Employee

Each member of the work crew shall personally insure his/her self that he/she thoroughly understands the work to be accomplished, the employee's personal part of the work to be accomplished, the potential hazards the employee will be exposed to in performing the work, and the necessary safety precautions required to be followed when performing the work.

2.4 Responsibilities of the Contracting Officer's Technical Representative or Technical Representative for the Work Crew

The COTR or TR for the work crew shall be responsible assure that all required safety permits are in effect prior to the start of work.

The COTR or TR for the work crew shall be responsible for:

A) Appointing the designated safety person(s),

B) Notifying the Electric Power Dispatcher of the name(s) of the designated safety person(s);

C) Insuring that the work performed is in compliance with safety and health standards, national consensus standards and NASA/LeRC requirements as described in Reference 2 and

D) Complying with the safety permit from the Electrical Applications Safety Committee.

Certified designated safety persons may be appointed from the contractor of the COTR or TR or may be obtained from the COTR of the support service contractor for high voltage maintenance with a minimum of 5 work days notice.

3.0 WORK COVERED

This operating instruction applies to the following scheduled work:

a) Switching, isolating, tagging, locking out and grounding of high voltage power apparatus;

b) Performing the following tests on power apparatus: meggar tests, polarization index tests, dielectric absorption tests, Doble tests, power factor tests, AC hi-pot tests, DC hi-pot tests or other tests where test potentials in excess of 600 volts (AC or DC) are applied to power apparatus;

c) Entering or working in electric substations and control houses including non-

electrical work (such as but not limited to site visits, painting, roofing of control houses, adding gravel to substations, weed control, drilling, repairing fences);

d) Operating or moving motor driven equipment in substations or transformer yards which are not guarded or barricaded in accordance with specific requirements of a safety permit issued by the Electrical Applications Safety Committee;

e) Entering or working in the following confined spaces: power manholes, electric cable tunnels, electric cable rooms, and transformer vaults;

f) Opening of metal enclosed switchgear including low voltage compartments of power transformers;

g) Calibrating protective relays and meters and functional testing of control and relay systems;

h) For other work when required by the Electrical Applications Safety Committee.

References:

1. Certification of Personnel for Potentially Hazardous Operations, Lewis Operational Safety Manual, Chapter 1E.

2. New and Modified Electrical Systems, HVEPS-OI-013.

Table 1: Minimum Safe Work Distances from Air-Insulated High Voltage Apparatus

Nominal Operating Voltage	Minimum Work Distance (feet)	Minimum Hot-Stick Distance (feet)
2,400 Volts	6.00	4.00
4,160 Volts	6.00	4.00
6,900 Volts	8.00	8.00
13,800 Volts	8.00	8.00
34,500 Volts	10.00	8.00
138,000 Volts	12.00	12.00

Notes to Table 1:

1. Distances required by this table are measured radially from the energized apparatus AND radially from the bottom of station post insulators)

2. Reduction of these minimum distances shall be approved by the Electrical Applications Safety Committee.

3. A minimum hot stick distance is the closest separation for a qualified high voltage electrician while using a hot-stick.

NEW AND MODIFIED ELECTRICAL SYSTEMS

1.0 GENERAL

Lewis Research Center and the Plum Brook Station are served by the Cleveland Electric Illuminating Company and the Ohio Edison Company respectively. The point of service at each location is designated as Substation A. Power from each utility company is metered at 138,000 volts. NASA owns and operates the two electric power distribution systems downstream from each service point, including numerous separately derived high voltage systems.

All new or modified high voltage electrical power systems shall meet the minimum safety and health requirements established by the Code of Federal Regulations (CFR), recognized national safety codes, national consensus standards, NASA, and the Lewis Research Center. These requirements are summarized in Table 1. It is essential that all applicable requirements be followed in the engineering, design, installation, inspection, checkout, operation, maintenance and repair of high voltage electrical systems. Supervisors, managers, engineers, technicians, inspectors and workers are required to be knowledgeable of these requirements.

29CFR1960 mandates all federal agencies to follow all provisions of the Occupational Safety and Health Act (OSHA). This Act incorporates the National Electrical Code (NEC), ANSI/NFPA 70, to cover electrical installations. Therefore, the primary code covering electrical power system design shall be the National Electrical Code, ANSI/NFPA 70. In addition, the provisions of the National Electrical Safety Code, ANSI C2, covering the practical safeguarding of persons during the installation, operation, or maintenance of electric supply and communication lines and associated equipment shall be followed where appropriate, such as when work is required within substations.

Substantive changes to this document are identified by a vertical line in the left-hand margin.

2.0 Definitions

2.1 Accessible: (As applied to equipment.) Admitting close approach: not guarded by locked doors, elevation, or other effective means. (See "Accessible, Readily".)

2.2 Accessible, Readily: (Readily Accessible) Capable of being reached quickly for operation, renewal, or inspections, without requiring those to whom ready access is requisite to climb over or remove obstacles or to resort to portable ladders, chairs, etc. (See "Accessible".)

2.3 Disconnecting Means: A device, or group of devices, or other means by which the conductors of a circuit can be disconnected from their source of supply.

2.4 Distribution: Referring to 13,800 volt, 7,200 volt, 6,900 volt, 4,160 volt and 2,400

volt facilities in electric power systems.

2.5 Enclosure; The case or housing of apparatus, or the fence or walls surrounding an installation to prevent personnel from accidentally contacting energized parts.

2.6 Externally Operable: Capable of being operated without exposing the operator to contact with live parts.

2.7 Facility: Any building or structure designated by number at Lewis Research Center or Plum Brook Station.

2.8 Feeder: All circuit conductors between the service equipment or the source of a separately derived system and the final branch-circuit overcurrent device.

2.9 High Voltage: Electric power system and equipment operating above 600 volts.

2.10 Low Voltage: Electric power system and equipment operating at 600 volts or less.

2.11 Power Apparatus: High voltage electrical equipment including power transformers, voltage regulators, circuit breakers, circuit switchers, station power transformers, grounding networks (including grounding transformers, disconnect switches, and grounding resistors), disconnect switches, metal enclosed switchgear, capacitor banks, unit substations, and other similar power equipment.

2.12 Qualified Person: One trained for the operation of the equipment, familiar with the hazards involved and listed on an approved Qualified Operators List.

2.13 Separately Derived System: A premises wiring system whose power is derived from generator, transformer, or converter windings and that has no direct electrical connection to supply conductors, including a solidly connected grounded circuit conductor originating in another system.

2.14 Service Point: The point of connection between the facilities of the serving utility and the premises wiring (Substation A at both Lewis Research Center and Plum Brook Station).

2.15 Transmission: Referring to 138,000 volt and 34,500 volt facilities in electric power systems.

3.0 Process System Change Requests

High voltage electric power systems at the Center are under configuration control (Reference 1). A Process System Change Request (PSCR) is required for all scheduled configuration changes such as additions, modifications, replacements and deletions of power apparatus which change the One Line Diagrams of these electrical systems. Specific requirements for completing a PSCR are described in Reference 1.

4.0 Safety Permits from the Electrical Applications Safety Committee (EASC)

The Chair of the EASC has the authority to require a safety permit for work on or near high voltage electrical power systems at Lewis Research Center and Plum Brook Station. The EASC issues two types of permits: 1) operating safety permits and 2) construction safety permits.

4.1 An operating safety permit from the EASC is required for any high voltage electric power system operated as a utility system supplying multiple loads. Examples include the Lewis Research Center and Plum Brook power distribution systems and the ERB Variable Frequency Power System.

4.2 A construction safety permit from the EASC is required for scheduled:

A) Additions, modifications, replacements and deletions of power apparatus in the high voltage electrical power systems.

B) Electrical **and** non-electrical work performed in controlled areas associated with high voltage electrical power systems, such as substations, power manholes, high voltage cable tunnels, cable rooms, transformer vaults, wind tunnel and central process machinery electrical drives and high voltage electrical apparatus enclosed to prevent accidental contact of energized parts.

C) Work which will be performed on or in close proximity to exposed overhead high voltage conductors.

D) Work performed by contractors or sub-contractors of the Cleveland Electric Illuminating Company (CEI) or the Ohio Edison Company on equipment and facilities owned or maintained by these companies at Lewis Research Center and Plum Brook Station respectively.

Applications for a construction safety permit shall be made using NASA form C-923 following procedures in the Lewis Safety Manual. For Construction of Facilities projects, the Project Engineer is responsible for applying for a safety permit. For scheduled maintenance, replacement and modifications of power apparatus, either the Contracting Officer's Technical Representative (COTR) or the Technical Representative (TR) of the contractor performing the work shall apply for a safety permit. Application for safety permit shall be made a minimum of four (4) weeks prior to the planned start of work.

4.3 A construction safety permit from the EASC is not required for:

A) Electrical and non-electrical routine system maintenance and testing performed by qualified high voltage electricians (Reference 1)

employed by the Lewis Research Center or Plum Brook support service contractors (SSC) on power apparatus the SSC operates (such work is covered by the operating permits for these systems).

B) Scheduled and non-scheduled work performed by Cleveland Electric Illuminating Company (CEI) or Ohio Edison Company employees on equipment and facilities owned or maintained by these firms at Lewis Research Center and Plum Brook Station respectively.

C) Any emergency switching, isolating, tagging, locking out and grounding of any high voltage power apparatus at Lewis Research Center or Plum Brook Station due to unscheduled outages, accidents, emergency power restrictions, or other unforeseen emergency situations.

D) Routine and scheduled operation of research test facilities including, start, run and shutdown of high voltage electrical facilities under control of control room operators. However, a operating safety permit issued by the appropriate Lewis Safety Committee may be required for such operation.

5.0 Electrical Equipment Switching Orders

5.1 Scheduled Electrical Equipment Switching Orders

The general requirement for switching, isolating, tagging, locking out and grounding any part of a high voltage electrical power system is the preparation, verification, issuance, and execution of an Electrical Equipment Switching Order by the Electrical Power Dispatcher (EPD) at Lewis Research Center, or by the Responsible Engineer at Plum Brook Station.

The COTR or TR is responsible for preparing a written application for switching in the high voltage electric power system, a scope of work and implementation plan. The COTR or TR shall submit the application to the Electric Power Dispatch Office (EPDO) at Lewis Research Center or to the Responsible Engineer at Plum Brook Station a minimum of eight(8) work days in advance of the scheduled switching.

The EPDO or the Plum Brook Responsible Engineer shall determine if the scope of work or implementation plan requires a construction safety permit issued by the EASC. The standard for this determination shall be Section 4.0 above. If the EPDO or the Plum Brook Responsible Engineer determines that the switching requested is for work that would meet the standards of Section 4.0 and no construction safety permit has been issued for that work by the EASC, then no switching orders may be authorized.

Prior to executing any scheduled switching order, the EPD shall have a copy of any required construction safety permit issued by the EASC and shall log the permit number on the switching order. At Plum Brook Station the Responsible Engineer shall have a copy of any required permit issued by the EASC and shall log the number on the switching order.

5.2 Unscheduled Electrical Equipment Switching Orders

In responding to emergencies at Lewis Research Center, the EPD has the authority to order switching, isolating, tagging, locking out, and grounding of any high voltage and low voltage electrical power apparatus at Lewis Research Center to protect personnel, equipment, systems and facilities. At Plum Brook Station, this same authority is delegated to the Responsible Engineer.

Following completion of a scheduled Electrical Equipment Switching Order, a copy of the signed, completed switching order and all retired Electrical Operation Tags shall be returned to the EPDO at Lewis Research Center and to the Responsible Engineer at Plum Brook Station.

6.0 Disconnect Means

6.1 Each facility at Lewis Research Center or Plum Brook Station may be fed with one or more feeders, depending on load requirements. Each feeder shall meet all NEC requirements. Where a facility is fed by more than one feeder, a permanent plaque or directory shall be installed at each feeder equipment location denoting all other feeders on or in that facility and the area served by each.

6.2 Each Lewis Research Center and Plum Brook facility shall be provided with means for disconnecting all ungrounded supply conductors. The disconnecting means shall be installed either inside or outside of the facility at a readily accessible location nearest the point of entrance of the supply conductors. The intent of this requirement is to provide convenient means for isolating the facility from all sources of electrical energy. Particular attention shall be addressed to providing disconnecting means for tie circuits, for feeds from automatic transfer devices, for feeds from separately derived power sources, etc.

6.3 The disconnecting means provided under paragraph 6.2 shall meet all National Electrical Code requirements including those related to location, quantity, grouping, access, simultaneous opening of poles, etc.

6.4 Feeder disconnecting means shall be accessible as follows:

(a) Disconnects shall be readily accessible to qualified personnel. Where the disconnecting devices are locked, sealed or otherwise not readily accessible, branch circuit overcurrent devices shall be installed on the load side, shall be

mounted in a readily accessible location, and shall be of lower ampere rating then the feeder disconnect device.

(b) Where disconnecting means are remotely located from the facility, the Lewis Research Center Electric Power Dispatcher or the Plum Brook Management Office shall prepare and maintain switching plans required to electrically isolate each such facility. These isolation plans shall be communicated to all Lewis Research Center or Plum Brook emergency response and service organizations.

(c) All disconnecting means provided for transmission and distribution level voltages shall be accessible only to qualified personnel.

6.5 An enclosed disconnecting means provided under paragraph 6.2 shall be externally operable without exposing the operator to contact with energized parts, or may be a power operated switch or circuit breaker.

6.6 Typical acceptable arrangements of disconnecting means are shown in Exhibits OI-013-1 through OI-013-3.

7.0 References:

1. Configuration Control, LMI 8820.1.

Table 1. SUMMARY OF SAFETY, HEALTH AND CONSENSUS STANDARDS

All Lewis Research Center and Plum Brook Station employees and contractor personnel, in the performance of their assigned duties (engineering, design, construction, operation, maintenance, repair and inspection) in the high voltage electrical power systems shall comply with all applicable Federal, State, NASA and local safety and health rules, regulations and standards. In addition, all employees and contractor personnel shall perform all work in compliance with current editions of:

A) National Electrical Code, ANSI/NFPA 70.
B) National Electrical Safety Code, ANSI C2.
C) 29CFR1926 OSHA Safety and Health Regulations for Construction.
D) All American National Standards Institute (ANSI) Standards.
E) All Institute of Electrical and Electronic Engineers (IEEE) Standards.
F) OSHA PCB Rules and Regulations, 29CFR1910.1000.
G) OSHA Mercury Rules and Regulations, 29CFR1910.1000
H) OSHA Hazardous Materials Communication Standard, 29CFR1910.1200.
I) OSHA General Requirements, 29CFR1926.950 and 29CFR1910.301-399.
J) OSHA Hazardous Waste Requirements, 29CFR1910.120.
K) NASA Basic Safety Manual, NHB 1700.1.
L) NASA Safety and Health Handbook, NHB 2710/1.
M) Lewis Safety Manual.
N) High Voltage Electric Power System Operating Instructions (HVEPS-OI-xxx) issued by the Lewis Electrical Systems Manager.
O) Facility Operating Instructions issued by the Facility/System Manager.
P) Electrical Equipment Switching Orders.
Q) Operating and Construction Safety Permits issued by the Electrical Applications Safety Committee.

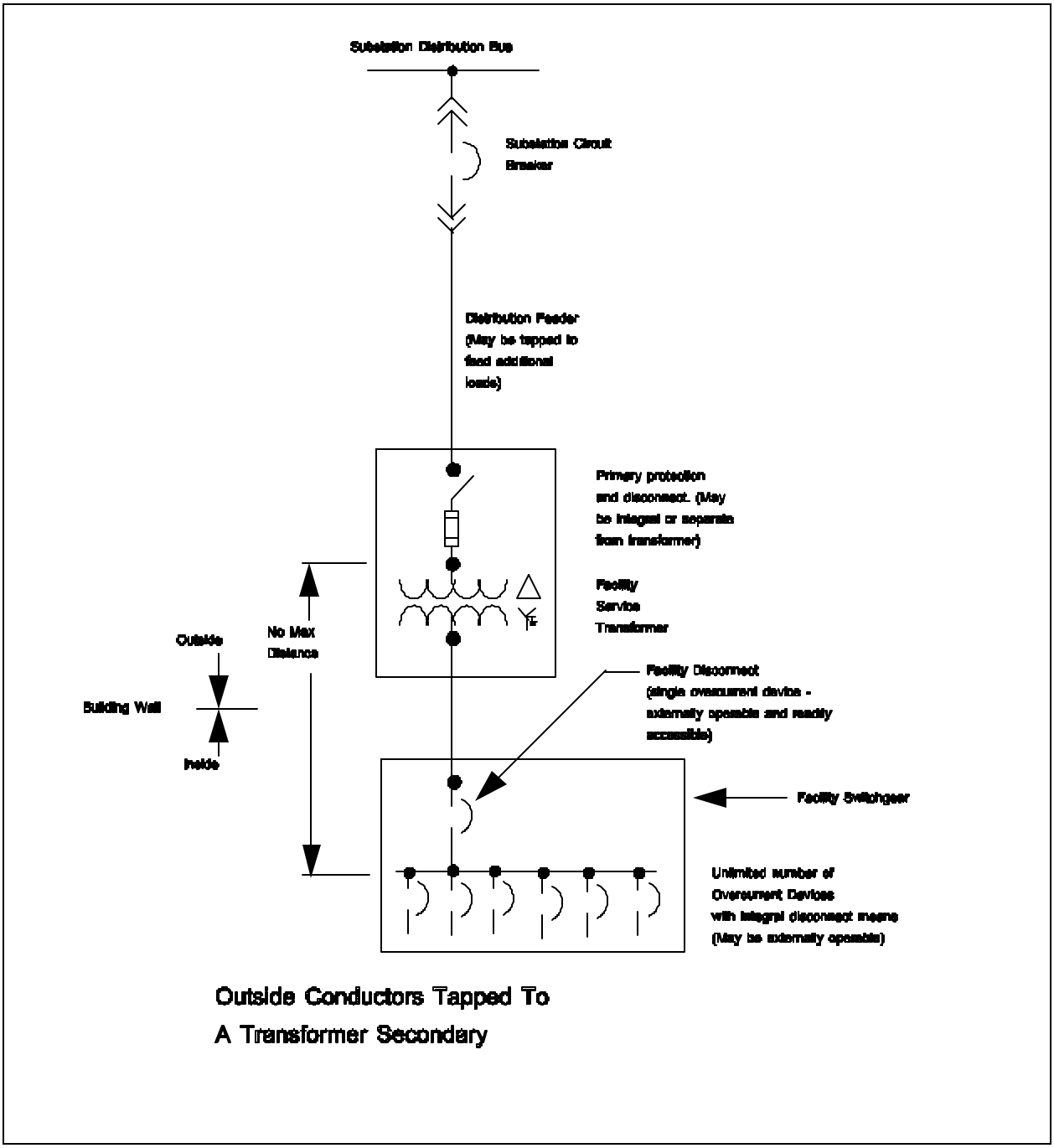

Exhibit OI-013-1

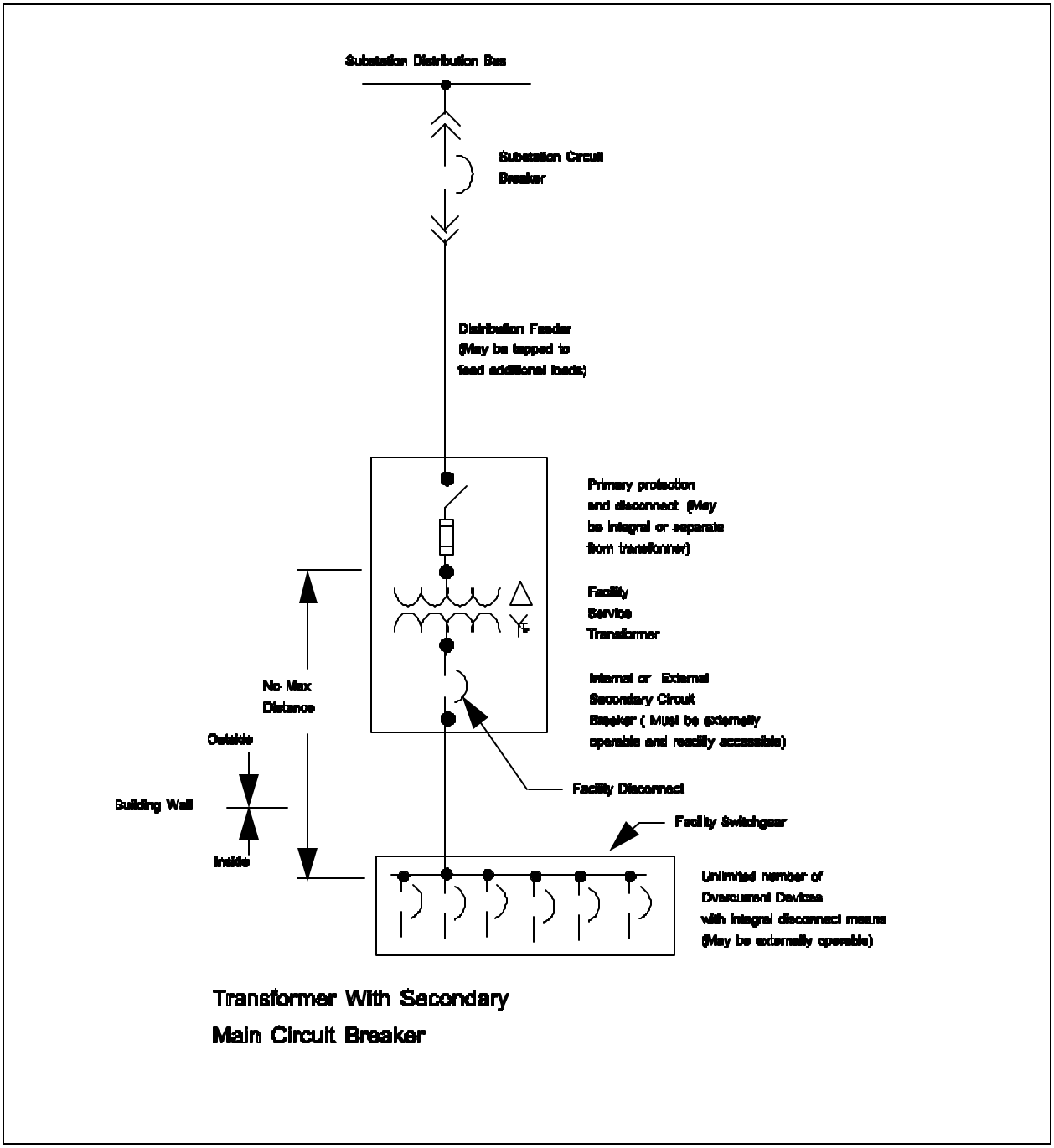

Exhibit OI-013-2

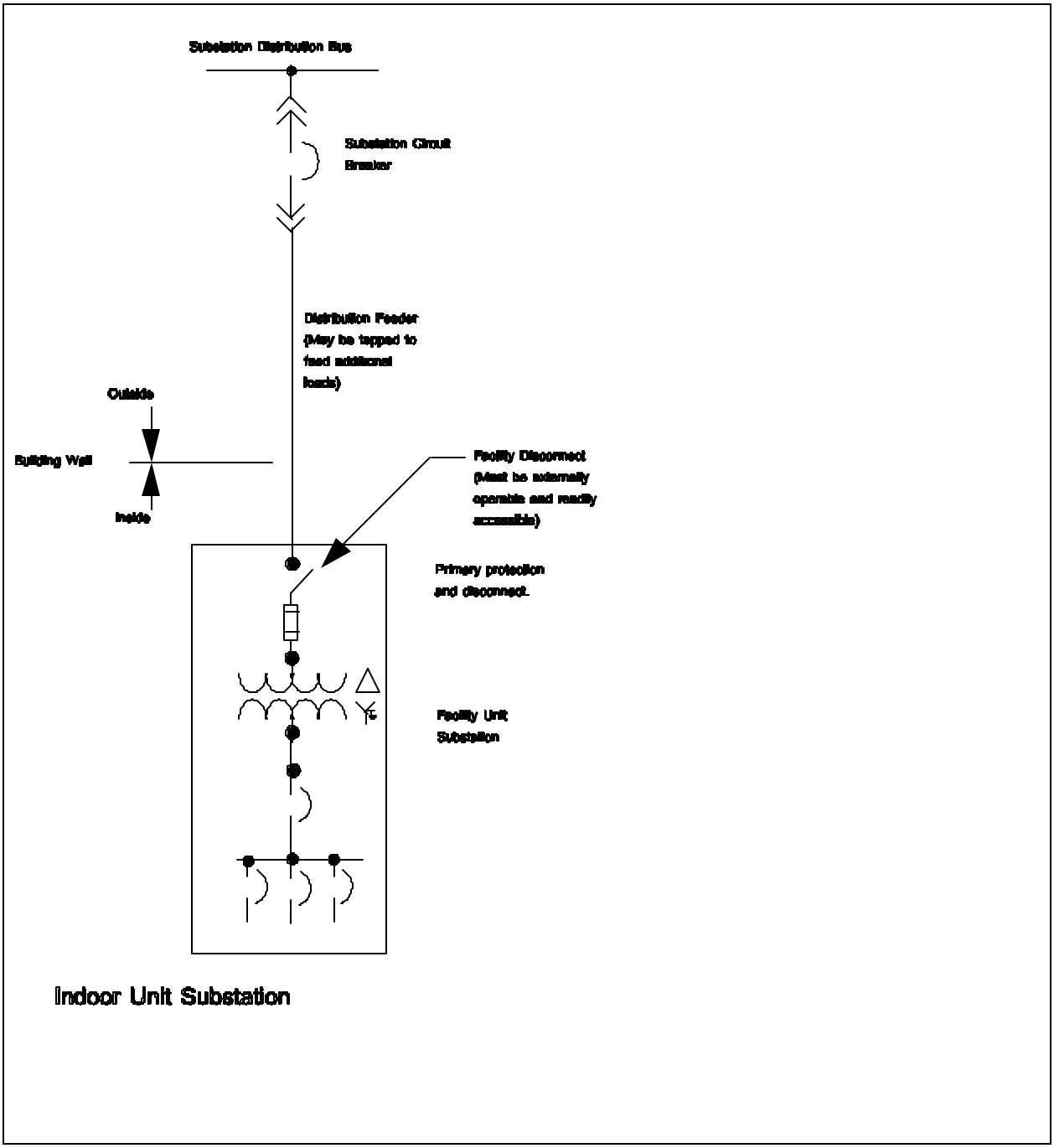

Exhibit OI-013-3

7340 February 14, 1992

TO: Distribution

FROM: 7340/Chief, Electrical Power Systems Branch

SUBJECT: High Voltage Electric Power System
Operating Instruction: HVEPS-OI-015
Protective and Auxiliary Relays in the HVEPS

This operating instruction is effective March 1, 1992 and describes requirements for protective and auxiliary relays in the high voltage electric power systems (HVEPS) at the Center. This operating instruction requires:

a) protective relays to be maintained and calibrated or reset at least triennially
b) auxiliary relays to be maintained at least every five years
c) a standardized label to be placed on protective and auxiliary relays
d) the use of one meter/relay seal or keyed lock on protective relays cases, and
e) the use of a Protective Relay Setting Form to effect a change in setting of any relay.

1.0 CALIBRATION AND MAINTENANCE

Each protective relay in the HVEPS at the Center shall be inspected, receive preventive maintenance, calibration, and, if necessary, corrective maintenance at least once every three years.

Each auxiliary relay in the HVEPS at the Center shall be inspected, receive preventive maintenance, and, if necessary, corrective maintenance at least once every five years.

2.0 STANDARD LABELS

Each protective relay shall have a standard label affixed to the front of the relay case or glass clearly indicating the date of maintenance, setting or recalibration. The adhesive-backed label shall be diamond in shape, printed in red on white and contain the following information:

a) PM
b) Date: ____

The standard label shall be affixed to the front of the relay by the contractor performing the

HVEPS-OI-105
February 14, 1992

preventive maintenance, setting or recalibration. This label shall not obscure the relay nameplate, setting(s) or target(s).

3.0 METER/RELAY SEAL or KEYS

At least one meter/relay seal shall be affixed to a post on the relay cover or the relay shall be key locked by the contractor performing the preventive maintenance, setting or recalibration to prevent unauthorized changes to relay settings.

4.0 PROTECTIVE RELAY SETTING FORM

The purpose of the relay setting form (attached) is to control the settings of the protective relays and to document the basis for the selected settings. Beginning March 1, 1992, proposed settings of new protective relays and proposed revisions of settings of existing protective relays shall be documented on a Protective Relay Setting Form. The form shall be reviewed and signed by the appropriate project electrical engineer (from FOD, FED or AFED) and sent to 7340/Power Systems Manager for approval.

Protective relays in the HVEPS may be reset in the field only upon receipt of an approved Protective Relay Setting Form. Upon completion of setting and calibrating the relays, the contractor shall sign and date the form. The 7360/Project Management Branch shall maintain the card file of relay settings. The original Protective Relay Setting Form shall then be submitted to the 7340/Electrical Power Systems Manager. The manager shall maintain a record file of the completed and signed forms.

_____
Joseph F. Torri P. E.

Concurrence:

_____
Richard A. Danks, P. E.
Chief, Facilities Operations Division

HVEPS-OI-105
February 14, 1992

Distribution:
0150/W. F. Ford
0153/F. J. Greco
2800/F. J. Kutina Jr.
2810/J. W. Schaefer
7000/D. J. Poferl
7300/R. A. Danks
7300/D. R. Canfield
7300/D. W. Newland
7302/H. D. Manthia
7310/J. A. Webb, Jr.
7311/H. J. Wroblewski
7320/J. M. Vega
7330/R. J. Horansky
7331/J. H. Norton
7360/H. C. Craddock
7360/D. L. Lehota
7370/R. P. Jones
7600/D. J. Keliher
7620/H. A. Schoeffler
7620/H. A. Schoeffler/EASC
7650/E. J. Boitel

LEWIS RESEARCH CENTER PROTECTIVE RELAY SETTING FORM **HVEPS-OI-015**	**RELAY LOCATION:**	**BUILDING:**	**PANEL:**		**PAGE #**

BREAKER	PHASE	CTR/PTR	MANUF	TYPE	SETTING	BASIS OF SETTING	NEW OR CHANGE

REMARKS:

INITIATED BY:	**REVIEWED BY:**	**APPROVED BY:**	**SET BY:**	**CARD FILE UPDATED BY:**
DATE:	**DATE:**	**DATE:**	**DATE:**	**DATE:**

FORM: HVEPS-OI-015 FEB 14, 1992

Instructions for Protective Relay Setting Form	
Relay Location:	Enter the name of the Building
Building	Enter Building Number or Substation Name where the relay is located
Panel	Enter Panel Number or designation where the relay is mounted
Page #	Enter a number beginning with 1
Breaker	Enter the name of the apparatus (circuit, breaker, transformer, bus, capacitor, etc.) associated with the relay
Phase	Enter the electrical phase such as "a" or "a, b, and c"
CTR/PTR	Enter the appropriate Current Transformer Ratio (i.e. 400-5) or Potential Transformer Ratio (i.e. 2400-120)
Manuf	Enter the name of the relay manufacturer, (i.e., GE, WECO, BAS-LER)
Type	Enter the type of relay (i.e. IAC or HDD)
Setting	Enter the new relay settings and the required calibration points
Basis of Setting	Enter the condition(s) establishing the relay setting
New or Change	If the setting is new, enter "NEW"; if the setting is a change, enter "CHANGE".
Remarks	User spaces
Initiated By	Name of the person requesting the change in relay settings
Reviewed By	Name of the engineer reviewing the relay settings
Approved By	Signed by 7340/Power Systems Manager, approving the settings and authorizing the new settings be made
Set By	Name of the technician who set the relays in the field
Card File Updated By	Name of the technician updating the relay card file in Building 66.

INSTR. HVEPS-OI-015 FEB 14, 1992

HVEPS-OI-018
May 1, 2004

TO: Distribution

FROM: 7320, Systems Management and Maintenance Branch, Glenn Research Center High Voltage Electrical Power System Manager

SUBJECT: High Voltage Electric Power System
Operating Instruction: HVEPS-OI-018
Operation and Maintenance Responsibilities for High Voltage Equipment

The following new High Voltage Electric Power System Operating Instruction, HVEPS-OI-018, Operation and Maintenance Responsibilities for High Voltage Equipment, goes into effect May 1, 2004.

Louis F. Bernhardt (original signed)

Glenn Research Center
High Voltage Electrical
Power System Manager

Concurrence:

(original signed)
_____
John Mihevic
Central Process Systems Control Systems Manager

(original signed)
_____
Robert M. Suhay
Chairman, Electrical Applications Safety Committee

(original signed)
_____
Manuel Dominguez
Chief, Glenn Safety Office

Operation and Maintenance Responsibilities for High Voltage Equipment

CONTENTS

1.0 Purpose ……...……..3

2.0 Determining Proper O&M Responsibility for High Voltage Equipment……...…3

3.0 Unique Cases ……...…..4

4.0 Determining Proper O&M Responsibility for Protective Relaying Associated With High Voltage Switchgear or High Voltage Equipment…….5

5.0 Determining Proper Responsibility for Switching……..7

HVEPS-OI-018

Operation and Maintenance Responsibilities for High Voltage Equipment

1.0 PURPOSE

The following policy will provide the necessary guidelines to clarify operation and maintenance (O&M) responsibilities for all high voltage equipment and will more specifically address organizational responsibilities for O&M of high voltage switchgear and its associated breakers.

The specific guidelines, as shown for switchgear, apply to all other high voltage equipment such as disconnect switches, potential transformers, current transformers, power transformers, capacitors, etc.

2.0 Determining Proper O&M Responsibility for High Voltage Equipment

The general guideline for determining responsibility for O&M of high voltage equipment is determined by the specific area it supports and whether that equipment's primary function is *distribution* or its primary function is *operational*. There are unique cases where this general rule does not apply and they will be addressed in paragraph 3.0. As used in this document, "distribution" is defined to be that which affects multiple loads and "operational" is defined to be that which affects a single load or specifically in the case of some breakers, functions as a start or run breaker to a motor.

Specifically addressing switchgear, the responsibility for O&M of a line-up of high voltage switchgear and/or the breakers within that switchgear is determined as follows:

> If the switchgear's (and/or breaker associated with that switchgear's) ***primary function is distribution*** it will be the responsibility of the Systems Management and Maintenance Branch's high voltage maintenance support service contractor (HVMC) to **locally** operate and maintain the switchgear and all of its distribution breakers. **Local** operation and maintenance of any operational breakers within the switchgear line-up will be the responsibility of the Central Process Systems Operation Branch's Support Service Contractor (CPSOC). **Remote** operation is done through the Power Dispatch Office (Central Process Systems Operation Branch).
>
> If the switchgear's (and/or breaker associated with that switchgear's) ***primary function is operational*** (i.e. start or run breakers to a load) and is associated with Central process systems (ie: Refrigeration system, CAEB, Variable Frequency System, Cooling towers, etc) it will be the responsibility of CPSOC to **locally** operate and maintain the switchgear

and all of its operational breakers. **Local** operation and maintenance of any distribution breakers within the switchgear line-up will be the responsibility of the HVMC. **Remote** operation is done through the Power Dispatch Office (Central Process Systems Operation Branch).

If the switchgear's (and/or breaker associated with that switchgear's) ***primary function is research***, it will be the responsibility of the particular research operations area (i.e.: such as IRT.)

Maintenance of switchgear at Plumbrook Station will be the responsibility of the Plumbrook Management Office's support service contractor.

In general the individual breaker operation and maintenance would stay with the contract that supports the breaker function.

> **NOTE:** The above responsibilities apply to general maintenance. If the Organization responsible for the Primary function of the switchgear were to schedule an overhaul of the switchgear then all breakers would receive the same upgrade/maintenance.

3.0 Unique Cases

Essentially, if a breaker serves as the main or secondary device on a high voltage distribution transformer or a tie between sources of distribution, it is a **distribution** breaker and if a breaker serves as a start or run breaker, it is considered **operational**.

There are exceptions such as:

(a) The capacitor breakers at the 10x10 don't energize a motor but they serve to support motor operation and should be considered **operational.** The capacitor bank maintenance however, due to its location in substation K, will remain the responsibility of the HVMC.

(b) Breakers that serve as both a main secondary and as a start or run breaker (i.e Y breakers at CAEB) should, because of their control circuits, be considered **operational**.

(c) The 34.5kV breakers RG2D, RG2E, and RG2F along with the G1, G2, and G3 transformers could be looked at as being operational as the breakers and transformers **are exclusively used** (as a start breaker would be used) to directly energize and operate the 8X6 SWT drive motors. Due to the voltage level and their location within Substation G, they will be treated as **distribution**.

(d) The 34.5 kV transformers B1 & B3 and their primary and secondary breakers; and breaker UB1A **are used exclusively** to feed the Icing

Research Tunnel drive and therefore could be considered operational. However due to their voltage level and location within Substation B they will be treated as **distribution**.

(e) The TF2A, TF2B, and TF2C breakers are distribution type breakers, however since they specifically feed loads which are only in service when the variable Frequency System is operational they are to be treated **as operational**.

(f) Where contactors are used in lieu of breakers for the control of high voltage loads (i.e. Bld 23 service air, Bld 9 chillers, etc.) the contractor responsible for the operation of the load will be responsible for the contactor and associated switchgear.

4.0 Determining Proper O&M Responsibility for Protective Relaying Associated With High Voltage Switchgear or High Voltage Equipment

The responsibility for the protective relaying associated with high voltage switchgear or high voltage equipment is with the support service contractor that has responsibility for the switchgear and its breakers and/or the high voltage equipment.

Even though the support service contractor that has responsibility for the switchgear and/or the high voltage equipment has responsibility for the protective relaying, it is the HVMC that has been tasked by the government to maintain the calibration of all the protective relays. In these cases the support service contractor's COTR must prepare work orders to obtain the HVMC's services.

The settings or changes to settings for all high voltage protective relays will be authorized only by the High Voltage Electrical Power Systems Manager.

> **Note**: It is the responsibility of the organization performing the O&M of the particular high voltage breaker to notify the COTR of the HVMC if additional new protective relays are added to the system, so that this information can be added to the GRC MP2 database.

The two High Voltage Operating Instructions which address protective relaying used on the High Voltage System are OI's HVEPS-OI-005 and HVEPS-OI-015.

HVEPS-OI-005 addresses a control and protection relay test program which is to be performed on all new protective relaying to be used on the high voltage system. This program is to demonstrate proper operation of control and protective relay circuits prior to placing any **new or revised**, controls and protective relaying in service. HVEPS-OI-005 requires the test program or plan be sent to the High Voltage Electrical Power Systems Manager (HVEPSM) or his designated

representative. The actual test program is created and executed by other than the HVEPSM or his designated representative. Typically it has been the responsibility of the Electrical Project Engineer assigned to the task/project with the aid of contractor support.

HVEPS-OI-015 addresses the maintenance and calibration of protective relaying used on the high voltage system. Each protective relay on the Center is to receive preventative maintenance, calibration, and if necessary corrective maintenance at least once every three years. Auxiliary protective relays are to be tested or checked every 5 years. **Any changes to settings for these protective relays must be formally submitted** (using the standard protective relay setting form) **and approved by the GRC HVEPSM prior to the actual setting or change to settings that are made in the field, regardless of who actually is to enter the settings.**

The following are clarifications on protective relaying responsibilities:

1. The **HVMC** provides for the setting, calibration, and maintenance of all high voltage system protective relaying. Any new protective relaying added to the high voltage system must be identified and submitted for addition to the HVMC's list of equipment. This is done by notifying the COTR of the HVMC at the time of installation of the new protective relaying.

2. The protective relaying specialist, approved by the HVEPSM, will assist the HVMC with protective relaying associated with all non-CPSOC maintained equipment and has prime responsibility for preparation (per HVEPS-OI-15) of protective relay setting sheets associated with the protective relaying for the non-CPSOC maintained equipment. These sheets are to be turned over to the HVEPSM for approval. (Note: Often for new installations protective relay settings are provided as part of the final design)

3. The protective relaying specialist, approved by the Central Process Controls System Manager, will assist the HVMC with protective relaying associated with equipment maintained by the CPSOC and has prime responsibility for preparation (per HVEPS-OI-15) of protective relay setting sheets associated with the protective relaying for the CPSOC maintained equipment. These sheets are to be turned over to the HVEPSM for approval.

4. Funding for the provision of spares or for repair/replacement tasks will come from the GRC organization responsible for operation/maintenance of the High Voltage equipment.

5. With concurrence of the Central Process Controls Systems Manager, it is agreed that:

a. All protective relay settings on the High Voltage System (600V and above) are controlled by the HVEPSM. Any change to these settings must be approved by the HVEPSM. In addition, any setting change made to protective relays on breakers/systems maintained by the CPSOC, i.e; motor start/run breakers, will also be done with approval of the Central Process Controls Systems Manager.

b. The routine setting, maintenance, troubleshooting, replacement from spares and calibration of protective relaying is the responsibility of the HVMC. Funding for these tasks come from the Functional Budget for the HVMC. If a spare is not available, it is the responsibility of the HVMC to install the relay after it is obtained from outside funding.

c. The repair and replacement of protective relays is the responsibility of the HVMC. These tasks will be done with work orders. Funding for these tasks come from outside funding of the organization maintaining the equipment. When a protective relay is repaired or replaced the HVMC shall, if possible, replace a protective device with an "in kind" identical protective relay. Specifically, if a protective relay on breakers/systems maintained by the CPSOC is used which is not identical, the High Voltage Systems Manager and the Central Process Controls Systems Manager shall be contacted for approval, as this is a systems configuration change. "Non-identical" replacement protective relays for equipment maintained by the HVMC need approval only by the High Voltage Systems Manager.

d. Only the HVMC shall respond to trouble calls and perform work associated with the trouble calls on existing protective relays. The CPSOC shall report any protective relay problems on the breakers they maintain to the HVMC for correction. Simultaneous notification shall also be given to the responsible engineers or, if not available, to the appropriate Systems Manager.

e. Spare protective devices will be under the control of the HVMC in order to minimize any interruption in operations. Funding for spares will come from the GRC organization maintaining the equipment. Spare relays provided for breakers/systems maintained by the CPSOC will be tagged for use for that system only. In an emergency situation, approval for use of a spare relay, in a system other than it was purchased for, must be approved by the respective System manager or organization responsible for the activity of the CPSOC.

5.0 Determining Proper Responsibility for Switching

In general, switching is to be accomplished by the qualified personnel (as identified in the operating safety permit) of the support service contractor responsible for the breaker being operated.

SPECIAL CASE (Not Applicable to GRC's Outdoor Main Substations A, B, C, D, E, F, G, H, J, K, M, or N):
However, if on off hours during an unplanned outage or emergency situation if remote operation of a breaker was not available to the dispatch office and local operation was required, any GRC "qualified" switch person could provide the needed operation. If further involvement is required (due to breaker failure or malfunction) then the responsible contractor shall be notified and that contractor shall respond accordingly.