GLENN RESEARCH CENTER, OCCUPATIONAL HEALTH PROGRAMS MANUAL

TABLE OF CONTENT

NOTE: The revisions to these Chapters will be maintained and approved by the Safety and Health Division (SHeD). The published dates and the expiration dates are listed in the columns next to each chapter. If you are referencing paper copies, please verify that it is the most current version before use. Users of this manual should be cognizant of other documents such as the Environmental Programs Manual and Safety Manual.

Chapter	Title	Published Date	Expiration Date
Chapter 1	Occupational Health Programs	5/2012	5/2014
Chapter 2	Asbestos	5/2012	5/2014
Chapter 3	Hearing Conservation Program	5/2012	5/2014
Chapter 4	Respiratory Protection Program	5/2012	5/2014
Chapter 5	Lead	5/2012	5/2014
Chapter 6	Elemental Mercury	5/2012	5/2014
Chapter 7	Local Exhaust Ventilation	4/2012	4/2014
Chapter 8	Radiation Protection for Radioactive Materials	12/2011	12/2013
Chapter 9	Radiation Protection for Radiation-Generating Equipment	1/2012	1/2014
Chapter 10	Non-Ionizing Radiation	3/2012	3/2014
Chapter 11	Bloodborne Pathogens	5/2012	5/2014
Chapter 12	Indoor Environmental Quality	4/2012	4/2014
Chapter 13	Laser Safety Program	3/2012	3/2014
Chapter 14	Acquisition of Hazardous Chemicals and Materials	8/2012	8/2014
Chapter 15	Ergonomics	6/2012	6/2014
Chapter 16	Food Sanitation Program	6/2012	6/2014
Chapter 17	Federal Workers Compensation Program	2/2012	2/2014
Chapter 18	Automated External Defibrillators (AED) Program	8/2012	8/2014
Chapter 19	Synthetic Inorganic Fiber Program	5/2012	5/2014
Chapter 20	Hazard Communication Policy	5/2012	5/2014
	HAZCOM Program	11/2012	11/2014
Chapter 21	Hazard Assessment/Exposure Assessment Program	4/2012	4/2014
Chapter 22	Reproductive Hazards	4/2012	4/2014
Chapter 23	Nanomaterial Health and Safety	2/2012	2/2014
Chapter 24	OSHA Regulated Materials	4/2012	4/2014
Chapter 25	Chemical Hygiene Policy	5/2012	5/2014
	Chemical Hygiene Plan	11/2012	11/2014

Safety and Health Division (SHeD)
Revision Date: November 2012

Contents

1.0 PURPOSE....2
2.0 APPLICABILITY....2
3.0 BACKGROUND....2
3.1 Industrial Hygiene....2
3.2 Industrial Hygiene Support Areas....3
3.3 Health Physics Programs....3
3.4 Occupational Health Programs....3
3.5 Worker Compensation Program see OHPM manual....3
4.0 POLICY....3
5.0 RESPONSIBILITIES....3
5.1 SHeD Industrial Hygienist....3
5.2 CoTR for Occupational Health functions....4
5.3 Supervisors....4
5.4 Employees....4
6.0 REQUIREMENTS....4
6.1 OHP Implementation (NPR 1800.1, 8715.1)....4
6.2 Supervisor Role (NPR1800.1)....4
6.3 OHP Goals and Needs (NPR 1800.1)....4
6.4 Self Assessments and Waivers (NPR 1800.1)....4
6.5 Medgate GX Use (NPR 1800.1)....4
6.6 Update OHP Manual Chapters (GLWI-QS-1410.1)....4
7.0 RECORDS....4
8.0 REFERENCES....5
APPENDIX A .—DEFINITIONS AND ACRONYMS....6
APPENDIX B .—SERVICES PROVIDED BY Occupational Medicine Health Programs....7

NOTE: *The current version of this chapter is maintained and approved by the Safety and Health Division (SHeD). The last revision date of this chapter was May 2012. The current version is located on the Glenn Research Center intranet at http://smad-ext.grc.nasa.gov/shed/pub/ohpm/ohpm-manual.pdf. Approved by Chief of Safety and Health Division.*

1.0 PURPOSE

This chapter describes the NASA Glenn Occupational Health Program (OHP), which includes the disciplines of ergonomics, industrial hygiene, health physics, occupational medicine, nutrition, food sanitation, fitness, employee assistance and counseling, and worker compensation. The OHP enables its customers and partner organizations to achieve mission success by providing professional health services and programs that promote worker safety and health.

2.0 APPLICABILITY

The program provides support to all Center staff and assistance to resident contractor staff.

3.0 BACKGROUND

Improving worker safety and health is achieved by the implementation of programs that anticipate, recognize, evaluate, and control hazards in the workplace that may adversely affect employee well-being. Further, the medical and wellness programs foster employee health through medical screening, Occupational Safety & Health Administration (OSHA)-required medical surveillance, employee assistance programs, and employee fitness. The worker compensation program administers compensation to those who may experience work-related injury or occupational disease. The OHP supports the needs of GRC community, including the programs and projects. The OHP is fully integrated within the Safety and Health Division (SHeD) as support is provided to the safety and environmental program areas. The specific requirements for SHeD sponsored programs are defined in the SHeD program manuals: Occupational Health Program (OHPM), and the Glenn Safety Manual (GSM). Occupational Health responsibilities and requirements may also be found in the GRC Emergency Preparedness Plan and the Environmental Program Manual.

Listed below are specific areas covered by OHP:

3.1 Industrial Hygiene

- Acquisition of hazardous materials review and management
- Asbestos, lead, mercury
- Biological safety
- Bloodborne pathogens
- Chemical hygiene
- Hazard assessment/exposure assessment
- Hazard communication
- Health and safety equipment management
- Hearing conservation
- Indoor air quality
- Local exhaust ventilation
- Nanomaterial health and safety
- OSHA-regulated materials
- Reproductive hazards
- Respiratory protection

- Synthetic fibers
- Ventilation

3.2 Industrial Hygiene Support Areas

- Alarms
- Building inspections
- Confined space
- Construction safety
- Emergency response
- Hot work
- Incident Reporting Information System (IRIS)
- Job hazards analysis
- Mishap program
- Pandemic preparedness
- Personal protective equipment
- Safety permits
- Summer Student Safety

3.3 Health Physics Programs

- Radiation Protection for Radioactive Materials
- Radiation Protection for Radiation Generating Equipment
- Non-ionizing radiation safety
- Laser safety

3.4 Occupational Health Programs

- Automated External Defibrillator (AED)
- Ergonomics
- Employee Assistance (description of services provided in Appendix **B**)
- Fitness Center (description of services provided in Appendix **B**)
- Food Sanitation
- Occupational Medical Services (description of services provided in Appendix **B**)

3.5 Worker Compensation Program see OHPM manual

4.0 POLICY

See Glenn Policy Directive GLPD 1800.2.

5.0 RESPONSIBILITIES

5.1 SHeD Industrial Hygienist

The lead industrial hygienist shall be responsible for chapter update regarding overview of OH programs.

5.2 CoTR for Occupational Health functions

The CoTR for Occupational Health Program functions shall conform to the requirements set forth in NPR 1800.1.

5.3 Supervisors

All supervisors shall implement requirements as specified in specific OH programs.

5.4 Employees

All employees shall comply with OH program requirements as identified in specific programs.

6.0 REQUIREMENTS

6.1, 6.2, 6.3, 6.4, 6.6 Verification: Self assessments and HQ sponsored audits, SAARIS

6.1 OHP Implementation (NPR 1800.1, 8715.1)

The OHP shall be implemented according to the directives of the NASA OHP and Safety procedures and all applicable legal and regulatory requirements as defined in the SHeD Manuals. The NASA NPRs are mandatory.

6.2 Supervisor Role (NPR1800.1)

OHP-specific requirements shall be implemented by supervisors where these requirements apply to their employees.

6.3 OHP Goals and Needs (NPR 1800.1)

The OHP health staff shall evaluate program needs and establish goals. Agency personnel will assist the Center in meeting its goals by conducting audits and/or reviews and by evaluating processes and procedures that will establish an effective program. Employee participation and program feedback are encouraged and welcomed.

6.4 Self Assessments and Waivers (NPR 1800.1)

OHP program leads shall complete required self assessment reviews in accordance with NASA NPR 1800.1. Further, non-compliance findings identified during the self review process shall be reported via the Safety Audits, Assessments, and Reviews Information System (SAARIS) or locally required corrective action systems-as required.

Where an alternate or supplementary procedure is required that differs from accepted regulations, policies, or standards, the OHP staff shall submit a waiver to the responsible NASA Headquarters reviewer for coordination and approval.

6.5 Medgate GX Use (NPR 1800.1)

6.5 Verification Review of database

OHP program leads shall provide required inputs into electronic health record (EHRS) and environmental health record keeping systems known as Medgate GX.

6.6 Update OHP Manual Chapters (GLWI-QS-1410.1)

6.6 Verification SHeD Manuals Metrics Reviews

OHP leads shall update manual chapters in accordance with the GLWI-QS-1410.1 Manual revision procedure per schedule requirements or as significant changes in regulatory or NASA requirements arise.OHP leads shall ensure that records specified in the manual chapters are recorded on the C-278 form. (GLPR 1440.1B)

7.0 RECORDS

OHP records requirements are defined in the individual programs and are at a minimum maintained in accordance with the GRC recordkeeping regulations and specified on the C-278. Further, any program records that meet the requirements of the OSHA Access to Employee Exposure and Medical Records shall be preserved and maintained for at least the duration of employment plus thirty (30) years.

Medgate GX

8.0 REFERENCES

Document number	Document name
GLPD 1800.2	Glenn Policy Directives: Glenn Research Center Occupational Health Program
29 CFR 1910	Occupational Safety & Health Administration: Occupational Safety and Health Standards
29 CFR 1926	Occupational Safety & Health Administration: Safety and Health Regulations for Construction
29 CFR 1960	Occupational Safety & Health Administration: Basic Program Elements for Federal Employee Occupational Safety and Health Programs and Related Matters
29 CFR 1910.1020	Occupational Safety & Health Administration: Access to Employee Exposure and Medical Records
NPR 1800.1	NASA Procedural Requirement: NASA Occupational Health Program Procedures
NPR 8715.1	NASA Occupational Safety and Health Programs
GLPR 1440.1B	Records Management
GLWI-QS-1410.1	Glenn Work Instruction SHeD Manual Revision

APPENDIX A.—DEFINITIONS AND ACRONYMS

Automated External Defibrillator (AED).—A device used to assist in the attempt to save the life of someone in sudden cardiac arrest.

Code of Federal Regulations (CFR)

Contract Officer Technical Representative (CoTR)

Glenn Policy Directive GLPD

Glenn Research Center (GRC)

Incident Reporting Information System (IRIS)

NASA Procedural Requirement (NPR)

Occupational Medical Services (OMS)

Occupational Safety & Health Administration (OSHA)

Occupational Health Program (OHP)

Safety and Health Division (SHeD)

APPENDIX B.—SERVICES PROVIDED BY OCCUPATIONAL MEDICINE HEALTH PROGRAMS

Employee Assistance Program (EAP)

- The Employee Assistance Program promotes and maintains the mental fitness of the NASA workforce, employing a licensed mental health practitioner who counsels and communicates with employees to assist them with issues that may impact their performance and/or productivity at work. The EAP practitioner provides outreach and awareness presentations, leads support groups, and conducts employee orientations and supervisor training.
- Additionally, in anticipation of critical incidents, including man-made and natural disasters, EAP provides and maintains a preparedness program. The EAP practitioner works in coordination with Security, Human Capital, and other offices, and participates and assists with activities and events related to threats (either perceived or actual) against any members of the NASA workforce.
- EAP encompass comprehensive wellness services, including phone consultation for employees and supervisors, eldercare, childcare, nutrition and fitness coaching, and financial and legal assistance. The EAP program is available 24/7 for crisis intervention.

Occupational Medical Services (OMS)

- OMS takes a preventive approach to health risks and empowers GRC civil servants to manage their own health by providing accessible and user-friendly services through employee health programs at the worksite.
- Programs for civil servants include but are not limited to annual physical exams, medical surveillance, nutrition counseling, and episodic care.
- OMS also provides limited services to GRC contractors through their companies, such as surveillance and certification exams. Urgent and/or emergent medical care is provided to all individuals: civil servants, contractors, students, and visitors.

Fitness Center

- GRC maintains an onsite Fitness Center, based on the Office of Personnel Management's (OPM's) authority, incorporating industry standards provided by the American College of Sports Medicine (ACSM).
- The Fitness Center staff are credentialed, CPR/BSL and BBP certified and trained. The onsite Fitness Center provides shower facilities and lockers rooms; an exercise room for stretching and classes; a designated walking/jogging trail, indoor exercise equipment of commercial quality and many wellness activities.

Nutrition

- A registered dietitian is available for nutrition counseling at the NASA Glenn Research Center, Medical Services. A registered dietitian (RD) is a professionally trained authority in the role that food and nutrition plays in health Individual Counseling available for civil servants and contractors on a variety of health situations such as high cholesterol, diabetes, hypertension, obesity, digestive problems, poor nutrition habits and prenatal nutrition

Contents

1.0 PURPOSE 3
2.0 APPLICABILITY 3
3.0 BACKGROUND 3
4.0 POLICY 3
5.0 RESPONSIBILITIES 4
5.1 SHeD 4
5.2 Supervisors 5
5.3 Employees 5
5.4 Motor Pool Supervision 5
5.5 Facilities Division 5
5.6 Contracting Officer's Technical Representative 5
5.7 Researchers 6
5.8 Medical Director, Occupational Medicine Services 6
5.9 Human Capital Development Division Chief 6
5.10 Energy and Environmental Management Office (FE) 6
6.0 REQUIREMENTS 6
6.1 Hazard Assessment 6
6.2 Exposure Assessment 6
6.2.1 Exposure Limits 7
6.2.2 Air Sampling 7
6.3 Safe Work Practices 7
6.4 Engineering Controls 7
6.5 Personal Protective Equipment 7
6.6 Training (*29 CFR 1926.1101*) 7
6.7 Medical Surveillance (*29 CFR 1910; NASA NPR 1800.1*) 8
6.8 Disposal 8
6.9 Recordkeeping (*29 CFR 1910.20*) 8
7.0 RECORDS 8
8.0 REFERENCES 9
APPENDIX A .—DEFINITIONS AND ACRONYMS 10
APPENDIX B .—ASBESTOS ABATEMENT AND MAINTENANCE PROGRAMS 13
B.1 Introduction 13
B.2 OSHA Asbestos Work Classifications for Abatement and Maintenance Activities 13
B.3 Inventory of Asbestos-Containing Building Materials 13
B.4 Handling of Asbestos-Containing Materials 13
B.5 Responsibilities of the NASA Responsible Person 13
B.6 Responsibility of Others 14
B.7 Notification 16
B.8 Additional Information 16
B.9 References 16
APPENDIX C .—ASBESTOS HOUSEKEEPING PROGRAM 17
C.1 Introduction 17
C.2 Inventory of Asbestos-Containing Building Materials 17
C.3 Reporting and Management of Asbestos Spills 17
C.4 Asbestos Spill Cleanup and Disposal 17
C.5 Housekeeping in Areas with Asbestos-Containing Spills 18
C.6 Notification 18
C.7 Additional Information 18
APPENDIX D .—ASBESTOS BRAKE AND CLUTCH REPAIR PROGRAMS 19
D.1 Introduction 19
D.2 Policy 19
D.3 Inventory of Asbestos-Containing Automotive Maintenance and Repair Materials 19
D.4 Control Methods for Brake and Clutch Activities 19

D.5 Training 20
D.6 Additional Information 20
APPENDIX E .—ASBESTOS RECORDS PROGRAM 21
E.1 Introduction 21
E.2 Inventory of Asbestos-Containing Building Materials 21
E.3 Bulk Sampling Requirements 21
E.4 Approval of Asbestos Sampling Plan 21
E.5 Coordination of Abatement Results....21

Chapter 2—Asbestos

***NOTE**: The current version of this chapter is maintained and approved by the Safety and Health Division (SHeD). The last revision date of this chapter was May 2012. The current version is located on the Glenn Research Center intranet at http://smad-ext.grc.nasa.gov/shed/pub/ohpm/ohpm-manual.pdf. Approved by Chief of Safety and Health Division.*

1.0 PURPOSE

This chapter establishes minimum requirements for the handling, maintenance, use, removal, and disposal of all friable and non-friable asbestos-containing materials (ACMs), ACM debris, and presumed asbestos-containing materials (PACMs) at the NASA Glenn Research Center (GRC) at Lewis Field and Plum Brook Station (PBS).

2.0 APPLICABILITY

This chapter is applicable to all GRC personnel at Lewis Field and PBS, including, but not limited to, civil servants, contractor personnel (construction contract personnel must comply with the contents of this program; however, the contractor is responsible for implementation details such as air monitoring and personal protective equipment (PPE)), tenants, and students.

3.0 BACKGROUND

Asbestos is a generic term applied to a number of naturally occurring fibrous mineral silicates that, when crushed or processed, break down into smaller fibers that readily become airborne. The most common types of asbestos are chrysotile, amosite, and crocidolite.

Asbestos may be found in valve-stem packing, gaskets, boiler insulation, pipe lagging, brake linings, shielding materials, insulating boards, roofing products, and protective clothing. In the building industry it is used in the manufacture of asbestos cement products, heat insulating and fireproofing materials, patching and taping compounds, roofing products, floor tiles, and ceiling panels and tiles.

Asbestos is not believed to pose a health hazard unless it gets into the air and is inhaled or swallowed. Breathing asbestos fibers increases the risks of developing lung cancer (especially in active smokers), mesothelioma (a cancer of the lung lining), and asbestosis (chronic lung disease). Gastrointestinal cancers have been reported more frequently in asbestos workers, but a direct relationship between ingestion of asbestos and the development of these cancers has not been established.

Asbestos-related activities are strictly regulated. Worker protection is regulated by the Occupational Safety and Health Administration (OSHA) in 29 Code of Federal Regulations (CFR) 1910.1001, Occupational Safety and Health Standards, Asbestos, and in 29 CFR 1926.1101, Safety and Health Regulations for Construction, Asbestos. These standards include requirements for regulated areas, employee exposure monitoring, PPE (including full body coveralls and respirators), work practices and engineering controls, competent persons, employee training, hygiene facilities, housekeeping, and medical monitoring.

Asbestos in the ambient air is covered by 40 CFR 61.140 to 61.157, the U.S. Environmental Protection Agency's (EPA's) National Emission Standard for Asbestos, and is enforced by the U.S. EPA Northwest District in Bowling Green and the Cleveland Division of Air Pollution Control.

4.0 POLICY

It is GRC's policy to comply with all applicable regulations regarding asbestos management and to prevent illness to employees and damage to the environment from the use, removal, and disposal of asbestos.

GRC's policy with regard to asbestos is to

- Restrict contact with ACM to only those staff members who have been properly trained and properly licensed
- Provide sufficient training and communications so that this policy is effectively implemented
- Ensure that contact with ACM, whether in restricted or non-restricted areas, is conducted in accordance with GRC specifications and OSHA requirements for such work

- Ensure that any job that may involve disturbing ACM is coordinated with the Safety and Health Division (SHeD).
- Prohibit the new use of ACM except in applications where there is no suitable non-asbestos material
- Ensure that existing ACMs are maintained in good condition (isolated from routine contact by the establishment of regulated areas) or are abated
- Ensure that the personnel engaged in asbestos activities are properly trained, equipped, medically monitored, and are not continuously exposed to asbestos fibers in excess of 1/10 of the OSHA personal exposure limits, (0.01 fibers per cubic centimeter (f/cm^3) of air), without PPE
- Ensure that the levels of asbestos do not exceed 0.01 f/cm^3 outside of regulated areas

GRC has four categories of asbestos activities, each requiring special procedures:

1. Asbestos Abatement and Maintenance Programs (Appendix B)
2. Asbestos Housekeeping Program (Appendix C)
3. Asbestos Brake and Clutch Repair Programs (Appendix D)
4. Asbestos Records Program (Appendix E)

5.0 RESPONSIBILITIES

It is the responsibility of all civil servants, tenants, and support service contractors to ensure that ACM is removed or handled only by properly trained and licensed personnel. A list of specific responsibilities follows:

5.1 SHeD

SHeD is responsible for

- Providing guidance on the requirements of Federal, State, and local environmental regulations
- Managing the Asbestos Program and worker exposure issues
- Ensuring, through program design and implementation, that the health of non-asbestos workers and the environment are protected from ACMs at GRC
- Collecting bulk asbestos samples, where appropriate, to determine the presence or absence of asbestos
- Maintaining the facility asbestos survey system (FASS) database and files for Lewis Field and PBS
- Tracking ongoing asbestos abatement activities, overseeing compliance with regulatory requirements, and updating the asbestos survey database
- Maintaining air monitoring and air sampling exposure data
- Providing guidance on regulatory occupational health requirements
- Auditing contracting officer's technical representative (COTR) and contractor performance in asbestos abatement projects
- Reviewing control measures in operations involving ACM
- Providing sampling and analysis support to identify ACMs
- Calibrating air-monitoring equipment
- Obtaining and managing Center-wide blanket notifications

- Reviewing and approving purchase requests of ACMs in cases where no suitable substitute can be found

5.2 Supervisors

Supervisors are responsible for

- Ensuring that COTRs, and others in their organization with responsibility for projects involving asbestos abatement activities, are accountable for compliance with this policy via performance appraisals and/or other means
- Notifying SHeD about operations involving ACM
- Ensuring that employees working with ACM receive the training specified for the engineering, work practice controls, and PPE specified for their operations

5.3 Employees

Employees are responsible for properly using engineering and work practice controls and PPE specified for their operations and for attending required training.

5.4 Motor Pool Supervision

Motor pool supervision (when applicable) is responsible for monitoring brake and clutch maintenance and repair activities, as specified in Appendix B, and ordering automotive parts on an as-needed basis from vendors, specifying they that they are to be asbestos free.

5.5 Facilities Division

Project managers, facility management engineers, and facility operations personnel are responsible for ensuring that

- ACM that may be disturbed in any renovation and maintenance activities is identified in the scope of work and removed only by qualified asbestos abatement or maintenance workers
- Survey protocols are conducted in accordance with all requirements

5.6 Contracting Officer's Technical Representative

The COTR is responsible for

- Notifying SHeD, in advance, of the date of each step in an asbestos abatement project
- Identifying suspect ACMs that were not identified in the scope of work during renovation and construction activities, arranging testing of suspect ACM for asbestos content, and if ACM, ensure its removal by a qualified asbestos abatement contractor if it will be disturbed during the project
- Ensuring that asbestos-related work is performed in accordance with all applicable appendixes and regulations
- Providing a copy of survey results to SHeD.
- Providing a final report to SHeD, as appropriate, detailing all ACM removed during abatement and/or repair activities
- Ensuring that building occupants and employers are properly notified in advance of, during, and following the completion of asbestos work
- Providing the results of air samples taken during Class I, II, and III work to employers of employees in contiguous areas and to SHeD within 10 days
- Posting results of air samples taken during Class I, II, and III work at the entrance to the abatement worksite

5.7 Researchers

Researchers are responsible for identifying uses or the presence of ACM on safety permit applications and contacting SHeD as appropriate, for operations involving ACM not subject to a safety permit.

5.8 Medical Director, Occupational Medicine Services

The Director of Occupational Medicine Services is responsible for

- Maintaining medical surveillance programs for civil servant and contractor employees exposed to hazardous chemicals that require medical monitoring
- Preserving and maintaining the medical records for each employee for at least the duration of employment plus 30 years and discussing results of examinations with employees as needed
- Notifying employees of medical surveillance results
- Notifying SHED about employees who may require an exposure evaluation based on clinical findings

5.9 Human Capital Development Division Chief

The Human Capital Development Division Chief is responsible for scheduling employee training and maintaining records of employees who completed training and any associated examinations.

5.10 Energy and Environmental Management Office (FE)

- Providing guidance and oversight on the disposal of ACM and on any air, water, or soil pollution issues.
- Upon request, arranging for the temporary storage and proper disposal of ACM wastes.

FE will maintain original copies of the annual Asbestos Blanket Permit for the center. SHED will maintain copies of said form and all associated support documentation.

6.0 REQUIREMENTS

SHeD must be kept apprised of all asbestos activities throughout the Center and must be notified when activities are conducted that could disturb ACMs. This section includes procedures for assessing and evaluating potential hazards; methods to reduce and control exposure to asbestos through the use of safe work practices, engineering controls, and PPE; training and medical surveillance requirements; and disposal and recordkeeping requirements.

6.0 - SHeD shall verify requirements for this section to ensure compliance with the Chapter. SHeD verification shall be accomplished through a combination of review processes (HASP's, Safety Permits, design reviews, etc.) and/or worksite/building inspections.

6.1 Hazard Assessment

All tasks where asbestos may be disturbed at GRC must have a hazard assessment performed by SHeD, as appropriate, unless performed by individuals trained and licensed in the State of Ohio to conduct such activities and overseen by a competent person.

6.1 - SHeD shall verify requirements for this section to ensure compliance with the Chapter. SHeD verification shall be accomplished through a combination of review processes (HASP's Safety Permits, design reviews, etc.) and/or worksite/building inspections.

6.2 Exposure Assessment

The hazard assessment information is used to identify exposure-monitoring needs according to the activity performed and the potential for exposure. Air sampling shall be conducted by an industrial hygienist or other qualified individual, a contractors' qualified representative, or a qualified third party. Air sampling may be conducted at the employer's or employee's request as a result of a safety permit review, hazard analysis, facility renovation, maintenance activity, or emergency response, such as an uncontrolled release of asbestos. Requests for assistance shall be directed to SHeD

6.2.1 Exposure Limits

GRC's exposure limit for asbestos is 0.01 f/cm^3 of air for an 8-hr time-weighted average and 0.01 f/cm^3 for any 30-min period in a shift. The GRC clearance level is 0.01 f/cm^3 based on a 1800-liter sample of air.

6.2.2 Air Sampling

The National Institute for Occupational Safety and Health (NIOSH) Method 7400 for fibers will be used to assess worker exposures. Area monitoring shall be conducted. Where possible, sampling should be conducted before, during, and after operations. Sampling conducted during a particular work activity should reflect worst-case exposures for the employee. Supervisors and employees shall be notified of the sample results. Where appropriate, transmission electron microscopy analysis will be performed.

Clearance and environmental air sampling will be performed by persons with American Board of Industrial Hygiene certification, or persons with an Ohio Department of Health (ODH) certification as an Asbestos Hazard Evaluation Specialist. All indoor asbestos abatement projects consisting of more than 3 sq. ft or 3 linear ft of material require clearance sampling by a licensed, independent third party.

6.3 Safe Work Practices

Work involving asbestos should be preplanned to control and minimize employee exposure and to protect against the contamination of work surfaces and equipment. For operations that cannot be accomplished using local exhaust ventilation to control exposures, workers must use PPE, as listed in Section **6.5**.

Where necessary, facility and equipment work surfaces will be protected from contamination by plastic sheeting. The area in which work is to be done shall be secured with warning signs and tape to prevent entry of unprotected persons in accordance with the GRC Safety Manual. High-efficiency particulate air (HEPA) filter vacuuming or wet-wiping procedures will be used to clean any debris daily and after a task is completed.

Large-scale tasks involving asbestos abatement of greater than 3 sq. ft or 3 linear ft of material require remediation by an experienced remediation or abatement contractor. All large-scale abatement projects require a final visual inspection and final air monitoring by a licensed, independent third party. Contact SHeD for assistance.

6.4 Engineering Controls

To the extent feasible, priority shall be given to reducing employee exposure by the use of engineering controls such as using local exhaust ventilation and wet methods for activities involving ACM such as installation, removal, cutting, grinding, sawing, and operations that generate airborne fibers and dusts.

Engineering controls such as HEPA-filtered ventilation should be used to remove fibers from breathing zones and to maintain adequate airflow within the work area. Where ACM is in place, it must be enclosed and/or encapsulated to prevent the release of airborne fibers that may result from a physical disturbance or from air moving across the exposed surface.

6.5 Personal Protective Equipment

The following PPE shall be used to prevent occupational exposure to asbestos:

- Disposable coveralls with head covering
- Disposable shoe covers
- Respiratory protection selected on the basis of a hazard assessment of the proposed work (The minimum respirator is an air-purifying type equipped with HEPA cartridges.)
- Eye protection

6.6 Training (*29 CFR 1926.1101*)

- Class I and Class II—Workers and supervisors require EPA Asbestos Hazard Abatement Worker or Asbestos Hazard Abatement Supervisor training (32 or 40 hr), respectively, with annual refresher training (8 hr). The curriculum must include a hands-on training session applicable to the type of asbestos abatement activities that the worker will be performing on the job. In addition, all workers and abatement supervisors must be licensed by ODH. If the worker is to abate only one type of Class II material (e.g., floor tile), the 32-hr training may be waived in favor of an 8-hr course. This training must include a hands-

on session for the specific abatement activity that the worker will perform. For each additional type of Class II material that the worker is expected to abate, an individual 8-hr training session is required.

- Class III—Workers require EPA Operations and Maintenance Training or equivalent (16 hr), with 4 hr annual refresher training. A "competent person" (as defined by EPA and OSHA) must review the curriculum and confirm that it properly prepares the workers for their expected duties. In addition, a competent person shall be certified by ODH as an Asbestos Hazard Abatement Specialist.
- Class IV—Workers require 2 hr of awareness training annually.
- Awareness—General 1-hr awareness training is necessary for those working in areas where asbestos is present.

6.6 - SHeD shall verify requirements for this section to ensure compliance with the Chapter. SHeD verification shall be accomplished by reviewing SATERN records or other personnel training records, as required.

6.7 Medical Surveillance (*29 CFR 1910; NASA NPR 1800.1*)

Individuals using or handling ACM may be required to receive baseline and routine medical examinations, depending on the material used and the extent of exposure. Medical examinations may also be required for approval to wear PPE. An individual requiring an exam, or their supervisor, can contact SHeD or Occupational Medicine Services to receive directions on scheduling the examination.

Any employee involved in an incident where there is known or suspected excessive exposure to asbestos should contact SHeD evaluation and Occupational Medicine Services to arrange for a post exposure exam. This exam will include tests deemed necessary by the facility physician or the NASA Occupational Medicine Services physician.

6.7 - SHeD shall verify requirements for this section to ensure compliance with the Chapter. SHeD verification shall be accomplished by reviewing medical records by a qualified individual, as required.

6.8 Disposal

Contact Waste Management for the disposal of ACMs.

6.9 Recordkeeping (*29 CFR 1910.20*)

In accordance with the requirements of 29 CFR 1910.20, OSHA Employee Access to Medical and Exposure Records Standard, both medical and industrial hygiene sampling records will be made available to affected employees or their representatives. Occupational Medicine Services and/or SHeD, as appropriate, will maintain copies of these records.

7.0 RECORDS

- Hazard assessments.—Maintained by SHeD
- Exposure assessments.—Maintained by SHeD
- Exposure assessment database.—Maintained by SHeD
- Medical examinations.—Maintained by Occupational Medicine Services.
- Facility asbestos survey systems.—Maintained by SHeD
- Asbestos blanket permit data.—Maintained by SHeD

8.0 REFERENCES

Document number	Document name
NPR 1800.1	NASA Procedural Requirement (NPR), NASA Occupational Health Program Procedures
OAC 3701–34	Ohio Administrative Code (OAC), Asbestos Abatement Hazard Rules
29 CFR 1910.20	Occupational Safety and Health Administration, Employee Access to Medical and Exposure Records
29 CFR 1910.1001	Occupational Safety and Health Administration, Occupational Safety and Health Standards, Asbestos
29 CFR 1926.1101	Occupational Safety and Health Administration, Safety and Health Regulations for Construction, Asbestos
40 CFR 61.140 to 61.157	U.S. EPA, National Emission Standard for Hazardous Air Pollutants (NESHAPS); National Emission Standard for Asbestos
40 CFR 763, Subpart E	U.S. EPA, Asbestos Hazard Emergency Response Act
40 FR 13661; April 5, 1984	U.S. EPA, Federal Register (FR), NESHAPS; Amendments to Asbestos Standard, Final Rule
51 FR 62044A; April 25, 1986	U.S. EPA, Federal Register, Toxic Substances Act; Asbestos Abatement Projects; Final Rule

APPENDIX A.—DEFINITIONS AND ACRONYMS

Asbestos abatement.—Activity involving the removal, renovation, enclosure, repair, or encapsulation of asbestos-containing material.

Asbestos.—The asbestiform (fibrous) varieties of chrysotile, amosite, crocidolite, tremolite, anthophyllite, and actinolite.

Asbestos-containing material (ACM).—Material containing more than 1 percent asbestos.

Asbestos-containing building material.—Building material containing more than 1 percent asbestos.

Asbestos Hazard Abatement Specialist.—Ohio-certified person with responsibility for the oversight or supervision of asbestos hazard abatement activities including asbestos project supervisors and foremen.

Asbestos Hazard Abatement Worker.—Ohio-certified person responsible in a nonsupervisory capacity for the performance of an asbestos hazard abatement activity.

Asbestos Hazard Evaluation Specialist.—Ohio-certified person responsible for the identification, detection, and assessment of asbestos-containing materials, the determination of appropriate response actions, or the preparation of asbestos management plans to protect the public from the hazards associated with exposure to asbestos.

Asbestos Hazard Project Designer.—Person who has successfully completed the training requirements for an abatement project designer established by 40 U.S. Code Sec. 763.90(g).

Code of Federal Regulations (CFR)

Class I asbestos work.—Activities involving the removal of thermal system insulation and surfacing asbestos-containing materials and presumed asbestos-containing materials.

Class II asbestos work.—Activities involving the removal of asbestos-containing material that is not thermal system insulation or surfacing material. This includes, but is not limited to, the removal of asbestos-containing wallboard, floor tile and sheeting, roofing and siding shingles, and construction mastics.

Class III asbestos work.—Repair and maintenance operations where asbestos-containing materials, including thermal system insulation and surfacing asbestos-containing materials and presumed asbestos-containing materials, are likely to be disturbed.

Class IV asbestos work.—Maintenance and custodial activities during which employees contact but do not disturb asbestos-containing materials and presumed asbestos-containing materials; activities to clean up dust, waste, and debris resulting from Class I, II, and III activities.

Competent person.—In addition to the definition in 29 CFR 1926.32 (f), one who can identify existing asbestos hazards in the workplace, can select the appropriate control strategy for asbestos exposure, and who has the authority to take prompt corrective measures to eliminate asbestos hazards. In addition, for Class I and Class II work, they must be specially trained in a manner that meets the criteria of the Environmental Protection Agency's (EPA's) Model Accreditation Plan (40 CFR 763) for supervisors, or its equivalent; for Class III and Class IV work, they must be trained on the EPA requirements for local education agency maintenance and custodial staff according to 40 CFR 763.92 (a)(2).

Contracting officer's technical representative (COTR)

Demolition.—Wrecking or removing any load-supporting structural member and any related razing, removing, or stripping of asbestos products.

Environmental Protection Agency (EPA)

Excursion Limit.—Permissible level of airborne fibers specified by OSHA: 1.0 fibers per cubic centimeters of air determined as a 30-min time-weighted average.

Facility asbestos survey system (FASS)

Fiber.—Form of asbestos, 5 μm or longer, with a length-to-diameter ratio of at least 3 to 1.

Federal Register (FR)

Friable asbestos material.—Material containing more than 1 percent asbestos that, when dry, can be crumbled, pulverized, or reduced to powder by hand pressure.

Health and safety plan (HASP)

High-efficiency particulate air (HEPA) filter.—Filter that can trap and retain at least 99.97 percent of all mono-dispersed particles of 0.3 μm in diameter.

Homogeneous area.—Area of surfacing material or thermal system insulation that is uniform in color and texture.

NASA Glenn Research Center (GRC)

NASA Procedural Requirement (NPR)

National Emission Standard for Hazardous Air Pollutants (NESHAPS)

National Institute for Occupational Safety and Health (NIOSH)

Non-friable asbestos material.—Material containing more than 1 percent asbestos that when dry, cannot be crumbled, pulverized, or reduced to powder by hand pressure:

- Category I non-friable asbestos-containing material.—Asbestos-containing packing, gaskets, resilient floor covering, and asphalt roofing products containing more than 1 percent asbestos.
- Category II non-friable asbestos-containing material.—Material, excluding Category I nonfriable asbestos-containing material, containing more than 1 percent asbestos.

National Voluntary Laboratory Accreditation Program (NVLAP)

Occupational Safety and Health Administration (OSHA)

Ohio Administrative Code (OAC)

Ohio Department of Health (ODH)

Personal exposure limit for asbestos.—Level of airborne fibers specified by the Occupational Safety and Health Administration as an occupational exposure standard. It is currently 0.1 fibers per cubic centimeter of air determined as an 8-hr time-weighted average.

Personal protective equipment (PPE)

Plum Brook Station (PBS)

Presumed asbestos-containing material (PACM).—Thermal system insulation, surfacing material, and other materials found in buildings that have not been properly sampled and are assumed to contain asbestos.

Regulated asbestos-containing material.—(1) Friable asbestos-containing material, (2) Category I non-friable asbestos-containing material that has become friable, (3) Category I non-friable asbestos-containing material that will or has been subjected to sanding, grinding, cutting, or abrading, or (4) Category II non-friable asbestos-containing material that has a high probability of becoming, or has become, crumbled, pulverized, or reduced to powder by the forces expected to act on the material in the course of demolition or renovation operations.

Regulated area.—Area established by an employer to demarcate areas where Class I, II, and III asbestos work is conducted; any adjoining area where debris and waste from such asbestos work accumulate; and a work area within which airborne concentrations of asbestos exceed, or there is a reasonable possibility they may exceed, the permissible exposure limit.

Removal.—Operations where asbestos-containing materials and/or presumed asbestos-containing materials are taken out or stripped from structures or substrates, including demolition, renovation, maintenance, and repair operations.

Renovation.—Altering a facility or one or more facility components in any way, including the stripping or removal of regulated asbestos-containing material from a facility component. Operations in which load-supporting structural members are wrecked or taken out for demolition.

Repair.—Overhauling, rebuilding, reconstructing, or reconditioning structures or substrates, including encapsulation or other repair of asbestos-containing materials or presumed asbestos-containing materials attached to structures or substrates.

Safety and Health Division (SHeD)

Standard Operating Procedure (SOP)

Surfacing.—Asbestos-containing material that is sprayed, toweled-on, or otherwise applied to surfaces (such as acoustical plaster on ceilings and fireproofing materials on structural members, or other materials on surfaces for acoustics, fireproofing, and other purposes).

Thermal system insulation.—Asbestos-containing material that is applied to pipes, fittings, boilers, breeching, tanks, ducts, or other structural components to prevent heat loss or gain.

APPENDIX B.—ASBESTOS ABATEMENT AND MAINTENANCE PROGRAMS

B.1 Introduction

The Occupational Safety and Health Administration's (OSHA's) construction standard for asbestos, 29 Code of Federal Regulations (CFR) 1926.1101, requires that each facility engaging in asbestos abatement work perform that work in accordance with OSHA's requirements. This document describes the NASA Glenn Research Center (GRC) Asbestos Abatement and Maintenance Program. It also describes the OSHA asbestos work classifications that apply to abatement and maintenance activities, and the implementation of requirements for workers in restricted areas (whether performing abatement or not) and for employers and employees adjacent to restricted areas.

B.2 OSHA Asbestos Work Classifications for Abatement and Maintenance Activities

Three OSHA categories of asbestos activities performed at GRC and Plum Brook Station (PBS) apply to abatement and maintenance activity:

1. Asbestos abatement is the removal, enclosure, repair, or encapsulation of asbestos-containing materials (ACMs) to minimize the risk of asbestos-related illness. OSHA classifies abatements as Class I and Class II asbestos activities.
2. Asbestos-related maintenance tasks involving the likely or intentional disturbance of ACM meet OSHA's definition of a Class III asbestos activity. All asbestos-related maintenance activities at GRC must be performed in accordance with this appendix. Asbestos-related maintenance at PBS will be performed in accordance with the PBS Asbestos Maintenance Program.
3. Asbestos spill response and cleanup is the act of responding to and cleaning up releases of ACM. This work must be performed in accordance with the spill response and cleanup procedures described in this appendix, as well as with the requirements of an OSHA Class IV asbestos activity.

B.3 Inventory of Asbestos-Containing Building Materials

An inventory of asbestos-containing building materials is maintained by the Safety and Health Division (SHeD). The inventory has been provided to each building manager and is available on computer disks.
The inventory is upgraded by reports from the Facilities Division following their actions to further identify and remove ACMs.

B.4 Handling of Asbestos-Containing Materials

This appendix regulates asbestos exposure in all work as defined in 29 CFR 1910.12(b), including, but not limited to, the following:

- Demolition or salvage of structures where asbestos is present
- Removal or encapsulation of ACMs
- Construction, alteration, repair, maintenance, or renovation of structures, substrates, or portions thereof, that contain asbestos
- Installation of products containing asbestos
- Asbestos spill and emergency cleanup
- Transportation, disposal, storage, containment, and housekeeping activities involving asbestos or products containing asbestos, on the site or location at which construction activities are performed

B.5 Responsibilities of the NASA Responsible Person

The individual planning asbestos abatement tasks (typically, the contracting officer's technical representative (COTR)) must develop OSHA-compliant written procedures specific for the tasks and submit them to SHeD for review. All asbestos abatement work will be designed by an Asbestos Hazard Project Designer certified by the Ohio

Department of Health (ODH). SHeD may be consulted for assistance in developing the procedures. The Asbestos Hazard Project Designer shall approve the procedures prior to initiating work. The Asbestos Hazard Project Designer's review will include the following:

- Compliance with applicable OSHA requirements
- Initial exposure assessment
- Provisions for notifying affected employers of employees in areas adjacent to the asbestos-related work
- Details of control methods that will be used to minimize the release of asbestos fibers into the air and that will be used to decontaminate equipment and workers
- Procedures for proper disposal of all ACM

A copy of the written procedures will be maintained in SHeD along with a copy of the initial exposure assessment and the Asbestos Abatement and Maintenance Program.

The Asbestos Hazard Project Designer and the COTR shall review the contractor's work to ensure that the work is being performed in accordance with established procedures and OSHA standards.

If the control method used has been modified from OSHA requirements, the NASA responsible person ensures that the control method is approved by a Professional Engineer or Certified Industrial Hygienist that is qualified as an Asbestos Hazard Project Designer. SHeD has developed a review check list which may be used as guidance.

Prior to conducting the activity, provide copies of plans for renovation and maintenance to SHeD for review.

The individual planning asbestos abatement tasks (typically, the COTR and Asbestos Hazard Project Designer) must also notify SHeD of all asbestos abatement activities at least 30 days in advance so that the activity may be tracked. This period is also needed to review control procedures and notify the appropriate Government agencies where applicable. If the project does not permit 30-day advance notice (i.e., in an emergency) SHeD must be notified as soon as possible, but no later than the filing of the Environmental Protection Agency (EPA)/OSHA notifications. SHeD will

- If using a control method modified from OSHA requirements for Class I work, notify OSHA, EPA, and ODH in writing 10 days in advance of project startup.
- If performing Class II work for which OSHA has specified a negative pressure work practice, and for which an alternative control method is contemplated, notify OSHA, EPA, and ODH in writing 10 days in advance of project startup.
- Provide information on the location and quantity of ACMs and presumed asbestos-containing materials present in a work area to potential bidders on construction work in the area

B.6 Responsibility of Others

Employers of employees adjacent to construction activities in restricted areas shall be responsible for notifying and protecting their employees under the requirements of 29 CFR 1926.1101.

Asbestos Program

4/1/07

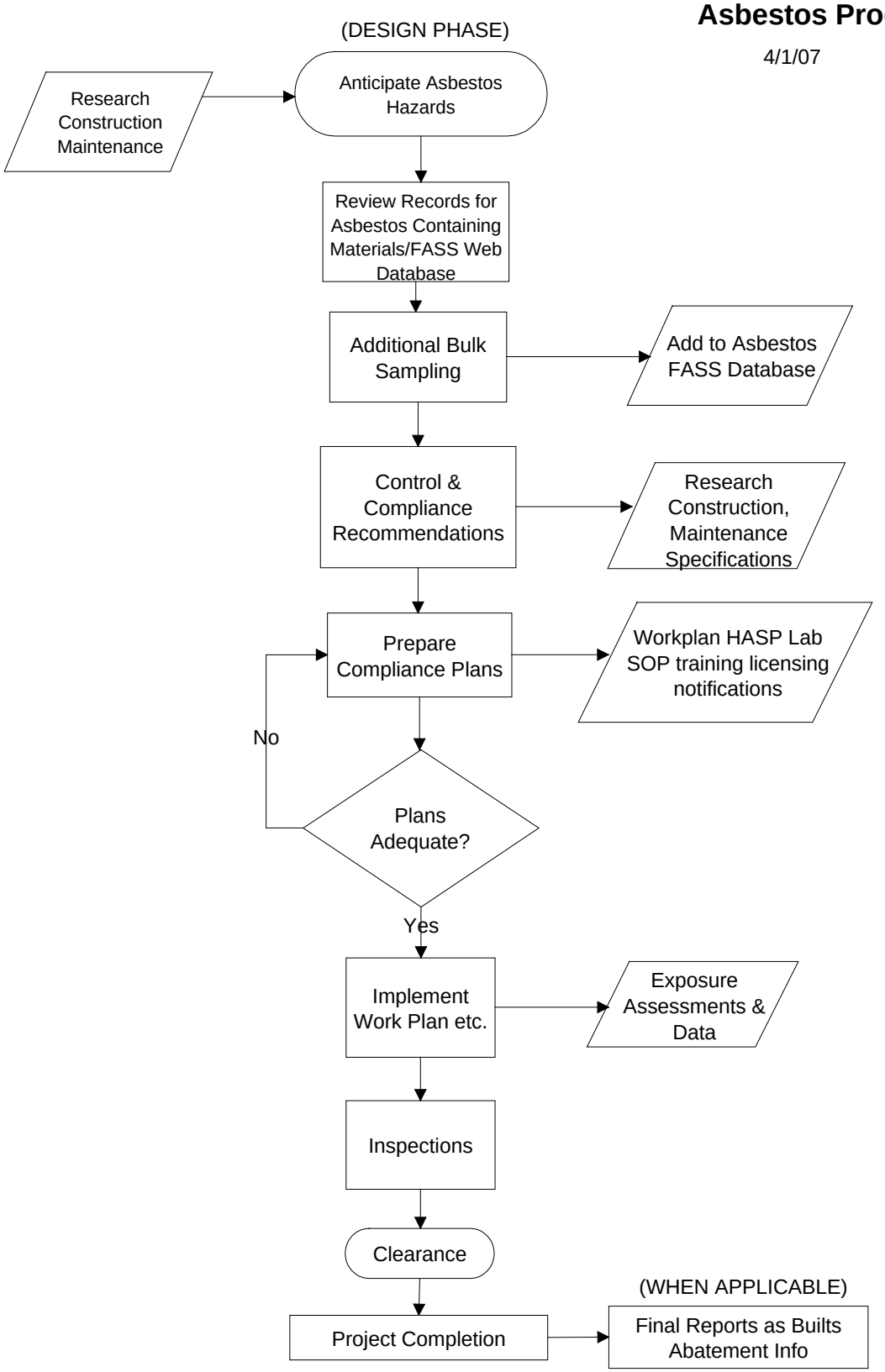

B.7 Notification

The COTR shall be responsible for informing building staff and their employers of asbestos-related activities covered by this rule.

The abatement contractor shall post warning signs at each regulated area.

Employers of employees working in and contiguous to regulated areas shall ensure that employees comprehend the warning signs. GRC shall assist employers by providing annual training for site employees (see the following).

B.8 Additional Information

Any questions concerning asbestos or this asbestos abatement program should be directed to the SHED.

B.9 References

Document number	Document name
Chapter 3701–34 OAC	Ohio Department of Health, Ohio Administrative Code (OAC), Asbestos Abatement Hazard Rules.
29 CFR 1926.1101	Occupational Safety and Health Administration, Safety and Health Regulations for Construction, Asbestos
29 CFR 1910.1001	Occupational Safety and Health Administration, Occupational Safety and Health Standards, Asbestos
40 CFR 61.140 to 61.157	U.S. Environmental Protection Agency (EPA), National Emission Standard for Hazardous Air Pollutants (NESHAPS); National Emission Standard for Asbestos

APPENDIX C.—ASBESTOS HOUSEKEEPING PROGRAM

C.1 Introduction

In 29 Code of Federal Regulations (CFR) 1910.1001, Occupational Safety and Health Standards, Asbestos, the Occupational Safety and Health Administration (OSHA) places certain notification and action requirements on employers and their employees who work in areas where asbestos-containing materials (ACMs) and/or presumed asbestos-containing materials (PACMs) are present. The applicable requirements for workers in nonrestricted areas are the subject of this program.

Under the requirements of the regulations, selected areas in each building may be restricted. These are areas in which GRC has not determined that exposure to airborne asbestos can be maintained below applicable standards.

Housekeeping activities in areas where damaged ACM or damaged suspect ACM is present may be conducted under the procedures outlined in this appendix. If not conducted in accordance with this appendix, they shall be conducted in accordance with the stricter standards of Appendix B.

C.2 Inventory of Asbestos-Containing Building Materials

An inventory of ACMs is maintained by the Safety and Health Division (SHeD). The inventory has been provided to each building manager and is available from SHeD. The inventory is upgraded by reports from the Facilities Division following their actions to further identify and remove ACMs.

C.3 Reporting and Management of Asbestos Spills

- **Asbestos spill prevention**.—Asbestos spill prevention is key to preventing unnecessary employee exposure to asbestos. There are two primary strategies for effective spill prevention: periodic inspection of ACM with prompt repair of any ACM in a deteriorated condition and careful planning to prevent damage to ACM.

  An inspection of the condition of suspect ACM should be included in an organization's periodic safety inspections. Anyone seeing deteriorated suspect ACM should report the damage. Housekeeping staff are especially encouraged to report such deterioration.

- **Reporting asbestos spills**.—Anyone seeing spilled material from deteriorated suspect material should immediately leave the area, close any doors to prevent others from entering the area and dial 911 to report the spill. Please tell the person answering your call that you are reporting an asbestos spill and give the location of the spill and your name and telephone number.

- **Barricades**.—Areas involved in an asbestos spill will be barricaded and isolated by the spill responders in accordance with the GRC Safety Manual to prevent employee exposure and the spread of asbestos contamination to other areas. The spill will then be cleaned up in accordance with applicable standards. Do not enter a barricaded area!

These barricaded areas are restricted areas, as defined by OSHA. If essential work must be done inside a barricaded area, contact SHeD so that procedures can be implemented to ensure that the work is done safely.

C.4 Asbestos Spill Cleanup and Disposal

Any spill response work proposed to be done by a support service contractor, outside contractor, NASA employees, or any other group or organization must be approved by SHeD.

The individual planning spill cleanup tasks (typically, the contracting officer's technical representative (COTR)) must develop OSHA-compliant specific written procedures for the tasks and submit them to SHeD for review. SHeD may be consulted for assistance in developing the procedures and shall approve the procedures prior to initiating work. SHeD's review will include

- Compliance with applicable OSHA requirements.
- Initial exposure assessment completed and submitted for work practice and control approval before the activity starts
- Provisions for notifying affected employers of employees of the asbestos-related work
- Details of control methods that will be used to minimize the release of asbestos fibers into the air and that will be used to decontaminate equipment and workers
- Procedures for proper disposal of all ACM

SHeD will maintain a copy of the written procedures.

The competent person and COTR are accountable for ensuring that the work is performed in accordance with established procedures and OSHA standards.

Spill-response tasks will be performed only by adequately trained personnel. The work must be supervised by an individual meeting OSHA's competent person requirements (29 CFR 1910.1001). Workers must be provided training, exposure monitoring, respiratory protection, and medical surveillance programs that meet OSHA requirements (29 CFR 1926.1101).

Although SHED will provide oversight, the competent person and COTR are accountable for ensuring that the work is performed in accordance with established procedures and OSHA standards.

C.5 Housekeeping in Areas with Asbestos-Containing Spills

By definition, dust and debris in areas that have damaged materials that are OSHA-presumed asbestos must be treated as ACMs. For this reason, areas with significant damage are made inaccessible. Accessible areas that have been and are routinely maintained present an opportunity for management by housekeeping staff who have received 2 to 4 hr of specialized training and who have appropriate equipment. Specifically, SHeD has determined that

- Housekeeping in areas where no damage is present is not an asbestos-related task.
- Housekeeping in areas with damaged ACM or PACM shall not be allowed. Housekeeping staff shall report the damage and cease housekeeping in the area until the damage is assessed, repaired, and cleaned up, or until the material is determined to be asbestos free.

C.6 Notification

Building managers shall inform building staff and their employers, and COTR's shall notify housekeeping staff and their employers, of the presence and location of ACM and PACM. SHeD shall provide the inventory (see the preceding section). Building managers shall post warning signs at each regulated area. SHeD shall provide such signs for posting. Employers of employees working in and contiguous to regulated areas shall ensure that the employees comprehend the warning signs.

C.7 Additional Information

Any questions concerning asbestos or this asbestos maintenance program should be directed to SHeD at 3–3105.

APPENDIX D.—ASBESTOS BRAKE AND CLUTCH REPAIR PROGRAMS

D.1 Introduction

Occupational Safety and Health Administration's (OSHA's) 29 CFR 1910.1001, Occupational Safety and Health Standards, Asbestos, mandates specific preferred or equivalent work practices and engineering control methods that must be implemented during automotive brake and clutch activities where employees may be exposed to elevated levels of airborne asbestos fibers.

Although the continued use of asbestos in brake pads and linings has been reduced over the last decade, there are still circumstances where no adequate substitute is available. Therefore, during automotive maintenance and repair work on brake and clutch systems, exposure to airborne asbestos is still possible.

D.2 Policy

This appendix details work practices and control methods that must be implemented by automotive maintenance and repair management and staff to protect against 8-hr time-weighted average personal exposures to airborne asbestos in excess of 0.01 fibers/cubic centimeters of air.

D.3 Inventory of Asbestos-Containing Automotive Maintenance and Repair Materials

This inventory of all asbestos-containing materials (ACMs) must be updated when, new materials are received or identified which contain asbestos, parts in which asbestos content has been eliminated, or when the use of an asbestos-containing part has been discontinued. For assistance in obtaining information about a product's asbestos content contact Chemical Management at 3–6627 or the Safety and Health Division (SHeD) at 3–5501.

The log of brake and clutch maintenance and repair activities will be used to determine the required asbestos control methods that will be employed for these activities (see the next section). If asbestos content cannot be positively confirmed in any suspect part, it must be assumed to be present until a thorough evaluation is completed. In cases where the presence of asbestos in parts cannot be ensured, control methods as specified in the next section must be followed.

D.4 Control Methods for Brake and Clutch Activities

For facilities that can prove, through documented repair and maintenance records, that there are never more than five pairs of brakes or five clutches that are inspected, disassembled, reassembled, and/or repaired per week, a wet control method as specified by OSHA is acceptable. Requirements follow:

1. A spray bottle, hose nozzle, or other implement capable of delivering a fine mist of water or amended water or other delivery system capable of delivering water at low pressure, shall be used to first thoroughly wet the brake and clutch parts. Brake and clutch components shall be wiped clean with a cloth.
2. The cloth shall be placed in an impermeable container and properly marked or labeled as asbestos-containing waste. After this is accomplished, Waste Management shall be notified at 3–5109 for proper disposal.
3. If a vacuum is to be used during this operation, it must be equipped with high-efficiency particulate air (HEPA) filters. The filters, when full, shall be first wetted with a fine mist of water, then removed and placed immediately in an impermeable container. The container must be properly marked or labeled as an asbestos-containing waste and Waste Management must be notified at 3–5109 for proper disposal.
4. Any spills of aqueous solutions or any asbestos-containing waste shall be cleaned up immediately and put in a properly labeled container. After this is accomplished, Waste Management shall be notified at 3–5109 for proper disposal.
5. The use of dry brushing is prohibited during wet method operations.

6. The use of compressed air to clean dust and debris from surfaces is prohibited during brake and clutch repair.
7. Before attempts are made to dislodge a frozen brake drum, the drum must be thoroughly wetted.

For shops that perform more than five brake or clutch repair or maintenance activities per week, OSHA specifies, and GRC adopts, a low-pressure, wet-cleaning method to control airborne levels of asbestos during automotive brake and clutch repair and maintenance activities. Requirements for this type of control method include the following:

1. A catch basin must be placed under the brake assembly, positioned to avoid splashes and spills.
2. The reservoir shall contain water containing a wetting agent. The flow of liquid shall be controlled such that the brake assembly is gently flooded to prevent the asbestos-containing brake dust from becoming airborne.
3. The aqueous solution shall be allowed to flow between the brake drum and brake support before the drum is removed.
4. After the brake drum is removed, the wheel hub and back of the brake assembly shall be thoroughly wetted to suppress dust.
5. The brake support plate, brake shoes, and brake components used to attach the brake plate shall be thoroughly washed before the old shoes are removed.
6. If a vacuum is to be used during this operation it must be equipped with HEPA filters. The filters, when full, shall be first wetted with a fine mist of water, then removed and placed immediately in an impermeable container.
7. The container must be properly marked or labeled as an asbestos-containing waste and Waste Management must be notified at 3–5109 for proper disposal.
8. Any spill of aqueous solutions or any asbestos-containing waste material shall be cleaned up immediately and put in a properly labeled impermeable container. After this is accomplished, Waste Management shall be notified at 3–5109 for proper disposal.
9. The use of dry brushing is prohibited during low-pressure, wet cleaning operations.
10. The use of compressed air to clean dust from surfaces is prohibited during brake and clutch repair.
11. Before attempts are made to dislodge a frozen brake drum, the drum must be thoroughly wetted.

D.5 Training

All persons who may be required to handle asbestos-containing materials will receive initial training as required by OSHA and Environmental Protection Agency regulations. See Section **6.6**.

D.6 Additional Information

Any questions concerning asbestos or this asbestos maintenance program should be directed to SHeD at 3–3105.

APPENDIX E.—ASBESTOS RECORDS PROGRAM

E.1 Introduction

Occupational Safety and Health Administration's (OSHA's) asbestos standards (29 Code of Federal Regulations (CFR) 1910.1001 and 29 CFR 1926.1101) require NASA to know the presence, extent, and condition of asbestos-containing materials (ACMs) in the workplace. Significant efforts have gone into developing an inventory of asbestos-containing building materials. This document describes the steps to be taken to maintain a coordinated asbestos inventory.

E.2 Inventory of Asbestos-Containing Building Materials

An inventory of ACMs is maintained by the Safety and Health Division (SHeD). The inventory has been provided to each building manager and is available from SHeD. The inventory is updated by SHeD using reports from the Facilities Division following their actions to further identify and remove ACMs.

E.3 Bulk Sampling Requirements

The existing inventory of bulk samples, air samples, and building materials is maintained by SHeD and shall be made available on hard copy and electronically. Maintenance of the inventory requires cooperation and support by everyone who samples and/or abates ACMs.

In support of this need, those conducting sampling are required to consult the inventory prior to sampling to ascertain the known condition of the homogeneous area(s) to be sampled and the extent of the homogeneous areas, in order to plan a sampling program that is cost effective for attaining long-term goals. Only an Asbestos Hazard Evaluation Specialist who certified by the Ohio Department of Health is qualified to collect suspect samples for asbestos analysis.

- All bulk sampling results of building materials collected for analysis of asbestos shall be reported to SHeD.
- Samples collected to document a negative finding of asbestos shall, at a minimum, include three samples of randomly selected locations of the homogenous area. The bulk sample submittal shall note the homogeneous area, sample location, analysis method, and results.
- Sample locations shall be marked and photographed and the material shall be tagged as asbestos if the results show a positive finding in at least one sample.
- All analyses must be done by a laboratory accredited by the National Voluntary Laboratory Accreditation Program (NVLAP).

E.4 Approval of Asbestos Sampling Plan

Before any remediation or abatement activities commence, the contracting officer's technical representative (COTR) shall submit a copy of the contractor's asbestos sampling plan (bulk and air) for approval by SHeD.

E.5 Coordination of Abatement Results

The COTR of any abatement activity shall forward a copy of the final abatement report to SHeD. This report shall document the location and extent of abatement work. The report shall be sufficiently detailed to allow the asbestos inventory to be updated.

Contents

1.0 PURPOSE....2
2.0 APPLICABILITY....2
3.0 BACKGROUND....2
4.0 POLICY....3
5.0 RESPONSIBILITIES....3
5.1 SHeD Hearing Conservation Program Lead....3
5.2 SHeD Environmental Protection or Occupational Health Specialists....4
The SHED Specialists shall....4
5.3 Medical Director, Occupational Medicine Services....4
5.4 IRIS-site Administrator....5
5.5 Supervisors....5
5.6 Employees....5
5.7 Facility Engineers and Research Design Engineers....6
5.8 Research and Test Facility Operations Engineers....6
5.9 Human Capital Development Division Chief....7
5.10 Chief of Procurement....7
5.11 Chief of Safety and Health Division....7
6.0 REQUIREMENTS....7
6.1 Noise Exposure Limits (*NPR 1800.1C, Chapter 4.8.3.3, OSHA 29 CFR 1910.95(b)(1), and 29 CFR 1926.52(d)*)....7
6.2 Assessment of Noise....8
6.2.1 Noise Surveys (*NPR 1800.1C, Chapter 4.8.3.10, OSHA 29 CFR 1910.95(d), 29 CFR 1926.52, and 29 CFR 1910.145*)....8
6.2.2 Employee Exposure Assessments (*NPR 1800.1C, Chapter 4.8.3.10, OSHA 29 CFR 1910.95(d) and (e), 29 CFR 1926.52, 29 CFR 1904.10, and 29 CFR 1904.5*)....8
6.3 Engineering, Operational, and Administrative Control of Noise....8
6.3.1 Engineering Control General (*NPR 1800.1C, Chapter 4.8.3.5 and OSHA 29 CFR 1910.95(b)(1)*)....9
6.3.2 NASA Buy-Quiet/Quiet-by-Design Program (*NPR 1800.1C, Chapter 4.8.3.4*)....9
6.3.3 Operational Control of Noise (*NPR 1800.1C, Chapter 4.1.3.8(o)*)....9
6.3.4 Administrative Controls (*NPR 1800.1C, Chapter 4.8.3.8 and OSHA 29 CFR 1910.95(b)(1)*)....9
6.4 Hearing Conservation Program Enrollment (*NPR 1800.1C, Chapter 4.8.3.2*)....9
6.4.1 HCP Enrollment General (*NPR 1800.1C, Chapter 4.8.3.2 and OSHA 29 CFR 1910.95(c)(1)*)....9
6.4.2 Audiometric Exams (*NPR 1800.1C, Chapter 4.8.3.14 and OSHA 29 CFR 1910.95(g)*)....9
6.4.3 Training (*NPR 1800.1C, Chapter 4.8.3.19 and OSHA 29 CFR 1910.95(k)*)....10
6.5 Personal Hearing Protection (*NPR 1800.1C, Chapter 4.8.34.8.3.9 and OSHA 29 CFR 1910.95(b)(1) and (i)*)....10
6.6 Medical Surveillance (*NPR 1800.1C, Chapter 4.8.3.14–18, OSHA 29 CFR 1910.95(g)(1), 29 CFR 1904.10, and 29 CFR 1904.5*)....10
7.0 RECORDS (*NPR 1800.1C, Chapter 4.8.3.21, OSHA 29 CFR 1910.95(m), 29 CFR 1904.10, and 29 CFR 1904.5*)....11
8.0 REFERENCES....12
APPENDIX A .—DEFINITIONS AND ACRONYMS....13

List of Tables

TABLE 6.1.—NASA NOISE EXPOSURE LIMITS....8
TABLE 6.2.—NASA ABILITY AND RISK EVALUATION CRITERIA....11

Chapter 3—Hearing Conservation Program

NOTE: The current version of this chapter is maintained and approved by the Safety and Health Division (SHeD). The last revision date of this chapter was May 2012. The current version is located on the Glenn Research Center intranet at http://smad-ext.grc.nasa.gov/shed/pub/ohpm/ohpm-manual.pdf. Approved by the Chief of Safety and Health Division.

1.0 PURPOSE

The purpose of this chapter is to provide guidance for employees and supervisors on how to address employee exposure to hazardous noise in the workplace. The chapter provides details for the current procedures and practices set forth by the NASA Glenn Research Center (GRC) Hearing Conservation Program (HCP), as required by the NASA Procedural Requirement for Hearing Conservation. The program's ultimate purpose is to prevent noise-induced hearing loss among GRC employees, contractors, students, and visitors.

2.0 APPLICABILITY

This chapter is applicable to all civil servant and support service contractor (SSC) employees assigned to GRC sites, construction contractors, students, and visitors. SSCs, construction contractors, and visitor employers are responsible for the health and safety of their employees. SSCs with employees who may be working on tasks where the noise exposure levels may equal or exceed the NASA action level of 82 decibels, A-weighted scale (dBA), are required to have their own site-specific, written HCP that meets Federal, state, and NASA requirements. Contractor HCPs shall be developed in accordance with NASA Federal Acquisition Regulation (FAR) Supplement 1852.223–70, Safety and Health, and shall incorporate the full intent in this chapter. Employers shall ensure employees comply with all program requirements including noise hazard assessments, training, personal protective equipment, medical surveillance, NASA Buy-Quiet/Quiet-by-Design, and other requirements as needed, to ensure compliance with NASA policy.

Construction contracts require the submission of a health and safety plan per NASA FAR supplement 1852.223–73 and also require compliance with NASA FAR supplement 1852.223–70. NASA FAR supplement 1823.7001 provides the guidance as to when the 1852.223–70 is required. Construction contractors and all other visitors shall abide by the personal hearing protection requirements and noise exposure limits, as specified in this chapter, by observing and complying with all posted hearing protection requirements.

3.0 BACKGROUND

Noise-induced loss of hearing is an irreversible, sensorineural condition that progresses with exposure. Although hearing ability declines with age (presbycusis) in all populations, exposure to noise produces hearing loss greater than that resulting from the natural aging process. Noise-induced loss is caused by damage to the nerve cells of the inner ear (cochlea) and, unlike some conductive hearing disorders, cannot be treated medically. While loss of hearing may result from a single exposure to a very brief impulse noise or explosion, such traumatic losses are rare. In most cases, noise-induced hearing loss is insidious. Often, physical impairment has occurred before the condition is clearly recognized. Such impairment is usually severe enough to permanently affect a person's ability to hear and understand speech under everyday conditions. There is also evidence to suggest that noise exposure beyond the fifth month of pregnancy may cause hearing loss in the fetus.

GRC, as part of its effort to provide a safe and healthful work environment, is committed to the implementation of a proactive hearing loss prevention program. This written program encompasses all elements of a successful program, including but not limited to the identification of hazardous noise sources, the implementation of engineered noise controls, the NASA Buy-Quiet/Quiet-by-Design program for the purchase or design of new equipment, administrative controls for limiting employee exposures, employee exposure monitoring, employee education, and the early detection of hearing loss through medical surveillance.

4.0 POLICY

The Glenn Research Center's safety and occupational health programs are intended to maintain and protect the health and safety of our workers, as well as to promote employee wellness. This Chapter is based upon applicable laws and regulations, industry standards or other guidelines, as well as agency policy. The agency policy providing guidance for hearing conservation is NASA Procedural Requirement (NPR) 1800.1C, Chapter 4.8 Hearing Conservation. NPR 1800.1C also states that NASA Centers shall comply with OSHA standards promulgated under Section 6 of the OSHA Act of 1970. In addition to complying with the OSHA Occupational Noise Exposure Standard (29 CFR 1910.95), Hearing Conservation Amendment Final Rule and appendices, the Construction Industry Standards and Occupational Noise Exposure (29 CFR 1926.52), and Occupational Injury and Illness Recordkeeping and Reporting Requirements (29 CFR Part 1904.10), the following entities provide current guidance such as consensus and industry standards:

- American Conference of Governmental Industrial Hygienists (ACGIH)
- American National Standard Institute (ANSI)
- National Institute for Occupational Safety and Health (NIOSH)
- Acoustical Society of America (ASA)

Where conflicts exist among other regulations and NASA health and safety requirements, the most protective requirements shall apply. Currently the NASA hearing conservation policy, in most cases, provides the most protective requirements.

5.0 RESPONSIBILITIES

5.1 SHeD Hearing Conservation Program Lead

The SHeD Program Lead shall:

- Complete and maintain the Certification of Occupational Hearing Conservationist (OHC) as administered by the Council for Accreditation of Occupational Hearing Conservation (CAOHC)
- Develop and implement a written HCP, in accordance with NPR 1800.1C, Chapter 4.8, to prevent noise-induced hearing loss among GRC employees, contractors, students, and visitors
- Conduct or facilitate noise hazard assessments to identify hazardous noise areas, operations, and equipment
- Identify, using a hierarchical approach, where engineering controls should be considered. Where the implementation of engineering controls is not feasible, operational and administrative controls and hearing protection shall be specified as needed
- Prioritize, facilitate, and provide results and recommendations to employees and supervisors for employee exposure monitoring and sound level surveys of hazardous noise areas, operations, and equipment
- Provide employees enrolled in the HCP and their supervisors with initial and annual refresher HCP training
- Provide employees with a standard threshold shift (STS) or significant hearing loss concern HCP training or retraining, and a review of work area and work practices to identify strategies to reduce noise exposures to below the action level
- Coordinate with Medical Services, the employee, and the employee's supervisor to complete an investigation for each hearing loss concern, STS, and NASA Ability and Risk concern and ensure follow-up activities are completed
- Provide Medical Services with the industrial hygiene component of STS and significant hearing loss investigations
- Provide the Human Capital Development Division (HCDD) with the course content for the HCP training classes offered and the delivery dates for each fiscal year; forward attendance forms to the HCDD for System for Administration, Training and Educational Resources for NASA (SATERN) recordkeeping of

employee training history; provide a list of employees assigned the SATERN curriculum for Hearing Conservation.

- Provide labeling for hazardous noise areas and equipment
- Maintain a registry of all personnel enrolled in the HCP
- Audit employee compliance and evaluate and maintain the program's effectiveness
- Facilitate the implementation of corrective actions, with employee supervisors, for employees who violate requirements of the HCP or 29 CFR 1910.95 and appendices
- Facilitate implementation of the NASA Buy-Quiet/Quiet-by-Design program for GRC sites
- Support Reproductive Hazards Program Lead in assessing employee noise exposures and the fetus

5.2 SHeD Environmental Protection or Occupational Health Specialists

The **SHeD Specialists** shall

- Assist the SHeD Program Lead with the conduction of sound level surveys and dosimetry
- Assist with the selection, maintenance, and tracking of hearing protection dispensers to ensure adequate hearing protection availability

5.3 Medical Director, Occupational Medicine Services

The Medical Director shall

- Ensure that all audiometric examinations are properly performed, by an audiologist, physician, or CAOHC-certified OHC, appropriate records maintained, and all medical examination results are communicated to the employee as specified in NPR 1800.1C
- Ensure, for employees enrolled in the HCP, baseline, annual, and exit audiometric examinations are conducted and results reviewed and that medical follow-up is made available as needed
- Notify, in writing, the employee, the employer, and the SHeD Program Lead of the need to perform an Ability and Risk Evaluation when the employee has been identified as potentially unable to perform their job safely, due to hearing loss or medical concerns identified by medical examination
- Ensure confirmation audiograms are performed for employees with an identified STS
- Notify, in writing, the employee, the employer, and the SHeD Program Lead, within 21 days, of the determination of an employee STS; STSs shall also be recorded in the Incident Reporting Information System (IRIS)
- Ensure an audiologist or physician with hearing conservation experience reviews problem audiograms, including those showing a STS, and determines whether there is need for further medical evaluation by an otolaryngologist, other qualified physician, or an audiologist
- Coordinate with the SHeD Program Lead, the employee, and the employee's supervisor to complete an investigation for each hearing loss concern, STS, and NASA Ability and Risk concern and any follow-up activities
- Provide medical support for employers to ensure a work-relatedness determination is made for purposes of OSHA recordability by a physician or other licensed health care professional, in consultation with the employer
- Ensure STSs that are confirmed as work-related and thus OSHA recordable are provided to the IRIS-site administrator
- Ensure employees, with a work-related hearing loss, are reexamined for hearing protection fit and effectiveness and refitted as necessary

- Ensure a 6-month follow-up audiogram is performed for employees assigned a new baseline audiogram, as a result of an STS
- Ensure when employees at GRC retain their "work role position" but change employers, due to contract award to a new employer, all medical records applicable to hearing conservation follow them to their new employer, including their current baseline threshold
- Determine whether reassignment to work in a low noise area is indicated to prevent further hearing impairment and shall advise the employer accordingly

5.4 IRIS-site Administrator

The IRIS-site Administrator shall record OSHA-recordable STSs for civil servants, as directed by Medical Services, on the OSHA 300 Log, and maintain the record in accordance with OSHA 29 CFR 1904, Recording and Reporting Occupational Injuries and Illnesses.

5.5 Supervisors

Supervisors of employees exposed to hazardous noise shall

- Ensure employees who have exposure to hazardous noise have completed an instructor-led hearing conservation training class.
- Ensure that employees enrolled in the HCP are in compliance with requirements for annual training and medical surveillance
- Ensure that employees are cognizant of hearing protection requirements in their work area and are notified of noise exposure monitoring results
- Ensure that a variety of appropriate hearing protection devices are available and worn properly by employees exposed to hazardous noise
- Ensure that engineering, operational, and administrative controls are implemented
- Ensure that surveys of noisy areas and equipment have been conducted and that the SHeD Program Lead is notified when changes in operations and/or equipment that may impact noise exposure levels has occurred
- Ensure designated hazardous noise areas are posted and that hazardous noise-emitting tools and equipment are properly labeled with applicable hearing protection requirements
- Coordinate with the SHeD Program Lead to confirm, on an annual basis, employees who are required to be enrolled in the hearing conservation program.
- Refer personnel who complain of hearing loss or other hearing or ear problems to Medical Services for examination
- Ensure that special hearing-protective equipment, such as sound-suppression or noise-cancellation communication headsets, are regularly cleaned, inspected, and maintained
- Ensure the implementation of corrective actions for employees who violate the requirements of the GRC HCP or OSHA 29 CFR 1910.95
- Attend annual hearing conservation training as required for supervisors
- Coordinate with Medical Services, the SHED Program Lead, and the employee to complete an investigation for each hearing loss concern, STS, and NASA Ability and Risk concern and any follow-up activities

5.6 Employees

Employees shall

- Ensure all purchases of equipment, for which noise emissions are expected to exceed 80 dBA, shall be made in accordance with the Buy-Quiet requirements

- Notify supervisors or the SHeD Program Lead of any areas, operations, or equipment in their work area that may produce hazardous noise
- Facilitate noise surveys with the SHeD Program Lead or SHeD specialists; assist with the scheduling an d completion of employee noise dosimetry
- Avoid high levels of noise exposure, or don hearing protection to reduce noise exposure, during the 14-hr period preceding the initial, termination, and STS follow-up audiometric exams
- Complete a baseline and annual STS confirmation if needed, and program termination audiometric exams
- Complete initial and annual refresher hearing conservation training
- Consistently use and maintain hearing protection devices that meet the task-specific recommended noise reduction rating (NRR)
- Adhere to the established engineering, operational, and administrative noise controls
- Ensure special hearing-protective equipment, such as sound-suppression or noise-cancellation communication headsets, is regularly cleaned, inspected, and maintained

5.7 Facility Engineers and Research Design Engineers

Facility Engineers and Research Design Engineers shall

- Implement GRC Buy-Quiet/Quiet-by-Design protocols, as specified in this program by
    - Considering acoustics in the design and modifications of buildings and research facilities
    - Ensuring the selection of all building and research support equipment, that is expected to produce noise that approaches hearing conservation levels of 80 dBA and higher under a variety of site and operational considerations, incorporates the Buy-Quiet/Quiet-by-Design criteria
    - Ensuring the design, development, selection, and purchase of aeronautical and space hardware, tools, support equipment, engineering controls, and associated procedures minimizes employee exposure to noise levels at or above 85 dBA
- Plan, schedule, and conduct maintenance and construction operations to minimize unprotected exposure to noise levels at or above 85 dBA
- Design and apply engineering controls to retrofit existing hazardous noise-emitting equipment, as necessary, to reduce noise exposures below 85 dBA or to the maximum extent feasible
- Maintain noise-producing equipment and controls to prevent increases in noise levels (Vibrations, worn gears, bad bearings, unbalanced fans, corroded mufflers, non-lubricated fittings, and vibrating pipes can all contribute to high noise levels.)

5.8 Research and Test Facility Operations Engineers

Research and Test Facility Operations Engineers shall

- Ensure that surveys of noisy areas and equipment have been conducted and that the SHED Program Lead has been notified of changes in operations and/or equipment that may impact noise exposure levels
- Plan, schedule, and conduct research and test operations to minimize unprotected exposure to noise levels at or above 85 dBA
- Ensure that operational plans incorporate hearing conservation requirements
- Ensure that engineering, operational, and administrative controls are implemented
- Ensure that designated hazardous noise areas and hazardous noise-emitting tools and equipment are properly labeled with hearing protection requirements
- Ensure that appropriate hearing protection devices are available for use for visitors or transient personnel, as required

- Maintain noise-producing equipment and controls to prevent increases in noise levels

5.9 Human Capital Development Division Chief

The HCDD Chief shall

- Ensure employee hearing conservation training records are maintained in SATERN
- Ensure the SATERN Hearing Conservation Training curriculum is current and activated to issue annual training reminders for CS employees active in the Hearing Conservation Program, as determined by the SHeD Program Lead

5.10 Chief of Procurement

The Chief of Procurement shall ensure that Buy-Quiet/Quiet-by-Design provisions are included in all GRC contracts and in the purchase of new equipment, as appropriate.

5.11 Chief of Safety and Health Division

The Chief of SHeD shall:

- Ensure a qualified individual is identified as the Hearing Conservation Program Lead, to carry out the responsibilities set forth in the GRC Hearing Conservation Program. The qualified individual shall be identified by the organization tasked with the implementation of the Hearing Conservation Program.
- Provide support to the SHeD Program Lead in the performance of their duties to ensure and maintain the effectiveness of the hearing conservation program
- Maintain HCP records and documentation provided by the SHeD Program Lead

6.0 REQUIREMENTS

6.1 Noise Exposure Limits (*NPR 1800.1C, Chapter 4.8.3.3, OSHA 29 CFR 1910.95(b)(1), and 29 CFR 1926.52(d)*)

NASA's maximum occupational exposure level for noise, the criterion sound level, is equivalent to 85 dBA, as a time-weighted average (TWA) exposure, measured on the A-weighted scale, set to slow response, using a 3 dB exchange rate; the action level is 82 dBA, TWA or equivalently, a dose of 50 percent. The maximum occupational exposure level for employees who have demonstrated a work-related STS is a more stringent limit of 82 dBA, TWA; the maximum occupational exposure level for employees who experience a second (subsequent) work-related STS is 79 dBA.

All personnel who enter areas or perform tasks where exposure to noise is greater than or equal to 82 dBA, regardless of the duration of exposure, shall be provided with personal hearing protection. All personnel who enter designated hazardous noise areas or who perform tasks where exposure to noise is greater than or equal to 85 dBA or 140 dB peak, regardless of the duration of exposure or number of impulses, shall be provided with and required to wear personal hearing protection.

Table **6.1** lists NASA's allowable noise exposure limits, as a function of exposure level and exposure time. Employee exposures exceeding the equivalent exposures in Table **6.1** shall be controlled, reduced, or eliminated through a hierarchical combination of engineering controls, administrative controls, and hearing protection devices.

6.1 – Documentation of compliance with noise exposure limits is found in the HCP Noise Survey Reports and the Noise Exposure Assessments (dosimetry), kept in the HCP program files and on the SHeD server, by building or facility

TABLE 6.1.—NASA NOISE EXPOSURE LIMITS

Exposure level, dB(A)	Noise duration, hr	Noise duration, min
82	16	0
85	8	0
88	4	0
91	2	0
94	1	0
97	0	30
100	0	15

6.2 Assessment of Noise

6.2.1 Noise Surveys (*NPR 1800.1C, Chapter 4.8.3.10, OSHA 29 CFR 1910.95(d), 29 CFR 1926.52, and 29 CFR 1910.145*)

The SHeD Program Lead with the assistance of SHeD Specialists shall survey noisy areas and equipment to identify and assess hazardous noise areas and hazardous noise-emitting equipment. Noise survey results and recommendations shall be posted on the SHeD Website, Hearing Conservation page, and shall be forwarded to all affected personnel, as indicated by the supervisor, facility manager, or research and test personnel. Noise surveys shall be conducted when any information, observation, or calculation indicates that an employee may be exposed to noise at or above the action level. Hazardous noise is defined as environmental noise equal to or exceeding of 85 dBA. Noise surveys shall be done to document representative noise exposures, to respond to employee complaints of excessive noise, or where it is difficult to understand normal conversation when the speaker and listener face each other at a distance of 3 ft.

Noise surveys shall be conducted whenever there are changes to facilities, equipment work practices, procedures, or noise-control measures that may alter potential noise exposures. Any new equipment, operation, job, or procedure with the potential for creating noise levels above 80 dBA should be evaluated with regard to noise emissions prior to startup. All continuous, intermittent, and impulse sound levels from 80 dB to 140 dBA shall be integrated into the noise measurements. A priority sampling of hazardous noise areas shall be surveyed and documented yearly.

All hazardous noise areas, as well as tools and equipment, shall be posted with signs to clearly indicate the presence of hazardous noise and the hearing protection requirements.

6.2.2 Employee Exposure Assessments (*NPR 1800.1C, Chapter 4.8.3.10, OSHA 29 CFR 1910.95(d) and (e), 29 CFR 1926.52, 29 CFR 1904.10, and 29 CFR 1904.5*)

Employee exposure monitoring shall be conducted when a noise survey shows that any employee or group of employees may be exposed to noise equal to or exceeding the action level of 82 dBA, TWA. To determine employee exposure to noise an estimated occupational exposure level may be derived from the noise survey data of the hazardous noise source(s) and areas, coupled with the employees' exposure time(s) to the noise. Where circumstances such as high worker mobility, significant variations in sound level, or a significant component of impulse noise make area monitoring generally inappropriate, representative personal noise dosimetry shall be conducted. The employee exposure assessments shall be used to determine hearing conservation enrollment, the need for engineering, operational, and administrative controls, and hearing protection equipment requirements.

Monitoring results shall be provided to affected employees, their immediate supervisors, and Medical Services. Monitoring shall include the evaluation of the presence of compounding hearing-related circumstances present in the environment such as solvents, heavy metals, carbon monoxide, heat, and vibration. Noise exposure monitoring should be repeated whenever any changes to facilities, equipment, work practices, procedures, or noise control measures alter potential noise exposures.

6.2 – Documentation of noise exposure assessments is found in the HCP Noise Survey Reports and the Noise Exposure Assessments (dosimetry), kept in the HCP program files and on the SHeD server, by building or facility

6.3 Engineering, Operational, and Administrative Control of Noise

6.3.1 Engineering Control General (*NPR 1800.1C, Chapter 4.8.3.5 and OSHA 29 CFR 1910.95(b)(1)*)

Engineering controls shall be the first and primary means of controlling hazardous noise. Engineering controls should attempt to reduce noise emissions, measured at operator position or equivalent, below 85 dBA. Where feasible, facilities and equipment shall be procured, designed, operated, and/or modified to reduce or maintain environmental noise exposure below 85 dBA. Any reduction in noise level, even if it is not below 85 dBA, is beneficial. If engineering controls fail to reduce sound levels below 85 dBA, hearing protective equipment and/or administrative controls must be used.

6.3.2 NASA Buy-Quiet/Quiet-by-Design Program (*NPR 1800.1C, Chapter 4.8.3.4*)

The NASA Buy-Quiet/Quiet-by-Design program is a progressive and integral part of the of the NASA commitment to implement a proactive hearing loss prevention program. The program encompasses the design and development or selection and purchase of a broad variety of fixed and portable equipment purchased for use by centers, including equipment purchased by contractors. Equipment expected to produce noise that approaches hearing conservation levels of 80 dBA and higher, under a variety of site and operational considerations shall be subject to a Buy-Quiet/Quiet-by-Design analysis during the design phase or prior to purchase.

6.3.3 Operational Control of Noise (*NPR 1800.1C, Chapter 4.1.3.8(o)*)

In addition to causing hearing impairment, noise can interfere with communication, disturb sleep, cause cardiovascular and psycho-physiological effects, reduce performance, and provoke annoyance responses and changes in social behavior. Research and test facility operations where emitted noise may result in an employee noise exposure concern or a community noise concern may be subject to GRC operational plan restrictions to address such concerns.

6.3.4 Administrative Controls (*NPR 1800.1C, Chapter 4.8.3.8 and OSHA 29 CFR 1910.95(b)(1)*)

Where the highest rated hearing protective equipment (plugs plus muffs) or engineering controls are not sufficient to attenuate employee exposure to noise, as required, the duration of time spent in the noise hazard area shall be limited so as not to exceed the default maximum exposure limit (with hearing protection) of 85 dBA TWA. This limit is 82 dBA for employees who have demonstrated a persistent work-related STS and 79 dBA for employees sustaining two subsequent work-related STSs.

6.3 -Documentation of employee compliance with the implementation of engineering controls, Buy-Quiet/Quiet-by-Design program, and operational and administrative control of noise is found in the HCP Noise Survey Reports, and GRC Safety Permit requirements. The records are kept in the HCP program files, on the SHeD server, and in the SHeD Safety Permit files.

6.4 Hearing Conservation Program Enrollment (*NPR 1800.1C, Chapter 4.8.3.2*)

6.4.1 HCP Enrollment General (*NPR 1800.1C, Chapter 4.8.3.2 and OSHA 29 CFR 1910.95(c)(1)*)

Employees exposed to noise equal to or exceeding the NASA action level, of 82 dBA TWA, for 30 or more days per year, or can be expected to be exposed to 85 dBA TWA for any 1 day, an equivalent dose, shall be enrolled in the HCP. Exposures shall be computed without regard to any attenuation provided by the use of personal protective equipment. Due to the transient nature of personnel, supervisory input, with regard to employee job duties, is solicited annually to support program enrollment decision-making.

6.4.2 Audiometric Exams (*NPR 1800.1C, Chapter 4.8.3.14 and OSHA 29 CFR 1910.95(g)*)

Medical surveillance is a critical component of the HCP for it allows for the early detection of hearing loss. All employees who are enrolled in the HCP shall receive a baseline audiometric exam before beginning work in hazardous noise areas or, within 30 days of initial exposure to hazardous noise. Annual audiometric exams shall be completed thereafter, as long as the employee remains enrolled in the HCP; a program termination audiometric exam is conducted for employees exiting the program. Employees shall avoid high levels of noise exposure, or don hearing protection to reduce noise exposure, during the 14-hr period preceding initial, termination, and STS follow-up audiometric evaluations.

6.4.3 Training (*NPR 1800.1C, Chapter 4.8.3.19 and OSHA 29 CFR 1910.95(k)*)

Employees enrolled in the HCP and their supervisors shall complete the initial and annual refresher HCP training. The initial class shall be instructor-led; annual refresher training can be SATERN web-based or a training video as determined by SHeD. Training classes are offered on a monthly basis through SATERN. Training is also conducted on a branch-, project-, or contractor-specific basis, as requested.

6.4 – Documentation of employee compliance with HCP enrollment, audiometric exams, HCP training is found in the HCP Noise Survey reports, HCP Medical Records, HCDD HCP training records. The records are kept in the HCP program files and on the SHeD server, with the exception of medical records which are kept by Medical Services, and the employee training records which are kept in SATERN and accessible by the reporting function of the an administrative SATERN session.

6.5 Personal Hearing Protection (*NPR 1800.1C, Chapter 4.8.34.8.3.9 and OSHA 29 CFR 1910.95(b)(1) and (i)*)

Hearing protection devices shall be used only where engineering controls are not feasible or practical. Personnel who are exposed to noise levels equal to or greater than 82 dBA, regardless of duration, shall be provided with personal hearing protection. All personnel who enter designated noise hazardous areas or who perform tasks where exposure to noise is equal to or greater than 85 dBA or 140 dB peak, regardless of duration of exposure, shall be provided with and required to wear hearing protection.

Hearing protection selection and use shall be discussed during each HCP training session. Individual hearing protection fit shall be audited during the HCP annual audiometric exam. Hearing protection devices selected shall attenuate employee noise exposure to an 8-hr, TWA of 85 dBA or less. For employees with one work-related STS or two subsequent work-related STSs, the hearing protection devices must attenuate noise exposure at the ear to a level of 82 or 79 dBA, respectively.

Estimation of the adequacy of hearing protector attenuation shall be based on the NASA derating criteria for the published noise reduction rating (NRR); the required NRR = [(measured ambient sound level – 85) × 2] + 7. Alternatively, where employees have high worker mobility or significant variations in sound level exposures, representative personal noise dosimetry shall be conducted to provide a TWA exposure. For employees with representative noise dosimetry, the required NRR = [(TWA – 85) × 2] + 7.

Use of hearing protection shall be mandatory where requirements are posted, and shall be enforced by supervisors. A selection of hearing protection devices shall be available from GRC stock, and a hearing protection stock listing shall be posted on the SHeD Hearing Conservation Web site.

Special hearing-protective equipment such as sound suppression or noise cancellation communication headsets shall be regularly inspected for damage or unauthorized modifications; headsets not permanently issued to individuals shall be cleaned and sanitized before reissuance.

6.5 – Documentation of the use of personal hearing protection is found in the HCP Noise Survey reports and HCP Program reviews. The records are kept in the HCP program files and on the SHeD server.

6.6 Medical Surveillance (*NPR 1800.1C, Chapter 4.8.3.14–18, OSHA 29 CFR 1910.95(g)(1), 29 CFR 1904.10, and 29 CFR 1904.5*)

Medical surveillance includes, but is not limited to, a baseline, an annual, and a termination audiometric exam for employees enrolled in the HCP. Civil servant employees not enrolled in the HCP are offered an audiometric exam on a triennial basis.

The purpose of HCP medical surveillance is the early detection of significant hearing loss. OSHA defines a significant hearing loss as a STS. A STS is a hearing loss of 10 dB or greater (as compared to the employees baseline audiogram), derived from an average of the audiometric results for 2000, 3000, and 4000 Hertz, and the loss is 25 dB above audiometric zero. For employees who have sustained a STS, SHeD conducts a hearing loss assessment, in conjunction with the employee, the employee's supervisor, and Medical Services to determine if the hearing loss is work-related and to evaluate current noise exposure and hearing protection use to prevent further hearing loss. A review of hazardous noise sources and controls, employee exposures to noise, ototoxic substances

and medications, as well as a review of work practices and procedures shall be conducted whenever an employee experiences a STS. Employees shall be referred by the Medical Director to an audiologist or other physician knowledgeable in hearing conservation for further evaluation as needed.

If during any medical evaluation or audiometric examination, an employee is identified as potentially unable to perform their job safely, or has a hearing profile equal to or worse than that listed in Table **6.2**, then the employee, the employer, and the SHeD Program Lead shall receive written notification that an Ability and Risk Evaluation is required. Medical Services and the SHeD Program Lead shall coordinate with the employee and the employee's supervisor to ensure an Ability and Risk Evaluation is conducted and follow-up activities are completed.

TABLE 6.2.—NASA ABILITY AND RISK EVALUATION CRITERIA

Frequency (Hz)	500	1000	2000	3000	4000	6000
Hearing Level (dB)	25	25	25	35	45	45

The GRC Occupational Medical Director shall determine if reassignment to work in a low-noise area is indicated to prevent further hearing impairment and shall advise the employer accordingly.

When employees at GRC retain their "work role position" but change employers due to contract award to a new employer, all medical records applicable to hearing conservation follow them to their new employer, including their current baseline threshold.

6.6 – Documentation of compliance with the annual HCP medical surveillance requirements, STS concerns and Ability and Risk reviews is located in the employee Medical Record files kept by Medical Services

7.0 RECORDS (*NPR 1800.1C, CHAPTER 4.8.3.21, OSHA 29 CFR 1910.95(M), 29 CFR 1904.10, AND 29 CFR 1904.5*)

SHeD shall ensure compliance with recordkeeping and access information requirements, as per NPR 1441.1, NASA Records Retention Schedules and Privacy Act requirements. Records to be maintained shall include

- Registry of HCP enrollment (annual).—Maintained on SHeD server and HCP files.
- Noise Exposure Assessments (dosimetry).— Maintained on SHeD server and HCP files.
- Noise Survey Reports — Maintained on SHED server, HCP files, posted on SHeD website
- Medical Records.—Maintained by Medical Services.
- SHED STS and Hearing Loss documentation —Maintained by SHeD HCP SBU files.
- HCP training records.—Maintained by the HCDD.
- HCP program review and audit documentation.—Maintained on SHeD server.

8.0 REFERENCES

Document Number	Document Name
ACGIH	American Conference of Governmental Industrial Hygienists, Threshold Limit Values (TLV®) -Occupational Exposure Guidelines for Chemical Substances and Physical Agents, and Biological Exposure Indices (BEIs®) for chemical substances.
29 CFR 1910.95	OSHA General Industry Standards, Occupational Noise Exposure and Hearing Conservation
29 CFR 1904.5	OSHA, Recording and Reporting Occupational Injuries and Illness: Determination of work-relatedness
29 CFR 1904.10	OSHA Occupational Injury and Illness Reporting and Recordkeeping Requirements
29 CFR 1926.52	OSHA, Construction Industry Standards and Occupational Noise Exposure
29 CFR 1910.145	OSHA accident prevention signs and tag requirements
NPR 1800.1, Chapter 4.8	NASA Occupational Health Program Procedures, Chapter 4.8, Hearing Conservation
NPR 1441.1	NASA Records Retention Schedules and Privacy Act Requirements, Administrative Management Programs, Records Management
NASA FAR Supplement	Safety and Health 1852.233–70

APPENDIX A.—DEFINITIONS AND ACRONYMS

OSHA and NASA Hearing Conservation Program definitions are also located in OSHA 29 CFR 1910.95, Appendix 1 and NASA NPR 1800.1, respectively.

Ability and Risk Evaluations.—Evaluations performed for the purpose of determining a worker's ability to perform specific job tasks (ability) and the likelihood of harm, either to the worker or others (risk), in relation to anticipated workplace exposures and job demands. Also includes the processes used to evaluate the ability of individuals to safely perform essential duties, if placed in a noisy work environment, and not pose a health or safety risk to themselves or others.

Action level.—A noise dose of 50 percent is designated as the action level, or the point at which the hearing conservation policy requires implementation of a continuing, effective hearing conservation program. The NASA action level is 82 dBA, measured as an 8-hr time-weighted average (TWA). A noise dosimeter (preferred) or sound level meter is used for measurement, and the instrument is programmed for the A-weighted scale set to slow response, with a 3-dB exchange rate. Employees with exposures equal to or greater than the NASA action level of 82 dBA TWA, for 30 days or more per year, are required to be enrolled in a hearing conservation program.

Administrative control.—Any procedure that limits noise exposure by restricting access to noise areas or by control of exposure times, distance, and/or work practices.

Audiogram.—A chart, graph, or table resulting from an audiometric test showing an individual's hearing threshold levels for specific frequencies.

Baseline audiogram.—The reference audiogram against which future audiograms are compared, typically resulting from an audiometric evaluation conducted at the time the employee is enrolled in the hearing conservation program. The baseline audiogram for one or both ears is replaced if the employee's hearing thresholds demonstrate either a persistent standard threshold shift or a persistent improvement as defined in NASA Procedural Requirement 1800.1, Chapter 4.8.3.l5.

Baseline, revised.—The most recent audiogram that has established a persistent STS upon retest, or a significant improvement, that is used as the basis of comparison for future audiograms. Since ears are considered separately when making baseline revisions, it is possible for someone to have baseline audiograms from different years.

Buy-Quiet and Quiet-by-Design Program.—A program that endeavors to achieve long-term reduction of employee noise exposures through purchase and design of equipment with the intention of achieving realistic and achievable noise criteria, which are considered before procurement or design, using criteria based on operational conditions as well as the noise outputs of equipment. The Buy-Quiet and Quiet-by-Design approach requires designers and engineers to consider noise emission when purchasing and designing equipment that is expected to generate noise emission levels of concern for hearing conservation (80 dBA and higher).

Code of Federal Regulations (CFR)

Council for Accreditation of Occupational Hearing Conservation (CAOHC)

Criterion sound level.—An exposure level of 85 dBA time-weighted average (NASA's maximum occupational exposure level).

Decibel A-weighted (dBA).—A sound level reading in decibels made on the A-weighted network of a sound level meter at slow response.

Decibels, peak (dBP).—The highest instantaneous sound level measured. Commonly used to measure impulsive or impact noise. This quantity cannot be measured on the slow response A-weighted scale.

Derating.—The process of reassigning the manufacturers' values of hearing protectors to more realistic, real-world performance values. NASA derates the published manufacturer noise reduction rating (NRR) for hearing protection devices according to the following formula:

NASA required NRR = [(noise exposure level dBA – 85) × 2] + 7.

Engineering control.—Any mechanical device or physical barrier that reduces the sound level at the source of noise generation or along the path of propagation of the noise to the potentially exposed individual. This does not include personal protective equipment such as earmuffs or plugs or administrative controls.

Exchange rate (doubling rate).—The NASA Hearing Conservation Program exchange rate is 3 dBA. The exchange rate is the trade-off relationship between an increase (or decrease) in sound level and the corresponding change in the allowed exposure duration. When the sound level increases by the decibel value of the exchange rate, the allowed exposure duration is halved. For the 3dB exchange rate, that NASA and most of the world uses, every time the sound power doubles, the measured level increases by 3dB. OSHA currently uses a 5dB exchange rate.

Federal Acquisition Regulation (FAR)

Glenn Research Center (GRC)

Hazardous noise area.—Any work--- area where the environmental noise level is at or above 85 dBA, or where the environmental impulse noise level is at or above 140 decibels on a C-weighted scale, regardless of duration of exposure or number of impulses.

Hearing Conservation Program (HCP).—A proactive hearing loss prevention program.

Hertz (Hz).—Unit of measurement of frequency, numerically equal to cycles per second.

Human Capital Development Branch (HCDB)

Industrial hygienist (IH).—A professional tasked with the anticipation, recognition, evaluation, and control of health hazards in the workplace.

Impulsive or impact noise.—Variations in noise levels that involve peaks of intensity that occur at intervals of greater than 1 second. If the noise peaks occur at intervals of 1 second or less, the noise is considered continuous.

Incident Reporting Information System (IRIS)

Medgate – A software program implemented by NASA headquarters for NASA Centers to track and manage employee medical records and industrial hygiene workplace exposure data.

NASA Procedural Requirement (NPR)

Noise dose.—A measure of cumulative noise exposure over a stated time period, which takes into account both the intensity of sound and the duration of exposure. Dose is a dimensionless quantity that represents the amount of actual noise exposure relative to the amount of allowable noise exposure (NASA criterion level) and for which 100 percent and above represents noise exposures that are hazardous.

Noise dosimeter.—An instrument that integrates a function of sound pressure over a period of time in such a manner that it directly indicates a noise dose.

Noise reduction rating (NRR).—A noise reduction value, in decibels, averaged across the frequencies from 125 Hz to 8 kHz, computed from laboratory tests of the attenuation of hearing protectors measured under ideal conditions. The NRR, per a 1979 Environmental Protection Agency regulation, is required to appear on all devices worn on the head or ear that are sold for purposes of personal noise reduction.

Noise survey.—A periodic or event-driven investigation of a hazardous noise, standard threshold shift, or other driving condition for the purposes of determining the noise levels, frequencies, and other sound characteristics as they relate to employee exposure.

Occupational Hearing Conservationist (OHC).—Also known as an industrial audiometric technician. A person who is certified by the Council on Accreditation for Occupational Hearing Conservation (CAOHC) and conducts the practice of hearing conservation, including pure-tone air-conduction hearing testing and other associated duties under the supervision of an audiologist or physician.

Operations Team (Ops Team)

Occupational Safety and Health Administration (OSHA)

Plum Brook Station Team (PBS Team)

System for Administration, Training and Educational Resources for NASA (SATERN)

Safety and Mission Assurance Directorate (SMAD)

Safety and Health Division (**SHeD)**

Sound level meter.—An instrument for the measurement of sound levels.

Support service contractor (SSC)

Standard threshold shift (STS).—A decline in hearing threshold of 10 dB or more from the baseline audiogram at 2000, 3000, and 4000 Hz (average) in either ear.

Time-weighted average (TWA).—The sound level, which if constant over an 8-hr exposure, would result in the same noise dose as is measured.

Contents

1.0 PURPOSE 2
2.0 APPLICABILITY 2
3.0 BACKGROUND 2
4.0 POLICY 2
5.0 RESPONSIBILITIES 3
5.1 SHeD Respiratory Protection Program Lead 3
5.2 SHeD Environmental Protection or Occupational Health Specialists 3
5.3 Supervisor of Respirator User 4
5.4 Respirator Users 4
5.5 Medical Director, Occupational Medicine Services 4
5.6 Human Capital Development Division Chief 5
5.7 Safety and Health Division Chief 5
6.0 REQUIREMENTS 5
6.1 Hazard Assessment (*OSHA* 29 CFR 1910.132*(d) and 29 CFR 1910.134(d)*) 5
6.2 Exposure Assessment (*OSHA 29 CFR 1910.134(d)*) 6
6.3 Selection of Respirators (*OSHA 29 CFR 1910.134(d)*) 6
6.3.1 General Requirements 6
6.3.2 Air-Purifying Respirators for Non-Immediately Dangerous to Life or Health Atmospheres (*OSHA 29 CFR 1910.134(d)(3)*) 6
6.3.3 Voluntary Use of Disposable Filtering Facepiece Respirators (*OSHA 29 CFR 1910.134, Appendix D*) 7
6.3.4 Atmosphere-Supplying Respirators for IDLH Atmospheres (*29 CFR 1910.134 (d)(2)*) 7
6.4 Medical Evaluation (*29 CFR 1910.134 (c)(1)(ii) and Appendix C and NASA NPR 1800.1, Chapter 2.9*) 8
6.5 Training (*29 CFR 1910.134 (k)*) 8
6.6 Fit Testing (*OSHA 29 CFR 1910.134 (f) and Appendix A*) 9
6.7 Use of Respirators (*OSHA 29 CFR 1910.134 (g) and Appendix B–1*) 9
6.7.1 General 9
6.7.2 Use of Respirators in IDLH Atmospheres (*OSHA 29 CFR 1910.134 (g)*) 10
6.8 Care and Maintenance of Respirators (*OSHA 29 CFR 1910.134 (h) and Appendix B–2*) 10
6.8.1 Respirator Inspections 11
6.8.2 Additional Care and Maintenance for Atmosphere-Supplying Respirators (*NFPA 1852, CGA 7.1, and DOT 49 CFR Part 178*) 11
6.8.3 Emergency Escape-Only Respirators (*OSHA 29 CFR 1910.134(c)(1)(iv)*) 12
6.9 Program Evaluation (*OSHA 29 CFR 1910.134(l)*) 12
6.10 Compliance 12
7.0 RECORDS 12
8.0 REFERENCES 13
APPENDIX A .—DEFINITIONS AND ACRONYMS 14
APPENDIX B .—RESPIRATORY PROTECTION PROGRAM (RPP) FLOWCHART 17
APPENDIX C .—VOLUNTARY USE OF DISPOSABLE FILTERING FACEPIECE RESPIRATORS (DUST MASKS or N95) 18

Chapter 4—Respiratory Protection Program

Note: *The current version of this chapter is maintained and approved by the Safety and Health Division (SHeD). The last revision date of this chapter was May 2012. The current version is located on the Glenn Research Center intranet at http://smad-ext.grc.nasa.gov/shed/pub/ohpm/ohpm-manual.pdf. Approved by Chief of Safety and Health Division.*

1.0 PURPOSE

The purpose of this chapter is to provide guidance for employees and supervisors on how to address potential respiratory hazard concerns in the workplace and to provide for the safe use of respiratory protection equipment. This Chapter details the current procedures and practices for the selection and use of respiratory protection at the NASA Glenn Research Centers Lewis Field and Plum Brook Station sites.

2.0 APPLICABILITY

This chapter is applicable to all civil servant (CS) and support service contractor (SSC) employees assigned to Glenn Research Center (GRC) sites, construction contractors, students, and visitors. SSCs, construction contractors, and visitors' employers are responsible for the health and safety of their employees. Employers with employees using respiratory protection equipment shall have a written Respiratory Protection Program, as required by OSHA, and shall ensure employees comply with all program requirements including medical clearance training, respirator fit tests, proper use and maintenance of respiratory protection equipment, and any other requirements as set forth in this Chapter.

3.0 BACKGROUND

GRC, as part of its effort to provide a safe and healthful work environment, is committed to protect all employees from exposure to harmful concentrations of hazardous or toxic fibers, dust, fumes, mists, vapors, gases, or oxygen-deficient atmospheres. Where effective engineering controls are not feasible or while they are being instituted, respiratory protection measures described herein shall be used to protect workers. The Respiratory Protection Program encompasses all aspects of respiratory protection, from the initial hazard assessment, where the need for a respirator is determined, to the program evaluation, where the effectiveness of the program is assessed. The flow chart in Appendix B provides an outline of the Respiratory Protection Program managed by the Safety and Health Division (SHeD) Respiratory Protection Program Lead.

4.0 POLICY

The Glenn Research Center's safety and occupational health programs are intended to maintain and protect the health and safety of our workers, as well as to promote employee wellness. This Chapter is based upon applicable laws and regulations, industry standards or other guidelines, as well as agency policy. The agency policy providing guidance for the selection and use of respiratory protection is NASA Procedural Requirement (NPR) 1800.1C, wherein it states that NASA Centers shall comply with OSHA standards promulgated under Section 6 of the OSHA Act of 1970. In addition to complying with the OSHA Respiratory Protection Standard for General Industry (29 CFR 1910.134) and the OSHA Respiratory Protection Standard for Construction (29 1926.103), the following entities provide current guidance such as consensus and industry standards.

- American Conference of Governmental Industrial Hygienists (ACGIH)
- American National Standard Institute (ANSI)
- National Institute for Occupational Safety and Health (NIOSH)

It is NASA's policy to adhere to OSHA or ACGIH occupational exposure limits (OELs), whichever is more protective, to ensure worker protection. Given the inherent unknowns common to research operations, in the absence of an established OEL, the most protective approach shall be employed. The SHeD industrial hygienists (IHs) provide technical support in determining OELs to ensure worker protection.

5.0 RESPONSIBILITIES

5.1 SHeD Respiratory Protection Program Lead

The NASA GRC Respiratory Protection Program is implemented with the support of multiple personnel. The OSHA Respiratory Protection Program Administrator SHeD IHs support hazard and exposure assessments, Singleton/Medical Services provides medical clearance exams, NASA/SHeD Specialists provide technical support. Expertise for SCBA tasks is procured on an as-needed basis.

The Respiratory Protection Program Lead shall:

- Develop and implement a written Respiratory Protection Program to govern the selection and use of respiratory protective devices
- Conduct or facilitate baseline hazard assessments of operations, tasks, or procedures that possess the potential to create harmful airborne contaminants or oxygen-deficient atmospheres to determine specific respiratory protection needs
- Provide GRC Medical Services with an employee-specific respirator selection and use information to support medical clearance decision making
- Provide initial respiratory protection training and facilitate annual refresher training.
- Provide the Human Capital Development Division (HCDD) with the course content for the respiratory protection training classes offered and the delivery dates for each fiscal year; forward attendance forms to the HCDD for System for Administration, Training and Educational Resources for NASA (SATERN) recordkeeping of employee training history; provide a list of employees assigned the SATERN curriculum for Respiratory Protection.
- Provide employees and supervisors with a respirator selection and cartridge change schedule (RSCCS) to document the respiratory protective equipment selected for the respiratory hazard(s), and to provide a cartridge change schedule to protect against gases and vapors
- Facilitate the performance of personal exposure assessments representative of the exposures of employees in similar exposure groups
- Facilitate self-contained breathing apparatus (SCBA) inspection and maintenance tasks to ensure program compliance
- Respond to requests for voluntary use of disposable filtering facepiece respirators (dust masks) to assess the hazard and ensure compliance with Appendix C of the written respiratory protection program

5.2 SHeD Environmental Protection or Occupational Health Specialists

The SHeD Specialists shall

- Provide annual respirator fit testing, including a hands-on training component
- Maintain an annual documentation file for each employee including the fit test results, training quiz, the hazard assessment, and the RSCCS
- Issue the completed RSCCS to each employee and their supervisor
- Maintain the Respiratory Protection Program database to track program enrollment status, training, fit testing and medical clearance dates, hazard assessment data, and respiratory protection equipment selection
- Provide employees, and supervisors as needed, with reminders to ensure compliance with annual training, fit testing, and medical clearance requirements
- Assist the Respiratory Protection Program Lead with SCBA inspection and maintenance tasks to ensure program compliance, including SCBA inventory, SCBA annual bench testing, SCBA breathing air cylinder requalification, SCBA hands-on training, and the annual purge and refilling of all SCBA breathing air cylinders

- Facilitate and maintain a permanent record of SCBA breathing air cylinder recharging by the Brook Park Fire Chief, as requested by research users
- Assist SHeD IHs with personal exposure assessment sampling
- Perform annual program evaluations of CSs in the program to ensure continued program compliance and effectiveness
- Perform periodic audits of the onsite SSC respiratory protection programs for compliance and effectiveness

5.3 Supervisor of Respirator User

Supervisors shall

- Ensure a hazard analysis and/or assessment, job hazard analysis (JHA), or a Chemical Hygiene Plan standard operating procedure (SOP) has been developed for each task in their area requiring respiratory protection, whichever is most appropriate
- Ensure SHeD IH, has reviewed the operation or task to ensure the hazard assessment, JHA, or Chemical Hygiene Plan SOP has captured all of the elements of the tasks and the associated hazards, prior to the use of the material
- Ensure that employees are knowledgeable about the hazards posed, the safe work practices required, and the prescribed PPE, including respiratory protective devices, required for areas in which they work and for the tasks they perform
- Ensure areas, where the use of hazardous chemicals requires respiratory protection, are properly ventilated, properly marked, and access is restricted
- Be aware of the proper use and limitations of respiratory protection devices by completing a respirator training class or similar awareness training
- Enforce the requirements of the Respiratory Protection Program in their area, including employee compliance with training, medical clearance, fit testing, and where required, adherence to the respirator cartridge change schedule

5.4 Respirator Users

Those using respiratory protection shall

- Support their supervisor in ensuring a hazard assessment, JHA, or SOP has been conducted of their operation or task, potentially requiring a respirator, prior to the use of the potentially hazardous material(s)
- Notify their supervisors of any operational changes or new uses of the materials requiring respiratory protection
- Coordinate with the SHeD IH for an exposure assessment, prior to the performance of the task requiring the use of a respirator; where possible, the respirator user shall provide the SHeD IH with advance notification of respirator use (ideally 1 week), so that the appropriate sampling media and scheduling can be arranged
- Comply with the RSCCS provided by the Respiratory Protection Program Lead for each task requiring a respirator
- Comply with all aspects of the respirator program, including but not limited to, annual respirator fit testing, annual respirator training, annual medical evaluation, proper use, cleaning, maintenance, and storage
- Ensure proper respirator fit by performing a user seal check before entering into a hazardous environment
- Notify Medical Services and their supervisor if they experience any signs or symptoms of overexposure

5.5 Medical Director, Occupational Medicine Services

The Medical Director shall

- Provide medical evaluations of personnel identified by their organizations as respirator users, in conformance with protocols established by OSHA, NASA, and where required, other nationally recognized standards, as applicable
- Provide a written opinion, to the Respiratory Protection Program Lead, stating the employee is medically able to use the respirator, or any limitations on respirator use related to a medical condition, or related workplace conditions in which the respirator will be used, and the need for any follow-up evaluations (In addition, they shall maintain records of all occupational medicine activities associated with the support of the GRC Respiratory Protection Program.)
- Provide employee access to medical records in accordance with 29 CFR 1910.1020

5.6 Human Capital Development Division Chief

The HCDD shall

- Maintain SATERN records for employees who have completed respiratory protection training
- Coordinate with the Respiratory Protection Program Lead to ensure the SATERN Respiratory Protection Training curriculum is current and activated to issue annual training reminders for CS employees active in the Respirator Program

5.7 Safety and Health Division Chief

The Chief of SHeD shall ensure a qualified individual is identified as the OSHA Respiratory Protection Program Administrator, to carry out the responsibilities as set forth in the GRC Respiratory Protection Program. The qualified individual shall be identified by the organization tasked with the implementation of the Respiratory Protection Program. The Chief of SHeD shall provide support to the Respiratory Protection Program Lead in the performance of their duties and shall maintain Respiratory Protection Program records and documentation provided by the Respiratory Protection Program Lead.

6.0 REQUIREMENTS

6.1 Hazard Assessment (*OSHA* 29 CFR 1910.132*(d) and 29 CFR 1910.134(d)*)

The selection of any PPE including respirators is based on an assessment of the hazards. Guidance for this process is covered in the Glenn Safety Manual (GSM), Chapter 33, Job Hazard Analysis. Respiratory hazards may exist in the workplace in the form of dust, fibers, nanoparticles, fumes, mists, gases, vapors, and biological materials.

During the hazard assessment, several factors must be investigated including

- The nature of the task being performed and the potential for generation of airborne contaminants
- The physical, chemical, and toxic properties of the material
- The contaminant concentration and duration of exposure
- The environmental factors (heat and humidity)
- Worker exertion level while performing the task
- The potential for engineering and administrative controls
- Additional PPE needed

If an inhalation hazard is identified based on information from the hazard assessment, the SHeD IH will recommend the use of controls. Engineering and administrative controls, such as ventilation, chemical substitution, and limiting or restricting personnel access to areas, will be used whenever feasible and practical. When engineering controls are not feasible and practical, or do not completely eliminate the hazard, respiratory protection will be used. For tasks that are of short duration, infrequent or non-routine, respiratory protection can be used.

To meet the hazard assessment requirement, respirator users shall complete the following documentation:

- Job Hazard Analysis for the task requiring a respirator, as detailed in the GSM Chapter 33

- Respiratory Protection Hazard Assessment form completed and reviewed during each respirator training session and during each respirator fit test.

6.1 – The SHeD verification procedure to ensure compliance with the requirements listed in this section shall be a review of the employee's Respiratory Protection Hazard Assessment Form, which is kept in the employee's respiratory protection file.
Verification of the completion of a JHA is covered in the GSM, Chapter 33.

6.2 Exposure Assessment (*OSHA 29 CFR 1910.134(d)*)

For the selection of respiratory protection, the employer is required to assess the employee's actual inhalation exposure to the worksite hazard(s). The exposure assessment is done in the workplace, by way of air sampling, modeling, or some other means, to determine what airborne hazards are present, what the concentration is, and what level of respiratory protection is needed. Exposure assessment data provides the basis for the respirator users written RSCCS, incorporating OSHA assigned protection factors (APFs) and maximum use concentration (MUC) requirements, and respirator manufacturer's canister and cartridge service life specifications.

If there is more than one employee in an area performing the same task requiring respiratory protection, one exposure assessment can be performed for all employees performing that task. These are referred to as exposure assessments for similar exposure groups.

It is the responsibility of the respirator user to notify the SHeD IH, as appropriate, when they are going to perform the task requiring the use of a respirator. This notification shall give the SHeD IH as much notice as possible (ideally 1 week) so the appropriate sampling media and scheduling can be arranged.

6.2 – The SHeD verification procedure to ensure compliance with the requirements listed in this section shall be a review of the exposure assessment data referenced on the employees' RSCCS, which is kept in the employee's respiratory protection file. Copies of all respiratory protection exposure assessment data are kept on the SHeD server

6.3 Selection of Respirators (*OSHA 29 CFR 1910.134(d)*)

6.3.1 General Requirements

For each employee, the Respiratory Protection Program Lead shall choose either an air-purifying respirator or an atmosphere-supplying respirator for the airborne hazard based upon the JHA and, where possible, exposure assessment data. Proper selection of respirators shall be made according to the OSHA Respiratory Protection Standard, 29 CFR 1910.134. Only National Institute for Occupational Safety and Health (NIOSH) certified respirators shall be used in accordance with the conditions of certification.

When a negative pressure respirator has been selected for an employee, and the physician or other licensed health care professional (PLHCP) finds a medical condition that may place the employee's health at risk, a powered-air purifying respirator (PAPR), which provides a positive pressure in the facepiece, shall be provided by the employer, subject to the approval of the PLHCP. Employees may choose to use a PAPR in lieu of a negative pressure respirator; however, the use of a PAPR is subject to the approval of the Respiratory Protection Program Lead and the employee's supervisor.

6.3.2 Air-Purifying Respirators for Non-Immediately Dangerous to Life or Health Atmospheres (*OSHA 29 CFR 1910.134(d)(3)*)

Air-purifying respirators (APR) function by removing contaminants from the ambient air by passing the air, which is moved by the user's breathing action or by a blower, through an air-purifying filter, cartridge, or canister. The respirator filters, cartridges, or canisters contain a particulate filter or an adsorbent, or a combination of both, used to remove the airborne contaminates. The respirator selected shall maintain the employee's exposure to the hazardous substance, when measured outside the respirator, at or below MUC.

Respirator filters, cartridges or canisters have a limited service life, thus the respirator user shall be knowledgeable about "end-of-service-life" indicators, and shall be provided with a written RSCCS for each respiratory hazard

identified. The RSCCS enables the respirator user to easily identify the respirator and filtering devices required for the identified tasks, and specifies the change schedule for the selected filters, cartridges, or canister.

Full-facepiece respirators shall be used when there is potential for flying particles, liquid or chemical splashes, or a corrosive atmosphere.

Air-purifying respirators shall not be used in immediately dangerous to life and health (IDLH) atmospheres including oxygen-deficient atmospheres and unknown atmospheres.

6.3.1 & 6.3.2 – The SHeD verification procedure to ensure compliance with the requirements listed in these sections shall be a review of the employees RSCCS which is kept in the employee's respiratory protection program file and the employees Medical Records file kept by Medical Services.

6.3.3 Voluntary Use of Disposable Filtering Facepiece Respirators (*OSHA 29 CFR 1910.134, Appendix D*)

A disposable filtering facepiece respirator (also referred to as a dust mask or disposable respirator) may only be used on a voluntary basis for exposures to low concentrations of nuisance particulate matter and for protection against some types of biohazard agents such as mold. Use of filtering facepiece respirators requires the completion and submission of the form located in Appendix C of the written respiratory protection program, "Voluntary Use of Disposable Filtering Facepiece Respirators".

Requirements include a review of OSHA 29 CFR 1910.134, Appendix D, a review of an online manufacturer training video for the disposable filtering facepiece, and compliance with all other aspects of the Respiratory Protection Program, except for respirator medical evaluation and the respirator fit test.

For involuntary or required use of a filtering facepiece, compliance with all aspects of the Respiratory Protection Program, including medical evaluation and respirator fit testing, is required.

6.3.3 – The SHeD verification procedure to ensure compliance with the requirements listed in this section shall be a review of the employee's "Voluntary Use of Disposable Filtering Facepiece Respirators ", form located in the respiratory protection file "dust masks", and where applicable, the employee's respiratory protection program file. The form is found in Appendix C of the written RPP.

6.3.4 Atmosphere-Supplying Respirators for IDLH Atmospheres (*29 CFR 1910.134 (d)(2)*)

IDLH atmospheres, including oxygen-deficient atmospheres and unknown atmospheres, require the highest level of respiratory protection and reliability. Atmosphere-supplying respirators provide a continuous supply of compressed breathing air to the user. Employees entering IDLH atmospheres shall be provided with either 1) a full-facepiece pressure-demand SCBA, certified by NIOSH for a minimum service life of 30 min, or 2) a combination full-facepiece pressure-demand supplied-air respirator (SAR) with an escape auxiliary self-contained air supply.

For atmosphere-supplying respirators, a stationary source of compressed breathing air is delivered to the respirator user through a pressure-demand device. A pressure-demand device ensures a positive pressure inside the facepiece relative to ambient air, so that any leakage of air is outward rather than into the facepiece. More breathing air is introduced into the facepiece as a result of a pressure drop when the wearer takes a breath. Atmosphere-supplying respirators shall be of the pressure-demand, open-circuit type.

The advantages and disadvantages of using atmosphere-supplying respirators should be considered prior to selection for use. SCBAs have a limited service life of 30 to 60 min, depending on the size of the breathing air tank and the conditions of use. A SAR can be used for a longer duration than a SCBA, but the trailing airline may restrict the movement of the user and has the potential to come into contact with machinery or vehicles that could sever the line or restrict the flow of air.

Atmosphere-supplied respirators provided only for escape from IDLH atmospheres shall be NIOSH-certified for escape from the atmosphere in which they will be used. Currently, escape-only respirators are located in the PBS B–2 facility, the PBS Space Power Facility (SPF), and the PBS Hypersonic Test Facility (currently inactive)

6.3.4 – The SHeD verification procedure to ensure compliance with the requirements listed in this section shall be a review of employee's RSCCS and the SCBA equipment list, which identifies the type of equipment being used by

the employee.

6.4 Medical Evaluation (*29 CFR 1910.134 (c)(1)(ii) and Appendix C and NASA NPR 1800.1, Chapter 2.9*)

The use of respiratory protection places a physiological burden on the respirator user. A medical evaluation shall be performed for each employee required to use a respirator in the workplace to determine the employee's ability to wear the selected respiratory protection. The employee's medical evaluation shall be performed by a PLHCP prior to the initial fit test or use of a respirator and annually thereafter. Prior to the medical evaluation, the Respiratory Protection Program Lead shall provide the PLHCP information on the type and weight of the respirator selected, the duration and frequency of use, the expected physical workload, additional protective clothing to be worn, and any temperature and humidity extremes encountered. The PLHCP shall perform a medical evaluation that includes using a medical questionnaire that meets the requirements of 29 CFR 1910.134, Appendix C, and a review any other health or physical conditions that are pertinent. The PLHCP shall provide a written opinion to the employee and the Respiratory Protection Program Lead regarding the employee's physical ability to use a respirator and any limitation of use including the need for any follow-up evaluations.

When a negative pressure respirator has been selected for an employee and the PLHCP finds a medical condition that may place the employee's health at risk, a PAPR, which provides a positive pressure in the facepiece, shall be provided if the PLHCP determines that such a respirator can safely be used.

If respirator user experiences physical symptoms related to respirator use, they shall contact Medical Services immediately for a review of their medical status.

6.4 – The SHeD verification procedure to ensure compliance with the requirements listed in this section shall be a review of SHeD IH database shared with Medical Services, and the employees' medical file.

6.5 Training (*29 CFR 1910.134 (k)*)

Respiratory protection training is required for all employees who are required to use respirators, prior to the use of a respirator and annually thereafter. The training shall be comprehensive and understandable and recur annually or more often, if necessary. Respiratory protection training can consist of classroom instruction including a hands-on component or a combination of viewing training videos followed by an annual fit test that includes a hands-on review of critical information. Employees shall be able to demonstrate they understand

- Why the respirator is necessary and how improper fit, usage, or maintenance can compromise the protective effect of the respirator
- What the limitations and capabilities of the respirator are
- How to use the respirator effectively in emergency situations, including situations in which the respirator malfunctions
- How to inspect, put on and remove, use, and check the seals of the respirator
- What the procedures are for cleaning, maintenance, and storage of the respirator
- How to recognize medical signs and symptoms that may limit or prevent the effective use of respirators
- How to recognize filter and cartridge "end-of-service-life" indicators

Employees who use a filtering facepiece on a voluntary basis shall be provided with the basic advisory information required by 29 CFR1910.134, Appendix D, as well as completing Appendix C of the written respiratory protection program.

In addition to respirator training, hazard communication training is a component of the program, where employees are trained in the respiratory hazards to which they are potentially exposed during routine and emergency situations. Training about the respiratory hazards is specific to the task and hazard. SHeD offers training for the following:

- Hazard Communication Program
- Chemical Hygiene Plan
- OSHA-regulated materials training
- Silica awareness
- Nanomaterials
- Lunar dust and/or simulants awareness
- Asbestos, lead, and mercury awareness
- Hexavalent chromium awareness

Also, supervisors provide on-the-job training where a Material Safety Data Sheet (MSDS) is reviewed and the hazards discussed.

6.5 – The SHeD verification procedure to ensure compliance with the requirements listed in this section shall be a review of the respiratory protection training records kept by the HCDD, the employee's respiratory protection program file, and the annual respirator program evaluation file.

6.6 Fit Testing (*OSHA 29 CFR 1910.134 (f) and Appendix A*)

All employees using a tight-fitting facepiece respirator shall pass an appropriate quantitative fit test (QNFT) or qualitative fit test (QLFT). The QNFT is the preferred method of testing a proper facepiece fit and is required for SCBA and full-facepiece pressure-demand SAR.

The Respiratory Protection Program Lead shall select the appropriate type of respirator for each employee, utilizing hazard assessment and exposure assessment data specific to the task. The employee shall then be able to choose their respirator from a sufficient number of respirator models and sizes so that the respirator is acceptable to and correctly fits the employee.

The employee shall be fit tested by a SHeD Specialist, after the initial medical clearance but prior to the first use of the respirator and annually thereafter. Additional fit tests shall be conducted when there are changes in an employee's physical condition that could affect respirator fit.

The effectiveness of a tight-fitting respirator is dependent on an airtight seal between the respirator and the user's face. Thus, an employee will not be fit tested if facial hair comes between the user's face and the respirator facepiece seal. Spectacles, goggles, face shields, or welding helmets shall also be worn so as to not interfere with the seal. Prior to being fit tested, employees shall demonstrate the ability to perform a user seal check by conducting a negative and positive pressure test. Upon completion of the fit test, each employee will be issued a certification card, which identifies the employee, the type of respirator fit tested, and the fit test expiration date.

Upon completing the fit test and compliance with annual training and medical clearance requirements, respirator users will be issued a RSCCS that provides ordering information for their respirator, the appropriate filters and cartridges, and the cartridge change schedule to protect against gases and vapors.

6.6 - The SHeD verification procedure to ensure compliance with the requirements listed in this section shall be a review of the annual fit test record and the RSCCS in the employee's respiratory protection program file.

6.7 Use of Respirators (*OSHA 29 CFR 1910.134 (g) and Appendix B–1*)

6.7.1 General

Requirements are established for the use of respirators: to prohibit conditions that may result in facepiece seal leakage; to prevent employees from using respirators in hazardous environments; to ensure continued effective respirator operation throughout the work shift; and to establish procedures for the use of respirators in IDLH atmospheres.

The effectiveness of a tight-fitting respirator is dependent on an airtight seal between the respirator and the user's face, and properly functioning valves. Facial hair that comes between the sealing surface of the facepiece and the face or that interferes with valve function is not permitted. Spectacles, goggles, face shields, or welding helmets shall be worn so as not to interfere with the seal. Employees who wear spectacles (glasses) and are required to use a full-facepiece respirator shall be issued a respirator spectacle kit with prescription lenses from Medical Services.

For all tight-fitting respirators, a user seal check, as mandated by OSHA 29 CFR 1910.134 Appendix B-1, shall be performed to ensure an adequate face-to-facepiece seal. Respirator users shall perform a user seal check by conducting the negative and positive pressure test each time the respirator is worn.

Air-purifying respirators can only be worn in environments with sufficient oxygen and known contaminants. The Respiratory Protection Program Lead shall develop a respirator cartridge change schedule for each task, using information from the hazard assessment, exposure assessment, and cartridge manufacturer. The cartridge change schedule determines when the respirator user must replace the filters or cartridges. The respirator user is responsible maintaining compliance with the cartridge change schedule. Organic vapors can migrate through the respirator cartridge carbon bed without airflow; thus, the use of organic vapor cartridges is limited to one shift.

Respirator users shall be permitted to leave the work area when they need to wash their faces and respirator facepiece to prevent eye or skin irritation, if they detect vapor or gas breakthrough, if they experience changes in breathing resistance or leakage of the facepiece, and/or they need to change the filter, cartridge, or canister elements as specified in the RSCCS. Reentry into hazardous atmosphere shall not be undertaken until the respirator is replaced or repaired. If employees experience physical symptoms, they shall immediately leave the area and report to Medical Services and notify their supervisor.

Respirator users shall not wear respirators in the presence of hazardous atmospheres other than those identified in the respirator user's RSCCS.

6.7.2 Use of Respirators in IDLH Atmospheres (*OSHA 29 CFR 1910.134 (g)*)

Only full-facepiece pressure-demand SCBA certified by NIOSH for a minimum service life of 30 min or a combination full-facepiece pressure-demand SAR with an auxiliary self-contained air supply may be used in IDLH atmospheres including oxygen-deficient and unknown atmospheres.

One employee or when needed, more than one employee, shall be located outside the IDLH atmosphere. Visual, voice, or signal line communication shall be maintained between the employee in the IDLH atmosphere and the employees located outside the IDLH atmospheres.

The employee(s) located outside the IDLH atmosphere shall be trained and equipped with an atmosphere-supplied respirator and retrieval equipment to provide effective emergency rescue; shall call 911, GRC Dispatch, before they enter the IDLH atmosphere to provide emergency rescue; and shall provide the necessary assistance appropriate to the situation.

6.7 - The SHeD verification procedure to ensure compliance with the requirements listed in this section shall be a review of the annual program evaluation records, the research SOP's for research tasks requiring the use of SCBA's, and the SCBA maintenance records.

6.8 Care and Maintenance of Respirators (*OSHA 29 CFR 1910.134 (h) and Appendix B–2*)

Respirator users are responsible for the cleaning, disinfection, inspection, and maintenance of their personal respirators. Respirator users needing support for respirator care and maintenance should contact the Respiratory Protection Program Lead or the SHeD specialists. Cleaning, Disinfection, and Storage of Respirators

Respirators shall be cleaned and disinfected as often as necessary to be maintained in a sanitary condition, in a manner that prevents damage to the respirator and does not cause harm to the user. OSHA 29 CFR 1910.134, Appendix B–2, Respirator Cleaning Procedures, shall be followed or procedures recommended by the manufacturer, where equivalently effective. If the respirator is used periodically throughout the day, at a minimum, it must be cleaned at the end of the day or shift. Individually wrapped cleaning towelettes issued by NASA stock may be used, but they must be supplemental to OSHA or manufacturer respirator cleaning procedures.

Respirators shall be stored to protect them from damage, contamination, dust, sunlight, extreme temperatures, excessive moisture, and damaging chemicals, and they shall be stored to prevent deformation of the facepiece and the inhalation and exhalation valves.

6.8.1 Respirator Inspections

Respirators used in routine situations shall be inspected by the user before each use and during cleaning. Respirator inspections shall include a check of respirator function, tightness of connections, and the condition of the various parts, including but not limited to, the facepiece, head straps, valves, connecting tube, cartridges, canisters, or filters. The inspection shall also include a check of the elastomeric parts for pliability and signs of deterioration. Defective respirators shall be turned into SHeD for repair or replacement.

6.8.2 Additional Care and Maintenance for Atmosphere-Supplying Respirators (*NFPA 1852, CGA 7.1, and DOT 49 CFR Part 178*)

SCBA used for research, and not maintained for emergency use, shall be inspected before and after each use. SCBA used for emergency use shall be inspected before and after each use and monthly. The external surface of the SCBA and the facepiece components shall be cleaned, disinfected, and stored after each use according to the manufacturer's instructions. The SCBA inspections shall be performed by the respirator users to assure continuing familiarity with the respirator and shall include a determination that the regulator and warning devices are functioning properly.

If defects are found during an inspection, they shall be brought to the attention of the Respiratory Protection Program Lead. The defective SCBA shall be marked "Danger—Defective SCBA—Do Not Use" and returned to Respiratory Protection Program Lead for immediate repair. The Respiratory Protection Program Lead shall ensure that all repairs shall be performed by the manufacturer or personnel trained by the manufacturer of the equipment and shall maintain a detailed record of all repairs conducted on these systems.

SCBA shall be tested at least annually on a breathing machine, or SCBA "bench tested." The testing shall meet the requirements specified in National Fire Protection Association (NFPA) 1852 (2008). The Respiratory Protection Program Lead shall facilitate the SCBA annual breathing machine testing (bench testing).

SCBA breathing air cylinders shall be maintained in a fully charged state and shall be recharged when the pressure falls to 90 percent of the manufacturer's specified pressure level. The SHeD Specialist shall facilitate the recharging of the SCBA breathing air cylinders upon request; currently, the SHeD Specialist transports SCBA cylinders to the City of Brook Park Fire Station for recharging with Grade E breathing air. Compressed breathing air stored in SCBA breathing air cylinders shall be replaced at least annually. The SHeD Specialists shall maintain a permanent record of cylinder recharging.

Compressed breathing air used for respiration shall meet at least the requirements for Grade D breathing air as described in American National Standards Institute (ANSI)/Compressed Gas Association Commodity Specification for Air, Compressed Gas Association (CGA) G7.1–1989. Breathing air cylinders shall meet the following requirements: the cylinders shall be hydrostatically tested by a licensed cylinder retester in accordance with the appropriate Department of Transportation (DOT) regulation and cylinders of purchased air shall have a certificate of analysis from the supplier for a minimum of Grade D breathing air.

The Respiratory Protection Program Lead shall facilitate the periodic SCBA cylinder requalification, including hydrostatic testing, according to DOT specifications. The retest facility shall be a qualified DOT Research and Special Programs Administration retest facility with a valid retester identification number. Generally, composite cylinders are requalified every 5 years and all-metal cylinders are requalified every 5 years. Composite cylinders have a service life of 15 years and the service life of all-metal cylinders is determined at the time of requalification. Requalified cylinders are marked with the retester identification number and the retest date.

Compressors used to supply compressed breathing air shall be constructed and situated so as to prevent entry of contaminated air in the air-supply stream and minimize moisture content. Compressors used to supply breathing air shall be in compliance with 29 CFR 1910.134(i) specifications.

NASA GRC at Lewis Field and PBS does not have any personnel approved for the emergency-use respirators. Emergency response is provided for GRC by the City of Brook Park and for PBS by Perkins Township.

6.8.3 Emergency Escape-Only Respirators (*OSHA 29 CFR 1910.134(c)(1)(iv)*)

Emergency escape-only respirators shall be inspected before being place in the workplace, and in accordance with the manufacturer's recommendations. Emergency escape-only respirators must be clearly marked and stored where they are always accessible. Currently, escape-only respirators are located in the PBS B–2, and PBS SPF facilities.

6.8 - The SHeD verification procedure to ensure compliance with the requirements listed in this section shall be a review of the annual program evaluation records and the SCBA maintenance records.

6.9 Program Evaluation (*OSHA 29 CFR 1910.134(l)*)

Respirator program evaluations of the workplace shall be conducted annually by the SHeD Specialists and the results shall be reviewed by the Respiratory Protection Program Lead. The purpose of the program evaluation is to ensure that the written program is being properly implemented; to consult with employees to ensure that they are using their respirators properly; and to ensure the program continues to be effective. The evaluation shall be conducted in the workplace, and can include but not be limited to, respirator fit, appropriate respirator selected for the hazard, proper use in the workplace, and proper maintenance. The Respiratory Protection Program Lead shall correct any problems identified during the program evaluation.

SSCs shall conduct program evaluations of their respiratory protection program at a frequency that ensures that all elements of the OSHA Respiratory Protection Standard are being effectively implemented. SHeD shall perform periodic audits of the onsite SSC respiratory protection programs for compliance and effectiveness.

6.9 - The SHeD verification procedure to ensure compliance with the requirements listed in this section shall be a review of the annual program evaluation records.

6.10 Compliance

Respirator users who fail to comply with respirator program requirements will be referred to their supervisors, and may be removed from the program or may receive a corrective and preventive action report if compliance with all requirements is not met.

7.0 RECORDS

- Job hazard analyses.—Maintained as detailed in Glenn Safety Manual (GSM), Chapter 33, Job Hazard Analysis
- Respiratory Protection Program Hazard Assessments.—Maintained in employee's respirator program file.
- Exposure assessments.—Maintained on the SHeD server, IH Exposure Assessments file and in Medgate.
- RSCCS.—Maintained on SHeD server, IH Respirator Program and in employee's respirator program file.
- Voluntary Use of Disposable Filtering Facepiece Respirators (dust masks).—Maintained in respirator program files.
- Medical evaluations.—Maintained by Medical Services and kept for the duration of an employee's employment plus 30 years.
- Respiratory Protection Training Records.—Maintained in SATERN by HCDD
- Respirator Fit Test records—Maintained in employee's respirator program file, until the next fit test.
- SCBA Equipment List.—Maintained on SHeD server, IH Respirator Program.
- SCBA cylinder requalification certifications.—Maintained in the respirator program files, kept for the life of the cylinder.
- SCBA breathing machine test (bench test) certifications.—Maintained in the respirator program files, kept until the next bench test is completed.
- Annual Respirator Program Evaluation Records.—Maintained in respirator program files and on SHeD server

8.0 REFERENCES

Document Number	Document Name
29 CFR 1910.134	Occupational Safety and Health Administration (OSHA) Respiratory Protection Standard
ACGIH	American Conference of Governmental Industrial Hygienists, Threshold Limit Values (TLV®) -Occupational Exposure Guidelines for Chemical Substances and Physical Agents, and Biological Exposure Indices (BEIs®) for chemical substances.
NPR 1800.1	NASA Occupational Health Program Procedures
29 CFR 1910.1020	OSHA Access to Employee Exposure and Medical Records
29 CFR 1910.1001 to 1045	Chemical Specific Regulations, U.S. Department of Labor, Occupational Safety and Health
NFPA 1852	National Fire Protection Association, Standard on Selection, Care, and Maintenance of Open-Circuit SCBA, 2008 edition (available from SHeD)
ANSI/CGA G 7.1	American National Standards Institute (ANSI)/Compressed Gas Association Commodity Specification for Air, 2004 edition
NASA GRC C–82	NASA GRC Job Hazard Analysis Form
OSHA 3352–02	Assigned Protection Factors for the Revised Respiratory Protection Standard, 2009 edition
OSHA Small Entity	Small Entity Compliance Guide for the Revised Respiratory Protection Standard, 2011 edition
42 CFR Part 84	National Institute for Occupational Safety and Health, Respiratory Protection Devices
ANSI/AIHA Z88.6	American National Standard Institute (ANSI)/American Industrial Hygiene Association (AIHA), Respiratory Protection—Physical Qualifications for Personnel, 2006 edition (available from SHeD)
ANSI/AIHA Z88.10	American National Standard Institute (ANSI)/American Industrial Hygiene Association (AIHA), Respirator Fit Test Methods, 2010 edition (available from SHeD)

APPENDIX A.—DEFINITIONS AND ACRONYMS

American Conference of Governmental Industrial Hygienists (ACGIH)

American Industrial Hygiene Association (AIHA)

Air-purifying respirator (APR).—Respirator with an air-purifying filter, cartridge, or canister that removes specific air contaminants by passing ambient air through the air-purifying element.

American National Standards Institute (ANSI)

Assigned Protection Factor (APF).—The workplace level of respiratory protection that a respirator or class of respirators is expected to provide.

Atmosphere-supplying respirator.—Respirator that supplies the respirator user with breathing air from a source independent of the ambient atmosphere, and includes supplied-air respirators and self-contained breathing apparatus units.

Canister or cartridge.—Container with a filter, sorbent, or catalyst, or combination of these items, which removes specific contaminants from the air passed through the container.

Compressed Gas Association (CGA)

Code of Federal Regulations (CFR)

Civil servant (CS)

Department of Transportation (DOT)

Emergency situation.—Any occurrence such as, but not limited to, equipment failure, rupture of containers, or failure of control equipment that may or does result in an uncontrolled significant release of an airborne contaminant.

Employee exposure.—Exposure to a concentration of an airborne contaminant that would occur if the employee were not using respiratory protection.

End-of-service-life indicator.—A system that warns the respirator user of the approach of the end of adequate respiratory protection, for example, that the sorbent is approaching saturation or is no longer effective.

Engineering controls.—Methods of controlling employee exposures to toxic materials by modifying the source or reducing the quantity of contaminants released into the workroom environment.

Escape-only respirator.—Respirator intended to be used only for emergency exit.

Filter or air purifying element.—Component used in respirators to remove solid or quid aerosols from the inspired air.

Filtering facepiece.—Negative pressure particulate respirator with a filter as an integral part of the facepiece or with the entire facepiece composed of the filtering medium (commonly known as a disposable dust mask or a N95 dust mask).

Fit test.—A protocol to qualitatively or quantitatively evaluate the fit of a respirator on an individual (see also qualitative fit test (QLFT) and quantitative fit test (QNFT)).

Glenn Research Center (GRC)

Glenn Safety Manual (GSM)

Hazard assessments.—Industrial hygiene evaluation of the health hazards posed by a specific operation or task.

Human Capital Development Division (HCDD)

High-efficiency particulate air (HEPA) filter.—A filter that is at least 99.97 percent efficient in removing monodisperse particles of 0.3 μm in diameter. The equivalent NIOSH 42 CFR 84 particulate filters are the N100, R100, and P100 filters.

Immediately dangerous to life or health (IDLH).—atmosphere that poses an immediate threat to life, would cause irreversible adverse health effects, or would impair an individual's ability to escape from a dangerous atmosphere.

Industrial hygienist (IH).—A professional tasked with the anticipation, recognition, evaluation, and control of health hazards in the workplace.

Job hazard analysis (JHA)

Material Safety Data Sheet (**MSDS)**

Maximum use concentration (MUC).—The maximum atmospheric concentration of a hazardous substance from which an employee can be expected to be protected when wearing a respirator and is determined by the assigned protection factor of the respirator or class of respirators and the exposure limit of the hazardous substance. The MUC can be determined mathematically by multiplying the assigned protection factor specified for a respirator by the required OSHA permissible exposure limit, short-term exposure limit, or ceiling limit. When no OSHA exposure limit is available for a hazardous substance, an employer must determine an MUC on the basis of relevant available information and informed professional judgment.

Medgate.—A software program implemented by NASA headquarters for NASA Centers to track and manage employee medical records and industrial hygiene workplace exposure data.

N95.—A NIOSH-approved particulate filtering facepiece respirator that filters at least 95 percent of airborne particles. The N95 is not resistant to oil.

Negative pressure respirator (tight fitting).—A respirator in which the air pressure inside the facepiece is negative during inhalation with respect to the ambient air pressure outside the respirator.

National Fire Protection Association (NFPA)

National Institute for Occupational Safety and Health (**NIOSH)**.—An agency of the Health and Human Services Department under the Centers for Disease Control (CDC).

NASA Procedural Requirement (NPR)

Occupational exposure limit (OEL).—The most stringent of

- the permissible exposure limit (PEL) for the hazardous chemical as listed in 29 CFR Part 1910, Subpart Z
- the threshold limit value (TLV) for the hazardous chemical assigned by the American Conference of Governmental Industrial Hygienists (ACGIH) in the latest edition of “Threshold Limit Values for Chemical Substances and Physical Agents in the Work Environment”
- a NASA PEL when published as a NASA Health standard
- where there is no PEL, TLV, or NASA standard for the chemical, an exposure level based on available published scientific information such as Material Safety Data Sheets

Occupational Safety and Health Administration (OSHA)

Oxygen-deficient atmosphere.—Atmosphere with oxygen content below 19.5 percent by volume.

Permissible exposure limit (PEL).—The occupational exposure limit established by OSHA; the permissible concentration in air of a substance to which nearly all workers may be repeatedly exposed 8 hours a day, 40 hours a week, for 30 years without adverse effects.

Personal protective equipment (PPE)

Physician or other licensed health care professional (PLHCP).—A physician or other licensed health care provider who must be legally permitted by his or her professional license to conduct the type of medical evaluation required by the respiratory standard.

Positive pressure respirator.—Respirator in which the pressure inside the respiratory inlet covering exceeds the ambient air pressure outside the respirator.

Powered air-purifying respirator (PAPR).—Air-purifying respirator that uses a blower to force the ambient air through air-purifying elements to the inlet covering.

Pressure-demand respirator.—Positive pressure atmosphere-supplying respirator that admits breathing air to the facepiece when the positive pressure is reduced inside the facepiece by inhalation.

Qualitative fit test (QLFT).—A pass/fail fit test to assess the adequacy of respirator fit that relies on the individual's response to the test agent. QLFT provides only a pass/fail result.

Quantitative fit test (QNFT).—An assessment of the adequacy of respirator fit by numerically measuring the amount of leakage into the respirator.

Respirator selection and cartridge change schedule (RSCCS).—A document issued to each respirator user by the Respiratory Protection Program Lead to provide the user with information on the respiratory protection devices selected, the cartridge change schedule, and the exposure assessment data used to determine the selections.

Supplied-air respirator (SAR)

System for Administration, Training and Educational Resources for NASA (SATERN)

Self-contained breathing apparatus (SCBA).—Atmosphere-supplying respirator for which the breathing air source is designed to be carried by the user.

Service life.—The period of time that a respirator, filter, sorbent, or other respiratory equipment provides adequate protection to the wearer.

Safety and Health Division (**SHeD)**

Standard operating procedure (SOP)

Space Power Facility (SPF)

Support service contractor (SSC)

Supplied-air respirator (SAR) or airline respirator.—An atmosphere-supplying respirator for which the source of breathing air is not designed to be carried by the user.

Threshold limit value (TLV).—Established by the American Conference of Governmental Industrial Hygienists (ACGIH) to designate degree of exposure to contaminants and expressed as parts of vapor or gas per million parts of air by volume at 25 °C and 760 mmHg pressure, as approximate milligrams of particles per cubic meter of air (mg/m^3) or as number of fibers per cubic centimeter of air (f/cc). An exposure level under which it is believed most people can work consistently for 8 hours a day, day after day, with no harmful effects.

Threshold limit value–time-weighted average (TLV–TWA).—The time-weighted average concentration for a normal 8-hr workday and a 40-hour workweek to which nearly all workers may be exposed repeatedly, day after day, without adverse effects.

Threshold limit value–ceiling (TLV–C).—The concentration of a contaminant that should not be exceeded at any time.

Threshold limit value–short-term exposure limit (TLV–STEL).—A 15-minute TWA exposure that is not to be exceeded at any time during a workday even if the 8-hour TWA is within the TLV–TWA. Exposures above the TLV–TWA up to the STEL should not be longer than 15 minutes must not occur more than four times per day, and there should be at least 60 minutes between successive exposures in this range.

Tight-fitting facepiece.—A respiratory inlet covering that forms a complete seal with the face.

Time-weighted average exposure.—Average concentration of an agent over a given working period of a person's exposure, as determined by sampling.

User seal check.—An action conducted by the respirator user each time a respirator is worn to determine if the respirator is properly seated to the face.

APPENDIX B.—RESPIRATORY PROTECTION PROGRAM (RPP) FLOWCHART

Appendix B
Respiratory Protection Program (RPP) Flowchart

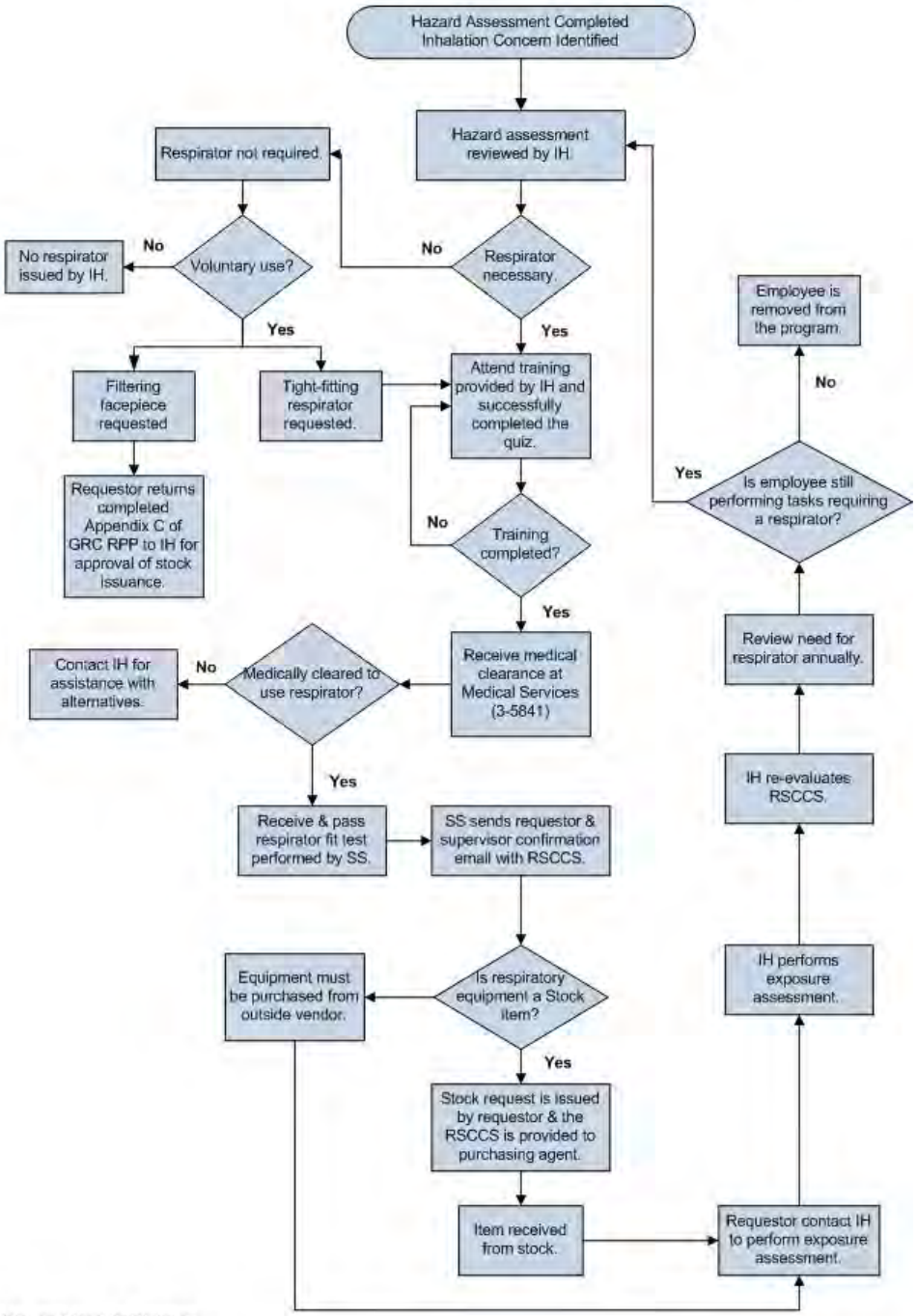

SHeD = Safety and Health Division
IH = SHeD Industrial Hygiene (3-2870)
SS = SHeD Specialist (3-6762)
RSSC = Respirator Selection & Cartridge Change Schedule form completed by IH.

APPENDIX C.—VOLUNTARY USE OF DISPOSABLE FILTERING FACEPIECE RESPIRATORS (DUST MASKS OR N95)

Use of a disposable filtering facepiece respirator (dust mask) at NASA GRC requires: 1) SHeD Industrial Hygiene hazard assessment and approval of the proposed use; 2) employee review of OSHA 29 CFR 1910.134, Appendix D; 3) employee review of a manufacturer training video or instruction manual for the selected dust mask; and 4) completion and return of this form to the SHeD Respirator Program Lead. A respirator fit test and a respirator medical evaluation are not required for the voluntary use of filtering facepiece respirators.

Note: Dust Masks or Filtering Facepiece Respirators may be used for nuisance particulate levels only

- Particulate levels must be below the action level (solid and non-oil-based particles).
- Not for paints, oils, an aerosol, gases, vapors, asbestos or sandblasting.
- Not for particulates smaller than 0.3 microns including ultrafine and nanoparticles.
- Examples for use: grinding, sanding, sweeping, bagging, dusty operations

STEP 1) Request a SHeD IH hazard assessment, Marne Bold, phone 433-2870.

STEP 2) Review OSHA 29 CFR 1910.134, Appendix D

OSHA 29 CFR 1910.134 Appendixes D:
Information for Employees Using Respirators When Not Required under the Standard (Mandatory)

"Respirators are an effective method of protection against designated hazards when properly selected and worn. Respirator use is encouraged, even when exposures are below the exposure limit, to provide an additional level of comfort and protection for workers. However, if a respirator is used improperly or not kept clean, the respirator itself can become a hazard to the worker. Sometimes, workers may wear respirators to avoid exposures to hazards, even if the amount of hazardous substance does not exceed the limits set by OSHA standards. If your employer provides respirators for your voluntary use, or if you provide your own respirator, you need to take certain precautions to be sure that the respirator itself does not present a hazard.

You should do the following:

1. *Read and heed all instructions provided by the manufacturer on use, maintenance, cleaning and care, and warnings regarding the respirators limitations.*

2. *Choose respirators certified for use to protect against the contaminant of concern. NIOSH, the National Institute for Occupational Safety and Health of the U.S. Department of Health and Human Services, certifies respirators. A label or statement of certification should appear on the respirator or respirator packaging. It will tell you what the respirator is designed for and how much it will protect you.*

3. *Do not wear your respirator into atmospheres containing contaminants for which your respirator is not designed to protect against. For example, a respirator designed to filter dust particles will not protect you against gases, vapors, or very small solid particles of fumes or smoke.*

4. *Keep track of your respirator so that you do not mistakenly use someone else's respirator."*

STEP 3) Complete Dust Mask Training

- Users of dust masks shall view the manufacturer training video or instruction manual for the selected filtering facepiece, as posted on the SHeD Website. The basic steps generally apply:
- Hold the mask with nosepiece at fingertips and the headbands hanging free.
    - Place mask firmly against face with nosepiece over the bridge of your nose.
    - Stretch top headband to the back of head above the ears then stretch bottom headband over head and position below ears. Adjust the respirator for a comfortable fit.
    - Conduct a positive pressure fit check by cupping hands over mask and exhale slightly. If air leaks around the edges try to reposition the mask for a better fit.
    - Change respirator mask if breathing becomes difficult or if mask becomes damaged or distorted.

(PAGE 1 of 2)

VOLUNTARY USE OF DISPOSABLE FILTERING FACEPIECE RESPIRATORS (DUST MASKS or N95)

First Name: _____ Last Name: _____ Phone: _____

Supervisor: _____

Area where dust mask will be used: Building: _____ Room/Area: _____

Circle the best choice any controls being used to minimize the respiratory concern:

Dust Suppression/General Room Exhaust/Local Exhaust - hood or snorkel/Enclosure/Wetting Agent/None

Job Task/Description (task that dust mask will be used):

Respiratory Contaminant(s) of concern: (Please be specific such as dust, mold)

Circle best choice for frequency of use:

Daily (250/year)/Weekly (50/year)/Monthly (12/year)/Rarely (<6 days/year)

Circle the best choice for how many hours it will be used each time it is worn:

Less than 1 hour/1 hour/2 hours/3 hours/4 hours/5 hours/6 hours/7 hours/more than 7 hours

Additional Comments:

_____

STEP 4) Complete form and return to Marne Bold, via email, interoffice mail, or fax.

I have read and understand information provided in Appendix C of the RPP and have viewed the manufacturer's training video or manufacturer's instructions for the filtering facepiece. By completing and signing this document, I agree to comply with the requirements of Voluntary Use of Disposable Filtering Facepiece Respirators and the Glenn Respiratory Protection Program, Occupational Health Programs Manual, Chapter 4.

Employee Name(s) (legible) and Signature(s)_____

_____

Supervisor Name and Signature_____

Date _____ SHeD Respirator Program Lead _____

(Page 2 of 2)

Contents

1.0 PURPOSE....2
2.0 APPLICABILITY....2
3.0 BACKGROUND....2
4.0 POLICY....2
5.0 RESPONSIBILITIES....3
5.1 Senior Industrial Hygienist 3
5.2 Medical Director, Occupational Medicine Services....3
5.3 Facilities Division Project Managers....3
5.4 Contracting Officer's Technical Representative (COTR)....4
5.5 Support Service Contractors....4
5.6 Research Personnel....4
5.7 Supervisors....4
5.8 Employees....4
6.0 REQUIREMENTS *(OSHA 29 CFR 1926.62 and OSHA 29 CFR 1910.1025)*....4
6.1 The following regulations apply, as per OSHA 29 CFR 1926.62 and OSHA 29 CFR 1910.1025....4
6.1.1 Exposure limits....4
6.1.2 Exposure assessment....5
6.1.3 Monitoring frequency....5
6.1.4 Presumed exposure....5
6.1.5 Personal protective equipment....5
6.1.6 Housekeeping....5
6.1.7 Hygiene facilities....5
6.1.8 Hygiene practices....5
6.1.9 Administrative controls....6
6.1.10 Medical surveillance....6
6.1.11 Signs....6
6.1.12 Disposal....6
6.1.13 Training....6
6.1.14 Recordkeeping....7
6.2 Welding, Grinding, and Cutting....7
7.0 RECORDS....8
8.0 REFERENCES....8
APPENDIX A.—Definitions and Acronyms....9
APPENDIX B.—Recommended Clearance Criteria Guidelines After Lead Abatement....11

Chapter 5—LEAD

Note: *The current version of this chapter is maintained and approved by the Safety and Health Division (SHeD). The last revision date for this chapter was May 2012. If you are referencing paper copies, please verify that it is the most current version before use. The current version is available on the Glenn Research Center intranet at http://smad-ext.grc.nasa.gov/shed/pub/ohpm/ohpm-manual.pdf.*
Approved by Chief of Safety and Health Division.

1.0 PURPOSE

This chapter establishes minimum requirements for handling, use, removal, and disposal of all lead-containing materials at the NASA Glenn Research Center (GRC).

2.0 APPLICABILITY

This chapter is applicable to all personnel at GRC Lewis Field and Plum Brook Station (PBS) including, but not limited to, civil servants, students, and contractor personnel. Construction contract personnel shall comply with the contents of this program. Onsite support service contractors and construction contractors are responsible for developing and implementing their own lead compliance programs in accordance with OSHA and NASA requirements.

3.0 BACKGROUND

Lead exposure is one of the oldest known occupational hazards. It is harmful when inhaled or ingested, and the absorption of large amounts of lead causes diseases of the kidneys as well as peripheral and central nervous system damage. The effects of lead on the nervous system range from mild behavioral changes to fatal brain damage. Lead exposure can also result in impotence and sterility in men and decreased fertility in women. Without proper workplace hygiene practices, the lead taken home on workers' clothing may expose their families. There have been instances of lead poisoning among children whose parents work in a high-lead environment.

Employees at GRC may be exposed to lead through construction and maintenance activities that disturb lead-based paints (LBPs) or other lead-containing materials. Exposures may also occur where lead-containing products are used, including soldering and brazing operations and certain research operations. Airborne lead exposures are not a problem during soldering operations when the temperature remains below 450 °C (840 °F)Good housekeeping and personal hygiene practices are required in these operations to minimize the ingestion of lead. Local exhaust ventilation may be needed to control exposure to other contaminants generated by these operations and to minimize lead exposures during grinding and polishing operations. Since extremely high exposures to lead occur during welding, cutting, and brazing of materials with LBPs and abrasive blasting or grinding of these materials, controls shall be used to protect workers and prevent lead contamination of the workarea.

Strict occupational and environmental regulations govern the use, handling, and disposal of lead-containing materials. The Occupational Safety and Health Administration (OSHA) occupational airborne exposure limit is 50 $\mu g/m^3$ of air as an 8-hr time-weighted average (TWA). At the action level (AL) of 30 $\mu g/m^3$, a lead compliance plan, employee training, exposure monitoring, and medical monitoring are required.

Environmental regulations require controlling and permitting releases of lead to the air and water, testing of lead-containing materials before disposal, and proper disposal of any lead-containing materials meeting the definition of hazardous waste.

4.0 POLICY

It is the policy of GRC to comply with all applicable regulations regarding lead and to prevent illness to workers and damage to the environment from the use, removal, and disposal of lead. To accomplish this, all personnel shall comply with the requirements of this chapter.

Many paints contain trace contaminants of other heavy metals other than lead. These other heavy metals may have more restrictive clean-up levels than lead. Because of this fact, it is GRC policy that no painted surface will be grinded, welded, or abraded without first removing the paint.

Lead-related work in construction and maintenance activities ranges from large lead remediation projects to small maintenance operations. In all cases, lead-related operations shall be done within a controlled area using engineering and work practice controls that minimize worker exposure and limit contamination of surrounding areas. The area will be posted with signs meeting OSHA requirements to restrict access to workers with the required PPE.

Regulations governing worker protection shall be strictly followed, including requirements for

- A competent person, defined by OSHA as someone capable of identifying existing and potential lead hazards in the surroundings or working conditions, who has authority to take prompt corrective measures
- A written lead compliance program that describes each lead activity, the engineering, work practice, and administrative controls, the air monitoring to procedures, and inspection schedules

5.0 RESPONSIBILITIES

It is the responsibility of all civil servants, researchers, construction contractors and support service contractors to ensure that LBP is removed or handled only by properly trained and licensed personnel.

5.1 SHeD

SHeD provides guidance on the requirements of Federal, state, and local occupational health regulations. Specific responsibilities are listed below.

- Maintains the Lead Compliance Program for civil servant operations
- Develops and manages the Lead Compliance Program according to OSHA 29 Code of Federal Regulations (CFR) 1926.62 and 1910.1025
- Evaluates civil servant employee exposures, recommends procedures to minimize exposures, and recommends employees for inclusion in a medical surveillance program
- Provides sampling and analysis support to identify lead and lead-containing materials
- Provides guidance on the requirements of Federal, state, and local environmental regulations on any air, water, or soil pollution issues
- Reviews all contractor health and safety plans and hot work permits for issues associated with lead

5.2 Medical Director, Occupational Medicine Services

- Maintains medical surveillance programs for civil servant and contractor employees exposed to hazardous chemicals that require medical monitoring
- Maintains complete, accurate records of all medical examinations for personnel in the medical surveillance program (Records are to be retained for at least 30 years. Results of examinations are to be discussed with employees as needed.)
- Notifies employees of medical surveillance results
- Notifies SHeD about employees who may require an exposure evaluation, based on clinical findings

5.3 Facilities Division Project Managers

- Identify lead-containing materials and materials that may be disturbed in any renovation or maintenance activities
- Ensure that bid specifications identify lead that may be disturbed in any renovation or maintenance activities and include requirements that the contractor comply with all applicable regulations and this instruction

- Ensure that the contractor submittals include a site-specific health and safety plan that provides for an OSHA competent person, includes a Lead Compliance Plan, and meets all requirements of the OSHA lead standard

5.4 Contracting Officer's Technical Representative (COTR)

- Attends training necessary to meet the OSHA and Environmental Protection Agency (EPA) competent person requirements
- Identifies suspected lead-containing materials not identified in the scope of work during renovation and construction activities; arranges for testing of the suspect material and, if the material does contain lead and will be disturbed during the project, ensures its removal by a qualified lead abatement contractor
- Ensures that lead-related work is performed in accordance with the contractor's site-specific health and safety plan, all applicable regulations, and SHeD guidance
- Ensure that contractor exposure monitoring data meets the information requirements of SHeD lead task and exposure database and is submitted to SHeD

5.5 Support Service Contractors

- Develop a health and safety plan that includes a lead compliance program for contractor operations
- Provide copies of air monitoring results and task data to SHeD (Note: Lead air monitoring data sheets are available from SHeD and may be used as a data sheet for adequate documentation.)

5.6 Research Personnel

- Shall note the use of lead on safety permit applications and contact SHeD when lead is to be used in projects that do not require a safety permit

5.7 Supervisors

- Notify SHeD of operations involving potential exposure to lead and enforce the use of engineering and work practice controls and PPE prescribed for the job

5.8 Employees

- Shall properly use engineering and work practice controls and PPE specified for their operations

5.9 Energy and Environmental Management Office (FE)

- Provides guidance and oversight on the disposal of lead-containing materials

Provides guidance and oversight of lead contaminated soils

6.0 REQUIREMENTS *(OSHA 29 CFR 1926.62 AND OSHA 29 CFR 1910.1025)*

It is the responsibility of all civil servants and support service contractors to ensure that lead-containing materials are removed or handled only by employees who are properly trained. Contractors shall develop their own lead compliance plan.

6.1 The following regulations apply, as per OSHA 29 CFR 1926.62 and OSHA 29 CFR 1910.1025:

6.1.1 Exposure limits

The following exposure limits indicate the maximum permissible exposure limit (PEL) and AL for airborne lead:

AL.—30 $\mu g/m^3$, 8-hr TWA

PEL.—50 $\mu g/m^3$, 8-hr TWA

6.1.2 Exposure assessment

Air monitor monitoring shall be in accordance with the National Institute for Occupational Safety and Health (NIOSH) or OSHA methods. Initial air monitoring shall be done to determine if any employee is exposed to lead above the PEL or AL.

6.1.3 Monitoring frequency

The following are lead monitoring frequencies as required by OSHA:

- None, if initial monitoring demonstrates exposures are less than the AL
- Quarterly, if exposures are above PEL
- Every 6 months, if exposures are greater than the AL but are less than the PEL; that frequency may be reduced if two consecutive samples, 7 days apart, are below the AL

Additional monitoring is required if there has been a change of equipment, process, control, or personnel. Also, additional monitoring is required if a new task may result in more employees being exposed to lead at or above the AL or may result in employees already exposed at or above the AL being exposed above the PEL.

6.1.4 Presumed exposure

Per OSHA, and until sampling shows otherwise, employees performing certain tasks will be presumed to be exposed above the PEL and shall be protected.

6.1.5 Personal protective equipment

OSHA requires protective equipment when engineering controls and work practices are not sufficient (or not yet implemented) to reduce exposures to or below the PEL or where employees are exposed to lead containing compounds, the following PPE is required:

- Respiratory protection (selection of the respirator is based on the SHeD hazard assessment of a specific task) (Note: A respirator will be provided whenever an employee requests one, but anyone who wears a respirator shall be included in the Respiratory Protection Program in accordance with OHPM Chapter 4.)
- Disposable protective coveralls and head covering
- Gloves, hats, and shoes
- Safety eyewear

6.1.6 Housekeeping

All surfaces shall be maintained free of lead accumulation. Use a high-efficiency particulate air (HEPA) vacuum or wet wipe where possible. Do not use compressed air to remove lead from dusty surfaces.

6.1.7 Hygiene facilities

Employees who are exposed to lead levels above the PEL will be provided with a change area and shower, and, where feasible, lunchroom and hand-washing facilities.

6.1.8 Hygiene practices

The following hygiene practices shall be conducted:

- No food or beverages, tobacco products, or cosmetic application shall be used or present in regulated areas.
- Hands shall be washed immediately at end of shift and before eating, drinking, using tobacco, or applying cosmetics.
- No protective clothing shall be taken from the regulated areas.
- When showers are not provided, workers shall wash their hands and face at the end of the work shift.
- Protective clothing shall be HEPA vacuumed prior to removal.

6.1.9 Administrative controls

If administrative controls are used as a means to reduce an employee's exposure time to lead, a job-rotation schedule will be established and implemented.

6.1.10 Medical surveillance

Employees who are or may be exposed to lead above the AL for more than 30 days in any 12 consecutive months will be included in the medical surveillance program. Also, employees who are occupationally exposed on any day above the AL may be included, upon request, in the medical surveillance program and employees may request multiple physicians review if they feel it is necessary. Employees will be notified of the results of tests and examinations as part of the medical surveillance program.

Medical surveillance includes, but is not limited to

- Annual medical examination blood test to establish lead level
- Physician's written opinion

The first medical examination under the surveillance program consists of biological monitoring and includes blood lead level and zinc protoporphyrin level.

A worker will be removed from the task causing the lead exposure when blood lead level is greater than 50 µg/dl and will not be returned to exposure until blood lead level is less than 40 µg/dl.

6.1.10 - SHeD shall verify requirements for this section to ensure compliance with the Chapter. SHeD verification shall be accomplished by reviewing medical records by a qualified individual, as required.

6.1.11 Signs

Warning signs will be posted in each work area where lead abatement is being conducted and when the likelihood that employees will be exposed to lead levels above the AL. The wording on the signs shall include

- WARNING
- LEAD WORKAREA
- POISON
- NO SMOKING OR EATING

6.1.12 Disposal

Waste Management representatives shall be contacted for assistance on proper disposal.

6.1.13 Training

Employees who work with lead but are exposed to less than the AL are required to attend the general lead awareness training that meets the requirements of the GRC Hazard Communication Program.

Employees exposed to lead at or above the AL on any day require further training on the following subjects:

- Content of the lead in construction standard
- Nature of operations that may result in lead exposure
- Purpose and description of the medical surveillance program
- Awareness of medical removal program and protection
- Routes of exposure
- Toxicity, health effects, and chelation therapy
- Possible engineering controls and work practices for tasks in which employees are involved
- Proper disposal methods

- Training is required annually

All employees who are required to use a respirator shall be enrolled in the GRC Respiratory Protection Program, Occupational Health Programs Manual, Chapter **4**.

6.1.13 - SHeD shall verify requirements for this section to ensure compliance with the Chapter. SHeD verification shall be accomplished by reviewing SATERN records or other personnel training records, as required.

6.1.14 Recordkeeping

A database of task descriptions, control techniques, and associated exposure levels will be maintained by SHeD. This database ensures worker protection by identifying procedures that minimize worker exposures, minimize costs by identifying tasks and procedures that do not result in employee exposure to lead, and help identify lead abatement methods that provide high-production levels without jeopardizing worker health and safety.

In accordance with the requirements of the 29 CFR 1910.1020 OSHA, Employee Access to Medical and Exposure Records Standard, both medical and industrial hygiene sampling records will be made available to affected employees or their representatives. Occupational Medical Services and/or SHEDwill maintain copies of these records.

6.1.14 - SHeD shall verify requirements for this section to ensure compliance with the Chapter. SHeD verification shall be accomplished through a combination of review processes (HASP's Safety Permits, design reviews, etc.) and/or worksite/building inspections.

6.2 Welding, Grinding, and Cutting

In addition to OSHA regulations, the following are GRC's requirements for conducting lead abatement:

Although a paint may be determined by analytical testing not to be an LBP (<600 ppm), the paint may still provide a significant exposure risk if it is significantly disturbed. It is the policy of GRC that no painted surface will be disturbed by activities such as welding, grinding, or abrasive cutting. All painted surfaces that will be disturbed by abrasive activities will have the paint removed by an OSHA competent person.

Lead paint abatement will be conducted following OSHA, EPA, and Ohio Department of Health regulations. In addition, the following GRC procedures and controls will be conducted.

- All painted surfaces will be abated at least 4 in. on either side of any cutline. This will include the inside and outside of any vessel or piece of equipment that is painted on both sides.
- The abatement contractor will isolate the work area using a regulated area that restricts access to the work area.
- The contractor shall provide for a wash station at the worksite. Workers will follow proper hygiene procedures, including washing hands before breaks, eating, smoking, or using the restroom, and at the end of the shift.
- Respirators will be provided during grinding or welding operations or SHeD air monitoring data will be provided, documenting a negative exposure assessment.
- The contractor shall provide mechanical ventilation that is HEPA filtered during all welding and grinding operations.
- The contractor shall provide HEPA-filtered "Smoke Eater" ventilation in occupied areas or areas that have multiple trades. All ventilation will be directed to an outside atmosphere.
- The contractor shall collect from surfaces any residue or dust generated by the grinding and welding operations. The contractor shall use wet methods or HEPA vacuums, and dispose of any residue waste through Waste Management.

6.2 - SHeD shall verify requirements for this section to ensure compliance with the Chapter. SHeD verification shall be accomplished through a combination of review processes (HASP's Safety Permits, design reviews, etc.) and/or worksite/building inspections.

7.0 RECORDS

SHED shall maintain the following records:

- Hazard assessments
- Air monitoring data
- Medical records retained by Medical Services
- Lead training presentation
- Hazard exposure assessment database

8.0 REFERENCES

Document Number	Document Name
29 CFR 1910.1025	U.S. Department of Labor, Occupational Safety and Health Administration - Lead
29 CFR 1926.62	U.S. Department of Labor, Occupational Safety and Health Administration – Lead exposure in Construction
1926.353 and 1926.354	Ventilation and protection in welding, cutting, and brazing
Title 10	Housing and Community Development Act of 1992
40 CFR 261	U.S. Environmental Protection Agency, Identification and Listing of Clean Air Act Amendments of 1990, Title III, Toxic Air Pollutants
GLM–QS–1800.1	GRC Occupational Health Programs Manual,

APPENDIX A.—DEFINITIONS AND ACRONYMS

American Conference of Governmental Industrial Hygienists (ACGIH)

Action level (AL).—Airborne concentration or level of an agent at which it is deemed that some specific action should be taken. In general the action level is set at one-half of the occupational exposure limit. The AL for lead is 30 $\mu g/m^3$ averaged over an 8-hour period.

Code of Federal Regulations (CFR)

Contracting Officer's Technical Representative (COTR)

Environmental Protection Agency (EPA)

Glenn Research Center (GRC)

High-efficiency particulate air (HEPA)

Housing and Urban Development (HUD)

Lead-based paint (LBP).—Any paint containing greater than 0.06 wt% (600 ppm).

National Institute for Occupational Safety and Health (NIOSH)

Occupational exposure limit (OEL).—A health-based workplace standard to protect workers from adverse exposure (e.g., permissible exposure limits, threshold limit values, etc.).

Occupational Safety and Health Administration (OSHA)

Permissible exposure limit (PEL).—The Occupational Safety and Health Administration term that establishes maximum allowable concentrations in air of substances in which nearly all workers may be repeatedly exposed 8 hr a day, 40 hr a week, for 30 yr without adverse effects. There are three different categories of PELs.

- **PEL–Ceiling (C)** is the limit that cannot be exceeded at anytime during the work shift.
- **PEL–Short-Term Exposure Limit (STEL)** is a 15-min time-weighted average (TWA) exposure that shall not be exceeded at any time during the workday unless another time limit is specified.
- **PEL–8-hr TWA** is the maximum allowable concentration in air of a substance averaged over an 8-hr period.

The PEL–8-hr TWA for lead is 50 $\mu g/m^3$.

Personal protective equipment (PPE)

Plum Brook Station (PBS)

Safety and Mission Assurance Directorate (SMAD)

Safety and Health Division (SHeD)

Skin notation.—Denotes the possibility that dermal absorption may be a significant contribution to the overall body burden.

Short-Term Exposure Limit (STEL)

Systemic effect.—Adverse affects other than at the site of contact.

Target organs.—Organs of the body most affected by exposure to a particular substance.

Threshold limit value (TLV).—Exposure limits recommended by the American Conference of Governmental Industrial Hygienists (ACGIH) under which it is believed that most people can work 8 hr a day, day after day, with no harmful effects. There are three different categories of TLVs.

- **TLV–Ceiling (C)** is the concentration that shall not be exceeded during any part of the working exposure.
- **TLV–Short-Term Exposure Limit (STEL)** A 15-min time-weighted average (TWA) exposure that shall not be exceeded at any time during a workday even if the 8-hr TWA is within the TLV–TWA. Exposures above the TLV–TWA up to the STEL shall be less than 15 min, occur less than 4 times/day, and there shall be more than 60 min between successive exposures. An averaging period other than 15 min may be recommended when warranted.
- **TLV–8-hr TWA** is the maximum allowable concentration in air of a substance averaged over an 8-hr period.

Time weighted average (TWA).—8-hr average concentration for an 8-hr workday for a 40-hr workweek.

Toxicity.—Inherent property of a chemical agent, its harmful effects on some biologic systems, and the conditions under which the effects occurs.

APPENDIX B.—RECOMMENDED CLEARANCE CRITERIA GUIDELINES AFTER LEAD ABATEMENT

The following table represents clearance criteria after a lead abatement project. Although there are no clear-cut cleanliness criteria for an industrial environment, this table represents a compilation of Housing and Urban Development (HUD) guidelines, Environmental Protection Agency (EPA) and Occupational Safety and Health Administration (OSHA) regulations, and industry "best practices." Many paints contain trace contaminants of other heavy metals other than lead. These other heavy metals may have more restrictive clean-up levels than lead. Because of this fact, it is GRC policy that no painted surface will be grinded, welded, or abraded without first removing the paint.

TABLE I.—CLEANLINESS CRITERIA FOR LEAD AND SELECT HAZARDOUS METALS

Location	Metal			
	Lead, $\mu g/ft^2$	Cadmium, $\mu g/ft^2$	Chromium, $\mu g/ft^2$	Zinc, $\mu g/ft^2$
Limited traffic or skin potential	400	40	40	16,000
Heavy traffic areas (aisles and walkways)	250	25	25	10,000
Workstations with high skin contact potential	100	10	10	4,000
Eating areas	40	4	4	1,600
OSHA permissible exposure limit	0.05 mg/m^3	0.005 mg/m^3	0.005 mg/m^3 (Cr VI)	15 mg/m^3 total 5 mg/m^3 resp.
ACGIH[a] threshold limit value	0.05 mg/m^3	0.01 mg/m^3 TLV 0.002 mg/m^3 resp.	0.01 mg/m^3	2 mg/m^3 10 mg/m^3 resp.

[a]American Conference of Governmental Industrial Hygienists (ACGIH).

For further assistance and guidance with Table I, contact the lead industrial hygienist at SHeD..

Contents

1.0 PURPOSE....2
2.0 APPLICABILITY....2
3.0 BACKGROUND....2
4.0 POLICY....2
5.0 RESPONSIBILITIES....3
5.1 Senior Industrial Hygienist....3
5.2 SHeD....3
Facilities Division (FD), Project Managers, Facilities Engineers, and Facilities Operations Personnel....4
5.3 Medical Director, Occupational Medicine Services....4
5.4 Logistics and Technical Information Division (LTID)....4
5.5 Supervisor....4
5.6 Employees....4
6.0 REQUIREMENTS....5
6.1 The Following Regulations Apply (OSHA 29 CFR 1910.1000)....5
6.2 Use of Current Materials....5
6.3 Hazard Assessment....5
6.4 Assessment of Vacuum Pumps....5
6.5 Disposal of Mercury-Contaminated Equipment....5
6.6 Mercury Spill Response Procedures....5
6.6.1 Containing Spills....6
6.6.2 Reporting Spills to Emergency Dispatch....6
6.7 Reducing the Risk....6
7.0 RECORDS....6
8.0 REFERENCES....7
APPENDIX A .—DEFINITIONS AND ACRONYMS....8
APPENDIX B .—MERCURY SPILLS AND AREA CLEARANCE TESTING....10
B.1 Purpose and Scope....10
B.2 Responsibilities....10
B.3 Prerequisites....10
B.3.1 Hazard Assessment of Area....10
B.3.2 Personal Protective Equipment....10
B.4 Precautions....11
B.5 Procedure....11
B.5.1 Equipment....11
B.5.2 Monitoring, Cleanup, and Testing....11
B.5.2.1 Airborne Vapor Test....11
B.5.2.2 Visual Inspection Test....11
B.5.2.3 Indicator Powder Test....12

Chapter 6—Elemental Mercury

NOTE: *The current version of this chapter is maintained and approved by the Safety and Health Division (SHeD). The last revision date of this chapter was May 2012. If you are referencing paper copies, please verify that it is the most current version before use. The current version is maintained on the Glenn Research Center (GRC) intranet at http://smad-ext.grc.nasa.gov/shed/pub/ohpm/ohpm-manual.pdf.*
Approved by Chief of Safety and Health Division.

1.0 PURPOSE

The purpose of this chapter is to eliminate or minimize employee exposure to mercury-containing materials through a system of administrative and engineering controls and safe work practices. The intent is to protect NASA property and the surrounding environment from mercury contamination by setting forth the policies and procedures to manage and clean up uncontrolled releases of mercury. The minimum requirements are established for the handling, using, removing, and disposing of mercury-containing materials at the NASA Glenn Research Center (GRC) and Plum Brook Station (PBS).

2.0 APPLICABILITY

This chapter is applicable to all personnel and operations at the GRC and PBS facilities. Contractors working at the GRC and PBS facilities are required to follow GRC operational procedures to protect NASA property and equipment. Contractors are required to have their own policies to protect employee health.

This document pertains to the elemental form of mercury; if you work with inorganic or organomercury compounds, please contact the SHED hygienist for work procedure evaluation.

3.0 BACKGROUND

Elemental mercury, a silvery, odorless, heavy liquid, was used at GRC in thermometers, manometers, barometers, electrical equipment, and as a propellant in ion propulsion systems. It is also found in mercoid electrical switches and mercury vapor and fluorescent lamps. Elemental mercury, also known as quicksilver, is not highly toxic as an acute poison, although inhaling high concentrations of mercury vapor for relatively brief periods can cause severe problems in the lungs and digestive system. Chronic exposure to mercury affects the nervous system, resulting in tremors, irritability, anxiety, manic depressive psychotic disturbances, and appetite and weight loss.

The current American Conference of Governmental Industrial Hygienists (ACGIH) and the GRC 8-hour, time-weighted average exposure limit for elemental mercury is 0.025 milligram per cubic meter (mg/m^3). The Occupational Safety and Health Administration (OSHA) and GRC have also established a ceiling concentration of 0.1 mg/m^3, which may not be exceeded for any time period.

4.0 POLICY

The policy of GRC is to comply with all applicable regulations regarding elemental mercury to prevent illness to workers, contamination of NASA property, and damage to the environment from its use and disposal. To implement this policy, all personnel must comply with the requirements of this chapter.

Whenever possible, a substitute for mercury-containing devices, such as mercoid switches, thermometers, gauges, and so forth should be made. All unnecessary mercury sources including but not limited to mercury manometers, thermometers, and other mercury-contaminated materials shall be removed and properly disposed of from the GRC and Plum Brook Station by completing a C–260a Waste Disposal form and contacting Waste Management.

Contaminated areas shall be identified and cleaned up by personnel trained in the hazards of mercury and proper handling, cleanup, and disposal procedures.

GRC policy defines mercury-contaminated surfaces as those which yield a mercury vapor level at or greater than 0.005 mg/m^3 when mechanically agitated.

It is GRC policy that mercury decontamination within areas controlled by research organizations be funded by those organizations.

5.0 RESPONSIBILITIES

It is the responsibility of civil servants, researchers, and support service contractors to ensure that mercury be removed or handled only by properly trained personnel.

5.1 Senior Industrial Hygienist

The senior industrial hygienist provides guidance on Federal, State, and local occupational health regulations.

- Helps Center personnel identify mercury-contaminated areas
- Conducts mercury surveys
- Supports industrial hygiene in mercury use, spill cleanup, and remediation projects
- Measures employee exposure levels, suggests procedures and personal protective equipment to minimize exposures, and recommends employees for inclusion in a mercury medical surveillance and monitoring program.
- Gives mercury awareness training
- Provides sampling and analysis to identify mercury contamination of vacuum pumps and other equipment
- Maintains a calibration station for the Jerome mercury air monitoring equipment and calibrates equipment as needed
- Manages and administers the medical surveillance program for civil servant employees exposed to mercury

5.2 SHeD

The SHeD provides guidance on the applicable Federal, State, and local environmental regulations.

- Maintains records of mercury disposal through Waste Management
- Reviews chemical purchases
- Notifies SHeD when a standard operating procedure (SOP) is submitted with mercury-containing material in use
- Conducts hazard communication training
- Provides guidance and oversight on the disposal of mercury through waste management within SHeD.
- Assesses and makes recommendations on air, water, or soil pollution
- Oversees spill cleanup and soil and water remediation projects
- Performs some types of analysis of mercury contamination in various mediums

5.3 Energy and Environmental Management Office (FE)

- Provides guidance on and oversight of the disposal of mercury-containing materials and wastes
- Ensures that mercury-contaminated material be properly packaged and stored prior to disposal
- Coordinates mercury-spill cleanups and decontamination by contractors
- Provides guidance on the requirements of Federal, State, local, GRC transportation and environmental disposal requirements
- Performs decontamination for small spills
- Maintains records of mercury disposal

Facilities Division (FD), Project Managers, Facilities Engineers, and Facilities Operations Personnel

As part of their role in construction, demolition, and rehabilitation projects, these personnel identify and provide remediation of mercury contamination.

- Ensure that areas contaminated or possibly contaminated with mercury be managed to minimize employee exposure to mercury
- Ensure that renovation project plans identify mercury-contaminated areas and provide for cleanup
- Identify areas with suspected mercury contamination not listed in the original scope of work but surface during construction activities
- Arrange for testing to determine the level of mercury contamination
- Ensure cleanup of any contamination by a qualified contractor
- Ensure that mercury-related work be performed in accordance with all applicable regulations and SHED guidance

5.3 Medical Director, Occupational Medicine Services

The Director of Medical Services is responsible for overseeing medical records and programs for employees exposed to hazardous substances.

- Maintains medical surveillance programs for civil servant and contractor employees exposed to hazardous chemicals that require medical monitoring
- Keeps complete, accurate records of all medical examinations for personnel in the medical surveillance program; retains the records for at least 30 years; discusses the results of examinations with employees as needed
- Notifies employees of medical surveillance results
- Notifies the appropriate SHeD industrial hygienist about employees who may require an exposure evaluation based on clinical findings

5.4 Logistics and Technical Information Division (LTID)

Each department supervisor is responsible for procuring alternative devices to those containing mercury.

5.5 Supervisor

- Notifies SHeD of operations involving exposure to mercury
- Enforces requirements for the use of engineering and work practice controls and personal protective equipment

5.6 Employees

- Report to Waste Management (FE) quantities of mercury stored in vials, bottles, or equipment
- Notify SHeD of operations involving mercury
- Use appropriately the engineering controls, work practice controls, and personal protective equipment specified for their operations
- Dispose of properly all mercury-containing devices (i.e., thermometers, mercoid switches, barometers, etc.) through Waste Management.
- Fill out the C–260a form and submit it to Waste Management (FE).
- Shall receive mercury awareness training if mercury use is specified for their operations.

5.7 - SHeD shall verify requirements for this section to ensure compliance with the Chapter. SHeD verification shall be accomplished by reviewing SATERN records or other personnel training records, as required.

6.0 REQUIREMENTS

It is the responsibility of all civil servants and support service contractors to ensure that mercury be removed or handled only by employees who are properly trained. Contractors must develop their own mercury compliance plan.

6.1 The Following Regulations Apply (OSHA 29 CFR 1910.1000)

6.2 Use of Current Materials

SHED shall be kept apprised of mercury use throughout the lab.

6.2 - SHeD shall verify requirements for this section to ensure compliance with the Chapter. SHeD verification shall be accomplished through a combination of review processes (HASP's Safety Permits, design reviews, etc.) and/or worksite/building inspections.

6.3 Hazard Assessment

A hazard assessment shall be required by an industrial hygienist when the following conditions exist.

- A request for a purchase of mercury
- A process that uses mercury changes
- A planned new task not previously assessed uses mercury
- A plan to use equipment known or suspected of containing mercury
- Areas known or suspected of being contaminated by mercury
- Individuals who currently use mercury and need to schedule a hazard assessment to be performed during the next planned use

The user or area supervisor shall contact SHeD prior to use and arrange for an industrial hygienist to observe the handling of the material, assess the hazards, and perform exposure monitoring if necessary.

Results from the hazard assessment will be reported in writing with findings and recommendations. In addition, any equipment suspected of containing mercury will be tagged with the results of the survey.

6.3 - SHeD shall verify requirements for this section to ensure compliance with the Chapter. SHeD verification shall be accomplished through a combination of review processes (HASP's Safety Permits, design reviews, etc.) and/or worksite/building inspections.

6.4 Assessment of Vacuum Pumps

Prior to the dismantling, repairing, removing, or altering of vacuum pumps, they shall be tested for mercury contamination. Contact Energy and Environmental Management Office (FE)for testing the pump oil to determine if the pump is mercury contaminated.

6.5 Disposal of Mercury-Contaminated Equipment

All mercury-containing equipment be disposed of shall be drained and the mercury reclaimed. To dispose of mercury-containing or -contaminated equipment, submit a NASA C–260a form to property disposal. FE maintains the records for disposal of mercury and mercury-contaminated wastes.

6.6 Mercury Spill Response Procedures

It is imperative that employees shall not attempt to clean up a mercury spill by themselves because they can inadvertently spread the contamination. Regular vacuum cleaners, mops, and brooms must never be used to clean up a mercury spill. Heat from the vacuum motor will increase the amount of mercury vapor in the air. Mops and brooms will spread the mercury, making proper cleanup more difficult and costly. The vacuum cleaner, mop, or

broom will become contaminated and require disposal as hazardous waste. Mercury cannot be disposed of down the drain or in the trash.

Appendix B (MERCURY SPILLS and AREA CLEARANCE TESTING) presents recommended practices to address mercury spills and associated clearance testing. Equivalent methods may be used but shall be reviewed and approved by the SHeD program lead (443–5501) prior to implementation.

6.6.1 Containing Spills

- Evacuate the area and prevent traffic from going through the spill area.
- Before people leave, direct them to a nearby location away from the spill and ask them to stay there until contamination can be assessed.

Dupont Tyvek® booties will be provided to anyone entering the spill area to prevent the contamination of shoes and to reduce the spread of mercury.

6.6.2 Reporting Spills to Emergency Dispatch

Call 911 from a NASA phone or call 216–433–8888 for Lewis field from a cell phone to report a spill and give the following information. For PBS call 9-1-1 from a NASA phone of call 419-621-3222 and give the following information.

- Your name
- Phone number where you can be contacted
- Department, building, and room number where the mercury is located

6.7 Reducing the Risk

The most effective method of reducing personal exposure to mercury and avoiding a costly spill cleanup is to properly dispose of all mercury-containing devices and replace them with less toxic alternatives.

- For disposal of mercury-containing equipment, simply complete a C–260a form and Waste Management personnel will remove and dispose of the equipment at no cost.
- For assistance with replacing mercury-containing equipment and devices with mercury-free alternatives, contact the mercury program lead at 433–5501.

If you must work with mercury as part of your research, consult with the mercury program lead at 433–5501 to develop work practices that minimize the risk of exposure.

6 - SHeD shall verify requirements for this section to ensure compliance with the Chapter. SHeD verification shall be accomplished through a combination of review processes (HASP's Safety Permits, design reviews, etc.) and/or worksite/building inspections.

7.0 RECORDS

SHeD maintains the following records.

- Hazard assessments
- Survey monitoring data sheets
- Hazard/exposure assessment database
- Calibration documents for the mercury vapor analyzer

8.0 REFERENCES

Document number	Document name
29 CFR 1910.1000	U.S. Department of Labor, Occupational Safety & Health Administration (OSHA), Air Contaminants
Memo, November 8, 1989	From director of Technical Services and chairman of the Environmental Pollution Control Board regarding use of mercury manometers for pressure measurement
Memo, June 2, 1993	From director of Technical Services and chairman of the Environmental Pollution Control Board regarding use of mercury manometers for pressure measurement
Memo, August 12, 1991	From GRC mercury coordinator regarding recall of all mercury

APPENDIX A.—DEFINITIONS AND ACRONYMS

Action level.—Concentration or level of an agent at which it is deemed that some specific action should be taken; in general, the setting of one-half the adopted occupational exposure limit (OEL)

American Conference of Governmental Industrial Hygienists (ACGIH)

Environmental Protection Agency (EPA)

Facilities Division (FD)

Glenn Research Center (GRC)

High-efficiency particulate air (HEPA) filter.—Filter that can trap and retain at least 99.97 percent of all monodispersed particles 0.3 μm in diameter

Logistics and Technical Information Division (LTID)

Manometer.—Instrument used for measuring pressure; a U-tube partially filled with a liquid (usually water, mercury, or a light oil), constructed such that the amount of liquid displaced indicates the pressure exerted on the instrument

Mercury-contaminated surface.—Surface on which the mercury vapor level is at or is greater than 0.005 mg/m^3 when mechanically agitated

Neurotoxin.—Substance harmful to the nervous system or brain

Occupational exposure limit (OEL).—Health-based workplace standard that protects workers from adverse exposure (e.g., PEL and TLV).

Occupational Safety & Health Administration (OSHA)

Permissible exposure limit (PEL).—OSHA term that establishes maximum allowable concentrations in air of substances to which nearly all workers may be repeatedly exposed for 8 hours a day, 40 hours a week, for 30 years without suffering adverse effects. The three categories of PELs are

- **PEL-ceiling (C)**.—Limit that cannot be exceeded at any time during the work shift
- **PEL-short-term exposure limit (STEL)**.—5-minute, time-weighted average (TWA) exposure that shall not be exceeded at any time during the workday unless another time limit is specified
- **PEL-8-hour, time-weighted average (TWA)**.—Maximum allowable concentration in air of a substance averaged over an 8-hour period

Personal protective equipment (PPE)

Plum Brook Station (PBS)

Safety, Health and Environmental Division (SHeD)

Skin notation.—Denotes the possibility that dermal absorption may be a significant contribution to the overall body burden

Standard operating procedure (SOP)

Systemic effect.—Adverse effect other than that at the site of contact

Target organs.—Organs of the body most affected by exposure to a particular substance

Threshold limit value (TLV).—ACGIH recommended exposure limits under which it is believed that most people can work 8 hours a day, day after day, with no harmful effects. The three categories of TLVs are

- **TLV-ceiling (C)**.—Concentration that should not be exceeded during any part of the workday exposure
- **TLV-short-term exposure limit (STEL)**.—15-minute TWA exposure that should not be exceeded at any time during a workday, even if the 8-hour TWA is within the TLV-TWA. Exposures above the TLV-TWA up to the STEL should not be longer than 15 minutes, should occur no more than four times per day, and

should be at least 60 minutes between successive exposures. An averaging period other than 15 minutes may be recommended when warranted.

- **TLV-8-hour, time-weighted average (TWA)**.—Maximum allowable concentration in air of a substance averaged over an 8-hour period

Time-weighted average (TWA).—Average concentration for an 8-hour workday, 40-hour workweek

Toxicity.—Inherent property of a chemical agent, its harmful effects on some biologic systems, and the conditions under which the effects occur

APPENDIX B.—MERCURY SPILLS AND AREA CLEARANCE TESTING

This appendix is a condensed outline of the mercury spill and area clearance testing procedure conducted at Brookhaven National Laboratory (BNL). The BNL procedure has been adapted to meet the requirements and goals of GRC and PBS and is presented herein as their recommended practice.

B.1 Purpose and Scope

This procedure documents the building re-occupancy testing and clearance criteria for spills of *elemental* mercury in indoor locations. It is used after cleanup with high-efficiency particulate air (HEPA) filtration and/or mercury adsorbents. This procedure is not intended for use in measuring employee exposure levels during routine or emergency situations, or to measure the environmental consequences of releases, or to determine the status of environmental compliance release of the area.

B.2 Responsibilities

This procedure will be implemented through SHED (or an alternative method approved by the lead industrial hygienist). Only persons, who thoroughly understand this procedure and are competent to operate the detection equipment, as determined by the lead industrial hygienist, should conduct this testing.

B.3 Prerequisites

Prior to testing, the detection equipment must be in good working order and be calibrated per manufacturer recommendations.

B.3.1 Hazard Assessment of Area

- Using a direct-reading meter does not pose significant employee health risks, but this procedure may be performed in areas with mercury contamination. Do not perform sampling until a competent individual has assessed the hazards of the area.
- Handing the indicator powder is hazardous, and protective equipment must be used.

B.3.2 Personal Protective Equipment

Appropriate personal protective equipment for collecting the sample, handling the indicator powder, and working around spilled mercury follows.

- Hand
  - Use disposable, exam-style, splash gloves made from acceptable elastomers, such as nitrile, polyvinyl chloride (PVC), and natural rubber.
  - Remove and dispose of the gloves immediately after spreading the indicator powder. Then put on a second pair of gloves to further handle equipment.
- Body
  - Use a disposable suit if body contact with contaminated surfaces is anticipated. Acceptable materials are DuPont Tyvek®, Kimberly-Clark KLEENGUARD™, and cotton.
  - Disposable garments must be discarded as mercury waste if suspected contact with contamination has occurred.
  - If personal clothing items become contaminated, they must be surrendered to Waste Management for disposal.
- Foot
  - Use disposable shoe coverings, boots, or booties if foot contact with contaminated surfaces is anticipated. Acceptable materials are DuPont Tyvek®, Kimberly-Clark KLEENGUARD™, and rubber.
  - If personal shoes become contaminated, they must be surrendered to Waste Management for disposal.

- Eye
  - Use safety glasses with side shields as required in all laboratories, construction, and general industry work areas.
  - Use vapor-proof goggles or full-face respirators if exposure is above the occupational exposure limit (PEL/TLV).
- Respiratory
  - Respiratory protection is not required under normal use.
  - Respirators are required if mercury in the area exceeds (as indicated by the direct-reading meter) or is likely to exceed the OSHA or ACGIH standards.
  - An OSHA-competent person must conduct the respirator evaluation and selection.
- Environmental impact and waste disposal
  - Direct-reading meters do not adversely impact the environmental or create waste for disposal.
  - Indicator powders are considered hazardous waste and must be handled, transported, and disposed of in accordance with Waste Management requirements.

B.4 Precautions

- Verify that testing personnel will not be exposed to hazardous airborne levels of mercury by testing the highest probability source first. Move slowly and systematically to allow the meter to respond to mercury vapors.
- Use appropriate respiratory protection if indicated by the airborne vapor levels. The appropriate respiratory protection equipment used must be reviewed by the senior industrial hygienist of SHeD.
- Test all sources in a manner so as not to place the tester's breathing zone in the vicinity of a suspected spill source.

B.5 Procedure

B.5.1 Equipment

- Appropriate PPE
- Mercury indicator powder, J.T. Baker product number 4509–01 or equivalent
- Jerome® Mercury Meter 431X or equivalent

B.5.2 Monitoring, Cleanup, and Testing

- Observe that the cleanup of the spill follows an approved procedure and that appropriate PPE and exposure monitoring are conducted.
- Initiate clearance testing after appropriate abatement is accomplished.

B.5.2.1 Airborne Vapor Test

- Use a direct-reading meter to sample at a height of 1 inch above the entire surface of the spill area.
- Mechanically agitate the test surfaces with a wire brush. If no concentration above 0.005 mg/m^3 is detected, the surface passes the airborne vapor test.

B.5.2.2 Visual Inspection Test

- Use a flashlight or lamp at an oblique angle to visually examine surfaces and crevices for shiny, silvery droplets of mercury. If no droplets are observed, proceed to indicator powder testing.
- If droplets are observed, instruct the appropriate personnel to repeat the approved cleanup procedure.

B.5.2.3 Indicator Powder Test

This test is required in lieu of the airborne vapor test.

- Spread the indicator powder in a thin film over the entire surface of the spill area and extend at least 6 inches beyond areas cleaned on all sides. Minimize dust generation when spreading the powder.
- Make sure to spread powder into cracks and crevices and low spots.
- Remove the cabinet drawers to access the space behind cabinet kickboards, if appropriate.
- Mix the powder with water and paint the mixture on vertical surfaces. Allow the indicator powder to set on the surfaces.
- Strong positive responses (change to black) may occur as soon as 5 minutes. After hours, if no color change occurs in the powder (i.e., from white to pink, orange, or black spots in any part of the powder), the surface passes the indicator powder test.
- Remove the indicator powder from surfaces after the test. Appropriate personnel should use a mercury-designated HEPA vacuum to clean up the area. Handle the powder residue in the vacuum cleaner as per instructions from Waste Management.
- Instruct the appropriate personnel to repeat the approved cleanup procedure if the area fails either the indicator powder test or the airborne vapor test. Then repeat the airborne vapor test or indicator powder test.
- Submit all field observations and test results to the lead industrial hygienist within SHeD for review prior to releasing the area to the general public.

Contents

1.0 PURPOSE....2
2.0 APPLICABILITY....2
3.0 BACKGROUND....2
4.0 POLICY....2
5.0 RESPONSIBILITIES....2
6.0 REQUIREMENTS....4
7.0 RECORDS....4
8.0 REFERENCES....4
APPENDIX A .—DEFINITIONS AND ACRONYMS....6
APPENDIX B .—INDUSTRIAL HYGIENE PROCEDURE: TESTING LOCAL EXHAUST VENTILATION (LEV) SYSTEMS....8
APPENDIX C .—INDUSTRIAL VENTILATION: A MANUAL OF RECOMMENDED PRACTICE FOR DESIGN, 27th EDITION FIGURES:....20

Chapter 7—Local Exhaust Ventilation (LEV)

Note: *The current version of this chapter is maintained and approved by the Safety and Health Division (SHeD). The last revision date of this chapter was April 2012. The current version is located on the Glenn Research Center intranet at http://smad-ext.grc.nasa.gov/shed/pub/ohpm/ohpm-manual.pdf. Approved by the Chief of Safety and Health Environmental Division.*

1.0 PURPOSE

This chapter establishes minimum requirements for local exhaust ventilation (LEV), an engineering system used for controlling occupational exposure to air contaminants at the Glenn Research Center (GRC).

2.0 APPLICABILITY

The provisions of this document are applicable to SHeD personnel as well as other NASA Glenn Research Center personnel and contractors associated with the review of SHeD program chapters.

3.0 BACKGROUND

GRC personnel use a variety of materials, ranging from inert gases to highly toxic, carcinogenic materials. Local exhaust ventilation is a specific engineering control used to minimize worker exposure to airborne hazardous substances.

A LEV system typically consists of at least a hood to capture or contain the contaminants, ducts to transport the air containing the contaminants, and a fan to power the system. Depending on the system and the level of contaminant generation, the LEV may be equipped with an air filtration unit, such as high-efficiency particulate air (HEPA) filters, scrubber, electrostatic precipitator, or other air pollution control device.

Examples of LEV at GRC include laboratory fume hoods, exhausted gas cabinets, snorkels (e.g., welding fume control), canopies, and spray painting booths. Local exhaust ventilation for toxic materials may require an air pollution permit for operation. Please refer to the GRC Environmental Programs Manual (EPM), Chapter 4, “Air Pollution Control” for additional information.

4.0 POLICY

Construction, installation, inspection, and maintenance of all LEV systems shall comply with the Occupational Safety & Health Administration (OSHA) standards, as well as with national consensus standards, such as the American National Standards Institute (ANSI) and the American Conference of Governmental Industrial Hygienists (ACGIH).

5.0 RESPONSIBILITIES

SHeD

LEV Program Lead shall

- Give guidance on the requirements for conducting LEV system surveys
- Provide guidance on the requirements of Federal, State, and local ventilation regulations, as well as on standard industry practice guidelines
- Update the Industrial Hygiene Procedure: Testing Local Exhaust Ventilation (LEV) Systems manual (see Appendix **B**)
- provide training on LEV systems

Technician shall

- Conduct annual surveys of LEVs
- Maintain database for LEV systems

- Follow the Industrial Hygiene Procedure: Testing Local Exhaust Ventilation (LEV) Systems manual (see Appendix **B**)

Safety Inspectors shall

- Report any LEV system not in compliance to the operations team technician, program lead or industrial hygienist

Occupational Health Branch Chief shall

- Provide final approval of the Testing Local Exhaust Ventilation Systems manual

Waste Management shall

- Ensure that potentially contaminated ventilation equipment is disposed of properly

Area Safety Committee Industrial Hygiene Members shall

- Review new or modified LEV installations and assist with the compliance of this program
- Report any discrepancies to the LEV Program Lead

Facilities Division (FD), Project Engineers shall

- Obtain training either through college course work or continuing education in ventilation design for contaminant control as outlined in the Industrial Ventilation: A Manual of Recommended Practice, 27th edition, 2010 or later
- Obtain support from the LEV Program Lead during the design phase of projects that may require local exhaust ventilation
- Ensure that LEV design specifications comply with the requirements of this program and standards
- Review and approve all new or modified LEV systems prior to purchase and installation
- Inform the LEV Program Lead of all newly installed or modified LEV systems and request a ventilation survey before releasing the system for use

Support Service Contractors, Operations and Maintenance Personnel shall

- Inform the LEV Program Lead of any modifications or repairs of LEV systems and request a ventilation survey before releasing the system for use

LEV Operators/Users/Designees
Supervisors/Safety Permit Holders shall

- Ensure that LEV is operated in accordance with the requirements of this program
- Stop operations, tag the LEV "out of service," and contact F-IXIT (3–4948) if a LEV system is suspected of being deficient or if a continuous-airflow monitoring device malfunctions
- Contact FD and LEV Lead for design assistance and approvals prior to the preliminary stages of tasks involving the installation or modification of LEV systems (All LEV systems must be reviewed and approved by FD before they are installed.)
- Inform LEV Lead of all newly installed LEV systems and all modifications or repairs of LEV systems and request a ventilation survey before releasing the system for use

LEV Users/Designees shall

- Operate LEV systems in accordance with this program
- Report any LEV that does not appear to adequately control exposure to air contaminants
- Respond to a laboratory hood that is alarming by immediately lowering the sash to a level at which the alarm ceases and resetting it (If the alarm continues, notify the LEV Lead and submit a work request to the Facility Division's F-IXIT for repair.)

- Enlist area safety committee members, in their review of new or modified LEV installations, to assist with the compliance of this program and to report any discrepancies to the LEV Lead
- Require that employees who need to operate unfamiliar LEV systems request training for the appropriate use of the LEV system from their supervisor or from one of the SHeD industrial hygienists

6.0 REQUIREMENTS

All active LEV systems are inspected, velocity flow tested and have their monitor gauges checked at least annually by the LEV technician to comply with NPR 1800.1 and 29 CFR 1910.94. If the checks are not satisfactory, a work request (WR) must be initiated by the owner/operator of the LEV system. Each LEV system shall be tagged (green, yellow, or red) with an identification number, the date of the test (month/year), and the name and telephone number of the person conducting the inspections. Appendix **B** of this document sets forth the procedure in the appendixes of the Industrial Hygiene Procedure: Testing Local Exhaust Ventilation (LEV) Systems.

6.0 The SHeD verification procedure for this section shall include review, by the Program Lead, of the LEV database for currentness and building inspection findings related to overdue compliance tags.

- NPR 1800.1
- 29 CFR 1910.94

7.0 RECORDS

Ventilation Surveys

The database for ventilation surveys shall be maintained by the LEV technician and shall be kept in network location vents$(\\smad1)(v:).

Training Records

LEV training records shall be maintained in System for Administration, Training, Education Resources for NASA (SATERN).

LEV Supervisors/Safety Permit Holders are required to attend Laboratory and Local Exhaust Ventilation Function and Safety training (SATERN course number: GRC–4R1631).

LEV Users/Designees shall receive training on the specific equipment from their supervisors, and the supervisors shall be responsible for submitting the training record information (C-forms on-the-job training #40) to SATERN for inclusion in the attendee's training record.

Hood Repair Records

Hood repair records shall be maintained in the FD current work order database system.

Safety Inspections

Ventilation systems shall be added to the safety inspection forms by the building inspectors under the current inspection system.

8.0 REFERENCES

Document number	Document name
29 CFR 1910.94	Occupational Safety & Health Administration (OSHA), Ventilation in General Industry
ACGIH Industrial Ventilation	American Conference of Governmental Industrial Hygienists, Industrial Ventilation: A Manual of Recommended Practice, 27th edition, 2010
ACGIH Industrial Ventilation	American Conference of Governmental Industrial Hygienists, Industrial Ventilation: A Manual of Recommended Practice for Operations and Maintenance 1st edition, 2007

CDC	Biosafety in Microbiological and Biomedical Laboratories (BMBL) 5th Ed. HHS Publication No. (CDC) 21-1112, 2009.
NSF	National Science Foundation (NSF) American National Standards Institute (ANSI) International Standard Number 49.
Appendix B	NASA Glenn Research Center, Testing Local Exhaust Ventilation (LEV) Systems guidance manual, April 2012
NPR 1800.1	NASA Procedural Requirements, NASA Occupational Health Program Procedures
Z9.2	American National Standards Institute (ANSI), Fundamentals Governing the Design and Operation of Local Exhaust Systems, 2006
Z33.1	American National Standards Institute (ANSI), Installation of Blower and Exhaust Systems for Dust, Stock, and Vapor Removal or Conveying, 1961
NFPA 91	National Fire Protection Association Standard for Exhaust Systems for Air Conveying of Vapors, Gases, Mists, and Noncombustible Particulate Solids, 2010
Z9.5	American National Standards Institute (ANSI), American National Standard for Laboratory Ventilation, 2003

APPENDIX A.—DEFINITIONS AND ACRONYMS

American Conference of Governmental Industrial Hygienists (ACGIH)

American National Standards Institute (ANSI)

Air cleaning device.—Device that separates contaminants from the airstream before discharge to the ambient air; filters, scrubbers, electrostatic precipitators, cyclones, dropout boxes, and afterburners

Air filter.—Mechanical device that removes contaminants from the airstream

Air velocity.—Rate of air motion in a given direction, measured as distance per unit time; meters per second (m/sec), feet per minute (ft/min or fpm), miles per hour (mph)

Anemometer.—A device for measuring air velocity and commonly used to take face velocity measurements

Carcinogen.—Substance or agent capable of causing or producing cancer in mammals, including humans; a chemical is considered to be a carcinogen or potential carcinogen if it has been

- Evaluated by the International Agency for Research on Cancer (IARC) and found to be a carcinogen or potential carcinogen
- Listed as a carcinogen or potential carcinogen in the annual report on carcinogens published by the National Toxicology Program (NTP)
- Regulated by OSHA as a carcinogen

Capture velocity.—At any point in front of the hood, the velocity of air necessary to overcome opposing air currents and to capture the contaminated air by causing it to flow into the exhaust hood

Duct.—Passageway made of sheet metal or other suitable material used for conveying air, gases, vapors, dust, mist, or fumes; usually exhausts contaminants from the hood outside the building

Entry loss.—Loss in pressure caused by airflow resistance in a duct or hood; usually measured in inches of water gauge

Environmental Programs Manual (EPM)

Fan.—Local exhaust ventilation system component that provides the energy required by a specific design to move air through a system

Flow monitor.—Device used on a lab fume hood to continually monitor the hood face velocity of the air entering the hood

International Agency for Research on Cancer (IARC)

HEPA filter.—Filter that removes at least 99.97 percent of airborne particles 0.3 micrometer (µm) in diameter; composed of a mat of randomly arranged fiberglass fibers having diameters between 0.5 and 2.0 µm. Key factors affecting function are fiber diameter, filter thickness, and face velocity. The air space between HEPA filter fibers is much greater than 0.3 µm. Unlike membrane filters, where particles as wide as the largest opening or distance between fibers cannot pass in between them at all, HEPA filters are designed to target much smaller particles. Diffusion predominates below the 0.1-µm-diameter particle size. Impaction and interception predominate above 0.4 µm. In between, near 0.3 µm, diffusion and interception predominate.

High-efficiency particulate air (HEPA)

Hood face velocity.—Air velocity measured at the hood face opening in feet per minute (fpm)

Inclined Manometer.—A device for measuring air pressure and routinely used in LEV systems to monitor for filter condition (service life indicator)

Industrial hygienist (IH)

Inert gas.—Gas that does not react or undergo any change of state in a system or process

Laboratory fume hood.—Device that encloses, captures, or receives emitted contaminants to effectively capture and control contaminants at the source with minimum airflow and power consumption; a shaped inlet designed to capture contaminated air and direct it into the exhaust duct system

Local exhaust ventilation (LEV).—System that captures and removes emitted contaminants before they are released into the workplace environment; components are the hood, or air capture device, duct system, air cleaning device, fan, and exhaust stack

Magnehelic guage.—A device for measuring air pressure and routinely used in LEV systems to monitor for filter condition (service life indicator)

National Toxicology Program (NTP)

Occupational health (OH)

Occupational Safety & Health Administration (OSHA)

Plenum.—Chamber used in local exhaust ventilation systems to equalize pressure

Personal protective equipment (PPE)

Pressure, static.—Potential pressure exerted in all directions by a fluid at rest. For a fluid in motion, pressure is measured in a direction normal to the direction of flow and is usually expressed in inches water gauge when dealing with air. Static pressure is the tendency to either burst or collapse a duct.

Pressure, velocity.—Kinetic pressure in the direction of flow necessary to cause a fluid at rest to flow at a given velocity that is usually measured in inches water gauge

Stack.—Device used to discharge air away from a building

System for Administration, Training, Education Resources for NASA (SATERN)

Toxicity.—Relative property of a chemical agent that refers to the harmful effect it exerts on some biologic mechanism and the conditions under which the effect occurs

Ventilation.—process of supplying or removing air by natural or mechanical means to or from any space

Work request (WR)

APPENDIX B.—INDUSTRIAL HYGIENE PROCEDURE: TESTING LOCAL EXHAUST VENTILATION (LEV) SYSTEMS

1.0 PURPOSE

This procedure will establish guidelines for evaluating the function of local exhaust ventilation (LEV) systems, which are also known as process exhaust systems. The general steps in this process include determining what flow is needed to remove the contaminant of interest, deciding how best to measure this flow in a safe, efficient, and reproducible manner, documenting these flow requirements and flow measurements, and communicating relevant results to our customers.

2.0 References

2.1 Applicable Documents

Document Number	Document Title
ACGIH	INDUSTRIAL VENTILATION, A Manual for Recommended Practice for Design, 27th edition
GRC OHPM, Chapter 7	Glenn Research Center, Occupational Health Programs Manual, Chapter 7, Local Exhaust Ventilation

2.2 Records and Forms

C–760a	Local Exhaust Ventilation (LEV) Survey Tag—Green
C–760b	Local Exhaust Ventilation (LEV) Warning Notice Tag—Yellow
C–760c	Local Exhaust Ventilation (LEV) Out of Service Notice Tag—Red

The forms listed above are located at the end of Appendix B in the Testing Local Exhaust Ventilation (LEV) Systems manual.

2.3 Definitions

Area (A).—Surface area of a hood opening or duct; measured as round duct $A = 3.14 \times (\text{radius})^2$ or $A = 0.79\times(\text{diameter})^2$; typically measured as rectangular duct $A = (\text{length}) \times (\text{width})$ in square feet (ft^2)

Duct.—Passageway made of sheet metal or other suitable material used for conveying air, gasses, vapors, particulates, mist, or fumes

Local exhaust ventilation (LEV).—Industrial ventilation system that captures and removes emitted contaminants before they are released into the workplace environment

Pitot tube probe.—Type of probe that simultaneously measures the static pressure and total pressure within a duct, thereby allowing the velocity pressure to be calculated.; velocity is proportional to the square root of the velocity pressure times 4004.4 for dry air at 70 °F and a barometric pressure of 29.92 inches (in.) of mercury (Hg).

Thermal anemometer probe.—Type of probe used to measure velocity and depends upon the known thermal capacitance of an airstream to cool the thermocouple ("hot wire") once it has been heated

Velocity (V).—Time rate of movement of air in a given direction, typically measured as feet per minute (ft/min or fpm), meters per second (m/sec), or miles per hour (mph)

Velocity, face.—Air velocity measured at the face opening of a hood or duct

Velocity, capture.—Velocity of the air induced by a hood to capture emitted contaminants external to the hood; acceptable capture velocity depends upon the mass of the contaminant being captured, the prevailing air currents nearby, thermal properties of the contaminant (e.g., hot fumes rise), and the velocity of the contaminant relative to hood flow (e.g., belt sander throwing dust into or away from its exhaust duct).

Volumetric flow rate (Q).—Volume or quantity of air that passes a given location per unit of time and that is related to the average velocity and cross-sectional area by $Q = VA$

3.0 DISCUSSION

Local exhaust ventilation, or process exhaust, systems are used throughout industrial and laboratory environments to move airborne contaminants away from workers to minimize their exposures. These systems must be designed to not only handle the type and quantity of contaminant being generated but also to accommodate the employee and work activities associated with the task. LEV systems are composed of several components that include the hood, ducting, air mover, and possibly some type of contaminant removal mechanism. The design of such systems must also take into account the facility where the LEV will be located and the other ventilation systems therein. The design and layout of LEV systems is performed by Facilities Division engineering staff with input from a SHeD industrial hygienist (IH).

Evaluating the performance and adequacy of process exhaust systems at the worker-LEV interface is performed by industrial hygiene staff. Many parameters must be considered when determining the flow velocity and rate necessary to adequately remove a contaminant from a work zone and successfully transport it through the ventilation system. Considerations include contaminant type (particle or gas), particle size (if not a gas), contaminant temperature, contaminant initial velocity (speed and direction), ambient air movement, hood type, hood location, and worker location. Periodic checks of the LEV system are used to compare system performance to the established flow parameters and also to determine if the system/equipment setup has changed, necessitating the establishment of new flow parameters.

4.0 Safety Precautions

Testing of local exhaust ventilation systems can involve potential safety and health hazards that must be managed appropriately. When there are questions regarding the LEV system or equipment, IH personnel should contact the individual responsible for the LEV system, experimental rig, or facility/room as needed.

Safety considerations associated with surveying LEV systems include those related to working on step ladders or step stools to make flow measurements, entering areas with industrial safety hazards (foot, hand, eye , etc.), and any potential safety hazards presented by the experiment/equipment or materials being stored or used. Managing such hazards involves following prescribed precautions and wearing appropriate personal protective equipment (PPE).

Potential occupational health (OH) hazards associated with testing LEV systems will vary and depend upon the status of the contaminant-generating activity or material/chemical storage/use and the efficacy of the ventilation system. The surrounding work environment could also present OH concerns that should be considered (e.g., high noise, lasers) Again, these hazards can be managed by using appropriate PPE and by following any specifically prescribed safety precautions in addition to observing the general work practices associated with working in a research environment.

5.0 Tools, Equipment and Materials

5.1 TSI VelociCalc® Air Velocity Meter

This meter measures velocity and temperature, calculates flow rate, performs multi-value averaging, and determines minimum and maximum readings. Prior to use, this instrument shall have a current annual calibration sticker and appear to be functioning properly.

5.2 TSI VelociCalc® Plus Multi-Parameter Ventilation Meter

This meter simultaneously measures and data logs several ventilation parameters using a single probe with multiple sensors. The ventilation meter measures temperature, humidity, and pressure. The meter also features automatic calculation of flow rate and automatic conversion between actual and standard velocity readings. Prior to use, this instrument shall have a current annual calibration sticker and appear to be functioning properly.

5.3 Additional Equipment

- Smoke tube kit that generates vapor/fume for visualizing flow of LEV systems
- Vinyl tag holders and miscellaneous administrative supplies

- Tape measure and miscellaneous tools (adjustable wrench, screwdriver)

6.0 RESPONSIBILITIES

6.1 Industrial Hygiene Personnel

Personnel performing industrial hygiene functions within GRC's Safety and Health Division (SHeD) are responsible for being familiar with and implementing this work instruction.

7.0 PERSONNEL TRAINING AND/OR CERTIFICATION

- Industrial hygiene personnel who perform local exhaust ventilation system surveys should have received the necessary training associated with entering most areas at the Center.
- Industrial hygiene personnel who perform local exhaust ventilation system surveys should have a general understanding of ventilation systems and flow parameter calculations.
- Industrial hygiene personnel who perform local exhaust ventilation system surveys should know how to operate survey equipment and be familiar with the equipment manuals.

8.0 INSTRUCTIONS

8.1 Administrative and Data Management Functions

8.1.1 Database

An Access database is used to track local exhaust ventilation systems at GRC. Information in this database includes a unique identifying number for the LEV system, point of contact, type of system, operating parameters (i.e., flow specifications), face or capture velocity (or observed reading), distance from face, and comments. In addition, images are being added to the database to aid in identifying each system and where and how the flow measurements should be secured. Standard database functions are used to sort, query, and, otherwise, manage the LEV system information. It is important that IH personnel actively maintain this data resource to reflect changes in system information or the performance of periodic surveys.

The fields "operating parameter" and "comments" should be used to provide specific instruction on how and where the flow parameter should be measured, what the requirement is, and, if needed, a description of how this flow requirement was determined.

8.1.2 Naming Convention

LEV systems are uniquely identified using the following convention:

Building No. – Room/Cell No. – Hood No.

Examples: 302 – 219 – 5

005 – CW5 – 2

Hoods are numbered sequentially, with there being no significance or priority associated with the actual number. When a new LEV system is added to a room, it receives the next available unused number. Numbers for systems that have been removed from a room or cell are decommissioned with the system and are not reused.

8.2 Establishing Required Flow Parameters

8.2.1 General Discussion

Velocity and/or flow requirements for some LEV system types can come straight from OSHA regulations or directly out of industry guidelines, such as the ACGIH manual *Industrial Ventilation, A Manual of Recommended Practice for Design*, hereinafter identified as the "Ventilation Manual." The manufacturer of the equipment being ventilated by the LEV system may also provide a specification for process exhaust performance. Establishing flow requirements for many other systems will depend upon assessing the LEV application along with its target activity using guidance provided in relevant ventilation references.

Although not an exhaustive list, the following guidance is intended to address most of the LEV system types found at GRC. Other LEV applications might require a bit of researching and the application of general principles to establish its flow requirements. In addition, changes to prescribed flow parameters might be allowable to address unusual LEV needs.

Once established, the flow requirements for an LEV system along with supporting information shall be recorded in the database operating parameter field and the comments field, respectively.

8.2.2 Laboratory Fume Hood

The average face velocity of nine readings (3×3) taken over the laboratory hood opening should range between 80 and 120 fpm, with a target value of 100 fpm.

If the LEV system is a continuous-flow laboratory fume hood, the hood shall provide a face velocity of 100 ft/min (fpm) ±20 percent. If the LEV system is not a continuous-flow laboratory fume hood, then the sash shall be adjusted such that the hood provides a face velocity of 100 fpm ±20 percent. The sash height shall be marked on the survey tag or on the hood itself to clearly indicate the required sash height. Hoods that are equipped with airflow monitoring gauges must indicate the tested velocity flow within ±10 percent. If not, a WR must be submitted to address the discrepancy.

Newly purchased laboratory fume hoods shall include a continuous face velocity monitor for the purpose of measuring hood performance. Each monitor shall be calibrated annually.

Laboratory hoods should not be used for general chemical storage. Keep materials stored in hoods to a minimum and do not allow them to block vents or airflow.

Refer to the Ventilation Manual pages 6-3>16, 13-47>52 and figures VS-35-01>04 for further details on laboratory fume hood design (Appendix C).

Note: Laboratory fume hoods and paint spray booths are not created equal. A paint spray booth is a specifically designed enclosure for the control of paint vapors and particulate overspray, equipped with air filtration to contain emissions and protect against combustible paint film buildup in ductwork, and includes fire suppression. Often, laboratory fume hoods do not meet this criteria. Air flow recommendations for paint booths also vary. Refer to Ventilation Manual figures VS-75-01>02 for further details (Appendix C).

8.2.3 Biological Safety Cabinets

Biological safety cabinets require annual recertification according to National Science Foundation (NSF) American National Standards Institute (ANSI) International Standard Number 49 for downflow, inflow, flowpattern, and system leakage integrity. This procedure shall be accomplished by an NSF Accredited Class II Biosafety Cabinet Certifier. Please refer to the Industrial Ventilation Manual figures VS-35-1- and VS-35-11 for further details on cabinet design considerations (Appendix C) and for complete biosafety considerations in "Biosafety in Microbiological and Biomedical Laboratories (BMBL) 5th Edition, HHS Publication No. (CDC) 21-1112, 2009.

8.2.4 Snorkel-Type Hood (Articulated Arm)

The flow requirement for this system will depend on the characteristics of the contaminant and the distance from the point of contaminant generation to the hood opening. Typically, the hood shall be as close to this point as possible without interfering with the work task or otherwise creating another safety hazard. The flow specification can be either a capture velocity at a specified distance from the hood to reflect the work scenario or a face velocity at the hood or duct to correspond to this needed capture velocity. Note that the face velocity required to achieve a specific capture velocity at some distance X increases very rapidly as the distance X gets larger. Please refer to Ventilation Manual pages 6-18>24, 13-103>104, and 13-165>168 and figures VS-65-01 and VS-90-02 for further details (Appendix C).

Example Welding Operation

LEV uses a 6-in.-diameter flexible duct, and the hood expands to a diameter of 12". . The welding operation is 9 in. from the face of the hood.

Assume a required capture velocity Q of 150 fpm for welding low-toxicity materials in moderately still air (Ventilation Manual, VS–90–2, 2010).

$Q = 150\ C_f\,(10X^2 + A)$ (Ventilation Manual, VS–90–2, 2010), where $C_f = 0.75$ for tapered duct, X = distance from hood to capture point, A = cross-sectional area of hood opening

$Q = 150 \text{ fpm} \times 0.75 \times [10 \times (9/12)^2 \text{ ft}^2 + 0.7854 \text{ ft}^2] = 721 \text{ ft}^3/\text{min (cfm)}$

Note that the area A of an 12" circle is 0.7854 square feet.

The corresponding hood face velocity $V = Q/A = (721 \text{ cfm})/(0.7854 \text{ ft}^2) = 918$ fpm

The corresponding duct face velocity $V = (721 \text{ cfm})/(0.2 \text{ ft}^2) = 3605$ fpm

This example shows three possible velocity measurements that could be made to check the performance of such an LEV system: capture velocity = 150 fpm (minimum), hood face velocity = 918 fpm, and duct face velocity = 3605 fpm. [only pertains to a specified capture velocity of 150 fpm and a hood location 9" from the point of fume generation, with a 12" hood and 6" duct opening]

8.2.5 Canopy Hood

Flow requirements depend not only on the characteristic of the contaminant generated and the distance to the hood but on the type of canopy hood (open sides = 4, 3, 2, or 1). Because of this openness, their size, and the distance to the target activity, canopy hoods are not very efficient means of contaminant removal. Consequently, significant flow may be necessary to properly remove the emission from the work environment. Canopy hoods shall provide a capture velocity based on source toxicity, distance from contaminant source, temperature of process and cross drafts. Refer to Ventilation Manual pages 6-18>20, 13-35>40, and 13-110>113, and figure VS-99-03 for further details (Appendix C).

Example Canopy Hood Operation

The canopy hood is above an oven where hot emissions are released in an environment of relatively still air. The oven has a foot print of 2 by 2 ft. The canopy profile is 3 by 3 ft; the hood is open on all four sides, and the bottom of the canopy is 1 ft above the top of the oven. The canopy hood is attached to 8-in.-diameter ductwork.

Assume a required capture velocity Q of 75 fpm for hot effluent into quiet air (Ventilation Manual, Table 6–2).

$Q = 1.4\ PHV$ (Ventilation Manual, VS–99–3, 2010), where P = emission source (oven) perimeter, H = distance from bottom of canopy to target zone

$Q = 1.4 \times (8 \text{ ft}) \times (1 \text{ ft}) \times (75 \text{ ft/min}) = 840$ cfm

The corresponding **hood** face velocity V = (840 cfm)/(9ft2) = 93 fpm

The corresponding **duct** face velocity $V = (840 \text{ cfm})/(0.349) \text{ ft}^2) = 2406$ fpm

Three choices for velocity measurements can be made to check the performance of such an LEV system: capture velocity = 75 fpm (minimum), hood face velocity of 93 fpm, and duct face velocity = 2406 fpm.

8.2.6 Cabinet

The flow requirements for a cabinet-style LEV system are logically somewhat lower than an those for an open-type LEV hood because the target volume is enclosed on all sides. A capture velocity can be selected from Table 6-2 of the Ventilation Manual (See Appendix C) and the calculations made to determine the corresponding duct face velocity (cabinet outlet) or filter/slot panel velocity (cabinet inlet).

Example Cabinet Operation

A ventilated cabinet houses an activity involving a high-intensity ultraviolet xenon lamp; ozone (O_3) production is expected. The cabinet width and depth are both 2 ft. The cabinet has a 4-in.-diameter exhaust at the top on its back panel and a 6- by 12-in. filtered inlet near the bottom of the front panel.

Assume a required capture velocity of 25 fpm for the emission of a gas in a quiet, enclosed cabinet.

$Q = VA$

$Q = (25 \text{ fpm}) \times (2 \text{ ft}) \times (2 \text{ ft}) = 100$ cfm

The corresponding duct face velocity $V = (100 \text{ cfm})/(0.09 \text{ ft}^2) = 1150$ ft/min

The corresponding filter inlet face velocity, $V = (100 \text{ cfm})/(0.5 \text{ ft}^2) = 200$ ft/min

Depending upon accessibility, there may be up to three choices for making a measurement to check the performance of this system; the least intrusive would be a measurement of the inlet filter face velocity, which has a minimum specification of 200 fpm.

8.2.7 Sander/Grinder

The particles generated in these mechanical abrasion operations are relatively large and require high capture and duct velocities to grab the contaminant and keep it suspended during transport. Table 6-2 of the ventilation manual specified a minimum capture velocity of 500 to 2000 fpm for contaminants released at a high initial velocity into a zone of very rapid air motion (e.g., grinding). Other flow requirements for a sanding/grinding operation are specified based upon the type of operation and the size of the abrading media. Typical operation types include wheel, belt, and disk with pertinent dimensions being wheel width, belt width, and disk diameter. These flow requirements are specified as minimum exhaust flow rates in cubic feet per minute. Assigning a flow requirement for a particular system will depend upon how best to make a relevant and meaningful measurement.8.2.8 Engineered Nanomaterials

Ventilation Requirements for Engineered Nanomaterials are covered in Section 13.67 of the Industrial Ventilation manual (See Appendix C). Nanoparticles have unknown human health effects due to unique chemical and physical properties including particle size, shape, surface area, charge, chemical properties, solubility, oxidant generation potential, and degree of agglomeration.

8.2.9 Other

In general, establishing a capture velocity parameter for an LEV system based upon the operation being ventilated is the best approach for evaluating the effectiveness and performance of such a system. Ranges of capture velocities for many applications can be found in references such as the Ventilation Manual, but often a decision must be made to establish a flow requirement not covered by such a reference. In some cases, experience and professional judgment may be adequate to establish a minimum capture velocity. In other cases, personal exposure monitoring may be necessary to assess the adequacy of an LEV system.

8.3 Performing LEV System Surveys

8.3.1 General Discussion

Prior to performing LEV system assessments, the surveyor should ensure that the instrument is calibrated and appears to functioning properly. The surveyor should also verify that the subject LEV system is operating and make note of any pertinent valve/damper positions and other conditions of the mechanical ventilation system. Inspect the exhaust system and its associated ductwork and mechanical components for any obvious signs of damage or other problems. (e.g., clogged ductwork or intake, breached ductwork, broken dampers, missing or damaged seals, unusually loud motor noises or oscillations). Do not test the LEV system if it is not operable or is of questionable integrity. Raise concerns about the system with the system point of contact and/or facility personnel.

The surveyor should record as much information about the testing scenario as is necessary to properly document the LEV system's compliance with performance specifications and to allow for reproducible measurements to be taken in the future. This information shall include distances from duct faces where capture velocity measurements were taken, damper positions (when applicable), the type of contaminant generated, pertinent dimensions of the system/layout, assumptions made that impacted testing, and so forth.

Although the purpose of the LEV surveys is to verify proper operation of the process exhaust system, the tools and methods being used can also be used to optimize systems or work scenarios that do not meet their flow specifications. Tracing smoke and measuring flow velocities can be used to identify the boundaries of an appropriate work zone for an LEV system or identify items that adversely impact the performance of such a system.

8.3.2 Use of Smoke Tubes

The vapor and/or fume generated by a smoke tube provides a convenient method for visualizing airflow. The value of this tool in assessing the performance of an LEV system is somewhat limited because of the subjective nature of the method and its result. Its use can be considered for a qualitative assessment of systems where flow adequacy is easily achieved and other flow parameters are difficult to measure. One example could be a toxic material storage cabinet whose exhaust is intended to remove contaminants resulting from a small leak. In this instance, the smoke can be used (1) near the door while slightly cracking the door open or (2) near an intake panel, if present. Another

use would be an enclosed bead/sand blasting unit where the smoke could be used to check the integrity of enclosure seals or to determine if the exhaust system is adequately drawing or sucking on the box to keep this work volume negative in pressure relative to where the blaster operators are located.

8.3.3 Use of the Thermal Anemometer Probe [Do not use in explosive, flammable or combustible atmospheres]

The TSI VelociCalc® and VelociCalc® Plus survey instruments both include a thermal anemometer probe as their primary means of flow velocity measurement. The probes include a telescoping, articulated rod that allows the user to make measurements at a distance and with the probe's hot wire at varying angles and orientations. The end of the probe should be placed in the two-dimensional plane of the opening being measured. In addition, the probe should be oriented to achieve the maximum flow of air over the hot wire (see figures below). The observed flow rate will decrease rapidly as the probe is rotated out of this maximum flow scenario. The probe has a direction of flow marking (a dot) on the tip that shall be oriented upstream. With exhaust systems, this means the dot will be visible to the operator when taking measurements.

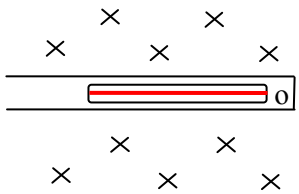

Flow is into the page

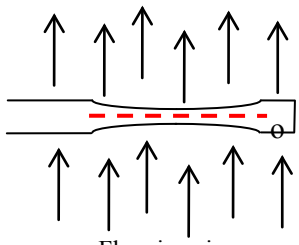

Flow is going up the page

In addition to facilitate making measurements out of one's normal reach, the probe's extendable, telescoping wand enables readings to be performed away from the instrument operator, thereby reducing the flow interference effects caused by the operator's body.

8.3.4 Use of Pitot-Tube Probe—Reserved. Ventilation Manual Appendix C - Testing and Measurement of Ventilation Systems

8.3.5 Laboratory Hood Surveys

Nine velocity measurements, arranged in a three-by-three (3×3) grid over the hood face, should be taken when surveying a laboratory ventilation hood. Visualize the following when performing a laboratory hood survey and make velocity measurements at the center of each of the nine rectangles.

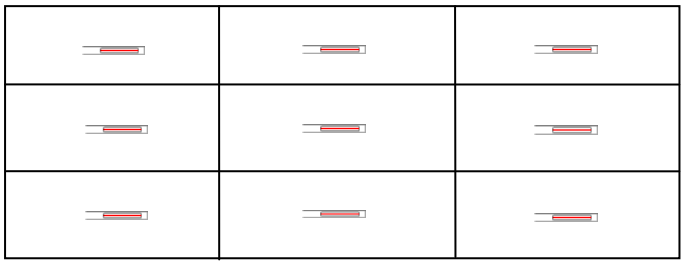

The VelociCalc® meters will average the results for the operator. Particular attention should be paid to keeping the probe hot-wire opening perpendicular to the airflow and using the telescoping feature of the wand to stay as far away from the measurement zone as possible. The height of the vertical sash should be adjusted to get the average flow velocity to be approximately 100 fpm. The acceptable range is 80 to 120 fpm

8.3.6 Obtaining a Face Velocity Measurement for a Duct or Hood Opening

Opening size and shape, location, orientation, obstructions, and accessibility all have bearing on how one can assess the face velocity of the opening. Many times a single centerline flow velocity measurement is adequate (e.g., small round duct face) or is all that can be readily obtained. However, this centerline flow velocity will overestimate the actual duct velocity and should be multiplied by 0.9 to estimate the average flow velocity of the duct. Larger and more accessible hood faces allow for more measurements to be made and then averaged. More measurements typically yield more accurate results; however, the above-mentioned considerations as well as the safety of the surveyor should be taken into account. Here are two examples.

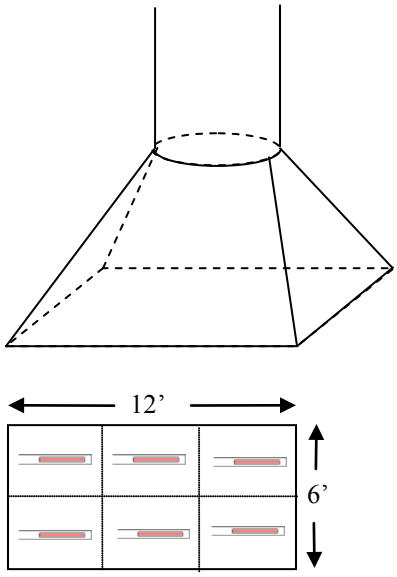

For a rectangular hood, imagine it is broken up into a grid (2×2, 3×2, 3×3, or whatever seems appropriate for the size and shape of the rectangle). Then average the readings taken in each of the grids to obtain the face velocity for that hood. The hood shown was broken down into a 3×2 grid.

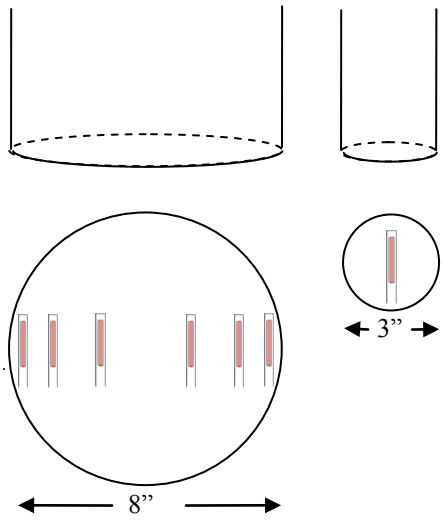

For a round opening, single or multiple measurements can be taken. The larger duct example identifies six measurements being taken with positions comparable to those found in references for performing a 6-point traverse. Each pair of measurement locations (1,6; 2,5 and 3,4) represent measurements within three equal-area donut-shaped disks within the duct. The average of the six readings represents the average duct face velocity. The smaller round opening has dimensions approaching that of the hot-wire probe itself, making it difficult to take multiple measurements. So a single measurement is taken and corrected with the 0.9 multiplication factor.

Again, particular attention should be paid to keeping the probe hot-wire opening perpendicular to the airflow and using the telescoping and feature of the wand to stay as far away from the measurement zone as possible.

8.3.7 Obtaining a Capture Velocity Measurement

When possible, a capture velocity reading is the best measure of the effectiveness of an LEV system because the surveyor is observing the flow effects experienced by the contaminant itself. Often, however, such measurements are difficult to make because of limited accessibility (enclosures, obstructions), requiring that some other surrogate measurement (e.g., duct face velocity) be made. When using the thermal anemometer to make these measurements, the probe's articulating and telescoping features should be utilized to keep the hot-wire opening (1) perpendicular to the airflow and (2) away from interference created by the surveyor.

8.4 LEV System Results: Tags and Documentation

8.4.1 General Discussion

The documentation of LEV survey results involves displaying results locally at the LEV system and recording the results in the LEV database. Both modes play an important role in ensuring the health of workers relying on such engineering controls. Local postings describe whether the system is functioning properly, if there are restrictions on its use (e.g., maximum sash height of a lab hood or maximum effective range of a snorkel hood), or if there are requirements to be met prior to using the system for worker protection.

8.4.2 Recording Results Locally at LEV system

A system of multicolor tags will be used to document survey results in the field. These tags will replace the fluorescent orange "Survey" tags and red "Do Not Use" postings being used as of May 2007. In most instances, the colored tags will fit into vinyl sleeves that will be placed (using Velcro® or other adhesion method) on the LEV system to allow conspicuous viewing of the colored tags. For LEV systems where this is not possible, a brass grommet is to be added to the vinyl sleeve that will then be hung at the LEV system, again in a location to allow conspicuous viewing of the tag. In addition, sash-height labels will be placed on the side of laboratory fume hoods to identify the required position at the bottom of the sliding vertical sash.

8.4.2.1 Green LEV Survey Tag

The green "Local Exhaust Ventilation (LEV) Survey Tag" shown in Attachment A is to be used when survey results satisfy the system flow requirements. Tags are filled in to identify the system, document the survey results, and list any restrictions associated with the LEV system use. An example of a use restriction would be specifying a maximum effective range of 8 in. for a flexible snorkel being used for welding activities.

8.4.2.2 Yellow LEV Warning Notice Tag

The yellow "Local Exhaust Ventilation (LEV) Warning Notice Tag" shown in Attachment B is to be used when there is inadequate information to verify the efficacy of the system. The hood ID and any other relevant comments are to be included on the tag. For example, a canopy hood or duct drop is positioned over an area that has no source of contaminant emission. Without knowing the emission characteristics and distances involved, it would not be possible to adequately assess the adequacy of such an LEV system.

8.4.2.3 Red LEV Out of Service Notice Tag

The red "Local Exhaust Ventilation (LEV) Out of Service Notice Tag" shown in Attachment C is to be used when survey results do not satisfy the system flow requirements. The hood ID and any other relevant comments are to be included on the tag. After placing a red out of service (OOS) notice on a system, the surveyor shall contact the LEV system point of contact or local facility personnel to discuss the deficiency. When needed, an industrial hygienist shall be contacted to evaluate the LEV system with input from the user, facility, and maintenance personnel.

8.4.3 Updating Access Database

The LEV system database allows for storage of system information, testing requirements, and survey results. Typical database features such as sorting, querying, and report generating allow for convenient data manipulation and display. Following an LEV system survey, the fields within the unique record for that particular system are to be updated to reflect the survey results, date, surveyor, and if not already identified, the survey conditions and specific flow requirements and any relevant assumptions in establishing the criteria.

Attachment A.—C–760a LOCAL EXHAUST VENTILATION (LEV) SURVEY TAG

LOCAL EXHAUST VENTILATION (LEV) SURVEY TAG

HOOD I.D. _____

- ☐ **100 fpm (average) face velocity for lab hood**
- ☐ **_____ fpm minimum capture velocity**
- ☐ **Airflow check is OK using smoke (tracer)**

_____ fpm capture velocity measure at ___ in. from fume hood/duct face

_____ fpm capture velocity measured in contaminant generation zone

Safety, Health & Environmental Division

PHONE#: _____

SURVEY BY: _____

EXPIRATION DATE: _____

cfm = cubic feet per minute
fpm = feet per minute

NASA C-760a (11/2009)

Attachment B.—C–760b LOCAL EXHAUST VENTILATION (LEV) WARNING NOTICE TAG

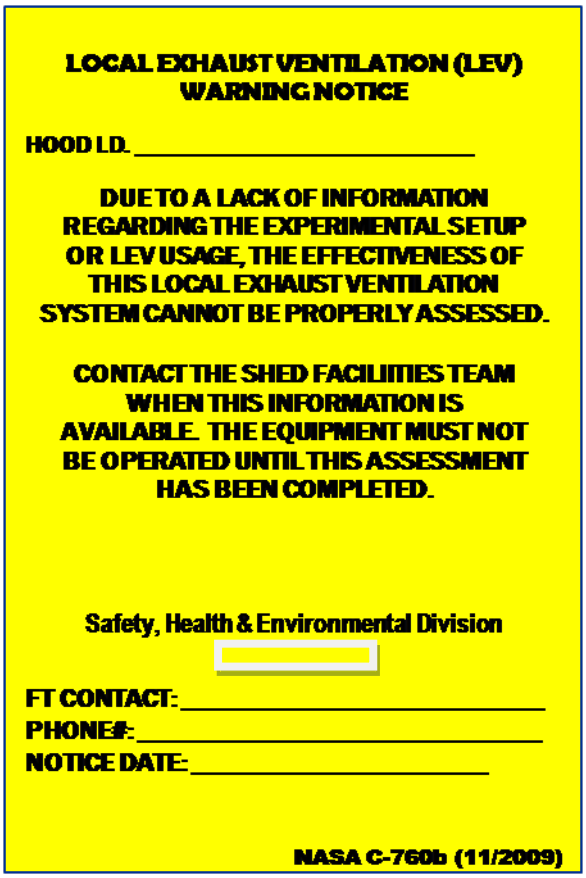

LOCAL EXHAUST VENTILATION (LEV)
WARNING NOTICE

HOOD I.D. _____

DUE TO A LACK OF INFORMATION REGARDING THE EXPERIMENTAL SETUP OR LEV USAGE, THE EFFECTIVENESS OF THIS LOCAL EXHAUST VENTILATION SYSTEM CANNOT BE PROPERLY ASSESSED.

CONTACT THE SHED FACILITIES TEAM WHEN THIS INFORMATION IS AVAILABLE. THE EQUIPMENT MUST NOT BE OPERATED UNTIL THIS ASSESSMENT HAS BEEN COMPLETED.

Safety, Health & Environmental Division

FT CONTACT: _____
PHONE#: _____
NOTICE DATE: _____

NASA C-760b (11/2009)

Attachment C.—C–760c LOCAL EXHAUST VENTILATION (LEV) OUT OF SERVICE NOTICE TAG

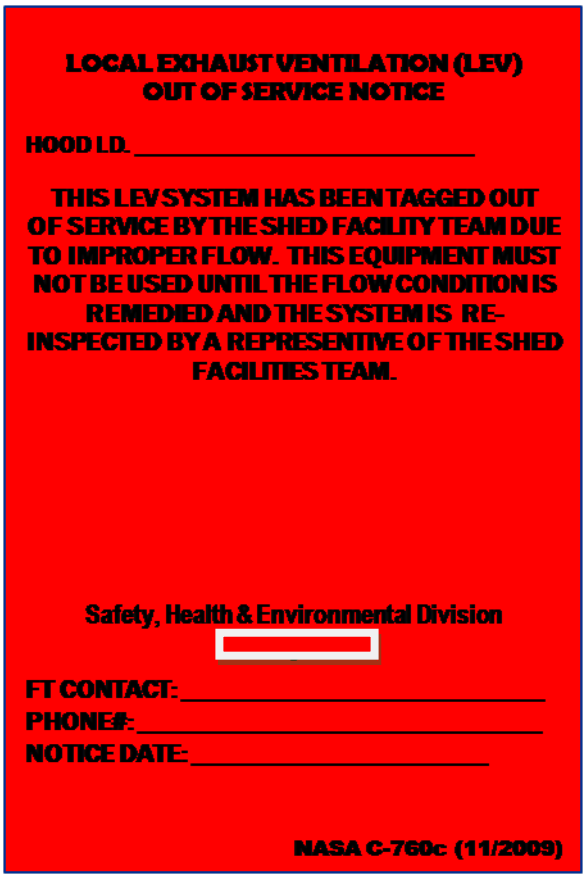

LOCAL EXHAUST VENTILATION (LEV)
OUT OF SERVICE NOTICE

HOOD I.D. _____

THIS LEV SYSTEM HAS BEEN TAGGED OUT OF SERVICE BY THE SHED FACILITY TEAM DUE TO IMPROPER FLOW. THIS EQUIPMENT MUST NOT BE USED UNTIL THE FLOW CONDITION IS REMEDIED AND THE SYSTEM IS RE-INSPECTED BY A REPRESENTIVE OF THE SHED FACILITIES TEAM.

Safety, Health & Environmental Division

FT CONTACT: _____
PHONE#: _____
NOTICE DATE: _____

NASA C-760c (11/2009)

APPENDIX C.—INDUSTRIAL VENTILATION: A MANUAL OF RECOMMENDED PRACTICE FOR DESIGN, 27th EDITION FIGURES:

TITLE	FIGURE/TABLE/SECTION
Laboratory Hood	VS-35-01
Biological Safety Cabinet, Type A	VS-35-10
Biological Safety Cabinet, Type B	VS-35-11
Movable Exhaust Hoods	VS-65-01
Large Paint Booth	VS-75-01
Small Paint Booth	VS-75-02
Capturing Hood for Low Toxicity Welding	VS-90-02
Canopy Hood	VS-99-03
Area and Circumferences of Circles	Table 5-8
Recommended Capture Velocities	Table 6-2
Ventilation Requirements for Engineered Nanomaterials	Section 13.67

Laboratory Hood VS-35-01

FIGURE VS-35-01

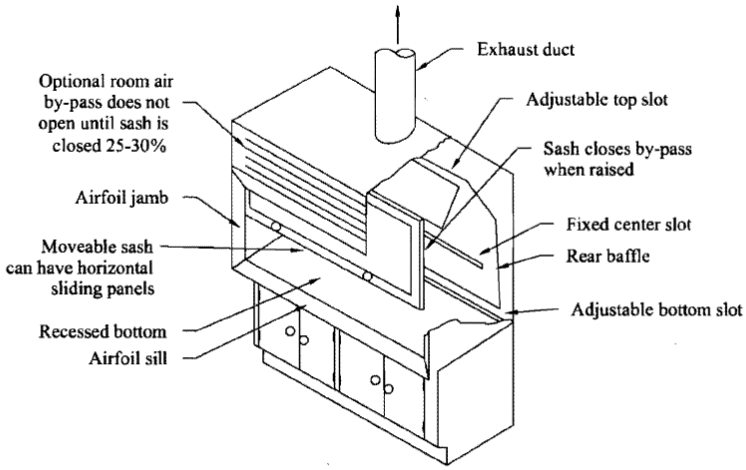

VERTICAL SASH AIRFOIL HOOD

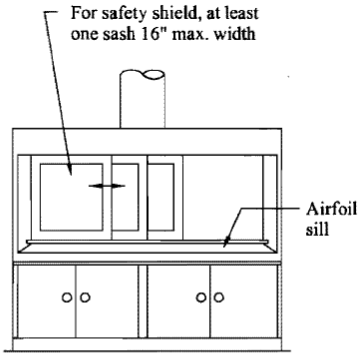

HORIZONTAL SASH AIRFOIL HOOD

Q = 80-100 acfm/ft^2 full open area depending on quality of supply air distribution and uniformity of face velocity

h_e = 0.5 VP_d

Duct velocity = 1000-2000 fpm to suit conditions

Design specifications:

General use laboratory hoods – See VS-35-02

Perchloric acid – See VS-35-03

"Auxiliary Air" or "Compensating" hoods furnish some replacement air at hood face, design varies with vendor.

Work practices – See VS-35-04

	TITLE	FIGURE
ACGIH®	TYPICAL LABORATORY HOOD	VS-35-01
		DATE 1-10

CHECK CODES, REGULATIONS, AND LAWS (LOCAL, STATE, AND NATIONAL) TO ENSURE THAT DESIGN IS COMPLIANT.

Biological Safety Cabinet, Type A VS-35-10

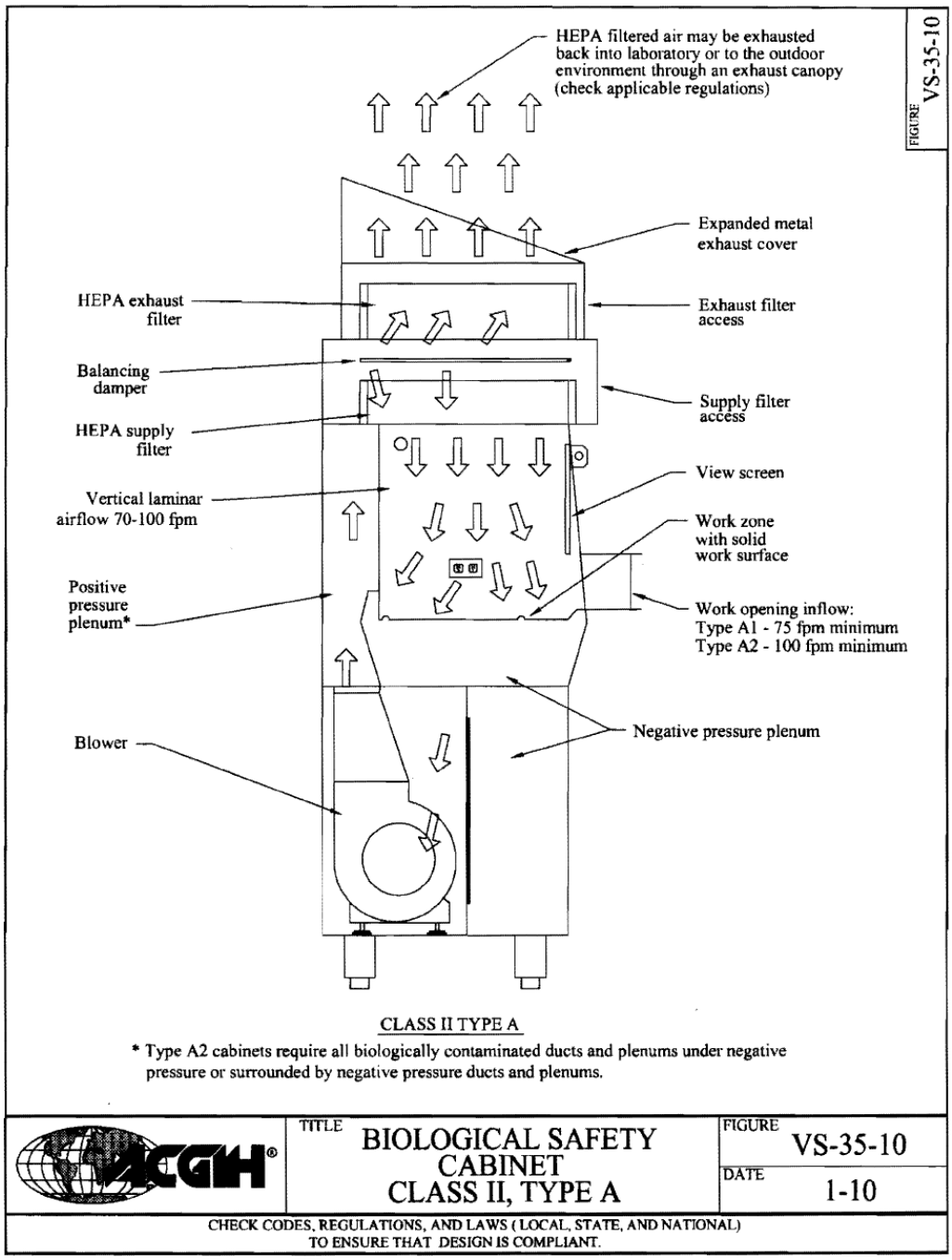

Biological Safety Cabinet, Type B VS-35-11

FIGURE VS-35-11

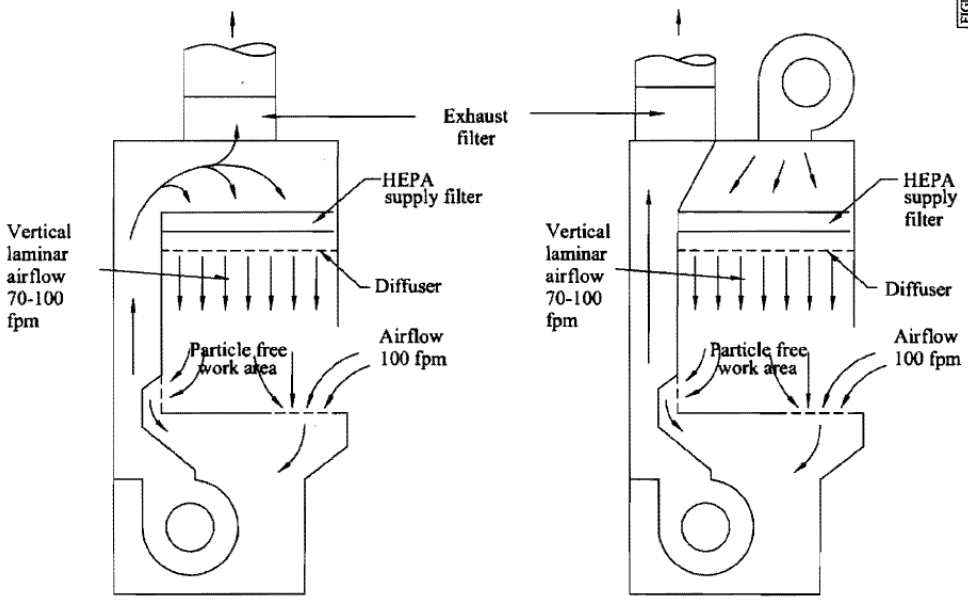

RECIRCULATING AIR HOOD *
TYPE B1

100% EXHAUST AIR HOOD
TYPE B2

* Recirculating Air Hoods are not recommended for use with gases or vapors.

Note: See "National Sanitation Foundation Standard 49" (13.35.4) for requirements and definitions of types and classes.

For product protection only, see VS-35-30 and VS-35-31.

All Type B cabinets require biologically contaminated ducts and plenums to be under negative pressure or surrounded by negative pressure ducts and plenums.

	TITLE	FIGURE
ACGIH®	BIOLOGICAL SAFETY CABINET CLASS II, TYPE B	VS-35-11
		DATE 1-10

CHECK CODES, REGULATIONS, AND LAWS (LOCAL, STATE, AND NATIONAL) TO ENSURE THAT DESIGN IS COMPLIANT.

Movable Exhaust Hoods VS-65-01

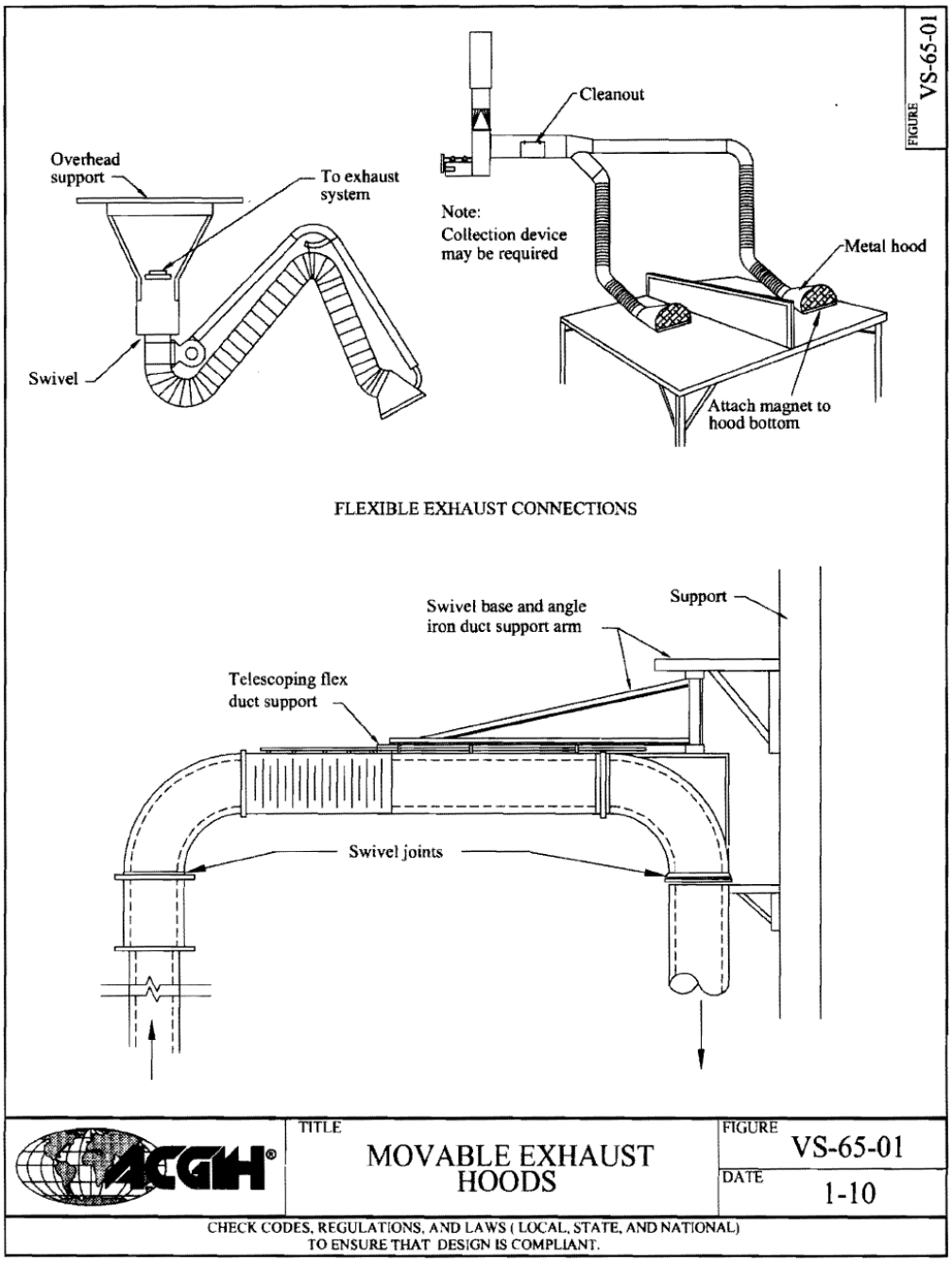

Large Paint Booth VS-75-01

FIGURE VS-75-01

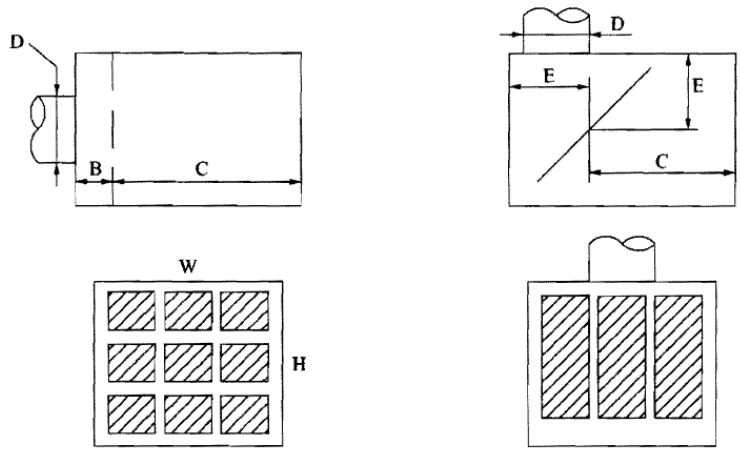

1. Split baffle or filters
B = 0.75 D
Baffle area = 0.75 WH
For filter area, see Note 2

2. Angular baffle
E = D + 6"
Baffle area = 0.40 WH
For filter area, see Note 2

Air spray paint design data.

Any combination of duct connections and baffles may be used. Large, deep booths do not require baffles. Consult manufacturers for water-curtain designs. Use explosion proof fixtures and a non-sparking fan. Electrostatic spray booth requires automatic high-voltage disconnects for conveyor failure, fan failure or grounding.

Walk-in booth
W = work size + 6'
H = work size + 3' (minimum = 7')
C = work size + 6'
Q = 100 acfm/ft^2 booth cross-section
May be 75 acfm/ft^2 for very large, deep booth. Operator may require a NIOSH cerified respirator.
$h_e = 1.78\ VP_s + 0.50\ VP_d$ (baffles)
h_e = Dirty filter resistance + 0.50 VP_d (filters)
Duct velocity = 2000 fpm

Operator outside booth
W = work size + 2'
H = work size + 2'
C = 0.75 × larger front dimension
Q = 100 - 150 acfm/ft^2 of open area, including conveyor openings.

Airless electrostatic and HVLP spray paint design

Q = 60 acfm/ft^2 booth cross-section, walk-in booth

Q = 60 - 100 acfm/ft^2 of total open area, operator outside of booth

Notes :
1. Baffle arrangements shown are for air distribution only.
2. Paint arresting filters usually selected for 100 - 500 fpm, consult manufacturer for specific details.
3. For construction and safety, consult NFPA.[13.75.3]

	TITLE	FIGURE
ACGIH®	LARGE PAINT BOOTH	VS-75-01
		DATE 1-10

CHECK CODES, REGULATIONS, AND LAWS (LOCAL, STATE, AND NATIONAL) TO ENSURE THAT DESIGN IS COMPLIANT.

Small Paint Booth VS-75-02

FIGURE VS-75-02

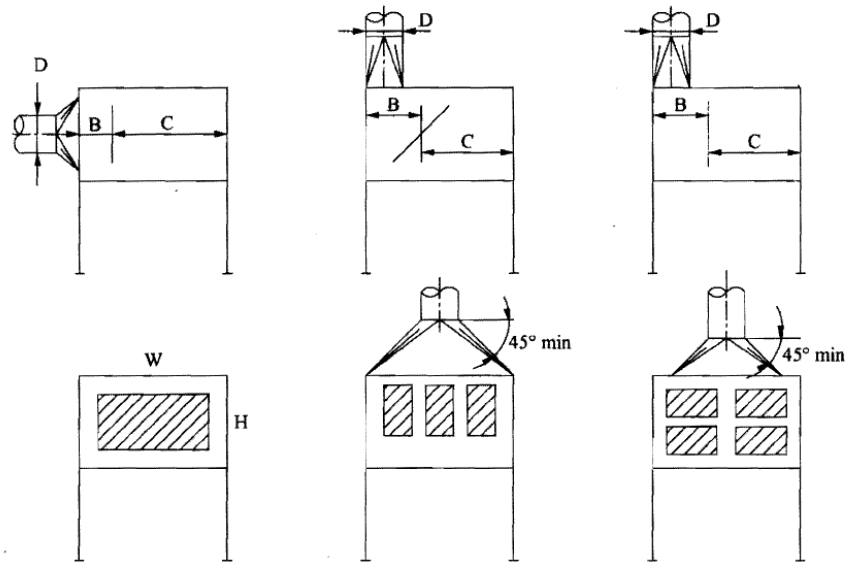

1. Solid baffle
   B = 0.75 D
   Baffle area = 0.60 WH

2. Angular baffle
   B = D + 6"
   Baffle area = 0.60 WH

3. Split baffle or filters
   B = D + 6"
   Baffle area = 0.75 WH

Air spray design data

Any combination of branch ducts and baffles may be used.
W = work size + 12"
H = work size + 12"
C = 0.75 W or H, whichever is larger
Q = 200 acfm/ft^2(200 WH) - for face area up to 4 ft^2
= 150 acfm/ft^2 - for face area over 4 ft^2
h_e= 1.78 VP_s + 0.25 VP_d (baffles)
= dirty filter resistance + 0.25 VP_d (filters)
Duct velocity = 2000 fpm

Airless spray paint design data

Q = 125 acfm/ft^2(125 WH) - for face area up to 4 ft^2
Q = 100 acfm/ft^2 - for face area over 4 ft^2

Notes:
1. Baffle arrangements shown are for air distribution only.
2. Paint arresting filters usually selected for 100 - 500 fpm, consult manufacturer for specific details.
3. For construction and safety, consult NFPA.[13.75.3]

	TITLE	FIGURE
ACGIH®	SMALL PAINT BOOTH	VS-75-02
		DATE 1-10

CHECK CODES, REGULATIONS, AND LAWS (LOCAL, STATE, AND NATIONAL) TO ENSURE THAT DESIGN IS COMPLIANT.

Capturing Hood for Low Toxicity Welding VS-90-02

FIGURE VS-90-02

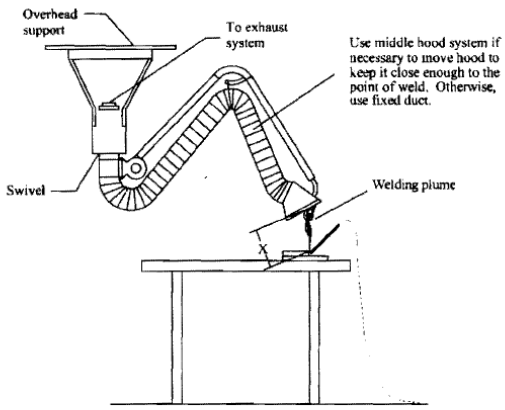

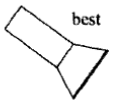

Conical or 45-degree tapered, rectangular hood.

Flanged duct opening as a hood

Plain duct opening as a hood

APPLICATION OF MOVEABLE CAPTURING HOODS

1. Not suitable for confined spaces unless coupled with appropriate use of respiratory protection and copious dilution ventilation with good mixing.

2. Not suitable for highly hazardous contaminants (use enclosing hood instead).

3. The distance of the center of the hood face to the weld (X) is critical. The welder must be diligent in keeping the hood close to the weld for these hoods to be effective.

RECOMMENDED EXHAUST RATES (Q_t) AND DETERMINATION OF HOOD DIMENSIONS

$Q_t = 125\ C_f\ (10x^2 + \text{Area}_{face})$ acfm

C_f = 0.75 for flanged or tapered
C_f = 1.0 for plain duct

X, inches	Plain duct acfm	Flange or cone, acfm
6"	380	280
9"	770	580
12"	1350	1000

1. Q_t values above assume that the hood is elevated above the welding source to account for the rising plume. If the hood is level with the source, Q_t must be much higher.

2. Q_t values above are based on low toxicity welding. For moderate toxicity welding, increasing airflows by 20-50% (see also VS-90-01) may be sufficient. For still higher toxicity welding, an enclosing hood (VS-90-30) and respiratory protection may be necessary.

3. Velocities above 150 fpm at the point of the weld may disturb shield gas.

4. The greater the width of the hood the less the hood must be moved left to right, which is often awkward. The hood width should be greater than the distance, X, from the face of the hood to the source.

5. The velocity gradient becomes extreme for X-distances less than 10". It is best to design for X greater than 16".

DUCT SIZE SELECTION AND COMPUTATION OF SP_h

1. Minimum design velocity for ducts should be about 2,500 - 3,000 fpm.

2. The hood static pressure is computed from the entry loss coefficient (F_h) and the duct velocity pressure (VP):

$$SP_h = (1 + F_h)VP$$

Hood	F_h
Plain duct	0.93
Flanged duct	0.50
Conical	0.15
45-rectangular	0.25

TITLE
CAPTURING HOOD FOR LOW TOXICITY WELDING

FIGURE VS-90-02

DATE 1-10

CHECK CODES, REGULATIONS, AND LAWS (LOCAL, STATE, AND NATIONAL) TO ENSURE THAT DESIGN IS COMPLIANT.

Canopy Hood VS-99-03

FIGURE VS-99-03

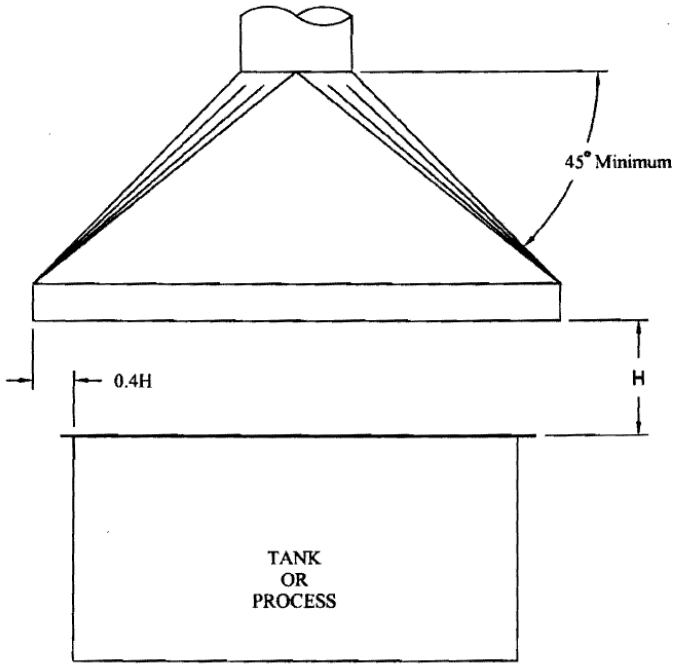

Not to be used where material is toxic and worker must bend over tank or process.
Side curtains are necessary when cross-drafts are present.

Q = 1.4PHV acfm	for open type canopy P = perimeter of tank, feet V = 50-500 fpm. See Chapter 3
Q = (W + L)HV acfm	for two sides adjacent enclosed W and L are open sides of hood V = 50-500 fpm. See Chapter 3
Q = WHV acfm or LHV acfm	for three sides enclosed (booth) V = 50-500 fpm. See Chapter 3

$h_e = 0.25\ VP_d$
Duct velocity = 1000-3000 fpm

TITLE	FIGURE
CANOPY HOOD	VS-99-03
	DATE 1-10

CHECK CODES, REGULATIONS, AND LAWS (LOCAL, STATE, AND NATIONAL) TO ENSURE THAT DESIGN IS COMPLIANT.

Area and Circumferences of Circles Table 5-8

TABLE 5-8. Area and Circumference of Circles

Dia. In Inches	AREA Square Inches	AREA Square Feet	CIRCUMFERENCE Inches	CIRCUMFERENCE Feet	Dia. In Inches	AREA Square Inches	AREA Square Feet	CIRCUMFERENCE Inches	CIRCUMFERENCE Feet
1	0.79	0.0055	3.14	0.2618	30	706.9	4.909	94.2	7.854
1.5	1.77	0.0123	4.71	0.3927	31	754.8	5.241	97.4	8.116
2	3.14	0.0218	6.28	0.5236	32	804.2	5.585	100.5	8.378
2.5	4.91	0.0341	7.85	0.6545	33	855.3	5.940	103.7	8.639
3	7.07	0.0491	9.42	0.7854	34	907.9	6.305	106.8	8.901
3.5	9.62	0.0668	11.00	0.9163	35	962.1	6.681	110.0	9.163
4	12.57	0.0873	12.57	1.0472	36	1017.9	7.069	113.1	9.425
4.5	15.90	0.1104	14.14	1.1781	37	1075.2	7.467	116.2	9.687
5	19.63	0.1364	15.71	1.3090	38	1134.1	7.876	119.4	9.948
5.5	23.76	0.1650	17.28	1.4399	39	1194.6	8.296	122.5	10.210
6	28.27	0.1963	18.85	1.5708	40	1256.6	8.727	125.7	10.472
6.5	33.18	0.2304	20.42	1.7017	41	1320.3	9.168	128.8	10.734
7	38.48	0.2673	21.99	1.8326	42	1385.4	9.621	131.9	10.996
7.5	44.18	0.3068	23.56	1.9635	43	1452.2	10.085	135.1	11.257
8	50.27	0.3491	25.13	2.0944	44	1520.5	10.559	138.2	11.519
8.5	56.75	0.3941	26.70	2.2253	45	1590.4	11.045	141.4	11.781
9	63.62	0.4418	28.27	2.3562	46	1661.9	11.541	144.5	12.043
9.5	70.80	0.4922	29.85	2.4871	47	1734.9	12.048	147.7	12.305
10	78.54	0.5454	31.42	2.6180	48	1809.6	12.566	150.8	12.566
10.5	86.59	0.6013	32.99	2.7489	49	1885.7	13.095	153.9	12.828
11	95.03	0.6600	34.56	2.8798	50	1963.5	13.635	157.1	13.090
11.5	103.87	0.7213	36.13	3.0107	52	2123.7	14.748	163.4	13.614
12	113.10	0.7854	37.70	3.1416	54	2290.2	15.904	169.6	14.137
13	132.73	0.9218	40.84	3.4034	56	2463.0	17.104	175.9	14.661
14	153.94	1.0690	43.98	3.6652	58	2642.1	18.348	182.2	15.184
15	176.71	1.2272	47.12	3.9270	60	2827.4	19.635	188.5	15.708
16	201.06	1.3963	50.27	4.1888	62	3019.1	20.966	194.8	16.232
17	226.98	1.5763	53.41	4.4506	64	3217.0	22.340	201.1	16.755
18	254.47	1.7671	56.55	4.7124	66	3421.2	23.758	207.3	17.279
19	283.53	1.9689	59.69	4.9742	68	3631.7	25.220	213.6	17.802
20	314.16	2.1817	62.83	5.2360	70	3848.5	26.725	219.9	18.326
21	346.36	2.4053	65.97	5.4978	72	4071.5	28.274	226.2	18.850
22	380.13	2.6398	69.12	5.7596	74	4300.8	29.867	232.5	19.373
23	415.48	2.8852	72.26	6.0214	76	4536.5	31.503	238.8	19.897
24	452.39	3.1416	75.40	6.2832	78	4778.4	33.183	245.0	20.420
25	490.87	3.4088	78.54	6.5450	80	5026.5	34.907	251.3	20.944
26	530.93	3.6870	81.68	6.8068	82	5281.0	36.674	257.6	21.468
27	572.56	3.9761	84.82	7.0686	84	5541.8	38.485	263.9	21.991
28	615.75	4.2761	87.96	7.3304	86	5808.8	40.339	270.2	22.515
29	660.52	4.5869	91.11	7.5922	88	6082.1	42.237	276.5	23.038

The usual sheet metal fabricator will have patterns for ducts in 0.5-inch steps through 5.5-inch diameter; 1 inch steps 6 inches through 20 inches and 2-inch steps 22 inches and larger diameters.

Recommended Capture Velocities Table 6-2

TABLE 6-2. Recommended Capture Velocities*

Energy of dispersion	Examples	V, ft/min
Little motion	Evaporation from tanks, degreasing	75–100
Average motion	Intermittent container filling; low speed conveyor transfers; welding; plating; pickling	100–200
High	Barrel filling; conveyor loading; crushers	200–500
Very high	Grinding; abrasive blasting; tumbling	500–2000

Factors affecting choices within ranges
Strength of cross-drafts due to makeup air, traffic, etc.
Need for effectiveness in collection: toxicity of contaminants produced by the source exposures from other sources, which reduces acceptable exposure from this source quantity of air contaminants generated – production rate, volatility, time generated
* see also ANSI Z9.2–1979

Figure 6-7. Note that the source is assumed to be DIRECTLY in front of the hood opening.

4. Presence of surfaces near the hood that do not block the flow — depending on their placement, such surfaces may channel more of the airflow over the source, reducing the required airflow. For example, a flange partially blocks the flow from behind the opening, increasing the velocities in front of the hood. Likewise, resting the hood on a tabletop can reduce the exhaust airflow requirement because the airflow is channeled into the hood. Side baffles also can channel airflow to the hood face, reducing the exhaust airflow requirement.

   Baffles perpendicular to the hood opening are sometimes used to block cross-drafts (Figure 6-18). They can channel air over the source and into the hood opening if cross-draft velocities are low. However, it is possible that if cross-draft velocities are high, the upstream baffle will create a strong wake zone that may reduce the effectiveness of the hood rather than enhance it.

5. Objects and surfaces that impede flow across the source and into the hood face — an object placed between the source and the hood can channel the airflow so that it misses the contaminant.

6. Competing air currents — a high velocity cross-draft (e.g., greater than 25% of the capture velocity) may substantially distort the effective zone unless it is blocked by other surfaces or objects. Likewise, competing air currents near the hood due to blowing air, mechanical or operator movements, etc. also can distort and shrink the effective zone.

7. Motion of the contaminant — if the contaminant is released at high velocity, it may fly away from the hood despite the flow of air into the hood. The real problem is generally not the velocity imparted to the particle, but that a competing air current has been simultaneously created.

8. Buoyancy of the contaminated air — if the contaminated air is rising rapidly because it is much warmer than room air, its path becomes a complex function of the velocity components in each direction induced by the air drawn into the hood face and the upward velocity of the buoyant air. If the hood is drawing air solely in the horizontal plane, the buoyant air may escape capture (Figure 6-19). In those cases, the hood generally should be placed above the source with its face angled approximately 45 degrees with the vertical plane, as is shown in Figure 6-20.

6.7.4 Capturing Hood Shape and Placement. The hood should be located so that the preponderance of the emissions is in the effective zone of the hood. Considering the effects of cross-drafts and other disturbances on the effective zone, the hood should be placed so that contaminants are well within the effective zone.

In general, the capturing hood should be at least 50% wider

Ventilation Requirements for Engineered Nanomaterials Section 13.67

13.67 VENTILATION REQUIREMENTS FOR ENGINEERED NANOMATERIALS

Engineered nanoparticles are materials purposefully produced with at least one dimension between 1 and 100 nanometers (nm, 10^{-9} m). Nanoparticles often exhibit unique physical and chemical properties that impart specific characteristics essential in making engineered materials, but little is known about what effect these properties may have on human health. Research has shown that the physicochemical characteristics of particles can influence their effects in biological systems. These characteristics include particle size, shape, surface area, charge, chemical properties, solubility, oxidant generation potential, and degree of agglomeration. Until the results from research studies help us to more fully understand the characteristics of nanoparticles that may pose a health risk, precautionary measures are warranted.

Nanomaterial-enabled products such as nanocomposites, surface-coated materials, and materials comprised of nanostructures, such as integrated circuits, are unlikely to pose a risk of exposure during their handling and use as materials. However, some of the processes used in their production (e.g., formulating and applying nanoscale coatings) may lead to exposure to nanomaterials, and the cutting or grinding of such products could release respirable-sized nanoparticles.

Maintenance on production systems (including cleaning and disposal of materials from dust collection systems) is likely to result in exposure to nanoparticles if deposited nanomaterials are disturbed. The following workplace tasks can increase the risk of exposure to nanoparticles:

- Working with nanomaterials in liquid media without adequate protection
- Working with nanomaterials in liquid during pouring or mixing operations, or where a high degree of agitation is involved
- Generating nanoparticles in non-enclosed systems
- Handling (e.g., weighing, blending, spraying) powders of nanomaterials
- Maintenance on equipment and processes used to produce or fabricate nanomaterials and the cleaning-up of spills and waste material containing nanomaterials
- Cleaning of dust collection systems used to capture nanoparticles
- Machining, sanding, drilling, or other mechanical disruptions of materials containing nanoparticles

13.67.1 Precautionary Measures. Given the limited amount of information about health risks that may be associated with nanomaterials, taking measures to minimize worker exposures is prudent. For most processes and job tasks, the control of airborne exposure to nanoaerosols can be accomplished using a variety of engineering control techniques similar to those used in reducing exposure to general aerosols (see Chapters 4, 5, 6, and 8). The implementation of a risk management program in workplaces where exposure to nanomaterials exists can help to minimize the potential for exposure to nanoparticles. Elements of such a program should include the following:

- Evaluating the hazard posed by the nanomaterial based on available physical and chemical property data, toxicology, or health-effects data
- Assessing the worker's job tasks to determine the potential for exposure (see Chapter 1)
- Educating and training workers in the proper handling of nanomaterials (e.g., good work practices)
- Establishing criteria and procedures for installing and evaluating engineering controls (e.g., exhaust ventilation) at locations where exposure to nanomaterials might occur (see Chapters 5 and 6)
- Systematically evaluating exposures to ensure that control measures are working properly and that workers are being provided the appropriate personal protective equipment
- Developing procedures for determining the need for and selecting proper personal protective equipment (e.g., clothing, gloves, respirators)

13.67.2 Controlling Potential Worker Exposures. When controlling potential exposures within a workplace, it is recommended to use the hierarchy of controls to reduce worker exposures (see Chapter 1). The philosophy of the hierarchy of controls is to eliminate the hazard when possible (i.e., substitute with a less hazardous material) or, if not feasible, control the hazard at or as close to the source as possible.

13.67.2.1 Applicable Engineering Controls. If the potential hazard cannot be eliminated or substituted with a less hazardous or non-hazardous substance, then engineering controls should be installed and tailored to the process (see Chapters 5 and 6). Engineering control techniques such as source enclosure (i.e., isolating the generation source from the worker) and local exhaust ventilation systems should be effective for capturing airborne nanoparticles. However, the type of engineering control used should take into account information on the potential hazardous properties of the precursor materials and intermediates as well as those of the resulting nanomaterial. In light of current scientific knowledge about the generation, transport, and capture of aerosols,[13.67.1, 13.67.2] airborne exposure to nanomaterials can most likely be controlled using a variety of engineering control techniques similar to those used in reducing exposures to general aerosols.[13.67.3, 13.67.4] Current knowledge indicates that a well-designed exhaust ventilation system with a high-efficiency particulate air (HEPA) filter should effectively remove nanomaterials.

Other factors that influence selection of controls include the physical form of the nanomaterial as well as task duration and frequency. For instance, working with nanomaterial in the

slurry form in low quantities would require a less rigorous control system than those that would be required for large quantities of nanomaterials in a free or fine powder form. Unless cutting or grinding occurs, nanomaterials that are encapsulated in a solid, nanocomposites, and surface coated materials typically would not require engineering controls. Based on what is known regarding nanomaterial motion and behavior in air, traditional engineering control techniques should be effective to reduce the potential for worker exposure (see Chapters 5 and 6 and Figure 13-67-1). Given the state of the science and uncertainty in health risks from exposure to nanoparticles, a precautionary control banding approach would be a reasonable way to assess the potential risk, or potency, from airborne nanoparticles (see Chapter 1, Table 1-1). If little is known about the properties or hazards of the nanomaterial, the potency band should be judged to be 'high'. This is precautionary and is an appropriate position for new materials with unknown hazards. The quantity of the bulk nanomaterial that is synthesized or handled in the manufacture of a product will influence the selection of engineering controls as well. Once a potency band is determined, Table 13-67-1 can be used to select the appropriate ventilation control for the application, with consideration of the process size.

It may be helpful to walk through an example to illustrate how to select a suitable control device for a nanotechnology process. In this example, the control approach outlined above will be combined with process specific information that would be required to make a well-informed decision in selecting the best control device; weighing the factors of worker safety, the properties and behavior of nanoparticles, and nanomaterial process considerations. In this example, it is assumed that research quantities of nanoparticles are typically handled in laboratories with ventilation controls. The second assumption will be that carbon nanotubes are being handled in small quantities to conduct research. Since the quantities are small, local containment and control can be applied, such as low-flow vented work stations and small glove box chambers. The properties of nanomaterials, along with the unique methods that may be employed for producing them, may mean that traditional exhaust ventilation may be more energetic than necessary for removing incidentally released nanoparticles. When carbon nanotubes are being handled, the ventilation engineer should determine the aerodynamic diameter of the tubes, since their density is ~ 1.4 grams per cubic centimeter (g/cc; for comparison, the density of water is 1 g/cc). This information allows the engineer to determine the aerosolization potential, and airborne behavior of the nanomaterial. Utilizing this information, an engineering control should be selected that ensures protection of the worker, as well as minimizing nanomaterial aerosolization and losses. For low-density materials, like carbon nanotubes, it is possible to use low-flow (not low face velocity) hoods to reduce the turbulence within the hood, therefore reducing the potential for aerosolization and loss of the nanotubes in the hood. As the quantities of nanomaterials used are increased, care must be taken to ensure the selected ventilation control is adequate to prevent potential worker exposure and the migration of nanomaterials into the work room or adjacent areas. Ventilation systems to control nanoparticles should be designed, tested, and maintained using recommended approaches (see Chapters 5 and 6).

13.67.2.2 Collection Efficiency of Filters for Engineered Nanomaterials. HEPA filtration and a well-designed ventilation system should be sufficient to remove nanoparticles.[13.67.2] Limited studies have reported the efficacy of filter media typically found in control systems in capturing nanoparticles. The lack of data on filtration performance against nanoparticles (in particular nanoparticles smaller than 20 nm) is primarily due to the challenges in generating and quantifying particles in those size ranges. Despite these limitations, the results of some studies using different filter media challenged with monodispersed aerosols (silver 4–10 nm and dioctylphthalate 32–420 nm) were in agreement with classical single-fiber theory showing an increase in filtration efficacy for smaller size particles.[13.67.3] No evidence for particle thermal rebound was observed. Similar results have been recently reported by Kim et al. using different filter media challenged with particles ranging in size from 2.5–20 nm, indicating that other filter media would behave similarly.[13.67.6] HEPA filters used in dust collection systems should be coupled with well-designed filter housings. If the filter is improperly seated within the housing, nanoparticles have the potential to bypass the filter, leading to lower than predicted filter efficiencies.[13.67.7]

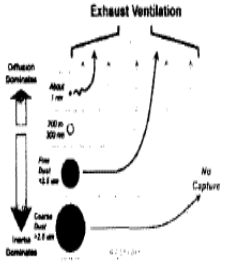

FIGURE 13-67-1. Exposure control of particles (illustration of how particle diameter-related diffusion and inertia influence particle capture efficiency in a ventilation system). Particles with a diameter of 200–300 nm have minimal diffusion and inertial properties and are easily transported by moving air and captured. Particle motion by diffusion increasingly dominates as particle diameter decreases below 200 nm. The inertial behavior of larger particles, especially those ejected from energetic processes such as grinding, increases significantly with particle diameter, enabling them to cross the streamlines of moving air and avoid capture.[13.67.8]

TABLE 13-67-1. Nanomaterial Process Control Recommendations Corresponding to Potency Bands from Chapter 1, Table 1-1

Potency Band	Process Size		
	Large	Medium	Small
1	Dilution ventilation	Dilution ventilation	Dilution ventilation
2	LEV–fixed position hoods Ventilated work benches/tables	LEV–fixed position hoods Ventilated work benches/tables	LEV–adjustable position hoods Ventilated work benches/tables
3	Clean rooms	Chemical fume hood Custom enclosures	Glove box Chemical fume hood Custom enclosures
4	Clean rooms	Chemical fume hood Custom enclosures	Glove box Chemical fume hood Custom enclosures

LEV–Local exhaust ventilation

Do not directly exhaust effluent air that is reasonably suspected to contain engineered nanoparticles. Exhaust air must be passed through a HEPA filter, since at this time it is the only air pollution control device known to control nanoparticles with high efficiency.

REFERENCES

13.67.1 Seinfeld J.A.; Pandis, S.N. Atmospheric chemistry and physics. New York: John Wiley and Sons (1998).

13.67.2 Hinds, W.C.: Aerosol technology: properties, behavior, and measurement of airborne particles, 2nd ed. New York: Wiley-Interscience (1999).

13.67.3 Ratherman, S.: Methods of control. In: Fundamentals of industrial hygiene, B. Plog, Ed. Itasca, IL: National Safety Council (1996).

13.67.4 Burton, J.: General methods for the control of airborne hazards. In: The occupational environment — its evaluation and control, S.R. DiNardi, Ed. Fairfax, VA: American Industrial Hygiene Association (1997).

13.67.5 Van Osdell, D.W.; Liu, B.Y.H.; Rubow, K.L.; Pui, D.Y.H.: Experimental-study of submicrometer and ultrafine particle penetration and pressure-drop for high-efficiency filters. Aerosol Sci Technol 12(4):911–925 (1990).

13.67.6 Kim, S.E.; Harrington, M.S.; Pui, D.Y.H.: Experimental study of nanoparticles penetration through commercial filter media. J Nanopart Res 9:117–125 (2007).

13.67.7 NIOSH: Filtration and air-cleaning systems to protect building environments. Cincinnati, OH: U.S. Department of Health and Human Services, Centers for Disease Control and Prevention, National Institute for Occupational Safety and Health, DHHS (NIOSH) Publication No. 2003–136 (2003).

13.67.8 U.S. DOE: Approach to Nanomaterial. ES&H, U.S. Department of Energy's Nanoscale Science Research Centers. Washington, DC: U.S. Department of Energy (2007).

13.67.9 Schulte, P.; Geraci, C.; Zumwalde, R.; Hoover, M.; Kuempel, E.: Occupational risk management of engineered nanoparticles. J Occup Environ Hyg 5: 239–249 (2008a).

Contents

1.0 PURPOSE 3
2.0 APPLICABILITY 3
3.0 BACKGROUND 3
4.0 POLICY 3
5.0 RESPONSIBILITIES 3
5.1 Occupational Radiation Worker 3
5.2 Supervisor of Occupational Radiation Worker 3
5.3 User of Generally Licensed Device 4
5.4 Radiation Safety Officer 4
5.5 Authorized User 4
5.6 Safety Committee Chairperson 4
5.7 Shipper of RAM 4
5.8 Receiving Personnel 4
5.9 Medical Director, Occupational Medicine Services 4
5.10 Safety and Health Division Chief 4
5.11 Manager, Support Service Contractor Responsible for Maintenance and Operation of Institutional Facilities 4
5.12 Chiefs of the Facilities Division's Branches Responsible for Operations, Project, and Systems Management Functions 4
5.13 Support Service Contractor Supervision 5
6.0 REQUIREMENTS 5
6.1 Training and Qualifications (*NPR 1800.1, 10 CFR 19, 49 CFR, Subpart H, IATA Dangerous Goods Regulations (DGR), and GRC's RAM License*) 5
6.1.1 User of RAM Not Covered by General License 5
6.1.2 User of RAM within a Generally Licensed Device 5
6.1.3 Industrial Radiographer Using RAM 5
6.1.4 Transportation of RAM 6
6.2 Medical Surveillance (*NPR 1800.1*) 6
6.3 Dosimetry and Dose Limits (see Appendix C for detailed guidelines) (*NPR 1800.1 and 10 CFR 20.1502*) 6
6.3.1 Dosimetry Assignment 6
6.3.2 GRC Individual Dose Limits 7
6.3.3 Administrative Dose Limits and Dose Investigation 7
6.3.4 Internal Dosimetry 7
6.3.5 Dose Reports 8
6.4 Contamination Control (*10 CFR 20*) 8
6.5 Radiological Surveys of Sources, Equipment, and Facilities (*10 CFR 20*) 8
6.6 Material Receipt and Accountability (*10 CFR 20 and 10 CFR 30*) 8
6.6.1 Planning and Preparing for a RAM Acquisition 8
6.6.2 Receipt of Labeled Packages of RAM 9
6.6.3 Receipt of Nonlabeled Packages of RAM 9
6.6.4 Logging and Taking Inventory of RAM 9
6.7 Authorization of RAM Uses and Users (*NPR 1800.1*) 10
6.7.1 Safety Permits 10
6.7.2 RSO Approval of RAM Activities and Users 10
6.7.3 Safe Use of Radionuclides and Emergency Procedures 10
6.8 Postings, Signage, Notifications, and Labels (*10 CFR 19 and 10 CFR 20*) 11
6.8.1 Postings for Workers 11
6.8.2 Reports to the NRC 11
6.8.3 Area Postings and Controls for Restricted Areas 11
6.8.4 Container Labels 11
6.9 Radioactive Waste Management (*10 CFR 20*) 11

6.10 Transportation of RAM and Wastes (*10 CFR 71, 49 CFR, Subpart H, and IATA DGR*) 11
6.10.1 Transportation Regulations 12
6.10.2 Shipment Coordination 12
6.10.3 Shipment Preparation 12
6.10.4 Transportation of Portable Moisture/Density Gauge in a Government or Private Vehicle 12
6.11 Construction Contractor Use of Radioactive Sources (*10 CFR 34 and 10 CFR 30*) 12
6.11.1 Onsite Radiography 13
6.11.2 Portable Density Gauge Use 13
6.11.3 RSO Approval of Onsite Radiography and Density Gauge Use 13
6.12 Self-Luminous Exit Signs (*10 CFR 31.5, NUREG 1556-Vol. 16, and NPR 1800.1*) 13
6.12.1 Description 13
6.12.2 Regulatory Licensing for Self-Luminous (or Tritium-Containing) Exit Signs 13
6.12.3 Management of Self-Luminous Exit Sign Inventory 14
6.12.4 Disposition of Signs When No Longer Needed 14
6.13 Smoke Detectors Containing RAM (*10 CFR 30*) 14
6.13.1 Description 14
6.13.2 Licensing and Requirements 15
6.13.3 Disposition When No Longer Needed 15
7.0 RECORDS (maintained by the RSO or health physicist unless otherwise noted) 15
8.0 REFERENCES 15
APPENDIX A .—DEFINITIONS AND ACRONYMS 17
APPENDIX B .—RADIATION SAFETY OFFICER RESPONSIBILITIES 21
APPENDIX C .—PROCEDURES FOR PERSONAL DOSIMETRY 22
APPENDIX D .—CONTAMINATION CONTROL GUIDELINES 24
APPENDIX E .—SUMMARY OF RADIOLOGICAL SURVEY REQUIREMENTS 26
APPENDIX F .—MATERIAL RECEIPT AND ACCOUNTABILITY 27
APPENDIX G .—EMERGENCY PROCEDURES 29
APPENDIX H .—TRANSPORTATION OF RADIOACTIVE MATERIAL 30
APPENDIX I .—GUIDANCE FOR CONSTRUCTION CONTRACTOR USE OF RADIOACTIVE SOURCES 34
APPENDIX J 36
INFORMATIONAL BRIEFING SHEET FOR OVERSIGHT OF RADIOGRAPHIC TESTING 36
APPENDIX K .—GUIDANCE FOR RADIOACTIVE WASTE MANAGEMENT PROCEDURES 38
APPENDIX L .—SELF-LUMINOUS EXIT SIGN PROCEDURES 40

List of Tables

TABLE D.1.—MAXIMUM PERMISSIBLE CONTAMINATION LEVELS FOR UNRESTRICTED USE 25

List of Figures

Figure 1.—Transportation Radioactive Material Labels. 9
Figure 2.—Types of Smoke Detectors ..... **Error! Bookmark not defined.**

Chapter 8—Radiation Protection for Radioactive Materials

Note: *The current version of this chapter is maintained and approved by the Safety and Health Division (SHeD). The last revision date of this chapter was December2011. The current version is maintained on the Glenn Research Center intranet at http://smad-ext.grc.nasa.gov/shed/pub/ohpm/ohpm-manual.pdf.*
Approved by Chief of Safety and Health Division.

1.0 PURPOSE

This chapter describes the policies, procedures, and radiation protection requirements for the receipt, use, storage, or transfer of radioactive material (RAM) or equipment using such materials. The scope of RAM addressed by this chapter includes the following: radioactive sources and materials covered by United States Nuclear Regulatory Commission (NRC) licenses (general, specific, etc.), radioactive sources and materials not regulated by the NRC, and radioactive waste. Terms and acronyms used in this chapter are defined in Appendix **A**.

2.0 APPLICABILITY

The provisions of this chapter are applicable to civil servants, support service contractors (SSCs), and construction contractors at NASA Glenn Research Center (GRC) Lewis Field and Plum Brook Station.

3.0 BACKGROUND

RAM and radiation-generating equipment (RGE) are used safely throughout the industrial, medical, and research communities. When not properly controlled, however, ionizing radiation can present a hazard to individual users and/or others in the immediate environment. Historical and scientific data tell us that very high doses of ionizing radiation received over a short period (acute exposure) and high exposures received over a long period (i.e., chronic exposure) present various health hazards to people. The Glenn Radiation Protection Programs establish the policies, procedures, and responsibilities necessary for the safe operation and handling of RAM and RGE.

4.0 POLICY

The GRC Radiation Protection Programs for Radioactive Materials and for Radiation-Generating Equipment are designed to maintain and preserve the health of our employees by eliminating unnecessary and accidental exposures and minimizing necessary exposures to ionizing radiation. Exposures to ionizing radiation are to be kept as low as reasonably achievable (ALARA).

All uses of RAM or RGE are approved by the Radiation Safety Officer (RSO) via either the materials application process, the health and safety plan process, or the safety permit process. Representatives of the Safety and Health Division (SHeD) periodically assess the ionizing radiation hazards of the activities. Also, the RSO is responsible for ensuring that an annual audit of the effectiveness of the Radiation Safety Program for Radioactive Materials is conducted.

In addition to protecting our workers and the environment, the requirements and conditions of GRC's Radiation Protection Program for Radioactive Materials demonstrates compliance with applicable regulations of NRC and the Occupational Safety and Health Administration (OSHA). Other regulations applicable to this program include those from the U.S. Environmental Protection Agency (EPA), the U.S. Department of Transportation (DOT), and the International Air Transport Association (IATA).

5.0 RESPONSIBILITIES

5.1 Occupational Radiation Worker

The occupational radiation worker shall satisfy training and other requirements of this chapter in addition to working in a safe manner in accordance with established procedures for their RAM.

5.2 Supervisor of Occupational Radiation Worker

The supervisor of the occupational radiation worker shall ensure the user of RAM follows established procedures and meets requirements specified in this chapter and in any applicable safety permits. Also, for Support Service Contractors (SSC), supervisors may be required to maintain medical surveillance and training records.

5.3 User of Generally Licensed Device

The user of a generally licensed (GL) device shall follow the manufacturer's conditions established for the general license and the applicable local-level procedures for the device, and shall satisfy any training requirements identified by the RSO.

5.4 Radiation Safety Officer

The RSO shall ensure activities involving RAM are conducted in accordance with applicable NRC, OSHA, DOT, IATA, and NASA requirements. See Appendix **B** for detailed responsibilities.

5.5 Authorized User

The authorized user (AU) shall supervise the use of licensed RAM, shall ensure that RAM used in his or her particular lab or area are used safely and according to regulatory requirements, and shall ensure that procedures and engineering controls are used to keep occupational doses and doses to members of the public ALARA.

5.6 Safety Committee Chairperson

The safety committee chairperson shall lead safety permit evaluations and provide guidance to the safety permit requester on how to satisfy permit conditions. In cases involving RAM, the safety committee chairperson shall include the RSO as an ad hoc member of their evaluation committee.

5.7 Shipper of RAM

The shipper of RAM shall ensure that shipments of RAM satisfy current DOT and IATA regulations pertaining to the shipment of hazardous materials and shall satisfy DOT and IATA training requirements.

5.8 Receiving Personnel

The receiving personnel shall be aware of their role in the receipt and accountability procedures for RAM, including notifying the RSO (or SHeD health physics representative) when RAM are received.

5.9 Medical Director, Occupational Medicine Services

The Occupational Medicine Services Medical Director shall provide medical surveillance and post-exposure evaluation, as well as follow-up actions, in accordance with NASA Procedural Requirement (NPR) 1800.1. Records from such examinations and evaluations shall be retained for at least 30 years. Results of examinations shall be discussed with employees as needed. . For SSC, such records may alternately be maintained by the employer.

5.10 Human Capital Development Division Chief

Maintain records for employee completion of radiation safety courses and any associated examinations. For SSC, such records may alternately be maintained by the SSC supervision.

5.11 Safety and Health Division Chief

The SHeD chief shall support the RSO and safety committee chairpersons in the performance of their duties.

5.12 Manager, Support Service Contractor Responsible for Maintenance and Operation of Institutional Facilities

The manager for SSC responsible for maintenance and operation of institutional facilities will maintain and manage the inventory of luminous exit signs at their respective location per requirements in this chapter and in Appendix **L**. Also, the manager will provide smoke detector heads containing RAM to the RSO or Code F waste management personnel when they have been taken out of service and are no longer needed.

5.13 Chiefs of the Facilities Division's Branches Responsible for Operations, Project, and Systems Management Functions

The Chiefs of the Facilities Division's Branches Responsible for Operations, Project, and Systems Management Functions shall support management of luminous exit sign inventory per requirements in the chapter and in Appendix **L**.

Also, they shall provide smoke detector heads containing RAM to the RSO when they have been taken out of service and are no longer needed.

5.14 Support Service Contractor Supervision

If applicable, maintain records for employee completion of radiation safety courses and any associated examinations as well as records of any medical evaluations or examinations triggered because of potential exposure to ionizing radiation.

6.0 REQUIREMENTS

6.1 Training and Qualifications (*NPR 1800.1, 10 CFR 19, 49 CFR, Subpart H, IATA Dangerous Goods Regulations (DGR), and GRC's RAM License*)

6.1.1 User of RAM Not Covered by General License

NASA civil servants and SSCs using radioactive sources and/or materials not included within a generally licensed device, or a device specifically exempt from licensing, shall receive radiation safety training prior to using the RAM and biennially thereafter. Such individuals would be considered to be "occupational radiation workers." This group would include individuals working with radioactive sources and the SHeD staff supporting this use. This radiation safety training shall be specified by the RSO.

6.1.1 - Employee completion of radiation safety training is documented in SATERN, which is accessible by the reporting function of an administrative SATERN session.

6.1.1.1 Instruction on Prenatal Radiation Exposure

Female radiation workers and their supervisors shall also receive special instructions on the potential health risks of prenatal radiation exposure. The RSO shall provide this special instruction and document acknowledgment of such instruction. Any written declaration made by a pregnant employee who is occupationally exposed to ionizing radiation will be maintained on file by the RSO.

6.1.1.1 - Documentation on prenatal exposure instruction will either be maintained by the RSO, or, be documented in SATERN, which is accessible by the reporting function of an administrative SATERN session.

Written declarations made by pregnant workers will be maintained by the RSO.

6.1.1.2 User of the Portable Moisture/Density Gauge

In addition to the radiation safety training, operators of the portable moisture/density gauge will also satisfy gauge use training as outlined in NUREG 1556, Volume 1, Appendix D.

6.1.1.2 - Employee completion of radiation safety training and gauge use training is documented in SATERN, which is accessible by the reporting function of an administrative SATERN session.

6.1.2 User of RAM within a Generally Licensed Device

GL devices are designed to be inherently safe under reasonably expected use scenarios. The user shall be trained to operate their specific equipment per any training and qualification criteria identified in the applicable Business Management System (BMS) or local procedural documents for said activity as well as the relevant safety permit. In addition, radiation safety training may be required by the RSO.

6.1.2 – If required by RSO, employee completion of radiation safety training is documented in SATERN, which is accessible by the reporting function of an administrative SATERN session.

6.1.3 Industrial Radiographer Using RAM

GRC does not possess an NRC license permitting employees to use radioactive sources for conducting industrial radiography.

Construction contractors conducting radiography activities at temporary job sites (i.e., in the field) and their assistants shall satisfy training and work experience requirements specified by the NRC in 10 Code of Federal

Regulations (CFR) 34, Licenses for Radiography and Radiation Safety Requirements for Radiographic Operations. Records of such training and certification shall be made available to the GRC RSO upon request.

6.1.4 Transportation of RAM

Employees performing pre-transportation and transportation functions, as described in 49 CFR 171.1, shall receive initial and periodic training in accordance with Subpart H of the DOT's 49 CFR 172 for hazardous materials and the IATA Dangerous Goods Regulations.

6.1.4.1 RSO and Health Physics Staff

The RSO and any HP staff performing functions identified in 49 CFR 171.1 shall receive the training identified above. This training shall be function-specific and relevant and shall be repeated at least every 3 years for DOT and at least every 2 years for IATA.

6.1.4.1 – Training and certification records for the RSO and HP staff can be found in either the RSO files or in SATERN. The latter documentation would be accessible via the reporting function of an administrative SATERN session.

6.1.4.2 Shipper of RAM

The employee designated as the shipper of RAM shall receive the training identified above. This training shall be function-specific and relevant and shall be repeated at least every 3 years for DOT and at least every 2 years for IATA.

6.1.4.2 – Training and certification records for the RAM shipper will be maintained by his SSC supervision. For convenience, the RSO will also attempt to maintain a copy of such records on file.

6.1.4.3 Transportation of Portable Moisture/Density Gauge

Anyone transporting a portable moisture/density gauge in a private or government vehicle shall receive initial and periodic training in accordance with Subpart H of the DOT's 49 CFR 172 for hazardous materials. This training shall be function-specific and relevant and shall be repeated at least every 3 years.

6.1.4.3 – Training and certification documentation for employees transporting a nuclear gauge is documented in SATERN, which is accessible by the reporting function of an administrative SATERN session. For convenience, the RSO will also attempt to maintain a copy of such records on file.

6.2 Medical Surveillance (*NPR 1800.1*)

Radiation medical examinations shall be conducted in accordance with the requirements set forth in NPR 1800.1, NASA Occupational Health Program Procedures. Examination categories include preplacement examinations, periodic reexaminations, situational examinations, and termination examinations. Inclusion in this program is required for employees receiving routine exposure to ionizing radiation in doses above 0.5 rem/year or 0.125 rem/quarter. Currently, no such exposures are anticipated for GRC personnel. Additionally, a situational examination may be appropriate for accidental exposures to potentially high doses of radiation or if a biological uptake (inhalation or ingestion) of a significant amount of RAM is suspected.

6.2 – Any such medical records would be maintained by Occupational Medical Services.

6.3 Dosimetry and Dose Limits (see Appendix C for detailed guidelines) (*NPR 1800.1 and 10 CFR 20.1502*)

6.3.1 Dosimetry Assignment

The use of personal dosimetry to estimate external radiation exposure may be required for certain uses of RAM. The RSO shall identify when and what type of dosimetry is required based upon the radioisotopes involved and how they are being used. At a minimum, the RSO shall assign personal dosimetry to individuals working with RAM who are likely to receive an annual dose in excess of 10 percent of their annual allowable limit or other situations prescribed

in Section 20.1502 of Title 10 of the CFR. In practice, workers are typically assigned to use dosimetry at much lower exposure levels.

6.3.1 – The requirement to use dosimetry is specified by the RSO as a condition on the safety permit associated with the activity. Radiation dosimetry records are maintained by the RSO of the SHeD.

6.3.2 GRC Individual Dose Limits

Note: *Dose limits must actually take into consideration doses from sources of radiation that are both outside the body (external) AND inside the body (internal), which, are referred to as Deep Dose Equivalent (DDE) and Committed Effective Dose Equivalent (CEDE), respectively. This DDE is commonly referred to as the "whole body dose" for external radiation dosimetry. The individual dose limits for DDE and CEDE are both 5 rem, as is the overall occupational dose limit, which is referred to as the Total Effective Dose Equivalent (TEDE). As described, the TEDE=DDE+CEDE and none of the three can exceed 5 rem per year.*

6.3.2 – Dosimetry results are reviewed by the RSO on at least a quarterly basis to monitor cumulative doses of record for employees participating in the Center's radiation dosimetry program.

The following dose limits shall apply to individuals at GRC for all sources (RAM and RGE) of ionizing radiation:

6.3.2.1 Occupational Annual Dose Limits

- Whole body/deep dose equivalent(DDE), total effective dose equivalent (TEDE), or committed effective dose equivalent (CEDE): 5 rem (0.05 sievert (Sv))
- Lens of eye (lens dose equivalent (LDE)): 15 rem (0.15 Sv)
- Extremities, skin (shallow dose equivalent (SDE)), specific organs: 50 rem (0.5 Sv)

6.3.2.2 Gestation Period Dose Limit to Unborn Fetus of "Declared Pregnant" Radiation Worker

- Whole body/deep dose equivalent (DDE), total effective dose equivalent (TEDE), or committed effective dose equivalent (CEDE): 0.5 rem (0.005 Sv)

6.3.2.3 Members of the Public (i.e. non-radiation workers) Dose Rate Limit and Annual Dose Limit (due to occupational radiation sources)

- Non-radiation workers shall not be exposed to an external dose rate where they could receive more than 2 millirem (0.02 millisievert)
- Whole body/deep dose equivalent (DDE), total effective dose equivalent (TEDE), or committed effective dose equivalent (CEDE): 0.1 rem (0.001 Sv)

6.3.3 Administrative Dose Limits and Dose Investigation

In practice, worker doses at GRC have historically been well below the stated limits. Administrative occupational dose limits for radiation workers shall be established at 10 percent of the limits in Section **6.3.2**. Should a worker's dose for a recording period appear unexpectedly high or, at a minimum, reach this administrative limit (prorated for the recording period), the RSO would initiate an investigation into the cause of the individual's dosimetry results. This 10 percent dose level is established as an administrative dose limit.

6.3.3 – Documentation for the investigations associated with dose results are kept with the individuals' dose records and with the chronological dosimetry reports.

6.3.4 Internal Dosimetry

Currently, all radiation dose-related activities at GRC involve working with RAM or sources in such a manner as to only receive an external dose. Certain activities or working environments may also subject workers to internal sources of radiation dose. This internal component would also need to be taken into account when referencing the

allowable limits. Should the scope of activities at GRC expand to include tasks with internal radiation dose hazards, the RSO would need to revise the dosimetry program accordingly.

6.3.5 Dose Reports

Employees who participate in the dosimetry program shall receive an annual report summarizing their radiation exposure data per 10 CFR 19.13. Also, participants can, at any time, make such a request. For workers engaged in licensed activities, this report shall contain the following statement (or similar): "This report is furnished to under the provisions of the Nuclear Regulatory Commission regulation 10 CFR 19. You should preserve this report for further reference." In addition, former employees engaged in licensed activities can request a dose history for their time at GRC. The request shall be satisfied within a specified timeframe.

6.3.5 – Copies of the reports are kept with the employees' individual dose records.

6.4 Contamination Control (*10 CFR 20*)

Improper handling of nonsealed radioactive sources or the loss of integrity of a sealed source could result in the spread of RAM to nearby personnel, equipment, and the environment. For most radioisotopes, a relatively small amount of radioactivity is readily detectable (using instrumentation) on one's skin or clothes, or on working or equipment surfaces, and is typically unacceptable. Decontamination of individuals, areas, or equipment may be the proper course of action. Building materials or other items not readily decontaminated may need to be disposed of as radioactive waste. More specific guidelines are provided in Appendix **D**.

6.5 Radiological Surveys of Sources, Equipment, and Facilities (*10 CFR 20*)

Various radiological surveys shall be conducted periodically to verify the RAM and their emitted radiation are under control. The frequency of performing such surveys may be prescribed by DOT or NRC regulations, our NRC license requirements, or conditions specified for a GL device containing a nuclear source. The RSO shall also be responsible for establishing periodicities for radiological surveys of facilities where RAM are utilized, handled, or stored. Surveys shall be documented using a GRC Radiological Survey Form. (This form is used by the health physics staff and can be found in the SHeD Health Physics Procedures.)

Surveys conducted in support of source receipt or a shipment of RAM are specified in Appendix **F** and Appendix **H**, respectively. Other survey requirements are summarized in Appendix **E**.

6.5 – Documentation of surveys is located in the "Radiological Survey Log" and corresponding "Radiological Survey Forms," which are kept in survey notebook/files.

6.6 Material Receipt and Accountability (*10 CFR 20 and 10 CFR 30*)

6.6.1 Planning and Preparing for a RAM Acquisition

Prior to purchasing or receiving any RAM or devices containing such materials, individuals shall contact the RSO to discuss relevant requirements associated with possessing and using the RAM.

6.6.1.1 Licensing Assessment and Amendment

The RSO shall determine if there are licensing issues associated with the new source. For example, does GRC's current material license allow for possession of the source or would the license need to be first amended? If the RAM is contained within a GL or license-exempt device, what are the restrictions or conditions of use associated with the general license or license exemption?

> ***Note:*** *Amendment requests for the Center's NRC materials license can take 2 or more weeks to prepare and submit, assuming all necessary information is available. The NRC could take up to 90 days (or longer) to review and approve the proposed amendment or reply with questions. Receipt of the RAM would not be legally authorized until the RSO has received notice from the NRC. Similarly, the source supplier would not be legally authorized to transfer a source to GRC unless they had a copy of our license demonstrating the possession was authorized.*

6.6.1.1 – Copies of amendment requests and corresponding license modifications are maintained on file by the RSO.

6.6.1.2 Logistic Assessment for RAM Use and Storage

The RSO shall determine if use and storage locations of the device afford adequate safety and security. Facilities shall have adequate shielding characteristics for the radioactive source to meet the exposure criteria specified in 6.3.2.3 and shall enable employees to work with the source(s) safely. The proposed facility shall also allow for adequate control of the RAM.

6.6.1.3 Disposition of Radioactive Source

The RSO shall assess post-use storage and disposal issues associated with the RAM or device.

6.6.1.4 Assessment of RAM Use Requirements

The RSO shall establish needs for worker training, engineering or administrative controls, radiation dosimetry, radiation detection instrumentation, etc.

6.6.2 Receipt of Labeled Packages of RAM

6.6.2.1 Labeled Versus Non-labeled Packages

The termed "labeled" refers to the transportation categories of White I, Yellow II, and Yellow III for radioactive sources or RAM (see Figure **1**). The radioactivity content in such packages exceeds the levels found in non-labeled conveyances, most commonly "Radioactive material—excepted package…," which is typically for smaller sources or instruments or equipment containing smaller sources.

White I Yellow II Yellow III

Figure 1.—Transportation Radioactive Material Labels.

6.6.2.2 Shipping and Receiving Department

Labeled (i.e., White I, Yellow II, or Yellow III) RAM packages shipped to GRC shall be processed by the receiving office in accordance with Appendix **F**. Since receipt of such packages is typically coordinated by the RSO, the RSO shall, when feasible, notify shipping and receiving personnel of the estimated arrival date of the expected package.

6.6.2.3 Health Physics Staff

The RSO or other SHeD health physics representative shall open the package in accordance with Appendix **F** and good RAM-handling practices, and then process the receipt of the contents per Section **6.6.4**.

6.6.3 Receipt of Non-labeled Packages of RAM

The RSO or other SHeD health physics representative shall open the package in accordance with good RAM-handling practices using applicable parts of Appendix **F** as guidance, and then process the receipt of the contents per Section **6.6.4**.

6.6.4 Logging and Taking Inventory of RAM

6.6.4 – "Radioactive Material Receipt and Inventory Record" forms (C-811) are maintained on file by the RSO. The electronic radioactive materials, or radioactive source, inventory is maintained by the RSO. Semiannual printouts of the physical inventory are maintained on file by the RSO

6.6.4.1 Documenting Receipt of Radioactive Source or RAM

The RSO or member of SHeD health physics staff shall complete a NASA C–811, Radioactive Material Receipt and Inventory Record, to be placed in the appropriate RAM file folder along with any shipping or manufacturer's information for the item. In addition, the radioactive source inventory shall be updated. When receiving activated materials or components that contain multiple isotopes, the inventory entry shall identify the item and list the necessary information for each isotope.

6.6.4.2 Movement of Radioactive Sources or RAM

Internal transfers of radioactive sources and equipment shall be coordinated with the SHeD health physics function and shall be approved by the RSO. This notification is necessary to ensure that RAM is appropriately tracked, records are updated, and that any safety and security issues associated with the new location are assessed.

6.6.4.3 Physical Inventory

A physical inventory of licensed, GL, and unlicensed RAM shall be conducted every 6 months by the RSO, other SHeD health physics staff, and Plum Brook Station environmental, health or safety staff. Upon completion of the inventory, the RSO shall print off the current inventory and place this document in the inventory file.

6.7 Authorization of RAM Uses and Users (*NPR 1800.1*)

6.7 – Safety permit documentation is maintained by the chairperson of the committee issuing the permit. For convenience, the RSO will try to maintain a copy of such paperwork. Any other use authorizations and associated documentation for RAM will be maintained by the RSO.

6.7.1 Safety Permits

SHeD's safety permit process is used as a vehicle for assessing and addressing potential health and safety hazards associated with activities at GRC and, as such, it will be used for most RAM uses. The RSO shall assist area safety committees in determining requirements, controls, and conditions for a safety permit involving the use of RAM. Typical permit conditions could include training, posting and labeling, source security, the use of radiation dosimetry, periodic radiation surveys, and written operating and emergency procedures. There are certain items containing RAM that could be considered inherently safe, such as certain GL or license-exempt devices, and therefore, require less-stringent use conditions. The RSO shall be responsible for making such a determination and advising the safety committee chair whether or not safety permit conditions were needed to address the use of the RAM-containing device or item.

6.7.2 RSO Approval of RAM Activities and Users

Employees shall satisfy whatever license or safety permit conditions exist for using a particular radioactive source or device containing RAM. Most operations involving the use of RAM would be covered under the safety permit system, which provides a convenient mechanism (qualified operator's list (NASA C–580) and the safety permit (NASA C–919)) for calling out conditions and qualifications pertaining to use. Since the RSO is a member of the evaluation committee that established the safety permit conditions, such requirements and qualifications related to radiation protection issues shall be considered to be approved by the RSO. The RSO might also be the approving authority on certain site-wide safety permits of limited scope. During this process, the RSO shall verify that RAM users had satisfied their initial and refresher radiation training requirements along with any other training or qualification requirements.

6.7.3 Safe Use of Radionuclides and Emergency Procedures

An operating procedure, which describes how and where the radiation source will be used, shall be submitted to the RSO (either directly or via the safety permit process). The level of detail of these procedures will vary depending upon the complexity of the activity. Procedures for the use of GL devices containing RAM might only include the manufacturer's instruction manual. For experiments involving radioactive sources, procedures shall be developed which address, in detail, what safety precautions are being taken and how the work will be done safely. These procedures shall be reviewed and approved by the RSO.

Depending upon the type, form, and activity of the source, emergency procedures might also need to be developed. Elements of emergency procedures involving spills or releases of RAM are summarized in Appendix **G**.

Again, these procedures would be considered part of the safety permit package.

6.8 Postings, Signage, Notifications, and Labels (*10 CFR 19 and 10 CFR 20*)

6.8.1 Postings for Workers

The following documents shall be posted in areas where licensed RAM are used or stored:

- NRC Form 3, Notice to Workers
- 10 CFR Parts 19, 20, 21, Section 206 Energy Authorization Act, procedures adopted pursuant to Part 21, and license documents (in lieu of posting these documents, a notice can be posted that identifies where said documents can be examined).

6.8.2 Reports to the NRC

The RSO shall submit reports to the NRC in accordance with 10 CFR 20.2201to 20.2204 as applicable for

- Theft or loss of material
- Notification of incidents such as high exposures or releases of material
- Reports of exposures, radiation levels, and concentrations of RAM exceeding limits
- Reports of planned special exposures

Specific time and reporting method requirements are identified in the regulations.

Requirements for notifications and reports related to dosimetry issues are summarized in the “dosimetry and dose limits” section (10 CFR 20.2205 and 20.2206)

6.8.3 Area Postings and Controls for Restricted Areas

Restricted, RAM, radiation, high radiation, very high radiation, and contamination areas shall be marked clearly with signs as designated by the RSO. The signage should also indicate any special requirements pertaining to the particular area. Standard signs prescribed by NRC and OSHA regulations are available from the RSO.

As needed, the RSO shall assure that routine surveys of restricted areas, including radiation and contamination surveys, are conducted at prescribed frequencies.

Smoking, eating, and drinking shall be prohibited in restricted areas.

6.8.4 Container Labels

Containers of licensed materials shall bear a durable, clearly visible label bearing the radiation symbol and an appropriate warning statement. The label should also include sufficient information regarding the contents so that individuals handling or using the containers, or working in the vicinity of the containers, can take appropriate action to avoid or minimize exposure (10 CFR 20.1904). Exemptions to labeling requirements are identified in 10 CFR 20.1905.

6.9 Radioactive Waste Management (*10 CFR 20*)

Radioactive wastes generated onsite shall be appropriately stored prior to disposal; shielding, posting or labeling, and security shall be considered. The RSO shall approve of all radioactive waste control procedures and corresponding facilities. Radioactive waste guidelines are provided in Appendix **K**. Disposal of RAM (liquids, solids, or gas) shall be coordinated with the SHED health physics function and shall be approved by the RSO. The RSO will work with the waste management group and the RAM shipper to ensure license conditions and regulations (NRC, DOT, and EPA) are satisfied.

6.10 Transportation of RAM and Wastes (*10 CFR 71, 49 CFR, Subpart H, and IATA DGR*)

6.10 – Documentation for shipments or RAM or radioactive wastes will be maintained on file by the RSO.

6.10.1 Transportation Regulations

There are three sources of regulations pertaining to the shipment of RAM and wastes:

- DOT: Title 49, Parts 171–185, Hazardous Materials Regulations
- NRC: Title 10, Part 71, Packaging and Transportation of Radioactive Material
- IATA: Dangerous Goods Regulations, Section 10—Radioactive Material

While the rules are somewhat similar, determining the appropriate set to follow depends upon factors such as the type and form of RAM, the amount of activity, the shipping container, and mode of shipment. The DOT probably serves as the regulatory authority for most shipments of RAM. For instances where the DOT regulations might not apply to a licensed RAM shipment, the requirements of the NRC's 10 CFR 71 would need to be satisfied. For air shipments of RAM, requirements specified by IATA's *"Dangerous Goods Regulations, Section 10—Radioactive Material"* would also need to be satisfied.

6.10.2 Shipment Coordination

All shipments of RAM and radioactive wastes shall be coordinated by the RSO.

Prior to shipment, the RSO shall receive a copy of the prospective recipient's materials licensee to ensure that they are, in fact, authorized to receive the RAM. This license and any supporting documentation must specify that the actual physical location receiving the RAM is authorized to posses the item(s). A copy of this record should also be maintained in the source transfer documentation of the RSO files.

The RSO will also work with the shipping office to discuss shipping options and other issues associated with upcoming shipments. The RSO or other SHED health physics representative shall prepare a NASA C–359, Radioactive Shipment Certification Record, in addition to a NASA C–727, Shipping Request Document, and shall provide them to the RAM shipper. This individual shall prepare the paperwork required for type of shipment identified.

6.10.3 Shipment Preparation

Packages for shipment shall satisfy DOT, NRC, and IATA (as appropriate) criteria for the type of shipment planned, and a copy of the shipping container's certification should remain with the source transfer documentation in the RSO files.

Classifications of shipments include those identified as limited quantities/excepted articles, low specific activity (LSA) objects, surface-contaminated objects (SCOs), Type A quantities, Type B quantities, and highway route-controlled quantities (HRCQ).

Packaging and shipping of certain materials, such as a Type B source, requires that the packager and shipper of record have a quality assurance (QA) program established per the NRC's 10 CFR 71.20. GRC does not have such a QA program, so any shipments of such materials would have to be packaged and shipped by a representative of an appropriately qualified contractor or by the Department of Energy.

Applicable guidance for the common RAM shipments from GRC is included in Appendix **H**.

6.10.4 Transportation of Portable Moisture/Density Gauge in a Government or Private Vehicle

When transporting a GRC portable moisture/density gauge in a vehicle on a public roadway (i.e. outside of either Lewis Field or Plum Brook Station), specific requirements must be followed to satisfy DOT and NRC regulations. Operating and emergency procedures associated with gauge use will outline the process to be followed, which includes the following general elements: preparation and labeling of package, driver hazmat training, package security and positioning during conveyance, transportation paperwork (i.e. bill of lading), and receipt inspection. The RSO will approve any such procedures.

6.11 Construction Contractor Use of Radioactive Sources (*10 CFR 34 and 10 CFR 30*)

6.11 – The RSO maintains copies of the temporary jobsite RT plans and/or Health and Safety Plans that have been approved along with any information that has been provided with the plan request.

6.11.1 Onsite Radiography

Contractors periodically use devices containing RAM to perform certain tasks. One such device would be the camera used when performing industrial radiography imaging of welds in piping systems, tanks, or other critical mechanical systems. This process relies on the energetic photons (i.e., gamma rays) from a radioactive source to x-ray the zone of interest. Iridium-192 and cobalt-60 are the two most common nuclear sources currently used by radiographers. Individuals performing source radiography shall have a radiography license issued by the NRC to perform such work at GRC, a Federal reservation. Alternatively, a state license with a reciprocity agreement from the NRC shall be acceptable. There are strict training and performance criteria and control requirements that must be satisfied to obtain such a license.

6.11.2 Portable Nuclear Moisture/Density Gauge Use

Construction engineering companies may also use portable density gauges, containing radioactive sources, usually cesium-137, americium-241, or possibly radium-226. These gauges are used to measure the density of soil, asphalt or other media. The latter two radioisotopes may be combined with beryllium metal, resulting in a neutron-emitting source that could be used for measuring moisture content in a material such as soil. Gauge users shall have a RAM license issued by the NRC, or alternatively, by a comparable state agency with an NRC reciprocity agreement. Again, there are license conditions that must be satisfied to use the gauges; although, these requirements are not as rigorous as those associated with the radiography process. The construction contractor shall be responsible for the safe use and storage of the density gauge. When not in use, the device should be secured in an area away from heavy equipment to minimize the chance of a construction vehicle accidentally crushing or damaging the shielding such that the source becomes exposed or dislodged.

6.11.3 RSO Approval of Onsite Radiography and Density Gauge Use

Approval for performing the abovementioned activities or other contractor tasks involving RAM shall be obtained via SHeD's Health and Safety Plan (HASP) process, as described in Chapter **17**, Construction Safety, of the Glenn Safety Manual. Alternatively, a focused "radiation safety plan" may be submitted to the RSO when only radiological hazards posed by the activity. The RSO shall review and approve aspects of the contractor's HASP or "radiation safety plan" related to using RAM. More specific guidance on these construction activities and RSO approval is provided in Appendix **I**.

> ***Note:*** *The RSO's "approval" covers the radiation safety elements of the task; other industrial safety and environmental concerns should be covered within the HASP (e.g., scaffolding, working aloft, or disposal of chemicals.) Since, the radiographic testing (RT) or gauge-use contractor is often a subcontractor of another subcontractor, it would probably be appropriate to get them to sign off on the prime's HASP or get them to issue a letter (on company letterhead) indicating they will abide by the prime's HASP.*

6.12 Self-Luminous Exit Signs (*10 CFR 31.5, NUREG 1556-Vol. 16, and NPR 1800.1*)

6.12.1 Description

Self-luminous exit signs found throughout GRC utilize radioactive tritium gas and a phosphorous material to produce light. The type of signage offers an economical and effective means of satisfying life safety codes for occupied buildings. Tritium exit signs pose little or no threat to public health and safety and do not constitute a security risk. However, the NRC requires proper recordkeeping and disposal of all RAM. Proper handling and recordkeeping are important, because a damaged or broken sign could cause mild radioactive contamination of the immediate vicinity, requiring a potentially expensive cleanup.

6.12.2 Regulatory Licensing for Self-Luminous (or Tritium-Containing) Exit Signs

6.12.2.1 NRC License Type

The subject exit signs are considered GL devices because they are inherently safe enough to be handled or used by anyone with no radiation training or experience. Although purchasers, known as "general licensees," do not need authorization from the NRC to possess the signs, they are subject to certain regulatory requirements (10 CFR Part 31) regarding handling, transfer, or disposal of the signs. They are also subject to NRC inspection and enforcement action (including fines) for violating those requirements.

6.12.2.2 General License Conditions

The general licensee

- Shall assure that they maintain (i.e., not deface or remove) warning and instruction labels provided with the signs and that they comply with stated instructions and precautions on such labels
- Shall immediately suspend use of a sign if there is failure of, or damage to, or indication of possible failure of or damage to the shielding or containment of the radioactive tritium; properly dispose of the broken or damaged sign by transferring to an authorized recipient (i.e., specific licensee); and within 30 days, file an appropriate report to the NRC
- Shall not abandon the GL device
- Shall not export the GL device, except in accordance with NRC export rules
- Shall only dispose of signs by transfer to an authorized recipient (i.e., specific licensee) and within 30 days, file an appropriate report with the NRC
- Shall comply with NRC reporting requirements for radiological incidents or loss/theft of devices
- Shall appoint an individual responsible for having the knowledge of the appropriate regulations and requirements and the authority for taking required actions to comply with appropriate regulations and requirements

6.12.3 Management of Self-Luminous Exit Sign Inventory

Personnel working for the SSC responsible for maintenance and operation of institutional facilities shall be responsible for managing GRC's large inventory of tritium-containing exit signs. Center operations and project management personnel shall be aware of their responsibility to notify and coordinate with the SSC when signs are installed, moved, or taken out of service. Requirements for management of self-luminous exit signs are provided in Appendix **L** of this chapter.

6.12.3 – Inventories of Exit Signs are maintained by the SSC responsible for Center operations. The RSO will periodically call for this inventory, which will be put on file.

6.12.4 Disposition of Signs When No Longer Needed

Tritium-containing exit signs shall be properly disposed of when they are no longer needed or past their service life. Typically, the signs will be returned to their manufacturer for disposal. The SSC responsible for maintenance and operation of institutional facilities shall contact the RSO who will coordinate this transfer of signs as described in Appendix **L** of this chapter. The RSO shall the appropriate reports to the NRC per the guidance provided in NUREG–1556, Vol. 16, Appendix L.

6.12.4 – Documentation associated with the transfer of Exit Signs being returned to the vendor or, otherwise, disposed will be maintained as described in the Section on "Transportation of RAM and Wastes."

6.13 Smoke Detectors Containing RAM (*10 CFR 30*)

6.13.1 Description

Certain smoke detectors use small amounts of RAM as part of their particle ionization detection technology. There are two basics types of these units potentially in use at the Center: a low-voltage (and lower activity) version and a high-voltage (higher activity) version. Sample images are provided in Figure **2**.

Examples of Low-Voltage Type

High-Voltage Type Examples (two views of internal heads and one view of complete unit)

Figure 2.—Types of Smoke Detectors.

6.13.2 Licensing and Requirements

Possession and use of these ionization smoke detectors are exempt from NRC regulations (10 CFR 30, parts 15 and 20) provided that they are used as intended. Disassembly or alternate uses are not permitted.

6.13.3 Disposition When No Longer Needed

Personnel working for the SSC responsible for maintenance and operation of institutional facilities or the Center's operations, project, and systems management functions shall provide the RSO (or SHED health physics representative) with any ionization smoke detectors that have been removed from service and are no longer needed. Alternatively, these units may be processed through Code F waste management group, whose representatives shall deliver the units to the RSO.

6.13.3 – Documentation associated with the transfer of Smoke Detectors being returned to the vendor or, otherwise, disposed will be maintained as described in the Section on "Transportation of RAM and Wastes."

7.0 RECORDS (maintained by the RSO or health physicist unless otherwise noted)

- Annual occupational radiation worker training (completion and exam results).—Maintained in Agency online training application, SATERN.
- Other training records—Maintained in Agency online training application (SATERN), by SSC supervision, or the RSO.
- Contamination and radiation surveys
- Sealed source leak tests
- Instrument calibrations
- GL source inventory
- Licensed source inventory
- Radiation dosimetry reports and related records
- RAM receipts
- Radioactive waste disposals
- U.S. Nuclear Regulatory License 34–00507–16
- Unusual incident reports
- User radiological training and experience files

8.0 REFERENCES

Document Number	Document Name
10 CFR 1–199	Energy, Chapter 1, Nuclear Regulatory Commission
29 CFR 1910.1096	Department of Labor, Occupational Safety and Health Administration, Part 1910—Occupational Safety and Health Standards, Subpart Z – Toxic and Hazardous Substances, Section 1910.1096 – Ionizing Radiation

49 CFR 171–185	Department of Transportation, Chapter 1, Pipeline and Hazardous Material Safety Administration, Subchapter C—Hazardous Material Regulations, Parts 171-185
GLM–QS–1700.1	NASA Glenn Safety Manual, Chapter **1A**, Safety Permit System
GLM–QS–1700.1	NASA Glenn Safety Manual, Chapter **17**, Construction Safety
NPR 1800.1	NASA Procedural Requirement, NASA Occupational Health Program Procedures
	International Air Transport Association (IATA), Dangerous Goods Regulations, Section 10—Radioactive Material
NUREG–1556, Vol. 7	Nuclear Regulatory Commission, Consolidated Guidance About Materials Licenses—Program-Specific Guidance About Academic, Research and Development, and Other Licenses of Limited Scope
NUREG-1556, Vol. 1	Nuclear Regulatory Commission, Consolidated Guidance About Materials Licenses—Program-Specific Guidance About Portable Gauge Licenses
NUREG–1556, Vol. 16	Nuclear Regulatory Commission, Consolidated Guidance About Materials Licenses—Program-Specific Guidance About Licenses Authorizing Distribution to General Licenses
29 CFR 1926.53	Occupational Safety and Health Administration, “Construction Health and Safety Standards,” Section 1926.53-Ionizing radiation

APPENDIX A.—DEFINITIONS AND ACRONYMS

As low as reasonably achievable (ALARA).—Making a reasonable effort to maintain exposures to radiation as far below the dose limits as is practical (1) consistent with the purpose for which the activity is undertaken, (2) taking into account factors such as available technology and the economics of improvements with respect to their benefits, and (3) in relation to the performance of such activities for the public interest.

Activation.—The process of making a material radioactive by bombardment with neutrons, protons, or other nuclear radiations.

Authorized user (AU).—A person whose training and experience have been reviewed and approved by the Nuclear Regulatory Commission (NRC), who is named on the license, and who uses or directly supervises the use of licensed material.

Byproduct material.—(1) Any radioactive material (except *special nuclear material*) yielded in, or made radioactive by, exposure to the radiation incident to the process of producing or using special nuclear material; (2) The tailings or wastes produced by the extraction or concentration of uranium or thorium from ore processed primarily for its source material content, including discrete surface wastes resulting from uranium solution extraction processes. Underground ore bodies depleted by these solution extraction operations do not constitute byproduct material within this definition; (3)(i) Any discrete source of radium-226 that is produced, extracted, or converted after extraction for use for a commercial, medical, or research activity; or (ii) Any material that (A) Has been made radioactive by use of a particle accelerator; and (B) Is produced, extracted, or converted after extraction for use in a commercial, medical, or research activity; (4) Any discrete source of naturally occurring radioactive material (NORM), other than source material, that (i) The Commission, in consultation with the Administrator of the Environmental Protection Agency, the Secretary of Energy, the Secretary of Homeland Security, and the head of any other appropriate Federal agency, determines would pose a threat similar to the threat posed by a discrete source of radium-226 to the public health and safety or the common defense and security; and (ii) Is extracted or converted after extraction for use in a commercial, medical, or research activity.

Business Management System (BMS)

Certificates of Competent Authority (CoCA)

Code of Federal Regulations (CFR)

Contamination (radioactive).—The deposition of unwanted radioactive material on the surfaces of structures, areas, objects, or personnel.

Contracting office technical representative (COTR)

Dangerous goods regulations (DGR)

Decay-in-Storage (DIS)

Department of Transportation (DOT)

Dose, absorbed.—The amount of ionizing radiation energy absorbed in matter, including human tissue. The units of absorbed dose are the rad and the gray (Gy). 1 Gy = 100 rad.

Dose, equivalent.—The dose quantity used for radiation-protection purposes that takes into account the different effects observed in tissue for different types of radiation giving the same absorbed dose. The units of equivalent dose are the rem and the sievert (Sv). 1 Sv = 100 rem.

Dosimetry.—Equipment used for measuring and registering accumulated exposure to ionizing radiation. For the purposes of this chapter, these devices include personal monitoring devices such as thermoluminescent detectors (TLD), optically-stimulated luminescent detectors, self-reading dosimeters (SRD), film badges, or other new technologies as they become accepted by the radiation protection profession.

Environmental Protection Agency (EPA)

Emergency Preparedness Plan (EPP)

Extremity.—For dose purposes, this means hand, elbow, arm below the elbow, foot, knee, or leg below the knee.

Generally licensed (GL)

Glenn Research Center (GRC)

Health and Safety Plan (HASP)

High radiation area.—An area in which radiation levels could result in an individual receiving a dose equivalent in excess of 100 mrem in any 1 hr at 30 cm from the radiation source or from any surface that the radiation penetrates.

Highway route-controlled quantities (HRCQ)

Industrial radiography equipment.—A device using ionizing radiation (from either a sealed nuclear source or an x-ray unit) to examine (via real-time imaging, photographic film, or other imaging media) the macroscopic structures of material by nondestructive methods.

International Air Transport Association (IATA)

International Atomic Energy Agency (IAEA)

Ionizing radiation.—Any radiation (particle or wave) capable of displacing electrons from atoms or molecules, thereby producing ions. Examples include alpha particles, beta particles, gamma rays, x-rays, neutrons, high-speed electrons, protons, and other atomic particles.

Isotope.—One of two or more atoms with the same number of protons, but different number of neutrons, in their nuclei. Thus, carbon-12, carbon-13, and carbon-14 are isotopes of the element carbon, with the numbers denoting the approximate atomic weights. Isotopes have the same chemical properties, but, may exhibit different physical properties (i.e., C-12 and C-13 are stable, whereas C-14 is radioactive).

Lens dose equivalent (LDE).—The external exposure of the lens of the eye and is taken as the dose equivalent at a tissue depth of 0.3 cm (300 mg/cm^2).

Low specific activity (LSA)

NASA Procedural Requirement (NPR)

Naturally occurring or accelerator-produced radioactive material (NARM).—Any radioactive material found in nature or material made radioactive by activation caused by the charged particles of a particle accelerator. It does not include source or special nuclear material. The NARM category of RAM was widely used prior to the NRC redefining the term “byproduct material” in 2007. Before October 1, 2007, byproduct material did not include accelerator-produced radioactive material.

Naturally occurring radioactive material (NORM).—Any radioactive material found in nature. It does not include byproduct, source, or special nuclear material. NORM examples include radium-226 or unenriched natural uranium.

Nonoccupational radiation workers.—Individuals who handle RAM on an infrequent basis (shipping/receiving personnel), or personnel who may need to enter radiologically controlled areas to accomplish tasks that are unrelated to the source of radiation.

Nuclear Regulatory Commission (NRC)

NRC Form 3.—The Nuclear Regulatory Commission’s (NRC’s) “NOTICE TO EMPLOYEES,” which is subtitled “Standards for Protection Against Radiation (Part 20); Notices, Instructions and Reports to Workers; Inspections (Part 19); Employee Protection.”

NRC general license.—Authority to possess and use a device containing a radioactive source that is issued by the NRC for devices whose design and intended use satisfy requirements for inherent safety. Purchasers of such devices become general licensees and are subject to use conditions specified by the manufacturer.

NRC broad scope byproduct materials license.—Authority to possess and use a wide variety of byproduct RAM that is issued by the NRC to organizations possessing a large and dynamic inventory of byproduct materials (i.e., universities, certain research and development facilities, hospitals, etc.).

NRC limited scope (i.e., specific) byproduct materials license.—Authority to possess and use specifically identified byproduct RAM that is issued by the NRC to organizations possessing a relatively moderate and stable

inventory of byproduct materials. Specific scope licenses offer less flexibility than broad scope licenses, but have less stringent regulatory requirements to satisfy.

Occupational radiation workers.—Individuals who are assigned to duties that expose them to radiation from licensed or unlicensed RAM or sources. Use of a generally licensed (GL) device would not classify a user as an occupational radiation worker.

Occupational Safety and Health Administration (OSHA)

Quality assurance (QA)

Radiation area.—An area in which radiation levels could result in an individual receiving a dose equivalent in excess of 5 mrem in any 1 hr at 30 cm from the radiation source or from any surface that the radiation penetrates.

Radiation-generating equipment (RGE).—A machine or system that can generate or emit ionizing radiation during operation, except those that emit ionizing radiation only from radioactive material.

Radiation Safety Officer (RSO)

Radioactive material (RAM).—Materials that exhibit the property of radioactivity.

Radioactive materials area.—Any area where licensed RAM are used or stored in amounts exceeding 10 times the quantity of such material specified in 10 CFR 20, Appendix C.

Radioactive waste.—Radioactive material that is no longer usable and is being packaged and processed for disposal.

Radioactivity.—The process of undergoing spontaneous transformation of the nuclear, generally with the emission of alpha or beta particles, often accompanied by gamma rays.

Radiographic testing (RT).—Another phrase for industrial radiography.

rem.—The unit used for dose equivalent. The dose equivalent in rem is equal to the absorbed dose in rad multiplied by the quality factor. Also, 1 rem = 0.01 sievert.

Restricted area.—An area, access to which is limited for the purpose of protecting individuals against undue risks from exposure to radiation and radioactive materials.

Safety and Health Division (SHeD)

Self-luminous light sources.—Gas, powder, or paint containing a radioactive nuclide that is sealed and contained in a material that is strong enough to prevent leakage, during normal use and handling (e.g., exit signs, luminous switches, and instrument dials).

Self-reading dosimeters (SRD)

Shallow-dose equivalent (SDE).—The external exposure of the skin of the whole body or the skin of an extremity, is taken as the dose equivalent at a tissue depth of 0.007 cm (7 mg/cm^2).

Sievert (Sv).—The International System (SI) unit used for dose equivalent. The dose equivalent in Sievert is equal to the absorbed dose in Gray multiplied by the quality factor. Also, 1 Sievert = 100 rem.

Source material.—(1) Uranium or thorium or any combination of uranium or thorium in any physical or chemical form or (2) Ores that contain, by weight, 1/20 of 1 percent (0.05%), or more, of uranium, thorium, or any combination of uranium and thorium. Note: source material does not include special nuclear material.

Special nuclear material (SNM).—(1) Plutonium, uranium-233, uranium enriched in the isotope 233 or in the isotope 235, and any other material that the Nuclear Regulatory Commission determines to be SNM, but does not include source material or (2) Any material artificially enriched by any of the foregoing but does not include source material.

Support service contractor (SSC)

Surface-contaminated object (SCO)

Temporary job site.—Any location (i.e., in the field) where industrial radiography is performed other than permanent radiographic installations specifically designed for such activities.

Thermoluminescent detectors (TLD)

Total effective dose equivalent (TEDE).—The sum of the effective dose equivalent (for external exposures) and the committed effective dose equivalent (for internal exposures). This dose is commonly referred to as the "whole body dose."

Transportation index (TI)

Very high radiation area.—An area in which radiation levels could result in an individual receiving an absorbed dose in excess of 500 rad in any 1 hr at 1 m from the radiation source or from any surface that the radiation penetrates.

APPENDIX B.—RADIATION SAFETY OFFICER RESPONSIBILITIES

The Radiation Safety Officer (RSO) is appointed by the Director to implement the radiation protection programs at the NASA Glenn Research Center (GRC). The RSO's responsibilities shall include the following:

1. Administer and coordinate the radiation protection programs for all activities involving radioactive material (RAM) and ionizing radiation-generating equipment (RGE) and to ensure that the programs conform with Nuclear Regulatory Commission (NRC) and Occupational Safety and Health Administration (OSHA) regulations as well as NASA policy
2. Serve as the RSO for all NRC licenses issued to the GRC (other than the reactor decommissioning license) and determine compliance with license conditions
3. Provide health physics services and consultation to personnel at GRC; such services shall include the following:
    a. Provide, distribute, and maintain personnel radiation monitoring equipment (i.e., dosimetry); assess exposures recorded by such personal monitoring equipment; and maintain exposure records
    b. Coordinate the radioactive waste disposal program; provide, collect, store, and dispose of waste containers; monitor effluent; maintain filter systems; and maintain waste disposal records
    c. Supervise the performance of sealed source leak test and maintain inventories
4. Control all licensed radionuclides at GRC as follows:
    a. Review and approve all requests for procurement of RAM
    b. Assure that sources are properly represented on the Center's materials license
    c. Maintain an inventory of RAM at GRC and conduct physical inventories at least semi-annually to comply with license requirements
    d. Upon notification of receipt of RAM shipment, coordinate package survey(s) and open package in approved area and maintain material receipt records
    e. Authorize all transfers of RAM between Center locations
    f. Approve containers and locations for storage of all RAM
    g. Package or inspect packaging for all offsite transfers of RAM, survey packages, assure compliance with NRC and Department of Transportation regulations, and maintain shipment records
5. Conduct or coordinate training programs in radiation safety
6. Maintain all records related to the radiation protection programs
7. Terminate any activity involving RAM or ionizing radiation that is found to be a threat to health or property

APPENDIX C.—PROCEDURES FOR PERSONAL DOSIMETRY

Obtaining Dosimetry

Individuals needing radiation dosimetry shall contact the radiation safety officer (RSO). After satisfying training requirements and providing needed personal information, the individual will be issued their dosimetry and instructed on its use. New occupational workers shall also be required to provide the RSO with a record of occupational dose from previous employment. Information such as a new worker's accumulated dose for the current calendar year and any past "special exposures" will allow the RSO to appropriately manage their dose received in their inception year and over their career at the NASA Glenn Research Center (GRC).

Temporary Need for Dosimetry

Temporary monitoring devices can be issued to transient personnel who may be assigned short-term work in a radiologically-impacted area. The RSO shall evaluate the work area and assign monitoring devices as appropriate.

Specification of Dosimetry Type

The need for and type of radiation dosimetry assigned is based upon the characteristics of the ionizing radiation and the type of activity involved. Dosimeters are used to estimate an individual's radiation dose caused by external sources of radiation.

Use of Dosimetry

Whole Body

"Whole body" dosimeters are used to estimate the radiation dose delivered (externally) to the head, trunk, and thigh area of a worker. This region of the body includes the major organs and blood-forming areas that would be more susceptible to chronic radiation exposure effects. These badges also provide an estimate of the wearer's skin dose and the dose to their eye lens. The whole body badge shall be worn in its holder on the front of an individual's body between their head and waist.

Self-Reading

Self-reading dosimeters (SRDs) are used to provide a real-time estimate of an individual's dose to x-rays or gamma rays. SRDs are typically worn in addition to an individual's whole body badge when that individual could be involved in an activity involving higher dose rates. The self-reading dosimeter shall be worn similarly to the whole body badge. SRDs are to be checked by the user periodically during the exposure event to keep tabs on a worker's accumulated exposure. The dose estimated from an SRD is used for guiding actions during an exposure scenario. The SRD dose does not typically become the individual's official dose of record.

Ring and Extremity Badges

Ring and extremity badges may be specified for activities where a worker's hands come in closer contact to the field of ionizing radiation than their body. Ring badges have higher detection thresholds than whole body badges and, along those lines, exposure limits for extremities are an order of magnitude greater than whole body limits.

Notify the RSO Immediately

There are certain situations where dosimetry wearers shall immediately notify the RSO. Users would need to provide a written account detailing the event, who was involved, when did it occur, what were the radiation characteristics, how long, etc. Situations would include, but are not limited to

Lost Dosimetry.—If you were unable to find your badge following its use for exposure monitoring.

Damaged Dosimetry.—If your badge's physical integrity was compromised.

Irradiated While Not in Use.—If your badge was dropped in an area that subsequently received a high radiation dose.

Forgot to Wear a Badge.—If you were proceeding in performing dosimetry-required activities without being monitored.

Involved in a Potential High Exposure.—If you suspect you might have received an acute high dose.

In all but the last of these scenarios, the user would be assisting the RSO in finding a way to estimate the individual's true dose for the exposure scenario. Notification in a potential high dose incident is needed to manage the affected individual's dose(s).

Additional Requirements for Dosimetry Users - Dosimetry Users shall:

- Wear your dosimeter as specified for the work being performed.
- Know where your dosimeter(s) is at all times.
- Use only the dosimeter assigned to you.
- Use your assigned dosimeter only at GRC's Lewis Field or Plum Brook Station and only in the areas for which it was assigned.
- Never intentionally irradiate your dosimeter to check the accuracy of the radiation safety process.
- If you have a medical procedure requiring the use of a radioactive tracer, contact the RSO and do not wear your dosimeter until the tracer has dissipated.
- Consult with the RSO regarding any concerns or questions on the use of dosimetry or the dosimetry program.

Dosimetry Records

Dosimetry reports are on file with the RSO. As required by 10 CFR 19.13; program participants shall receive an annual record of their dose and shall be advised to keep such records for their personal use.

APPENDIX D.—CONTAMINATION CONTROL GUIDELINES

Personnel Contamination and Personal Protective Equipment (PPE)

1. Individuals shall wear impermeable gloves (i.e., latex, nitrile, etc.) while working with radioactive material (RAM). Gloves are to be removed when work is completed. Gloves that are suspected of being contaminated should be isolated, and the radiation safety officer (RSO) should be contacted.
2. All persons working with RAM where personal contamination is possible shall wash their hands thoroughly before leaving the work area. If directed by the RSO, monitoring equipment shall be utilized to verify removal of contamination.
3. The user shall immediately contact the RSO or their designee if personnel contamination is suspected.
4. Open wounds shall be dressed and covered by impermeable PPE when working with RAM of any form.

Personnel Decontamination

In general, any contamination of body surfaces shall be addressed by prescribed decontamination methods. Such activities should be performed by or under the supervision of the RSO or a Safety and Health Division (SHeD) health physics representative. Decontaminating agents and methods may become increasingly abrasive depending on the type and level of contamination present.

Here are some initial precautions that can be taken until a radiation safety specialist arrives at the location:

1. Take steps to prevent the spread of contamination, such as isolating the area, and if liquids are involved, place absorbent material over any spills.
2. Determine the areas of contamination on the individual with the use of monitoring equipment or survey instruments, if available.
3. Decontamination of wounds shall be done under the supervision of a physician.
4. The adhesive backing of duct tape (or similar) can be used as a preliminary method to remove contamination from skin or clothing.
5. Skin areas that are contaminated shall be lathered for **3 minutes and repeated three to four times** (use lukewarm water).
6. After the decontamination process has been completed, the individual shall take a thorough shower, giving special attention to the hair, hands, and fingernails.

Area Contamination

1. Removable contamination shall not be tolerated on exposed surfaces, such as bench tops and floors and shall be removed as soon as possible, or the area shall be isolated. Small amounts of fixed contamination may be unavoidable at times, but the degree of such contamination shall be kept as low as possible.
2. The RSO shall assure the surveys of contamination levels are scheduled and that these levels do not exceed the limits established in this program.
3. Any operations involving gaseous, finely divided, or particulate RAM shall be carried out in an appropriately designed laboratory hood, glove box, or similar equipment approved by the RSO.
4. The user shall immediately contact the RSO or their designee whenever contamination is suspected.

Contamination Limits

Unrestricted Use

Contamination found in unrestricted areas shall be immediately decontaminated to background levels, if possible. When such levels are not feasible, the contamination levels observed should at least be less than the limits specified in the table below. This table conservatively summarizes applicable guidance from NUREG–1556, Vol. 7, and Regulatory Guide 1.86. Note that the isotopic variation in allowable contamination levels identified within these two references is not reflected within the table; rather, a more conservative limit is identified to simplify the survey process. If required, a more sophisticated contamination assessment could be conducted under the direction of the RSO.

TABLE D.1.—MAXIMUM PERMISSIBLE CONTAMINATION LEVELS FOR UNRESTRICTED USE

Surface	Fixed		Removable	
	Alpha[a], dpm/100 cm^2	Beta-Gamma[b] (dpm/100 cm^2)	Alpha[a] (dpm/100 cm^2)	Beta-Gamma[b] (dpm/100 cm^2)
Equipment, articles, tools, etc.	100 average[c] 300 maximum[d]	5000 average[c] 15 000 maximum[d]	20	1000
Building surfaces, bench tops, floors, etc.	500	5000	50	500

[a]Higher limits may be allowed for alphas from U-natural, U-235, U-238, and associated decay products per Regulatory Guide 1.86, Table 1. Contact RSO for clarification.
[b]For Sr-90 and isotopes of iodine, see limits specified in NUREG–1556, Vol. 7, App. Q. Contact RSO for clarification.
[c]Measurements of average contaminant should not be averaged over more than 1 m^2.
[d]The maximum contaminant level applies to an area of not more than 100 cm^2.

APPENDIX E.—SUMMARY OF RADIOLOGICAL SURVEY REQUIREMENTS

Source Leakage Tests

Sealed sources shall be leak tested in accordance with Nuclear Regulatory Commission (NRC) license conditions or applicable sealed-source device registry criteria. Generally licensed (GL) devices shall be leak tested in accordance with the NRC's or the manufacturer's stated wipe test criterion. The method for monitoring any removable activity shall be capable for detecting the type of emission(s) expected from the subject radioisotope and shall have a detection limit of at least 5 nanocuries. The RSO shall establish the required periodicity for conducting such tests and specify the monitoring method to be used.

Area Radiation Surveys

Radiation surveys shall be conducted in areas where radioactive material (RAM) is present and should be repeated whenever the source term in the area changes significantly. These surveys are conducted to verify the adequacy of shielding and other established engineering controls.

Area Contamination Surveys

Periodic contamination surveys shall be conducted in areas identified by the radiation safety officer (RSO) to ensure that radioactivity is being adequately controlled. The method and frequency of survey will depend on the form of the RAM and the activities taking place.

Radiography Radiation Surveys

Contractor radiographers shall perform monitoring during radiography activities to comply with their license and other regulatory requirements. The RSO or Safety, Health and Environmental Division (SHED) health physics representative may observe such activities, if performed during normal working hours, and shall verify the proper establishment of the 2 mrem/hr boundary.

APPENDIX F.—MATERIAL RECEIPT AND ACCOUNTABILITY

Receiving Radioactive Material (RAM) Packages

The following procedures apply to the NASA Glenn Research Center (GRC) Receiving Office staff at Lewis Field or Plum Brook Station who will be processing the receipt of "labeled" packages containing RAM. "Labeled" refers to the Department of Transportation (DOT) shipping labels for RAM (i.e., White 1, Yellow II, or Yellow III). Receipt of RAM received under "excepted" classifications, are subject to more relaxed receipt procedures.

> ***Note:*** *Labeled RAM packages delivered to Lewis Field shall be "received" at Building 215. Other, non-labeled radioactive materials packages delivered to Lewis Field can be received at either Building 21 or 215. Plum Brook Station will receive all packages at Building 9209.*
>
> ***Note:*** *A sign is posted in the Receiving area with examples of radioactive labels to look for on the packages and an explanation of what the labels mean.*
>
> ***Note:*** *GRC does not have an afterhours shipping and receiving process.*

During normal working hours, immediately upon receipt of any labeled package of RAM, Receiving Office personnel shall visually inspect each package for any signs of shipping damage such as crushed or punctured containers or signs of dampness. Any obvious damage shall be reported to the RSO or other designated Safety and Health Division (SHeD) employee **immediately** (see contacts below). (If needed, the Emergency Dispatcher can be called and asked to make contact with the RSO or SHeD Staff.) Workers shall be kept away from the location of the damaged package and the parcel shall not be moved or touched. In addition, the person delivering the damaged package shall be asked to remain at the dock area until that individual and their vehicle can be appropriately monitored. Efforts shall be made to limit the potential spread of contamination from the suspected leaking package.

Receiving Office personnel shall notify the RSO or other designated SHeD employee upon the receipt of a package containing RAM or sources. SHeD health physics staff are required to monitor the package within 3 hours of receipt. For deliveries that occur after core working hours, the notification can be made at the start of the next work day. The Receiving Office shall **first** notify a SHeD health physics contact, regardless of to whom the package is addressed. The SHeD health physics representative will pick up the package and notify the addressee after all license and regulatory requirements have been met.

SHeD Health Physics Contacts (in order of notification priority):

Chris Blasio, Radiation Safety Officer	433–6520, cell 216–903–9971
Richard Miller, Environmental Protection Specialist	433–3780, cell 216–403–8170

Picking Up RAM Packages for Delivery to Building 49

SHeD health physics personnel will report to the Receiving Department location with a radiation survey meter and wipe test supplies. Procedures for handling RAM packages prior to delivery to Building 49 shall be as follows:

> ***Note:*** *Record all survey measurements and information using the GRC Radiological Survey Form.*

- Wear gloves (latex, nitrile, etc.) when handling packages to prevent potential hand contamination.
- Visually inspect the package for any sign of damage (e.g., crushed, punctured, and dampness). If damage is noted, stop and notify the RSO.
- Measure the dose rate from the package at 1 meter and at the package surface. If it is higher than expected, stop and notify the RSO. The expected dose rate in mrem/hr at 1 m should be close to the "transportation index" value noted on the package label. The expected maximum dose rates (mrem/hr) at the surface of the package are as follows: 0.5 for White I, 0.5 to 50 for Yellow II, and 50 to 200 for Yellow III.

  STOP POINTS: >10 mrem/hr at 1 m, or >200 mrem/hr on contact; call RSO immediately and do not open package.

Note: *The final delivery carrier and Nuclear Regulatory Commission (NRC) Operations Center (301-816-5100) must be immediately notified by telephone if the radiation survey results for the package exceed the levels identified in 10 CFR 71.14.*

- Wipe at least 100 cm^2 of the exterior surface of the package and analyze the wipe.

  STOP POINTS: >22 dpm/cm^2 alpha or >220 dpm/cm^2 beta-gamma; call RSO immediately and do not open package.

  Note: *The final delivery carrier and NRC Operations Center (301-816-5100) must be immediately notified by telephone if the contamination survey results for the package exceed the levels identified in 10 CFR 71.87(I).*

- Using good lifting techniques and requesting help as needed, deliver package to building 49.

Opening RAM Packages

SHED health physics personnel are responsible for opening RAM packages. Unless otherwise directed by the RSO, such packages will be opened in room 3 or 4 of building 49 or in the source storage area (i.e., beamroom) of building 140. Procedures for opening RAM packages shall be as follows:

Note: *Record all survey measurements and information using the GRC Radiological Survey Form.*

- Wear gloves (latex, nitrile, etc.) when handling packages to prevent potential hand contamination.
- Remove the packing slip.
- Open the outer package following the supplier's instructions, if provided.
- Open inner package and verify contents with packing slip and label on container.
- If the contents, packing slip and label do not match or exceed possession limits, contact the RSO immediately.
- Inspect the source container for damage, loss of liquid, or discoloration of packing material.
- Survey packing material and package before disposal. If contaminated, dispose of as radioactive waste. If not contaminated, remove or obliterate radiation labels and dispose of in the regular trash.
- For sealed radioactive sources, or, devices containing such sources, perform a source leakage test. As appropriate, follow manufacture's guidance on performing such contamination surveys.

APPENDIX G.—EMERGENCY PROCEDURES

Incident Involving Radioactive Releases or Spills

All emergencies in areas where RAM are being used shall be reported by dialing 911 to contact Glenn's Lewis Field or Plum Brook Station's Dispatch. If using a cell phone, individuals making such a report should call 216-433-8888 when at Lewis Field and 419-621-3222 when at Plum Brook Station. The dispatcher shall immediately initiate contact with the Radiation Safety Officer (RSO) or other Safety and Health Division (SHeD) personnel identified in ANNEX L of the Center's Emergency Preparedness Plan (EPP) when at Lewis Field and the Emergency Action Procedures when at Plum Brook Station.

Procedures for the Radiation Worker

- Notify all personnel in the area that a spill has occurred.
- Confine all movement that may spread contamination.
- Seal off all ventilation to minimize the potential release of airborne particles.
- Lock the room or barricade the area.
- Notify the RSO or SHeD health physics representatives.

Procedures for the SHeD Health Physics Personnel

- Stop the release of RAM from the source and shield as appropriate.
- Shield the source if this can be done without significant increase in direct radiation exposure, or cover the area with absorbent material. (Appropriate shielding shall be determined by the RSO or health physics representative.)
- Contaminated clothing shall be removed as soon as possible and placed in a plastic bag.
- Skin shall be flushed with lukewarm water and then washed with soap and water (see Appendix **D**).

Incident Involving a Stuck Radiography Source

The Construction Contractor Radiographer shall initiate their written emergency procedures and any other actions identified in their Health and Safety Plan (HASP). This shall involve contacting the Lewis Field or Plum Brook Station Dispatcher, who, in turn shall immediately contact the RSO or other SHeD personnel identified in ANNEX L of the center's EPP for Lewis Field and the Emergency Action Procedures for Plum Brook Station. Since two licensed personnel are required when performing radiography, at least one should be available to initiate this sequence of events, even if their partner is incapacitated.

Incident Involving an Injured Radiography Contractor and a Nonhoused Source

The Construction Contractor Radiographer shall initiate their written emergency procedures and any other actions identified in their HASP. This shall involve contacting the Lewis Field or Plum Brook Station Dispatcher, who, in turn shall immediately contact the RSO or other SHeD personnel identified in ANNEX L of the Center's EPP for Lewis Field and the Emergency Action Procedures for Plum Brook Station. Since two licensed personnel are required when performing radiography, at least one should be available to initiate this sequence of events and house the source within its shielding, even if their partner is incapacitated. If housing the source was not possible or was delayed, treatment of acute injury or illness shall not be delayed because of radiation levels anticipated in such a situation.

Incident Involving Nuclear Gauge Damaged by Heavy Equipment

The construction contractor or NASA employee using the nuclear moisture/density gauge shall initiate their written emergency procedures and any other actions identified in their HASP or safety permit. This shall involve contacting the Lewis Field or Plum Brook Station Dispatcher, who, in turn shall immediately contact the RSO or other SHeD personnel identified in ANNEX L of the Center's EPP for Lewis Field and the Emergency Action Procedures for Plum Brook Station. In general, the workers shall follow the spill response actions described above, keeping the area isolated and minimizing the spread of potential contamination by securing the heavy equipment that crushed the gauge.

APPENDIX H.—TRANSPORTATION OF RADIOACTIVE MATERIAL

As discussed in the chapter, the Department of Transportation (DOT) and the International Air Transport Association (IATA) are regulatory authorities for most radioactive material (RAM) shipments likely to be made by the NASA Glenn Research Center (GRC). The Nuclear Regulatory Commission's (NRC) 10 Code of Federal Regulations (CFR) 71.5(b) states that if DOT regulations are not applicable to a shipment of licensed RAM, the licensee is required to comply with the NRC regulation, in 10 CFR 71.5(a), which state that licensees who transport "licensed material" to a location outside of the site where it is being used, shall conform to the standards and requirements in 49 CFR Parts 170 to 189 to the same extent as if the rules were applicable.

Guidance summarizing the DOT requirements is as follows:

- Licensee Documentation Requirements (described in text of main chapter)
- Shipping Container Certification Document Requirements (described in text of main chapter)
- Classification

There are different levels of DOT requirements regarding shipment classification. These include

Note: The definition and understanding of the terms "Special Form" or "Normal Form" (173.403 and 173.469) are crucial to classifying packages. The "special form" designation indicates that the source encapsulation is strong or robust enough to satisfy a series of physical tests. Such classification is indicated by a certification for the source encapsulation, which typically is issued by a country's Competent Authority for the purposes of the Regulations of the International Atomic Energy Agency (IAEA). In the United States, such Certificates of Competent Authority (CoCA) are issued by the DOT and in Great Britain, these CoCAs are issued by the Secretary of State for Transportation. Copies of this certification should be submitted with the shipping paperwork and maintained in the RSO's files for transferred sources.

- Exemptions.—If quantity or form is not considered a hazardous material, the shipment is exempt from DOT rules.
- Excepted packages.—If the quantity or material or its housing within an instrument or article satisfy requirements stated within 49 CFR 173.421–426, then that shipment is thought to pose minimal hazard and may be shipped using relaxed DOT rules therein identified. Another category of excepted packages are shipments of empty packages used to ship radioactive sources (173.428).
- Type A Quantity.—The A_1 and A_2 quantities found within 173.435 indicated the maximum quantities that can be shipped in a "Type A" package for special form and normal form sources, respectively.
- Type B Quantity.—Quantity of RAM that exceeds the A_1 and A_2 quantities found within 173.435 for special form and normal form sources, respectively.
- Highway Route Controlled Quantity.—Quantity of RAM that exceeds 3000 times the A_1 and A_2 quantities found within 173.435 for special form and normal form sources, respectively.
- Low specific activity (LSA) and surface-contaminated objects (SCOs).—Specials categories of shipments that allow for relaxation of DOT rules based upon the reduced hazard associated with shipment.

The RSO shall determine the appropriate item classification.

Radiological Surveys and Radiation Limits

Generally, radiation dose rates at package surfaces and at 1 meter from the package surface shall be limited to 200 mrem/hr and 10 mrem/hr, respectively. If these levels are exceeded that package shall be shipped "Exclusive Use" and shall not be transported by aircraft. "Exclusive Use" shipments are subject radiation limits specified in 49 CFR 173.441(b).

The radiation level measured at 1 meter from the package surface is used to determine the "Transportation Index," or "TI," of the package. Simply put, the TI is the maximum dose rate in mrem/hr (rounded to the nearest tenth) measured at 1 meter from the package surface. If the dose rate is less than 0.05 mrem/hr, then the TI is defined to be 0.

Levels of nonfixed (removable) surface contamination on the package must be kept as low as reasonably achievable (ALARA) and are not permitted to exceed the limits identified in 49 CFR 173.443. The contamination wipe surveys shall be taken over an area of at least 300 cm^2. The allowable limits are 22 dpm/cm^2 for beta and gamma emitters (and low toxicity alpha emitters), and 2.2 dpm/cm^2 for all other alpha-emitting radionuclides.

Packaging

Packaging requirements are specified based upon the classification of the source as well as its physical form (i.e., solid, liquid, and gas), and even the mode of transportation. General package design requirements are specified in DOT 49 CFR 173.410 and include considerations for handling, lifting, securing for shipment, ability to decontaminate, water shedding, durability against forces experienced during shipping, chemical compatibility with contents, and pressure and temperature extremes for air transportation. Additional design and testing requirements apply to packages identified as “Type A” (173.412 and 415) or “Type B” packages (173.413 and 416).

Marking

Type A: Packages shall be marked with the proper shipping name and identification number (e.g., “Radioactive material, special form, n.o.s., 7, UN2974). Be sure to consult with the current DOT (49 CFR 172.3xx, Subpart D) or IATA shipping names, as appropriate, since these categories are revised periodically. The RAM shipper is responsible for identifying the correct shipping name. Other requirements include “Type A” marking, and an “RQ” marking if a “reportable quantity” of a radioisotope is being shipped. Air shipment packages are also required to be marked with the name of the packaging manufacturer. Finally, Type A shipments shall be marked with the name and address of the consignee or consignor (both for air shipments).

Labeling

Package labeling provides information about the sources within the package, their corresponding activities, and the radiation levels measured at 1 m from the package. Isotopes can be identified as Cesium-137 or Cs-137. Activities must be provided in S.I. units (i.e., Becquerels), although shippers also commonly include the activities in Curies within parentheses. For multiple sources shipped within the same container, the label must include the identification of the isotopes that comprise 95 percent of the total activity. For air shipments, the label should also break down the activity contact by isotope. The radiation level required on the label is also known as the TI.

There are three primary labels used on RAM and their selection is based upon the package surface radiation levels and the TI. The shipper must affix two White I, Yellow II, or Yellow III labels on opposite sides of the container (not the bottom) near the marked proper shipping name.

Label type	Surface radiation level, mrem/hr	Transportation index
White I	Up to 0.5	N/A
Yellow II	>0.5 to 50	>0 to 1.0
Yellow III	>50 to 200	>1 to 10
Yellow III, Exclusive Use	>200 to 1000	>10

Other labeling requirements or considerations include:

- “Cargo Aircraft Only” label for packages authorized for cargo aircraft transport
- Subsidiary Hazard labels for other hazards associated with the package
- Unlawful to transport a package bearing a label unless the package contains the hazardous material and the label represents the hazard presented by the material present
- Shipping Papers

The following information must be included within the shipping paperwork for a Type A shipment:

- Proper shipping name, hazard class, and UN number
- Name of each radionuclide as listed in 49 CFR 173.435. (172.203(d)(1) and (2))
- Description of the physical and chemical form of the RAM (172.203(d)(3))
- For air transport, the statement "All packed in one type A container" should follow the entries
- If applicable, "RQ" (reportable quantity) must appear before or after the basic source description (172.203(c)(2))
- Activity in SI units (i.e., Becquerels) (172.203(d)(4))
- Category of the label applied to the shipment (172.203(d)(5))
- Transportation Index (172.203(d)(6))
- For air transport, the dimensions of the package
- For air transport, "Cargo Aircraft Only" statement on shipping paper if found on package (172.203(f))
- Shipper's certification statement and signature (172.204(a) and (d))
- Statement "Exclusive Use Shipment" if applicable

Emergency Response Information (49 CFR 172.6xx, Subpart G)

Emergency response information for RAM being shipped shall be maintained by the carriers transporting the hazardous material along with the facility operators who receive, store, or handle the hazardous material during the transportation process. The information shall be immediately available to vehicle operators, pilots, etc., or facility personnel, and is required to be on-hand as long as the RAM is in transit. The information is provided to mitigate an incident involving RAM and must include (1) a description and technical name of the material, (2) immediate hazards to health, (3) risks of fire or explosion, (4) immediate precautions to be taken during accident, (5) immediate methods for handling fires, (6) initial methods for handling spills, and (7) preliminary first air measures.

The party offering the material for shipment shall also provide a 24-hour emergency response telephone number for use in the event of an emergency involving the hazardous material. This number shall be monitored as long as the RAM is in transit and shall connect the caller with a person who has specific knowledge of the RAM in shipment, or with access to someone with specific knowledge.

The information shall be printed legibly in English and be available for use away from the RAM package. The information could be presented (1) on a shipping document, (2) on another document providing the required information (e.g., "material safety data sheet" or similar), or (3) in an emergency response guidebook document that is referenced in the shipping paperwork.

Placarding (49 CFR 172.5xx, Subpart F)

Vehicle placards shall be utilized on the following shipments of RAM:

- Yellow III shipments
- Yellow III exclusive use shipments
- LSA and SCO exclusive use shipments
- Highway route-controlled quantity shipments (black-bordered placard)

Placards shall be placed on the front, back, and two sides of the vehicle.

Special Classifications

Certain RAM or items containing RAM can be grouped into "Excepted (Limited) Quantity" categories (49 CFR 173.421–126). These classifications permit the package to be excepted from specific packaging, marking, labeling, shipping paper, and certification requirements as long as the item is not considered hazardous waste. Note, that excepted does not mean exempted. These categories include the following: Limited quantity radioactive sources, radioactive instruments and articles, and articles containing natural uranium or thorium. A related category of excepted packages are shipments of empty RAM packaging (173.428). Specific requirements for each category are provided in the referenced regulations.

The shipment of LSA and SCOs is to be conducted in accordance with the requirements specified in 49 CFR 173.427. Persons desiring to ship using these relaxed rules must ensure their material meets the definition of either LSA or SCO.

APPENDIX I.—GUIDANCE FOR CONSTRUCTION CONTRACTOR USE OF RADIOACTIVE SOURCES

Note: *The Radiation Safety Officer's (RSO's) approval on a Health and Safety Plan (HASP) covers the radiation safety elements of the task; other industrial safety and environmental concerns should be covered within the HASP (e.g., scaffolding, working aloft, and disposal of chemicals). Because the radiographic testing (RT) or portable gauge contractor is often a subcontractor of a subcontractor, it would probably be appropriate to get them to sign off on the prime's HASP or get them to issue a letter (with company letterhead) indicating they will abide by the prime's HASP.*

Note: *If the RT elements of a job were not addressed in the original HASP, an addendum to this HASP or a radiation safety plan could be submitted by or on behalf of the RT contractor. For the purposes of this document, the use of "HASP" may also refer to a radiation safety plan or HASP addendum.*

Industrial Radiography

Note: *Consideration of the specific area where the radiography is to be performed shall be demonstrated within the proposed plan. Preferably, this familiarity is garnered by the RT company representative working with the hiring contractor, Facilities Division representative, RSO and, possibly, the building manager.*

- A copy of the construction contractor's Nuclear Regulatory Commission (NRC) radiography license shall be included with the Health and Safety Plan (HASP) or otherwise provided to the Radiation Safety Officer (RSO).

  Note: *As a Federal facility, GRC falls under the jurisdiction of the NRC. Radiography companies shall possess an NRC license or NRC reciprocity for their state license.*

- The HASP for the radiography activity shall demonstrate specific knowledge about the planned shots, how they will be conducted safely, and what coordination issues might exist (i.e., impact on NASA Glenn Research Center (GRC) employees or other construction contractors working in the nearby vicinity). Some considerations include location and orientation of the planned shots, building and room layout, building construction materials, building occupancy, and employee work schedules.
- The HASP should include a diagram or map showing the location of the 2 mrem/hr isodose line. Assumptions used in establishing this boundary should be identified in the HASP or its attachments. Alternatively, a written description of the exclusion area is permissible.
- Areas that need to be evacuated during the radiography shots along with how such areas are to be secured shall be identified in the HASP. Coordination with other workers may involve working with the appropriate building manager, facility manager, or the construction/project manager. Industrial radiography is commonly performed on off-shifts or over the weekend.
- Any other necessary special controls to be implemented during radiography activities shall be described in the HASP.
- The HASP shall list emergency contact numbers for the contractor's RSO and the GRC RSO (dispatch).
- The radiographer shall comply with all conditions of their radiography license. Required records (training, procedures, license, etc.) shall be made available to GRC personnel when the contractor is onsite. The RSO can also ask for such documentation during the HASP review and approval process.

Portable Gauge Use

- A copy of the construction contractor's radioactive material (RAM) license shall be included with the HASP or otherwise provided to the RSO.

  Note: *As a Federal facility, GRC falls under the jurisdiction of the NRC. Radiography companies shall have an NRC license or NRC reciprocity for their state license.*

- The HASP shall include the current training record(s) for the proposed operator(s).
- The HASP shall include the current source leak test results for the instruments to be used.
- The HASP shall include the following elements:

  - If needed, consideration of how the gauge activities might impact GRC employees or other construction contractors working in the nearby vicinity
  - A description of any necessary controls to be implemented during gauging operations
  - Emergency contact numbers for the contractor's RSO and the GRC RSO (dispatch)
- In addition, emergency and operating instructions shall be kept with the gauge at all times.
- If the gauge is damaged, stolen, or lost the contractor shall contact the GRC RSO and their company's RSO immediately.
- The following are radiation safety and source security actions that will prevent access by unauthorized personnel and minimize radiation exposure to members of the public:
  - Physically watch the gauge when it is in use
  - Never leave the gauge unattended when not in use
  - Store the gauge in a locked area
  - At field locations, lock the gauge in the trunk of a vehicle, or secure with a lock and chain if the gauge is kept in an open truck bed

APPENDIX J

INFORMATIONAL BRIEFING SHEET FOR OVERSIGHT OF RADIOGRAPHIC TESTING

Informational Briefing Sheet for Oversight of Radiographic Testing (rev. 11/08)

Radiographic Testing (RT), or Industrial Radiography, is a non-destructive test method typically used for the macroscopic examination of metal structures or welds. High-energy photons (either gamma-rays or x-rays) are used to examine a target zone with the resulting image being imparted onto either photographic film or a digital image capturing device. Regardless of the photon type (either gamma-rays or x-rays), the action is herein described as an "exposure event" or "exposure shot." In most instances, the industrial radiography will involve the use of gamma rays from a radioactive source such as Iridium-192 or Cobalt-60 (denoted here as "GAMMA"). Lower energy photons from x-ray tubes may be needed when performing industrial radiography on light metals and other less-dense materials. (denoted as "X-RAY")

The NASA organization (civil service or support-service contractor) responsible for bringing in the radiographer shall have a representative onsite for oversight of and coordination with the RT contractor. As the NASA entity coordinating this activity on behalf of the subcontractor, there are certain basic requirements that you shall to be aware of: (if neither GAMMA nor X-RAY are denoted, then the requirement applies to BOTH.)

- Security shall be notified in advance of the arrival of the RT contractor.
- The RT contractor shall have an approved Radiation Safety Plan or a Health and Safety Plan (HASP) that covers the scope of the proposed work. (e.g., addendum for the radiography)
- At least two (2) individuals from the RT contractor shall be present; one of these persons is the "radiographer" while the other is the "radiographer's assistant."
- In addition to following specific regulations concerning the radiation aspect of the job, the RT contactors shall obey all pertinent industrial safety (i.e., OSHA) requirements, such as those for personal protective equipment, ladder safety, scaffolding, working aloft, confined space, etc. These elements of work safety are to be addressed in the HASP.
- The "camera," which contains the radioactive source, shall be under the direct surveillance of the radiographer or their assistant once it has been removed from their truck (GAMMA). Similarly, the x-ray tube/controller, when unlocked, must be under the direct surveillance. (X-RAY)
- The RT contactors shall use a <u>whole body dosimeter</u> (e.g., TLD or film badge) AND a <u>direct-reading dosimeter</u> (GAMMA and X-RAY). For radioactive source-based radiography, each RT contractor must ALSO use an <u>alarming doserate meter</u> (GAMMA).
- The RT contractor shall establish the exclusion zone prior to the exposure events. This includes setting up barricades, posting warning signs and verifying that the area is clear of other people. ONLY the RT contactors are permitted within the exclusion zone during exposure shots.
- While performing exposure shots, BOTH of the RT contractors shall be present with one controlling the camera/x-ray tube and the other watching to ensure the exclusion area is not violated.
- After each exposure event, the RT contractor shall use a <u>radiation survey meter</u> to verify that the source is properly housed in the shielded "camera" (GAMMA) or that the x-ray tube is de-energized (X-RAY)
- The RT contractor's truck contains a film development laboratory. Fluids shall not be dumped onto GRC property.

If you observe the Industrial Radiographer contractor violate these requirements or if you have concerns about how they are performing their work, you are to confront them with your concerns. If you continue to have such concerns, contact security dispatch at 216.433.2088 and ask to have the Glenn Radiation Safety Officer (RSO) contacted. You may also contact the RT contractor's RSO or emergency contact, whose contact information should be in the Radiation Safety Plan or HASP.

APPENDIX K.—GUIDANCE FOR RADIOACTIVE WASTE MANAGEMENT PROCEDURES

General Guidelines

- All radioactivity labels shall be defaced or removed from containers and packages prior to disposal in ordinary (nonradioactive) waste. If waste is compacted, all labels that are visible in the compacted mass shall be defaced or removed.
- Remind workers that nonradioactive waste such as leftover reagents, boxes, and packaging material shall not be mixed with radioactive waste.
- Occasionally monitor procedures to ensure that radioactive waste is not created unnecessarily. Review new procedures to ensure that waste is handled in a manner consistent with established procedures.
- In all cases, consider the entire impact of various available disposal routes. Consider occupational and public exposure to radiation, other hazards associated with the material and routes of disposal (e.g., toxicity, carcinogenicity, pathogenicity, and flammability), and costs.
- Waste management program shall include waste handling procedures for the users within their laboratories or assigned areas, and for waste handlers who may collect waste from areas of use to bring to the storage area for eventual disposal.
- Housekeeping staff shall be provided adequate training to avoid the possibility of unauthorized disposal or exposure of these individuals to radioactive material (RAM) or to radiation.

Notifications

- The Radiation Safety Officer (RSO) shall complete periodic notification forms for the Northeast Ohio Regional Sewer District that document the Center's release of RAM into the sanitary sewer system.

Model Procedure for Disposal by Decay-in-Storage (DIS)

- Only short-lived waste (physical half-life of less than or equal to 120 days) shall be disposed of by DIS.
- Short-lived waste shall be segregated from long-lived waste (half-life greater than 120 days) at the source.
- Waste shall be stored in suitable well-marked containers, and the containers should provide adequate shielding.
- Liquid and solid wastes shall be stored separately.
- When the container is full, it shall be sealed. The sealed container shall be identified with a label affixed or attached to it.
- The identification label shall include the date when the container was sealed, the longest-lived radioisotope in the container, date when 10 half-lives of the longest-lived radioisotope will have transpired, and the initials of the individual who sealed the container. The container may be transferred to the DIS area.
- The contents of the container shall be allowed to decay for at least 10 half-lives of the longest-lived radioisotope in the container.
- Prior to disposal as ordinary trash, each container shall be monitored as follows:
    - Check the radiation detection survey meter for proper operation.
    - Survey the contents of each container in a low background area.
    - Remove any shielding from around the container.
    - Monitor all surfaces of the container.
    - Discard the contents as ordinary trash only if the surveys of the contents indicate no residual radioactivity (i.e., surface readings are indistinguishable from background).
    - If the surveys indicate residual radioactivity, return the container to DIS area and contact the RSO for further instructions.
- If the surveys indicate no residual radioactivity, record the date when the container was sealed, the disposal date, type of waste (used or unused material, gloves, etc.), survey instrument used, and the initials of the individual performing surveys and disposing of the waste.

Procedure for Disposal of Liquids into Sanitary Sewerage

Note: *Currently there are no such activities at the NASA Glenn Research Center involving RAM-containing effluents directed to sanitary sewers. In addition, the Center's Nuclear Regulatory Commission (NRC) RAM license does not currently allow for possession of the type of RAM that would qualify for release into the sanitary sewer system per 10 CFR 20.2003. Additionally, prior to initiating such a practice, Center personnel shall coordinate this activity with the Northeast Ohio Regional Sewer District.*

APPENDIX L.—SELF-LUMINOUS EXIT SIGN PROCEDURES

Acquisition

Tritium-containing exit signs are acquired by the Center primarily by two basic mechanisms. First, such signs may have been specified for installation by a facility construction or renovation project and, as such, would be installed during that project. The construction contractor for this project shall turn over all information regarding the signs to their contact within the operations, project, or systems management function of the Center's Facility Division.

> ***Note:*** *When purchased, the distributor/seller of tritium-containing exit signs shall provide the following information to the "purchaser" (a.k.a. "general licensee") prior to transfer of the signs themselves:*
>
> *(1) a copy of the applicable portions of the general license found in 10 CFR 31.5;*
>
> *(2) copies of 10 CFR 31.2, 30.51, 20.2201, and 20.2202*
>
> *(3) a list of services that may only be performed by a specific licensee, which would be the manufacturer or servicer of the signs*
>
> *(4) information on acceptable disposal options for the device and the estimated cost for disposal*
>
> *(5) an indication that NRC's policy is to issue high civil enforcement penalties for improper disposal of devices*

The construction contractors, in turn, shall forward this information to the support service contractor (SSC) responsible for the maintenance and operation of institutional facilities. Following installation, this same SCC takes responsibility for the signs (and other life safety equipment) following a thorough review and inspection of the newly constructed or renovated area. The SSC shall document all available information for the signs (manufacturer, model, serial number, manufacture date, and effective useful life) as they barcode and add these units to their sign inventory. Gathering this data may require temporarily uninstalling and then reinstalling the signs depending upon how they are installed and the amount of information provided by the construction or renovation contractor.

Second, the signs may have been procured directly by the SSC responsible for maintenance and operation of institutional facilities to satisfy a NASA request or to meet NASA requirements. Again, the SSC shall capture the relevant information from the sign for updating the tritium exit sign inventory.

Inventory and Physical Inventorying

The support service contractor responsible for the maintenance and operation of institutional facilities shall maintain an electronic inventory of the tritium-containing exit signs. At a minimum, this list shall include the information specified below:

> ***Note:*** *For "new" additions to the inventory, all of the information below should be captured. For "legacy signs" (i.e., those in place before the adoption of this procedure), the SSC should include as much information as possible in the inventory record for the unit and, when opportunities arise, gather the remaining data for updating the entry.*

- Local barcode or identifiable number (if applicable)
- Manufacturer name, model, and unit serial number
- Manufacture date and effective lifespan
- Relevant location information

The SSC responsible for the maintenance and operation of institutional facilities shall, at least annually, physically inventory and inspect each sign, including those in storage cabinets. This physical inventory shall assure that the listed sign, as referenced by its serial number or local barcode number, is located in the listed location. The purpose of the inspection is to ensure that all letter segments are functional (i.e., adequately luminescent) so as to meet applicable life safety visibility criteria and confirm that the radioactive tritium gas containers are intact. The contracting office technical representative (COTR) for the SSC shall provide a copy of this inventory to the Radiation Safety Officer (RSO) at least annually and whenever so requested.

Handling, Installation, and Removal

While the signs are considered inherently safe enough to be handled or used by anyone with no radiation training or experience, there are certainly conditions associated with their rules as one can see by reviewing the requirements for general licensees. The two predominant themes in these requirements are (1) use the units only as built and as intended (e.g., do not modify, deface, or disassemble signs) and (2) possess the units responsibly (e.g., maintain accountability of and properly dispose of signs).

Signs shall be installed per manufacturers' guidance or using sound carpentry practices. When removing signs from the wall or from their ceiling mounts, one should take care not to drop the units and ensure that they are properly stored. While dropping one of these signs could damage the sign's case or facing, it is unlikely that the shock would damage the tritium containers, although it is possible. One would know that a tritium container had failed if a letter segment was no longer luminescent or if they visibly saw the broken capsule. A more likely scenario would be improper handling resulting in a sign being crushed by construction activities.

When taken out of service, tritium exit signs shall either be turned over to the RSO if they are to be returned to the vendor for disposal, or they are to be placed in secure storage awaiting reinstallation or reuse. In all cases, the inventory record shall be appropriately updated.

Response to Broken Tritium Sign with Release of H–3

If a sign was dropped, crushed, or otherwise damaged to the point such that an individual suspects there was a possible release of tritium (e.g., sign shows significant damage or not all sign segments appear to be functional), the person shall:

- Leave area and keep others from entering.
- Contact the emergency dispatcher (dial 911 from a base phone or 216–433–8888 on a cell phone) and ask to have the RSO or health physics representative contacted.
- If possible, attempt to increase ventilation to the affected area.
- Identify individuals who were possibly exposed to the released tritium. Those individuals should thoroughly wash their exposed areas of skin (hands, arms, and face) with soap and water.

  Note: *Exposure to airborne tritium from a broken exit sign does not pose a significant health risk to workers. A typical luminous exit sign contains less than 12 curies (Ci) of tritium in 12 segments of various lengths. If the tritium from the longest sign segment was released into a small, unventilated corridor (5 m long by 2 m wide by 3 m tall) and a person breathed that atmosphere for 1 hr, they would receive a TEDE of 7 mrem, which is slightly above the dose they received in that same period from natural background sources of radiation.*

The RSO or SHeD health physics representative shall:

- Verify whether or not the luminescent sign segments are intact.
- If no segments are broken, then the sign can be put into storage awaiting disposal or back into service (as appropriate).
- If all segments are not intact, then proceed with cleaning up and packaging the sign.
- The protective clothing required for cleanup usually consists of rubber/latex/nitrile gloves and, possibly booties. The broken sign and any miscellaneous pieces should be double bagged and sealed in plastic. If available, a small amount of silica gel desiccant should be added inside the inner bag.
- The RSO will brief the individuals involved in the incident to discuss any exposure concerns.
- The RSO will investigate the cause of the event and work with the entities involved to try and improve any causative activities or factors.
- The RSO will coordinate with the manufacturer and the Center's RAM shipper the shipment of the broken sign back to the manufacturer.
- The RSO will make any necessary reports to the Nuclear Regulatory Commission.

Contents

Chapter 9—Radiation Protection for Radiation-Generating Equipment 3
1.0 PURPOSE 3
2.0 APPLICABILITY 3
3.0 BACKGROUND 3
4.0 POLICY 3
5.0 RESPONSIBILITIES 3
5.1 Radiation Safety Officer 3
5.2 Safety Committee Chairperson 3
5.3 Radiation-Generating Equipment User/Operator 3
5.4 Radiation-Generating Equipment User/Operator's Supervisor 4
5.5 Medical Director, Occupational Medicine Services 4
5.6 Human Capital Development Division Chief 4
5.7 Safety, Health, and Environmental Division Chief 4
5.8 Support Service Contractor Supervision 4
6.0 REQUIREMENTS 4
6.1 Training and Qualifications (*NASA NPR1800.1, ODH OAC3701:1-66, OSHA 29CFR1910.1096*) 4
6.1.1 Analytical Radiation-Generating Equipment.—Vacuum Chamber 4
6.1.2 Analytical Radiation-Generating Equipment.—Cabinet and Open Systems 4
6.1.3 Industrial Radiation-Generating Equipment.—Irradiation Device in a Vacuum Chamber 5
6.1.4 Industrial Radiation-Generating Equipment.—Industrial Radiography at a Permanent Installation 5
6.1.5 Industrial Radiation-Generating Equipment.—Industrial Radiography at a Temporary Job Site (i.e., in the field) 5
6.1.6 Diagnostic Radiation-Generating Equipment.—Medical X-Ray Machine 5
6.1.7 Other Radiation-Generating Equipment 5
6.2 Medical Surveillance *(NASA NPR1800.1)* 6
6.3 Dosimetry (see Appendix C for additional guidelines) *(OSHA 29CFR1910.1096, ODH OAC3701:1-66, NASA NPR1800.1)* 6
6.3.1 Analytical Radiation-Generating Equipment.—Vacuum Chamber 6
6.3.2 Analytical Radiation-Generating Equipment.—Cabinet and Open Systems 6
6.3.3 Industrial Radiation-Generating Equipment.—Irradiation Device in a Vacuum Chamber 6
6.3.4 Industrial Radiation-Generating Equipment.—Industrial Radiography at a Permanent Installation 6
6.3.5 Industrial Radiation-Generating Equipment.—Industrial Radiography at a Temporary Job Site (i.e., in the field) 7
6.3.6 Diagnostic Radiation-Generating Equipment.—Medical X-Ray Machine 7
6.3.7 Other Radiation-Generating Equipment 7
6.3.8 Glenn Individual Dose Limits 7
6.3.9 Dose Investigation 7
6.3.10 Dose Reports 8
6.4 Radiation Surveys of Equipment and Facilities *(NASA NPR1800.1, ODH OAC3701:1-66, FDA 21CFR1020, OSHA 29CFR1910.1096)* 8
6.4.1 Survey Schedule 8
6.4.2 Survey Alternative 9
6.5 Inventory of Radiation-Generating Equipment *(NASA NPR 1800.1)* 9
6.6 Review of Radiation Protection Program for Radiation-Generating Equipment *(NASA NPR 1800.1)* 9
6.7 Quality Assurance Inspection of Medical X-Ray Facility *(NASA NPR 1800.1)* 9
6.8 Industrial Radiography Using Radiation-Generating Equipment at a Temporary Job Site (i.e., Field Radiography) *(ODH OAC3701:1-66, GRC GLM-QSA-1700.1)* 9

6.8.1 Portable X-Ray Units 9
6.8.2 Calibration and Maintenance of Portable Radiographic Units 10
6.9 Safety Permits (*GRC GLM-QSA-1700.1*) 10
6.10 Area Postings/Controls and Equipment Labels (*FDA 21CFR1020, OSHA 29CFR1910.1096, ODH OAC3701:1-66, NASA NPR1800.1*) 10
7.0 RECORDS (maintained by the RSO or HP unless otherwise noted) 11
8.0 REFERENCES 11
APPENDIX A.—DEFINITIONS AND ACRONYMS 12
APPENDIX B.—RADIATION SAFETY OFFICER RESPONSIBILITIES 14
APPENDIX C.—GUIDELINES FOR PERSONAL DOSIMETRY 15
APPENDIX D.—GUIDANCE FOR CONSTRUCTION CONTRACTOR PERFORMANCE OF FIELD X-RAY RADIOGRAPHY 17

Chapter 9—Radiation Protection for Radiation-Generating Equipment

NOTE: The current version of this chapter is maintained and approved by the Safety, Health, and Environmental Division (SHED). The last revision date of this chapter was January 2012. The current version is located on Glenn intranet at http://smad-ext.grc.nasa.gov/shed/pub/ohpm/ohpm-manual.pdf. Approved by: Chief of Safety, Health, and Environmental Division.

1.0 PURPOSE

This chapter describes the policies, procedures, and radiation protection requirements for the procurement and use of radiation-generating equipment (RGE), which includes, but is not limited to, x-ray-producing equipment. RGE produces ionizing radiation without the use of radioactive material (i.e., nuclear sources).

2.0 APPLICABILITY

The provisions of this chapter are applicable to civil servants, support service contractors (SSCs), and construction contractors at the NASA Glenn Research Center's (GRC) Lewis Field and Plum Brook Station.

3.0 BACKGROUND

Radioactive materials (RAM) and RGE are used safely throughout the industrial, medical, and research communities. When not properly controlled, however, ionizing radiation can present a hazard to individual users and/or others in the immediate environment. Historical and scientific data tell us that very high doses of ionizing radiation received over a short period (acute exposure) and high exposures received over a long period (chronic exposure) present various health hazards to people. The Glenn Radiation Protection Programs establish the policies, procedures, and responsibilities necessary for the safe operation and handling of radioactive materials and RGE.

4.0 POLICY

Glenn Radiation Protection Programs for Radioactive Materials and for Radiation-Generating Equipment are designed to maintain and preserve the health of our employees by eliminating unnecessary exposures and minimizing necessary exposures to ionizing radiation. Exposure to ionizing radiation is to be kept as low as reasonably achievable (ALARA).

All uses of RAM or RGE are approved by the Radiation Safety Officer (RSO) via either the materials application process, the health and safety plan process, or the safety permit process. Representatives of the Safety, Health, and Environmental Division (SHED) periodically assess the ionizing radiation hazards of the activities. The RSO is also responsible for ensuring that an annual audit of the effectiveness of the Radiation Safety Program is conducted. In addition to protecting our workers, the requirements and conditions of Glenn's Radiation Protection Program for Radiation-Generating Equipment comply with applicable regulations of the Occupational Safety and Health Administration (OSHA).

5.0 RESPONSIBILITIES

5.1 Radiation Safety Officer

Ensure activities involving RGE are conducted in accordance with NASA and OSHA requirements. See Appendix B for detailed responsibilities.

5.2 Safety Committee Chairperson

Lead safety permit evaluations and provide guidance to the safety permit requester on how to satisfy permit conditions. In cases involving RGE, the Safety Committee Chairperson will include the RSO as an ad hoc member of their evaluation committee.

5.3 Radiation-Generating Equipment User/Operator

Satisfy training and other requirements of this chapter in addition to working in a safe manner in accordance with established procedures for their particular RGE.

5.4 Radiation-Generating Equipment User/Operator's Supervisor

Ensure RGE operators follow established procedures and meet the requirements specified in this chapter and any applicable safety permits. Also, for Support Service Contractors (SSC), supervisors may be required to maintain medical surveillance and training records.

5.5 Medical Director, Occupational Medicine Services

Provide medical surveillance and post-exposure evaluation, as well as follow-up actions, in accordance with NASA Procedural Requirements (NPR) 1800.1. Records from such examinations and evaluations are to be retained for at least 30 years. Results of examinations are to be discussed with employees as needed. For SSC, such records may alternately be maintained by the employer. Also, the Medical Director is responsible for completing the biennial quality assurance inspection of the diagnostic x-ray facility and correcting deficient items from the inspection.

5.6 Human Capital Development Division Chief

Maintain records for employee completion of radiation safety courses and any associated examinations. For SSC, such records may alternately be maintained by the SSC supervision.

5.7 Safety, Health, and Environmental Division Chief

Support the RSO and safety committee chairpersons in the performance of their duties.

5.8 Support Service Contractor Supervision

If applicable, maintain records for employee completion of radiation safety courses and any associated examinations as well as records of any medical evaluations or examinations triggered because of potential exposure to ionizing radiation.

6.0 REQUIREMENTS

6.1 Training and Qualifications (*NASA NPR1800.1, ODH OAC3701:1-66, OSHA 29CFR1910.1096*)

Note: *The RSO may, in certain situations, specify additional radiation safety training requirements to those indicated below or simply require radiation safety training when none has been identified below. Such situations would typically be identified during the safety permit review process and would be handled on a case-by-case basis.*

Note: *The general radiation safety training called out by this section will include both initial and triennial refresher training.*

6.1.1 Analytical Radiation-Generating Equipment.—Vacuum Chamber

NASA civil servants and SSCs using analytical RGE where the electron tube is housed within a vacuum chamber are, as a rule, not required to receive radiation safety training. Devices falling under this grouping include electron microscopes, x-ray photoelectron spectroscopes (XPS), and Auger microprobes. Other training, on-the-job instruction or qualifications may be required for operators of said equipment to satisfy any local operating criteria along with conditions in applicable safety permits.

6.1.2 Analytical Radiation-Generating Equipment.—Cabinet and Open Systems

NASA civil servants and SSCs using analytical RGE where the x-ray emission is contained within a cabinet or where the x-ray emission is not contained shall receive radiation safety training designated by the RSO. Cabinet-type systems include laboratory x-ray diffraction (XRD) and x-ray fluorescence (XRF) instruments. Systems where access to beam is open include portable XRF instruments and, possibly, certain laboratory XRD units. Other training, on-the-job instruction or qualifications may also be required for operators of said equipment to satisfy any local operating criteria along with conditions in applicable safety permits.

6.1.2 - Employee completion of radiation safety training is documented in SATERN, which is accessible by the reporting function of an administrative SATERN session.

6.1.3 Industrial Radiation-Generating Equipment.—Irradiation Device in a Vacuum Chamber

NASA civil servants and SSCs using an irradiation device where the electron tube is housed within a vacuum chamber are, as a rule, not required to receive radiation safety training. As discussed here, these vacuum chambers primarily are comprised of metal, although other vacuum units may be appropriate, depending upon the electron tube potential. Typically, the chamber affords tens to hundreds of half-value layers (HVL) of shielding for the radiation source under consideration. Devices falling under this grouping include electron guns (e-guns), electron evaporation and deposition systems, and electron beam welders. Other training, on-the-job instruction or qualifications may also be required for operators of said equipment to satisfy any local operating criteria along with conditions in applicable safety permits.

6.1.4 Industrial Radiation-Generating Equipment.—Industrial Radiography at a Permanent Installation

NASA civil servants and SSCs performing radiography operations in a permanent radiographic installation shall receive radiation safety training designated by the RSO. This category of RGE includes x-ray cells or rooms and cabinets, and computed tomography (CT) systems. Other training, on-the-job instruction or qualifications may also be required for operators of said equipment to satisfy any local operating criteria along with conditions in applicable safety permits.

6.1.4 - Employee completion of radiation safety training is documented in SATERN, which is accessible by the reporting function of an administrative SATERN session.

6.1.5 Industrial Radiation-Generating Equipment.—Industrial Radiography at a Temporary Job Site (i.e., in the field)

Currently, no NASA civil servants or SSC are involved in performing radiographic testing (RT) at temporary job sites (i.e., in the field). When needed, the radiation safety training requirements for the industrial radiographer and their assistance will be developed by the Center's RSO.

Construction contractors conducting x-ray-type radiography activities at temporary job sites (i.e., in the field) and their assistants must satisfy training and work experience requirements specified by the Ohio Department of Health in Chapter 3701:1-66 of the Ohio Administrative Code. Records of such training and certification must be available to Glenn's RSO upon request.

6.15 - Employee completion of radiation safety training is documented in SATERN, which is accessible by the reporting function of an administrative SATERN session.

HASP documentation for training and certification are maintained by the RSO of the SHED.

6.1.6 Diagnostic Radiation-Generating Equipment.—Medical X-Ray Machine

Operators of the medical x-ray machine shall be a graduate of an American Medical Association accredited school of radiologic technology. They must be registered with the American Registry of Radiologic Technologists (ARRT) and remain in good standing with this organization by satisfying continuing education requirements of the organization. This required training includes 24 continuing education units (CEUs) every 2 years, with 6 of the CEUs in the topical area of radiation safety. Radiologic Technologists must also be licensed by the state in which they practice. Additionally, the technicians operating the diagnostic medical x-ray machine shall receive radiation safety training designated by the RSO.

6.1.6 - Employee completion of radiation safety training is documented in SATERN, which is accessible by the reporting function of an administrative SATERN session.

Records of professional certification are maintained by the employer of the radiologic technologists.

6.1.7 Other Radiation-Generating Equipment

Operators of the mailroom x-ray machines shall receive radiation safety training specified by the RSO. These individuals shall also be trained to operate the RGE involved per the manufacturer's training specifications. Local criteria for operator qualification may also be applicable.

6.1.7 - Employee completion of radiation safety training is documented in SATERN, which is accessible by the reporting function of an administrative SATERN session.

6.2 Medical Surveillance *(NASA NPR1800.1)*

Radiation medical examinations are conducted in accordance with the requirements set forth in NASA Procedural Requirements (NPR) 1800.1, NASA Occupational Health Program Procedures. The examinations called out shall be situational, exposure-determined evaluations following potentially high, inadvertent, acute exposures. At a minimum, the exam shall include laboratory blood work along with a medical/occupational history (including exposure). Additional focused physical exam elements shall be based upon the suspected area of the exposure (e.g., a skin exam if high dose was anticipated to the hands).

6.2 – Any such medical records would be maintained by Occupational Medical Services.

6.3 Dosimetry (see Appendix C for additional guidelines) *(OSHA 29CFR1910.1096, ODH OAC3701:1-66, NASA NPR1800.1)*

The use of personal dosimetry to estimate external radiation exposure shall be required for certain activities involving RGE. For some operations, the energy of the x-rays produced is so low that the associated hazard is negligible or possibly, not even measurable. The RSO shall identify when and what type of dosimetry is required. At a minimum, the RSO shall assign personal dosimetry to individuals working with RGE who are likely to receive an annual dose in excess of ten percent of their annual allowable limit. In practice, workers are typically assigned to use dosimetry at much lower exposure levels as described below.

> ***Note:*** *Individual circumstances or unusual scenarios may require dosimetry uses that contradict the following guidelines.*
>
> ***Note:*** *Employees with any concerns about dose monitoring (or the lack thereof) should give the RSO an opportunity to address such unease.*

6.3.1 Analytical Radiation-Generating Equipment.—Vacuum Chamber

NASA civil servants and SSCs using analytical RGE where electron tube is housed within a vacuum chamber (e.g., electron microscope, XPS, or microprobes) are not assigned dosimetry.

6.3.2 Analytical Radiation-Generating Equipment.—Cabinet and Open Systems

NASA civil servants and SSCs using analytical RGE where the x-ray emission is contained within a cabinet or enclosure (e.g., lab XRD and XRF systems) are typically assigned to wear whole body radiation dosimetry. Certain XRD users may also be instructed to use ring or extremity dosimeters if their work involves placing a hand near the collimated beam. Operators of the portable XRF system which has an open beam are no longer assigned to wear dosimetry based upon historical dose results.

6.3.2 – The requirement to use dosimetry is specified by the RSO as a condition on the safety permit associated with the activity. Radiation dosimetry records are maintained by the RSO of the SHED.

6.3.3 Industrial Radiation-Generating Equipment.—Irradiation Device in a Vacuum Chamber

NASA civil servants and SSC using an irradiation device where electron tube is housed within a vacuum chamber (e.g., e-guns, electron evaporation and deposition systems, and electron beam welders) are not assigned radiation dosimetry.

6.3.4 Industrial Radiation-Generating Equipment.—Industrial Radiography at a Permanent Installation

NASA civil servants and SSCs performing radiography operations in a permanent radiographic installation (e.g., cell x-ray or CT system) are required to whole body dosimetry during such work activities.

6.3.4 – The requirement to use dosimetry is specified by the RSO as a condition on the safety permit associated with the activity. Radiation dosimetry records are maintained by the RSO of the SHED.

6.3.5 Industrial Radiation-Generating Equipment.—Industrial Radiography at a Temporary Job Site (i.e., in the field)

Currently, there are no such activities being conducted by NASA civil servant or SSC employees. Construction contractors performing industrial radiography in the field shall satisfy Ohio Department of Health criteria for dose monitoring. Specifically, the radiographer and their assistant(s) are required to wear their whole body dosimeters in addition to self-reading dosimeters during field radiography activities.

6.3.6 Diagnostic Radiation-Generating Equipment.—Medical X-Ray Machine

Operators of the medical x-ray machine shall wear whole body radiation dosimeters when performing such activities.

6.3.6 – The requirement to use dosimetry is specified by the RSO as a condition on the safety permit associated with the activity. Radiation dosimetry records are maintained by the RSO of the SHED.

6.3.7 Other Radiation-Generating Equipment

Operators of the mailroom x-ray machines are not required to wear radiation-monitoring devices.

6.3.8 Glenn Individual Dose Limits

Note: *Dose limits must actually take into consideration doses from sources of radiation that are both outside the body (external) AND inside the body (internal), which, are referred to as Deep Dose Equivalent (DDE) and Committed Effective Dose Equivalent (CEDE), respectively. This DDE is commonly referred to as the "whole body dose" for external radiation dosimetry. The individual dose limits for DDE and CEDE are both 5 rem, as is the overall occupational dose limit, which is referred to as the Total Effective Dose Equivalent (TEDE). As described, the TEDE=DDE+CEDE and none of the three can exceed 5 rem per year.*

6.3.8 – Dosimetry results are reviewed by the RSO on at least a quarterly basis to monitor cumulative doses of record for employees participating in the Center's radiation dosimetry program.

6.3.8.1 Occupational Annual Dose Limits

- Whole body/deep dose equivalent (DDE), total effective dose equivalent (TEDE), or committed effective dose equivalent (CEDE): 5 rem (0.05 Sv)
- Lens of eye (lens dose equivalent (LDE)): 15 rem (0.15 Sv)
- Extremities, skin (shallow dose equivalent (SDE)), specific organs: 50 rem (0.5 Sv)

6.3.8.2 Gestation Period Dose Limit to Unborn Fetus of "Declared Pregnant" Radiation Worker

- Whole body/deep dose equivalent (DDE), total effective dose equivalent (TEDE), or committed effective dose equivalent (CEDE): 0.5 rem (0.005 Sv)

6.3.8.3 Members of the Public Annual Dose Limit (due to licensed activity)

- Whole body/deep dose equivalent (DDE), total effective dose equivalent (TEDE), or committed effective dose equivalent (CEDE): 0.1 rem (0.001 Sv)

6.3.9 Dose Investigation

In practice, occupational doses at GRC have historically been well below the stated limits. Should a worker's dose for a recording period appear unexpectedly high or, at a minimum, reach ten percent of the prorated allowable dose for that recording period, the RSO shall initiate an investigation into the cause of the individual's dosimetry results.

6.3.9 – Documentation for the investigations associated with dose results are kept with the individuals' dose records and with the chronological dosimetry reports.

6.3.10 Dose Reports

When required by regulations, employees who participate in the dosimetry program shall receive an annual report summarizing their radiation exposure data. Also, at any time, participants can make such a request. In addition, former employees can request dose history results for their period of occupational dose monitoring while at Glenn.

6.3.10 – Copies of the reports are kept with the employees' individual dose records.

6.4 Radiation Surveys of Equipment and Facilities *(NASA NPR1800.1, ODH OAC3701:1-66, FDA 21CFR1020, OSHA 29CFR1910.1096)*

Radiation surveys of RGE and facilities are used to determine if the equipment is operating properly and if associated controls are adequate. If possible, survey conditions will be established that represent a plausible, "worst-case" exposure scenario (i.e., operation at higher-than-normal voltage and/or current, lengthening the exposure period, redirecting the beam path, etc.). Surveys will be conducted by SHED staff members using energy-appropriate radiation survey meters. Surveys will be documented using the general "GRC Radiological Survey Form" in conjunction with the more specific "Radiation-Generating Equipment Inspection and Survey Form."

The RSO may, in certain situations, determine that a radiation survey is not necessary based upon the exposure scenario (i.e., photon energy, shielding, etc.). For example, the energy of the x-rays being produced can be so low that it is not possible to measure them using typical radiation surveillance instrumentation. Additionally, the shielding effects afforded by the equipment enclosure along with the relatively small magnitude typical of these sources support the very low hazard potential of such devices. Consequently, as a general rule, no surveys are required to be performed on equipment whose electron tube acceleration voltage is 20 kilovolts (kV) or lower.

The ability to perform surveys on certain equipment may be impacted by the emission parameters of the x-ray tube. In particular, the x-ray "shots" taken by the diagnostic x-ray unit in Medical Services are not long enough to be accurately measured by typical radiation surveillance instrumentation. Keeping in mind the purpose of such a perimeter survey, which is the detection of equipment malfunction and shielding degradation and/or compromise and the subsequent potential increase in radiation exposure to the "uncontrolled" population, alternative methods may be utilized to assess the performance of such a system. Since patients are deliberately "exposed" to radiation from this unit, ongoing quality assurance (QA) activities, periodic maintenance and a biennial inspection are employed to assess the health of this system.

6.4 – Documentation of surveys and inspections is located in the "Radiological Survey Log" and corresponding "Radiological Survey Forms," which are kept in survey notebook/files, along with the "Radiation-Generating Equipment Survey and Inspection Forms," which are kept in the individual files for a particular RGE facility.

6.4.1 Survey Schedule

Surveys and inspections of RGE are typically performed upon installation, if the equipment is moved, and on a periodic basis per the schedule below:

6.4.1.1 Biennially

Analytical Radiation-Generating Equipment—Vacuum Chamber (e.g., electron microscope, XPS, microprobes)

Industrial Radiation-Generating Equipment—Irradiation Device in a Vacuum Chamber (e.g., e-guns, electron evaporation and deposition systems, and electron beam welders)

Diagnostic Radiation-Generating Equipment—Medical X-Ray Machine

6.4.1.2 Annually

Analytical Radiation-Generating Equipment—Cabinet and Open Systems (e.g., lab XRD and XRF systems)

Industrial Radiation-Generating Equipment—Industrial Radiography at a Permanent Installation (e.g., cell x-ray or CT system)

Other Radiation-Generating Equipment (e.g., mailroom x-ray machines)

6.4.1.3 Other

Industrial Radiation-Generating Equipment—Industrial Radiography at a Temporary Job Site (i.e., in the field)

Field industrial radiography activities are monitored real-time with survey instruments by the radiographer, his assistant(s) and possibly the health physics/SHED staff to verify boundary radiation levels during radiographic exposures. The radiographer (or their assistant) is also required to survey the x-ray tube once the controller has been turned off in order to verify, in fact, that the tube has been de-energized. No specific "survey" documentation is generated as the surveyor is to be positioned at a location where the radiation level averages less than 2 mrem/hr.

6.4.2 Survey Alternative

In lieu of performing surveys using direct-reading instrumentation, area dosimetry monitoring may also be used by the RSO to assess general radiation levels in areas around x-ray and RGE.

6.5 Inventory of Radiation-Generating Equipment *(NASA NPR 1800.1)*

The RSO shall maintain a comprehensive inventory of radiation-generating equipment considered to be able to produce hazardous levels of ionizing radiation. The inventory is to be verified annually.

6.5 – An electronic inventory is available on the SHED share drive.

6.6 Review of Radiation Protection Program for Radiation-Generating Equipment *(NASA NPR 1800.1)*

The RSO shall have a review performed of this program's content and implementation at least once every 12 months. Because of certain program overlap between the ionizing radiation protection programs for RGE and RAM, the annual reviews for these programs may be performed at one time.

6.6 – The completed reviews shall be on file with the RSO.

6.7 Quality Assurance Inspection of Medical X-Ray Facility *(NASA NPR 1800.1)*

A biennial inspection and performance evaluation shall be conducted for the diagnostic x-ray facility found within Medical Services. The review criteria will be provided by NASA headquarters in NPR 1800.1 or other official guidance. Typically, this inspection is to be performed by a qualified radiological physicist consultant using metrics established by the Ohio Department of Health (Division of Prevention, Bureau of Radiation Protection, Radiologic Technology Section). The Medical Director and the RSO shall maintain copies of these inspection results.

6.7 – Copies of the report for this survey and inspection activity are maintained by the RSO of the SHED and the Medical Director. The RSO's copy is kept in the individual file for that particular RGE facility.

6.8 Industrial Radiography Using Radiation-Generating Equipment at a Temporary Job Site (i.e., Field Radiography) *(ODH OAC3701:1-66, GRC GLM-QSA-1700.1)*

6.8 – The RSO of SHED maintains copies of the temporary jobsite RT plans that he/she has approved along with any information that has been provided with the plan request.

6.8.1 Portable X-Ray Units

Portable x-ray units are commonly used to perform imaging of equipment/structures/piping (i.e., radiographic testing, or RT) that cannot be moved to an x-ray facility following repairs/modifications or periodic evaluation. Typical target materials here at Glenn include aircraft fuselage, flight hardware or thinner facility piping systems. Because these field radiography activities are conducted in environments with limited controls, special procedures are needed to minimize potential hazards to the workers involved as well as the general work population. For activities performed by NASA civil servants or SSCs, these procedures would be contained in the safety permit for the activity. Since there are a great variety of potential field locations, these procedures can be thought to describe the safety philosophy and general guidelines for performing radiography shots in the field. Field radiography requirements are established on a case-by-case basis. Typical requirements can include performing the activity during off-hours or on the weekend, evacuating areas, barricading and monitoring the work area, and

communicating and coordinating such activities with interested parties. In all cases, the RSO must be notified of the specific time and place of the field radiographic activity.

When such activities are being performed by external RT contractors, their written health and safety plan (HASP) is to describe, in detail, how they will perform their work and manage/control the hazard. The construction safety process and use of the "Health and Safety Plan" is described in Chapter 17 of the Glenn Safety Manual. Contractor's HASPs are approved by SHED personnel. In cases where the work task involves industrial radiography, the facility RSO will also approve the portions of the HASP which focus on the radiological hazards of the task, or the RSO can approve a separate radiation safety plan.

> ***Note:*** *The RSO's "approval" covers the radiation safety elements of the task; other industrial safety and environmental concerns are to be covered within the HASP (e.g., scaffolding, working aloft, disposal of chemicals) as required by Chapter 17, "Construction Safety," of the Glenn Safety Manual. If the subcontractor is to follow the prime contractor's HASP, then that subcontractor needs to submit an acknowledgement letter (on company letterhead) to the prime contractor indicating that they, the subcontractor, will abide by the prime's HASP. The prime contractor, in turn, will forward this letter to their COTR. Alternatively, the subcontractor may submit their own HASP.*

Appendix D of this chapter summarizes requirements for construction contractor performance of field x-ray radiography and it would be the role of the entity needing the testing to inform the RT contractor of these requirements and contact the Center's RSO with any questions. The NASA entity responsible for having the RT contractor on site must also be at the Center during the testing and need to be familiar with the oversight guidelines found in Appendix E "Informational Briefing Sheet for Oversight of Radiographic Testing."

6.8.2 Calibration and Maintenance of Portable Radiographic Units

Portable x-ray units used for field industrial radiography operations will be calibrated annually in accordance with manufacturer's guidelines. Records of this calibration and other maintenance performed on these units will be maintained by the radiographer and will be made available to the RSO upon request.

6.9 Safety Permits (*GRC GLM-QSA-1700.1*)

The safety permit process, as described in Chapter 1A of the Glenn Safety Manual, is used as a vehicle for assessing and addressing potential health and safety hazards associated with activities at GRC. The RSO will assist area safety committees in determining requirements, controls, and conditions for a safety permit involving the use of RGE. Typical permit conditions would include training, posting/labeling, the use of radiation dosimetry, periodic radiation surveys, and written procedures.

6.9 – Safety permit documentation is maintained by the chairperson of the committee issuing the permit

6.10 Area Postings/Controls and Equipment Labels (*FDA 21CFR1020, OSHA 29CFR1910.1096, ODH OAC3701:1-66, NASA NPR1800.1*)

Restricted and radiation areas shall be marked clearly with signs as designated by the RSO. The signage shall also indicate any special requirements pertaining to the particular area. In addition, labels are required at the point of radiation emission and also on the equipment which controls the production of the x-ray beam. Signs and labels may be available from the RSO.

6.10 – Requirements for postings/labels would typically be specified and verified during the safety permit evaluation and review process.

Figure 6.1—Radiation area warning sign.

Figure 6.2—X-ray equipment warning sign.

Figure 6.3—X-ray equipment warning label.

7.0 RECORDS (MAINTAINED BY THE RSO OR HP UNLESS OTHERWISE NOTED)

Annual Maintenance & Calibration for Portable Radiographic X-Ray Units.—Maintained by the GRC organization operating said equipment.

Diagnostic X-Ray Facility Inspections & Quality Assurance Surveys.—Maintained by Occupational Medicine Services.

GRC Radiological Survey Form.

Radiation-Generating Equipment Inspection and Survey Form.

Calibration records of survey instrumentation.

Radiation Dosimetry Reports and Records.

Training Records.—Maintained by Human Capital Development Division or Support Service Contractor organization

Medical Exam Records.—Maintained by Occupational Medicine Services or Support Service Contractor organization

8.0 REFERENCES

Document number	Document Name
21 CFR 1020	U.S. Food and Drug Administration, "Performance Standards for Ionizing-Radiation Emitting Products," Sections 1020.30-1020.40
29 CFR 1910.1096	Occupational Safety and Health Administration, "Ionizing Radiation," Section 1910.1096 – Ionizing Radiation
GLM-QS-1700.1	NASA Glenn Safety Manual, Chapter 1A—Safety Permit System
GLM-QS-1700.1	NASA Glenn Safety Manual, Chapter 17—Construction Safety
NPR 1800.1	NASA Procedural Requirement, "NASA Occupational Health Program Procedures"
OAC 3701:1-66	Ohio Administrative Code, "Radiation Generating Equipment Requirements and Quality Assurance Standards"

APPENDIX A.—DEFINITIONS AND ACRONYMS

Absorbed Dose- The amount of ionizing radiation energy absorbed in matter, including human tissue. The units of absorbed dose are the rad and the gray (Gy).

Analytical Radiation-Generating Equipment (analytical RGE).—A group of systems or components which produce ionizing radiation as either a primary or a secondary result and is used to determine or alter the properties of materials being measured or analyzed. Analytical RGE includes, but is not limited to, gauging units, electron microscopes, x-ray diffraction, x-ray fluorescence, and spectrometer devices.

American Registry of Radiologic Technologists (AART)

As Low As Reasonably Achievable (ALARA).—Making a reasonable effort to maintain exposures to radiation as far below the dose limits as is practical (1) consistent with the purpose for which the activity is undertaken, (2) taking into account factors such as available technology and the economics of improvements with respect to their benefits, and (3) in relation to the performance of such activities for the public interest.

Committed Dose Equivalent (CDE).—Dose equivalent to an organ during a 50-year period following the intake of radioactive material. The units of CDE are the rem and the sievert (Sv).

Committed Effective Dose Equivalent (CEDE).—A tissue-weighted sum of committed dose equivalent values for organs caused by the intake of radioactive materials. The units of CEDE are the rem and the sievert (Sv).

Computed Tomography (CT).—An imaging procedure that uses multiply x-ray transmission measurements and a computer program to generate tomographic images of a material (or patient).

Continuing Education Unit (CEU)

Diagnostic Radiation-Generating Equipment.—X-ray machines designed for irradiation of any part of the human body or animal for the purpose of diagnosis or visualization.

Diffraction.—An analytical process which reflects/deflects an x-ray beam, which is incident on a target material.

Deep Dose Equivalent (DDE).—The external whole-body exposure dose equivalent at a tissue depth of 1 centimeter (1000 mg/cm^2). The units of deep dose equivalent are the rem and the sievert (Sv).

Dose Equivalent.—The dose quantity used for radiation-protection purposes that takes into account the different effects observed in tissue for different types of radiation giving the same *absorbed dose*. The units of dose equivalent are the rem and the sievert (Sv).

Dosimetry.—Equipment used for measuring and registering accumulated exposure to ionizing radiation. For the purposes of this chapter, these devices include personal monitoring devices such as thermo-luminescent detectors (TLD), optically-stimulated luminescent detectors (OSL), self-reading dosimeters (SRD), or film badges.

Extremity.—For dose purposes, this means hand, elbow, arm below the elbow, foot, knee, or leg below the knee

Fluorescence (Glowing).—An analytical process that uses x-ray beam absorption to cause target materials to emit visible light

Health and Safety Plan (HASP)

Half-Value Layer (HVL).—The thickness of a material that will reduce the amount of radiation passing through the material to on-half of its initial intensity. This half-value thickness will depend upon the material (density) and the energy of the subject x-rays or gamma rays (particles).

High Radiation Area.—An area, accessible to individuals, in which radiation levels could result in an individual receiving a dose equivalent in excess of 100 mrem in any 1 hr at 30 cm from the radiation source or from any surface that the radiation penetrates.

Industrial Radiation-Generating Equipment (industrial RGE).—This category of RGE means industrial radiography equipment and irradiator devices.

Industrial Radiography Equipment.—A device using ionizing radiation (from either a sealed nuclear source or an x-ray unit) to examine (via real-time imaging, photographic film or other imaging media) the macroscopic structures of material by nondestructive methods.

Ionizing Radiation.—Any radiation (particle or wave) capable of displacing electrons from atoms or molecules, thereby producing ions. Examples: alpha, beta, gamma, x-rays, neutrons, high-speed electrons, protons and other atomic particles.

Irradiation Equipment.—RGE used to alter the chemical, biological, or physical properties of materials or to sterilize materials. Irradiation equipment includes, but is not limited to, electron beam processors, electron beam welders, electron beam coaters, and cabinet irradiators.

Lens Dose Equivalent (LDE).—The external exposure of the lens of the eye and is taken as the dose equivalent at a tissue depth of 0.3 cm (300 mg/cm^2).

NASA Procedural Requirement (NPR)

Occupational Safety and Health Administration (OSHA)

Open Beam.—Analytical RGE configured in a manner so an individual could place any part of their body in the primary beam during operation.

Permanent Radiographic Installation.—A shielded installation or structure designed or intended for radiography an in which radiography is regularly performed.

Quality Assurance (QA)

Rad.—The unit used for *absorbed dose*. 1 Rad = 0.01 Gray (Gy).

Radiation Area.—An area, accessible to individuals, in which radiation levels could result in an individual receiving a dose equivalent in excess of 5 mrem in any 1 hr at 30 cm from the radiation source or from any surface that the radiation penetrates.

Radiation-Generating Equipment (RGE)

Radiation Safety Officer (RSO)

Radioactive Materials (RAM)

Radiographic Testing (RT).—Another phrase for industrial radiography.

Rem.—The unit used for *dose equivalent*. The *dose equivalent* in *rem* is equal to the *absorbed dose* in *rad* multiplied by the quality factor. Also, 1 Rem = 0.01 Sievert (Sv).

Restricted Area.—An area where access is limited for the purpose of protecting individuals against undue risks from exposure to radiation and radioactive materials.

Shallow-dose equivalent (SDE).—The external exposure of the skin of the whole body or the skin of an extremity, is taken as the dose equivalent at a tissue depth of 0.007 cm (7 mg/cm^2).

Safety, Health, and Environmental Division (SHED)

Support Service Contractor (SSC)

Temporary Job Site.—any location (i.e., in the field) where industrial radiography is performed other that "permanent radiographic installations" specifically designed for such activities.

Therapeutic Radiation-Generating Equipment.—X-ray or electron-producing machines designed and used for external beam radiation therapy.

Total Effective Dose Equivalent (TEDE).—the sum of the deep dose equivalent (for external exposures) and the committed effective dose equivalent (for internal exposures). The units of TEDE are the rem and the sievert (Sv).

X-ray diffraction (XRD)

X-ray fluorescence (XRF)

X-ray photoelectron spectroscope (XPS)

APPENDIX B.—RADIATION SAFETY OFFICER RESPONSIBILITIES

The Radiation Safety Officer (RSO) is appointed by the Director to implement the radiation protection programs at Glenn Research Center (GRC). The RSO's responsibilities include the following:

Administer and coordinate the radiation protection programs for all activities involving radioactive materials and ionizing radiation-generating equipment and to ensure that the programs conform to Nuclear Regulatory Commission (NRC) and Occupational Safety and Health Administration (OSHA) regulations as well as NASA policy.

Serve as the RSO for all NRC licenses issued to the GRC and determine compliance with license conditions.

Provide health physics services and consultation to personnel at GRC. Such services shall include the following:

a. Provide, distribute, and maintain personnel radiation monitoring equipment (i.e., dosimetry); assess exposures recorded by such personal monitoring equipment; maintain exposure records.

b. Coordinate the radioactive waste disposal program; provide, collect, store, and dispose of waste containers; monitor effluent; maintain filter systems; maintain waste disposal records.

c. Supervise the performance of sealed source leak test; maintain inventories.

Control all licensed radionuclides at GRC as follows:

d. Review and approve all requests for procurement of radioactive material.

e. Assure that sources are properly represented on the Center's materials license.

f. Maintain an inventory of radioactive materials at GRC; conduct physical inventories at least semi-annually to comply with license requirements.

g. Upon notification of receipt of radioactive material shipment, coordinate package survey(s) and open package in approved area; maintain material receipt records.

h. Authorize all transfers of radioactive materials between Center locations.

i. Approve containers and locations for storage of all radioactive materials.

j. Package or inspect packaging for all off-site transfers of radioactive material; survey packages; assure compliance with NRC, Department of Transportation, and International Air Transport Association (IATA) regulations; maintain shipment records.

Conduct or coordinate training programs in radiation safety.

Maintain records related to the radiation protection programs per Section 7.0.

Terminate any activity involving radioactive material or ionizing radiation that is found to be a threat to health or property.

APPENDIX C.—GUIDELINES FOR PERSONAL DOSIMETRY

Obtaining Dosimetry

Individuals needing radiation dosimetry are to contact the Radiation Safety Officer (RSO). After satisfying training requirements and providing needed personal information, the individual will be issued their dosimetry and instructed on its use. New occupational workers are also required to provide the RSO with a record of occupational dose from previous employment. Information such as a new worker's accumulated dose for the current calendar year and any past "special exposures" will allow the RSO to appropriately manage their dose received in their inception year and over their career at GRC.

Temporary Need for Dosimetry

Temporary monitoring devices can be issued to transient personnel who may be assigned short-term work in a radiation area. The RSO will evaluate the radiation area and assign monitoring devices as appropriate.

Specification of Dosimetry Type

The need for and type of radiation dosimetry assigned is based upon the characteristics of the ionizing radiation and the type of activity involved. Dosimeters are used to estimate an individual's radiation dose cause by external sources of radiation.

Use of Dosimetry

Whole Body

"Whole body" dosimeters are used to estimate the radiation dose delivered to the head, trunk and thigh area of a worker. This region of the body includes the major organs and blood forming areas that would be more susceptible to chronic radiation exposure effects. This dose is more accurately termed to be the deep dose equivalent (DDE). The "whole body" badge is to be worn in its holder on the front of an individual's body in between their head and waist.

Self-Reading

Self-reading dosimeters (SRD) are used to provide a "real time" estimate of an individual's dose to x-rays or gamma rays. SRDs are typically worn in addition to an individual's "whole body badge" when that individual could be involved in an activity involving higher dose rates. The self reading dosimeter is to be worn similarly to the "whole body" badge. SRDs are to be checked by the user periodically during the exposure event to keep tabs on a worker's accumulated exposure. The dose estimated from an SRD is used for guiding actions during an exposure scenario. The SRD dose does not become the individual's official dose of record.

Ring and Extremity Badges

Ring or wrist badges may be specified for activities where a worker's hands come in closer contact to the field of ionizing radiation than their body. Ring badges have higher detection thresholds than whole body badges, and, along those lines, exposure limits for extremities are an order of magnitude greater than whole body limits.

Notify the RSO Immediately

There are certain situations where dosimetry wearers would need to notify the RSO immediately. Users would need to provide a written account detailing the event: who else was involved, when did it occur, what were the radiation characteristics, how long, etc. Situations would include, but are not limited to:

Lost Dosimetry.—if you are unable to find your badge following its use for exposure monitoring.

Damaged Dosimetry.— if your badge's physical integrity was compromised

Irradiated While Not In Use.—if your badge was dropped in an area that subsequently received a high radiation dose

Forgot to Wear a Badge.—if you proceeded in performing dosimetry-required activities without being monitored

Involved in a Potential High Exposure.—if you suspect you might have received an acute high dose

In all but the last of these scenarios, the user would be assisting the RSO in finding a way to estimate the individual's true dose for the exposure scenario. Notification in a potential high dose incident is needed to manage the affected individuals' dose(s).

Additional Guidelines for Dosimetry Users

- Wear your dosimeter as specified for the work being performed
- Know where your dosimeter (s) is at all times
- Use only the dosimeter assigned to you
- Use your assigned dosimeter only at GRC's Lewis Field or Plum Brook Station, and only in the areas for which it was assigned
- Never intentionally irradiate your dosimeter to test the efficacy of the radiation safety process
- If you have a medical procedure requiring the use of a radioactive tracer, contact the RSO and do not wear your dosimeter until the tracer has dissipated
- Consult with the RSO regarding any concerns or questions on the use of dosimetry or the dosimetry program

Dosimetry reports are on file with the RSO. Program participants receive an annual record of their dose and are advised to keep such records for their personal use.

APPENDIX D.—GUIDANCE FOR CONSTRUCTION CONTRACTOR PERFORMANCE OF FIELD X-RAY RADIOGRAPHY

Note: *The Radiation Safety Officer's "approval" on a HASP or separate "radiation safety plan" covers the radiation safety elements of the task; other industrial safety and environmental concerns are to be covered within the HASP (e.g., scaffolding, working aloft, disposal of chemicals) as required by Chapter 17, "Construction Safety," of the Glenn Safety Manual. If the subcontractor is to follow the prime contractor's HASP, then that subcontractor shall submit an acknowledgement letter (on company letterhead) to the prime contractor indicating that they, the subcontractor, shall abide by the prime's HASP. The prime contractor, in turn, shall forward this letter to their COTR. Alternatively, the subcontractor may submit their own HASP.*

- The construction contractor shall follow guidelines specified in the Ohio Department of Health's 3701:1-66-12 "Industrial radiography and irradiation devices utilizing radiation-generating equipment" of the Ohio Administrative Code. Out-of-state contractors, shall follow comparable rules established for their state.
- A copy of the construction contractor's certificate of registration with the Ohio Department of Health shall be included with the health and safety plan (HASP) or otherwise provided to the Radiation Safety Officer (RSO). (Out-of-state contractors shall provide comparable documentation) The contractor shall also provide proof of certification of the radiographer, along with the date of the most recent refresher radiation safety training for the radiographer and their assistant.

  Note: *Consideration of the specific area where the radiography is to be performed shall be demonstrated within the proposed plan. Preferably, this familiarity is garnered by the RT company representative working with the hiring contractor, FD representative, RSO and, possibly, the building manager.*

- The HASP for the radiography activity shall demonstrate specific knowledge about the planned shots, how they will be conducted safely, and what coordination issues might exist (i.e., impact on GRC employees or other construction contractors working in the nearby vicinity.) Information shall include a description of the shots being taken: technique, target material and thickness, quantity, spatial orientation, and time. The contactor shall also provide a description of the x-ray tube and controller, including make, model and operating potential to be used for specified activity.
- The HASP shall include a diagram or map showing the location of the 2 mrem/hr isodose line, or, alternatively shall provide a written, detailed description of this demarcation. Any assumptions used in establishing this boundary shall be identified in the HASP or its attachments. Collapsing this boundary based upon actual exposure per hour is left to the digression of the RSO.
- Areas that need to be evacuated during the radiography shots along with how such areas are to be secured shall identified in the HASP. Coordination with other workers may involve working with the appropriate building manager or the construction manager. Industrial radiography is commonly performed on off-shifts or over the weekend.
- Any other necessary special controls to be implemented during radiography activities shall be described in the HASP.
- The HASP shall list emergency contract numbers for the contractor's RSO and the GRC RSO (dispatch).
- The NASA entity who will be on site during the radiographic testing shall be familiar with the "Informational Briefing Sheet for Oversight of Radiographic Testing" (Appendix E).

APPENDIX E.—INFORMATIONAL BRIEFING SHEET FOR OVERSIGHT OF RADIOGRAPHIC TESTING

Informational Briefing Sheet for Oversight of Radiographic Testing (rev. 3/10)

Radiographic Testing (RT), or Industrial Radiography, is a non-destructive test method typically used for the macroscopic examination of metal structures or welds. High-energy photons (either gamma-rays or x-rays) are used to examine a target zone with the resulting image being imparted onto either photographic film or a digital image capturing device. Regardless of the photon type (either gamma-rays or x-rays), the action is herein described as an "exposure event" or "exposure shot." In most instances, the industrial radiography will involve the use of gamma rays from a radioactive source such as Iridium-192 or Cobalt-60 (denoted here as "GAMMA"). Lower energy photons from x-ray tubes may be needed when performing industrial radiography on light metals and other less-dense materials. (denoted as "X-RAY")

The NASA organization (civil service or support-service contractor) responsible for bringing in the radiographer shall have a representative onsite for oversight of and coordination with the RT contractor. As the NASA entity coordinating this activity on behalf of the subcontractor, there are certain basic requirements that you shall to be aware of: (if neither GAMMA nor X-RAY are denoted, then the requirement applies to BOTH.)

- Security shall be notified in advance of the arrival of the RT contractor.
- The RT contractor shall have an approved Radiation Safety Plan or a Health and Safety Plan (HASP) that covers the scope of the proposed work. (e.g., addendum for the radiography)
- At least two (2) individuals from the RT contractor shall be present; one of these persons is the "radiographer" while the other is the "radiographer's assistant."
- In addition to following specific regulations concerning the radiation aspect of the job, the RT contactors shall obey all pertinent industrial safety (i.e., OSHA) requirements, such as those for personal protective equipment, ladder safety, scaffolding, working aloft, confined space, etc. These elements of work safety are to be addressed in the HASP.
- The "camera," which contains the radioactive source, shall be under the direct surveillance of the radiographer or their assistant once it has been removed from their truck (GAMMA). Similarly, the x-ray tube/controller, when unlocked, must be under the direct surveillance. (X-RAY)
- The RT contactors shall use a <u>whole body dosimeter</u> (e.g., TLD or film badge) AND a <u>direct-reading dosimeter</u> (GAMMA and X-RAY). For radioactive source-based radiography, each RT contractor must ALSO use an <u>alarming doserate meter</u> (GAMMA).
- The RT contractor shall establish the exclusion zone prior to the exposure events. This includes setting up barricades, posting warning signs and verifying that the area is clear of other people. ONLY the RT contactors are permitted within the exclusion zone during exposure shots.
- While performing exposure shots, BOTH of the RT contractors shall be present with one controlling the camera/x-ray tube and the other watching to ensure the exclusion area is not violated.
- After each exposure event, the RT contractor shall use a <u>radiation survey meter</u> to verify that the source is properly housed in the shielded "camera" (GAMMA) or that the x-ray tube is de-energized (X-RAY)
- The RT contractor's truck contains a film development laboratory. Fluids shall not be dumped onto GRC property.

If you observe the Industrial Radiographer contractor violate these requirements or if you have concerns about how they are performing their work, you are to confront them with your concerns. If you continue to have such concerns, contact security dispatch at 216.433.2088 and ask to have the Glenn Radiation Safety Officer (RSO) contacted. You may also contact the RT contractor's RSO or emergency contact, whose contact information should be in the Radiation Safety Plan or HASP.

Contents

1.0 PURPOSE 2
2.0 APPLICABILITY 2
3.0 BACKGROUND 2
4.0 POLICY 2
5.0 RESPONSIBILITIES 2
5.1 Health Physicist and Radiation Safety Officer 2
5.2 Safety Committee Chairperson 2
5.3 Safety Permit Requester 3
5.4 Equipment User (Operator) 3
5.5 Equipment User's (Operator's) Supervisor 3
5.6 Chief, Human Capital Development Division 3
5.7 Chief, Safety and Health Division 3
6.0 REQUIREMENTS 3
6.1 Training 3
6.2 Evaluation of Activities Involving Non-ionizing Radiation Sources 3
6.2.1 Radiofrequency (RF) Sources (*IEEE C95.7*) 3
6.2.2 Other Non-ionizing Sources (*ACGIH Threshold Limit Values*) 4
6.3 Exposure Condition (*ANSI C95.1, IEEE C95.7, and ACGIH Threshold Limit Values*) 4
6.3.1 Occupational Exposure Limits 4
6.3.2 Action Levels 4
6.3.3 Non-occupational Exposure Limit 4
6.4 Field Evaluations or Surveys (*ANSI C95.1, IEEE C95.7, and ACGIH Threshold Limit Values*) 4
6.5 Safety Permit Process (*GLM–QS–1700.1*) 5
6.6 Construction Contractor Use of Radiofrequency Emitters (*GLM–QS–1700.1*) 5
6.6.1 Health and Safety Plan 5
6.6.2 Operating Considerations 5
7.0 RECORDS 5
8.0 REFERENCES 5
APPENDIX A .—DEFINITIONS AND ACRONYMS 7
APPENDIX B .—CATEGORIES OF NON-IONIZING RADIATION 9
APPENDIX C .—SUMMARY OF EXPOSURE LIMITS 11

List of Tables

TABLE I.—SUMMARY OF RFSP CATEGORIES BASED ON RF EXPOSURE CONDITIONS (*Reproduced from reference IEEE C95.7*) 4
TABLE B.1.—BANDS OF RADIOFREQUENCY AND SUBRADIOFREQUENCY FIELDS AND RADIATION ..... **Error! Bookmark not defined.**
TABLE B.2.—BANDS OF LIGHT RADIATION 10
TABLE C.1.—STATIC MAGNETIC FIELDS 12
TABLE C.2.—SUBRADIOFREQUENCY MAGNETIC FIELDS (f in Hz) 11
TABLE C.3.—STATIC AND SUBRADIOFREQUENCY ELECTRIC FIELDS (f in Hz) 11
TABLE C.4.—RADIOFREQUENCY AND MICROWAVE MAXIMUM PERMISSIBLE EXPOSURE (MPE) IN A CONTROLLED ENVIRONMENT 11

Chapter 10—Non-ionizing Radiation

Note: *The current version of this chapter is maintained and approved by the Safety and Health Division (SHeD). The last revision date of this chapter was March 2012. The current version is located on the Glenn Research Center intranet at* http://smad-ext.grc.nasa.gov/shed/pub/ohpm/ohpm-manual.pdf.
Approved by Chief of Safety and Health Division

1.0 PURPOSE

This chapter provides a summary of suitable criteria for human exposure to non-ionizing radiation, including bands of light radiation (except for lasers). The standards and guidelines for measurements and biophysical interaction apply to non-ionizing radiation sources except lasers. (Refer to Chapter **13**, Laser Safety Program, for laser safety controls and requirements.)

2.0 APPLICABILITY

The provisions of this chapter apply to civil servants, support service contractors (SSC), and construction contractors at NASA Glenn Research Center (GRC) Lewis Field and Plum Brook Station.

3.0 BACKGROUND

The Glenn Radiation Protection Program for Non-ionizing Radiation establishes the policies and procedures necessary for protection against exposure to high-intensity non-ionizing sources of radiation. Non-ionizing radiation sources are electromagnetic fields, radiofrequency (RF) fields and microwaves, visible and non-visible light, and lasers. (Laser use policies and procedures are specified in Chapter **13**, Laser Safety Program, of the Occupational Health Programs Manual.)

Definition of terms and acronyms are found in Appendix A. Typical bands of non-ionizing radiation and fields are categorized in Appendix B. The adverse health effects associated with, or, suspected for this broad category of energy emitters is quite varied. Some of the potential health hazards are summarized in the rightmost columns of the tables of Appendix B.

4.0 POLICY

GRC applies applicable use and exposure guidelines specified by the American Conference of Governmental Industrial Hygienists (ACGIH) (primary resource) and the Institute of Electrical and Electronics Engineers (IEEE) (secondary resource) to protect employees against a variety of known health effects associated with exposure to non-ionizing, high-power-density fields. GRC's policy is to ensure that non-ionizing radiation sources are identified, work areas are posted (if needed), users are properly trained to work with and around these sources, measurements are taken (if needed) to evaluate worker exposures, and controls to mitigate hazards are implemented, as needed, when surveys indicate that exposures can exceed acceptable limits.

5.0 RESPONSIBILITIES

5.1 Health Physicist and Radiation Safety Officer

The health physicist and radiation safety officer (RSO) shall ensure that activities involving non-ionizing radiation are conducted in accordance with appropriate industry standards, NASA policy, and Occupational Safety and Health Administration (OSHA) requirements. If the health physicist is not also GRC's RSO, then the health physicist shall work under the direction of the RSO.

5.2 Safety Committee Chairperson

The Area Safety Committee Chairperson (ASCC) leads safety permit evaluations and provides guidance to the safety permit requester on how to satisfy permit conditions. In cases involving non-ionizing radiation sources, the safety committee chairperson shall include the health physicist or the RSO as an ad hoc member of their evaluation committee. In addition the ASCC shall, in accordance with the Center's current safety permit process, maintain the documentation package (paperwork, procedures, drawings, etc.) that was used in evaluating the permitted activity.

5.3 Safety Permit Requester

The safety permit requester shall follow the Safety, Health, and Environmental Division (SHED) process for obtaining a safety permit and shall work with the safety committee and the health physicist or the RSO in satisfying conditions for the permit.

5.4 Equipment User (Operator)

The equipment user (operator) shall satisfy training and other requirements of this chapter in addition to working in a safe manner in accordance with established procedures for their particular non-ionizing radiation-generating equipment. Equipment users should express their concerns or questions regarding potential non-ionizing radiation safety issues to their management or to the RSO.

5.5 Equipment User's (Operator's) Supervisor

The equipment user's (operator's) supervisor shall ensure that operators of non-ionizing radiation-generating equipment follow established procedures and meet requirements specified in this chapter and any applicable safety permits. Also, for Support Service Contractors (SSC), supervisors may be required to maintain training records.

5.6 Chief, Human Capital Development Division

The Human Capital Development Division Chief shall maintain records for employee completion of non-ionizing radiation safety courses and any associated examinations.

5.7 Chief, Safety and Health Division

The SHED Chief shall provide support to the health physicist, RSO, and safety committee chairperson in the performance of their duties. In addition, the SHeD Chief shall satisfy applicable safety permit process requirements identified in accordance with the Center's current safety permit program.

6.0 REQUIREMENTS

Note: *Implementation of administrative and engineering controls along with other program elements is triggered by the potential for worker exposure to levels that exceed the "action level" for the subject type of non-ionizing radiation. The assessment of the exposure scenario is conducted by the health physicist or the RSO typically in support of a safety permit review or when otherwise contacted by GRC staff regarding the use of such systems.*

6.1 Training

The need for formal safety training or, less formal, informational safety guidance, shall be assessed during the safety permit review process using the standards of practice identified in the following section, which are based upon exposure potential. The RSO/health physicist will determine if safety training is required for a set of operators and what that training will entail.

6.1 - Employee completion of formal safety training associated with the use of a non-ionizing radiation source will be documented in SATERN, which is accessible by the reporting function of an administrative SATERN session.

6.2 Evaluation of Activities Involving Non-ionizing Radiation Sources

6.2 – Controls associated with using the NIR source are identified within the "Safety Committee Conditions for Conducting Activity" as found in the relevant safety permit.

6.2.1 Radiofrequency (RF) Sources (*IEEE C95.7*)

Implementation of RF safety program (RFSP) elements is based upon the potential risk associated with such sources. First, the RF sources shall be categorized according to its potential for producing RF exposure above action levels or exposure limits, and then appropriate controls shall be specified for each category. The term "controls" refers to both engineering and administrative controls for eliminating or reducing the potential exposure above the applicable RF exposure limits or action level. Table I, which summarizes these categories, is reproduced from the IEEE guidance document on RFSPs. That document, IEEE C95.7, is used as general guidance for parts of this chapter.

TABLE I.—SUMMARY OF RFSP CATEGORIES BASED ON RF EXPOSURE CONDITIONS
[Reproduced from reference IEEE C95.7]

RFSP category	Exposure condition	Control actions required
1	Operational characteristics of source(s) would not cause the action level to be exceeded.	None, unless maintenance or other conditions alter category
2	Operational characteristics of source(s) could cause the action level to be exceeded, but would not cause the exposure limit to be exceeded in accessible areas.	See Clause 4 and Table 3 *(of reference IEEE C95.7)*
3	Potential to exceed the exposure limit in accessible areas, if mitigating controls are not applied.	See Clause 4 and Table 3 *(of reference IEEE C95.7)*
4	Exposure will exceed exposure limit in accessible areas.	Restrict source output to achieve Category 3, 2, or 1 conditions, or prevent personnel access (see Clause 4 and Table 3 *of reference IEEE C95.7)*

6.2.2 Other Non-ionizing Sources (*ACGIH Threshold Limit Values*)

Other than RF emitters and lasers, non-ionizing radiation sources include, but are not limited to, high-intensity visible light sources, ultraviolet (UV) light emissions, and static or low-frequency electromagnetic fields. Activities involving these sources shall be evaluated to assess the potential for delivering worker exposures that could exceed action levels or exposure limits. Appropriate controls measures shall be implemented based upon the assessment and could, again, include both administrative controls (training, qualification, standard operating procedures, postings, labeling, etc.) and engineering controls (barricades, enclosures, shielding, interlocked entryways, etc.)

6.3 Exposure Condition (*ANSI C95.1, IEEE C95.7, and ACGIH Threshold Limit Values*)

6.3 – The exposure scenario is evaluated by the Health Physicist/RSO during the safety permit review process and is the basis for any controls and other specified conditions.

6.3.1 Occupational Exposure Limits

Worker exposure (i.e., occupational exposure) to non-ionizing radiation sources shall be controlled and limited so that applicable maximum permissible exposure (MPE) levels are not exceeded. Those subjected to such limits are referred to as being “people in a controlled environment.” A summary of these limits, which are identified as either MPEs or threshold limit values (TLVs) depending on the source reference, is provided in Appendix C as a quick reference. When evaluating an exposure scenario, the actual reference document shall be reviewed to ensure that the breadth and scope of the limit are being properly considered. The referenced exposure guidelines typically have multiple footnotes or amplifying criteria that should be taken into account.

6.3.2 Action Levels

Action levels are threshold exposure conditions which trigger the need for implementation of RFSP control elements for occupationally exposure workers (i.e., does not apply to general public or “uncontrolled exposure” population). For the purposes of RF exposures, action levels shall be established using the methodology in IEEE C95.7. For other non-ionizing radiation sources, the RSO shall establish this threshold as needed, which will typically be a fraction of the accepted exposure limit. A fraction value of one-half will be the default adjustment to the relevant exposure limit unless other guidance is available.

6.3.3 Non-occupational Exposure Limit

Non-operators of equipment, individuals unaware of sources of ionizing radiation, or those workers not trained on non-ionizing radiation hazards and safety are considered members of the general public or the “uncontrolled exposure” population. These people should not be exposed to non-ionizing radiation fields that exceed the action level guidelines, which can be thought of as the uncontrolled exposure MPE.

6.4 Field Evaluations or Surveys (*ANSI C95.1, IEEE C95.7, and ACGIH Threshold Limit Values*)

6.4 – Any field measurements performed around Non-ionizing Radiation sources will be documented using a “Radiological Survey Form,” which is maintained by the Health Physicist/RSO.

Non-ionizing radiation emitters are evaluated to ensure that exposures to workers and the general public do not exceed specified guidelines and recommendations. Because of the variety of parameters needing to be measured for surveys of non-ionizing radiation sources and the wide range of frequencies involved, it is impractical to own and maintain instruments to make every type of possible measurement. The health physics staff maintains, or has access to, certain

survey and monitoring instruments to "cover" the bulk of devices used at GRC. Other survey meters or equipment shall be procured or rented as needed. Surveys shall be documented using a GRC Radiological Survey Form. (This form is used by the health physics staff and can be found in the SHED Health Physics Procedures.) Equipment specifications and numerical calculations may also be used in lieu of direct field measurements.

6.5 Safety Permit Process (*GLM–QS–1700.1*)

6.5 – Safety permit documentation is maintained by the chairperson of the committee issuing the permit.

Research activities that involve the use of non-ionizing radiation sources shall be required to have a safety permit based upon the criteria outlined in Chapter **1A** of the Glenn Safety Manual (GSM). The safety permit process described in GSM Chapter **1A** is used to assess and address potential health and safety hazards associated with activities at GRC. GRC's health physicist or RSO will assist area safety committees in determining requirements, controls, and conditions for a safety permit involving the use of sources of non-ionizing radiation, except for lasers. The process shall involve a hazard assessment of the subject activity by the health physicist or the RSO. Typical permit conditions could include training, qualification requirements, posting of signs, labeling of equipment or systems, the use of engineering controls or shielding, field surveys, and written standard operating procedures.

6.6 Construction Contractor Use of Radiofrequency Emitters (*GLM–QS–1700.1*)

6.6 – The use of a Ground Penetrating Radar System or other Non-ionizing Radiation Source by a Construction Contractor is to be reviewed during the HASP evaluation process.

6.6.1 Health and Safety Plan

Ground-penetrating radar technology, which utilizes an RF signal emission, can be used to provide information concerning materials or structures that lie below the surface. A ground-penetrating radar system (GPRS) can be used for a variety of scanning purposes, including locating underground utilities, rebar, post-tension cables, electrical conduit, and other impediments embedded in concrete. Contractors who wish to utilize this technology onsite shall address the potential hazards of GPRSs, as they would any other activity, as they go through GRC's Health and Safety Plan (HASP) process described in Chapter **17** (Construction Safety) of the Glenn Safety Manual. As needed, the health physicist/RSO will be incorporated into the HASP evaluation process.

6.6.2 Operating Considerations

Workers shall be trained on how to use the equipment and be aware of the potential health effects of this type of radiation. Additionally, the equipment shall be used in such a way that non-operators would not be unknowingly exposed to non-ionizing radiation exceeding the applicable action level criteria. As an example, for a frequency of 1500 Megahertz (MHz) the maximum permissible exposure to a non-operator would be 1 milliwatt per square centimeter (mW/cm^2) or 10 W/m^2, for any 30-min period (see IEEE C95.1, Table 9—Action level (MPE for the general public when an RF safety program is unavailable)).

7.0 RECORDS

- GRC Radiological Survey Form.—Maintained by RSO or health physics staff.
- Standard operating procedures.—Maintained by the facility researcher, engineer, or safety permit requester.
- GRC safety permit package.—Maintained by the Safety Committee Chairperson.

8.0 REFERENCES

Document Number	Document Name
29 CFR 1926.54	Occupational Safety and Health Administration, "Construction Health and Safety Standards," Section 1926.54, Nonionizing Radiation
GLM–QS-1700.1	NASA Glenn Safety Manual, Chapter **1A**, Safety Permit System
GLM–QS–1700.1	NASA Glenn Safety Manual, Chapter **17**, Construction Safety
GLM–QS–1700.1	NASA Glenn Safety Manual, Chapter **21**, Mishap and Close Call Reporting, Investigating and Record Keeping

GLM–QS–1800.1	NASA Occupational Health Programs Manual, Chapter **13**, Laser Safety Program
NPR 1800.1	NASA Procedural Requirement NASA Occupational Health Program Procedures
	American Conference of Governmental Industrial Hygienists, TLVs and BEIs, 2009
	American Conference of Governmental Industrial Hygienists, Documentation of the Threshold Limit Values and Biological Exposure Indices, 2002
C95.1	American National Standards Institute, IEEE Standard for Safety Levels with Respect to Human Exposure to Radio Frequency Electromagnetic Fields, 3 kHz to 300 GHz: C95.1-1999
C95.7	Institute of Electrical and Electronics Engineers, IEEE Recommended Practice for Radio Frequency Safety Programs, 3 kHz to 300 GHz: C95.7–2005
29 CFR 1910.97	Occupational Safety and Health Administration, “Nonionizing Radiation,” Section 1910.97-Nonionizing Radiation

APPENDIX A.—DEFINITIONS AND ACRONYMS

Action level.—The values of the electric and magnetic field strength, the incident power density, contact and induced current, and contact voltages above which steps should be initiated to protect against exposures that exceed the upper tier, specifically, implementation of a radiofrequency safety program.

> ***Note:*** *For the purposes of this chapter, the action level for a particular exposure scenario will be established using the criteria specified in IEEE Recommended Practice for Radio Frequency Safety Programs, 3 kHz to 300 GHz: C95.7. Action level determination varies on the reference document; action levels can be a fraction of the allowable MPE for a controlled environment or simply the exposure limit for an uncontrolled environment.*

Adverse health effect.—A biological effect characterized by a harmful change in health.

American Conference of Governmental Industrial Hygienists (ACGIH)

Averaging time (*T*avg).—The appropriate time period over which exposure is averaged for purposes of determining compliance with a maximum permissible exposure or reference level.

American National Standards Institute (ANSI)

Attenuation.—The decrease in the radiant flux as it passes through an absorbing or scattering medium.

Biological effect.—A biological effect is an established effect caused by, or in response to, exposure to a biological, chemical, or physical agent, including electromagnetic energy. Biological effects are alterations of the structure, metabolism, or functions of a whole organism, its organs, tissues, and cells. Biological effects can occur without harming health and can be beneficial. Biological effects also can include sensation phenomena and adaptive responses.

Code of Federal Regulations (CFR)

Controlled environment.—Location where there is exposure that may be incurred by persons who are aware of the potential for exposure as a concomitant of employment, by other cognizant persons, or as the incidental result of transient passage through areas where exposure levels may be above the action level (or "uncontrolled environment" maximum permissible exposures (MPEs)) but less than "controlled environment" MPEs. An area where the occupancy and activity of those within is subject to control and accountability as established by a radiofrequency (RF) safety program for the purpose of protection from RF exposure hazards.

Electromagnetic radiation.—Natural or generated energy that moves through space.

Electromagnetic force (EMF).—Measurable field of energy that is produced by all devices and equipment that use or carry an electric current.

Extremely high frequency (EHF)

Far infrared (FIR)

Gauss (G).—Unit of magnetic field strength.

General public.—Individuals of all ages and varying health status, some of whom may be subject to requirements of the controlled environment.

> NOTE 1—Generally, unless specifically provided for as part of a radiofrequency safety program (RFSP), the general public includes, but is not limited to, children, pregnant women, individuals with impaired thermoregulatory systems, individuals equipped with electronic medical devices, and persons using medications that may result in poor thermoregulatory system performance.
>
> NOTE 2—Unless specifically provided as part of an RFSP, individual members of the public may not be aware of their exposure.

NASA Glenn Research Center (GRC)

Glenn Safety Manual (GSM)

Ground-penetrating radar system (GPRS)

Health and Safety Plan (HASP)

Institute of Electrical and Electronic Engineers (IEEE)

Infrared (IR).—Electromagnetic radiation with wavelengths that lie within the range of 0.7 to 1000 μm. This region is often broken into three spectral banks by wavelength: IR–A, or near–IR (0.7–0.78 to 1.4 μm), IR-B (1.4 to 3 μm), IR–C (3 to 1000 μm).

Ionization.—The process of adding one or more electrons to, or removing one or more electrons from, atoms or molecules, thereby creating ions.

Maximum permissible exposure (MPE).—The highest root mean square (rms) or peak electric or magnetic field strengths, their squares, or the plane-wave equivalent power densities associated with these fields, or the induced and contact currents to which a person may be exposed without incurring an established adverse health effect and with an acceptable margin of safety.

Microwave.—Electromagnetic radiation with frequencies in the range 300 MHz to 300 GHz.

National Aeronautics and Space Administration (NASA)

NASA Procedural Requirement (NPR)

Near field.—The area around an electromagnetic force source, such as an antenna, where the electric and magnetic fields do not exhibit a substantially wave-plane character, but vary considerably from point to point.

Near infrared (NIR)

Occupational Safety and Health Administration (OSHA)

Non-ionizing radiation.—Electromagnetic radiations that have long wavelengths and lack enough energy to produce ionizations

Power density.—Measurable quantity of an electromagnetic field.

Radiation safety officer (RSO)

Radiofrequency (RF) radiation.—Generally, electromagnetic energy with frequencies in the range 10 kHz to 300 GHz. Sometimes the term is used to refer more narrowly to the frequency range below 300 MHz.

Radiofrequency safety program (RFSP)

Root mean square (rms)

Safety and Health Division (SHeD)

Superhigh frequency (SHF)

Tesla (T).—Unit of magnetic field strength.

Threshold limit value (TLV).—Guidance on the level of exposure and conditions under which it is believed that nearly all healthy workers may be repeated exposed, day after day, without adverse health effects.

Ultraviolet (UV) radiation.—Electromagnetic radiation with wavelengths between soft x-rays and visible, violet light. The region is often broken down into three spectral bands by wavelength: UV–A (315 to 400 nm), UV–B (280 to 315 nm), and UV-C (200 to 280 nm).

Uncontrolled environment.—Locations where there is the exposure of individuals who have no knowledge or control of their exposure.

Visible radiation (light).—Electromagnetic radiation that can be detected by the human eye. It is commonly used to describe wavelengths that are in the range between 400 nm and 700 to 780 nm.

Waveguide.—A (usually) hollow metal duct used to contain and direct RF energy along a desired path.

APPENDIX B.—CATEGORIES OF NON-IONIZING RADIATION

TABLE B.1.—BANDS OF RADIOFREQUENCY AND SUBRADIOFREQUENCY FIELDS AND RADIATION

Frequency range			Wavelength range	Name	Potential adverse health effects from overexposure, (M) = magnetic field effect and (E) = electric field effect
>300 GHz			<1 mm	Infrared	
30 to 300 GHz	Radiofrequencies	Microwaves	10 to 1 mm	Extremely high frequency (EHF)	Biological effects are dependent upon both the quantity of energy absorbed and its distribution in the body. Possible cataract production in lens at excessive exposure levels. Possible effects (sterility production or genetic damage) due to testes exposure to excessive field strengths. Possible immunological effects due to excessive exposures. Some behavioral effects possible at high exposures in the microwave range.
>3 to 30 GHz			10 to 1 cm	Superhigh frequency (SHF)	
300 MHz to 3 GHz			1 m to 10 cm	Ultrahigh frequency (UHF)	
30 to 300 MHz			10 to 1 m	Very high frequency (VHF)	
3 to 30 MHz			100 to 10 m	High frequency (HF)	
300 kHz to 3 MHz			1 km to 100 m	Medium frequency (MF)	
30 to 300 kHz			10 to 1 km	Low frequency (LF)	
3 to 30 kHz	Subradiofrequencies		100 to 10 km	Very low frequency (VLF)	(M) When induced currents in body are high enough, various effects are observed at the cellular, tissue, and animal levels with unclear outcomes. Magnetic field limited to keep induced currents low. (M) Possible effects on embryo; unclear results. (M) Possible impact on miscarriages due to video display terminal use; unclear results (10 kHz). (E) Little evidence of specific health effects. Electric field limits are based on keeping induced current densities in the body close to that which occurs naturally. While biological effects due to electric fields may be observed, they are not readily associated with an adverse health effect. (M) Possible elevated risk to leukemia and brain cancer (50/60 Hz); no causal link established. (M) Interference with medical electronic devices (<6 Hz).
300 Hz to 3 kHz			1000 to 100 km	Voice frequency	
>0 to 300 Hz			>1000 km	Extremely low frequency (ELF)	
0 Hz				Static	(M) Interference with medical electronic devices. (M) Cardiovascular stress effects (change in blood pressure and heart rate) due to high exposure. (M) Possible impact on thermoregulatory function due to high exposure.

TABLE B.2.—BANDS OF LIGHT RADIATION

	Wavelength range	Name	Potential adverse health effects from overexposure
INFRARED	100 to 280 nm	UV–C	Damage (photochemical) to skin; erythema (reddening of skin) Damage to cornea and conjunctiva; photokeratitis (welder's flash) and conjunctivitis
	280 to 315 nm	UV–B	Damage (photochemical) to skin; erythema (reddening of skin), aging of skin, and skin cancer Damage to cornea and conjunctiva; photokeratitis (welder's flash) and conjunctivitis Damage to the lens; opacities and/or cataracts
	315 to 400 nm	UV–A	Damage (photochemical) to skin; erythema (reddening of skin), aging of skin, and skin cancer (lower hazard than UV-B or UV-C) Damage to cornea (lower hazard than UV-B or UV-C)
VISIBLE	400 to 700/780 nm		Damage (thermal and photochemical) to retina
ULTRAVIOLET	700/780 nm to 1.4 μm	Near infrared (NIR), IR–A	Damage (thermal) to retina
	1.4 to 3 μm	IR–B	Damage (thermal) to cornea and lens
	3 μm to 1 mm	Far infrared (FIR), IR–C	

APPENDIX C.—SUMMARY OF EXPOSURE LIMITS

TABLE C.1.—STATIC MAGNETIC FIELDS

Frequency, Hz	Category	Ceiling TLV
0	Whole body (general workplace)	2 T
	Whole body (special worker training and controlled workplace environment)	8 T
	Limbs	20 T
	Medical electronic device wearers	0.5 mT

TABLE C.2.—SUBRADIOFREQUENCY MAGNETIC FIELDS (f in Hz)

Frequency	Category	Ceiling TLV
1 to 300 Hz	Whole body	60/f mT
	Hands and feet	Whole body limit × 10
	Arms and legs	Whole body limit × 5
300 Hz to 30 kHz	Whole body and partial body	0.2 mT
50 Hz/60 Hz	Medical electronic device wearers	0.1 mT

TABLE C.3.—STATIC AND SUBRADIOFREQUENCY ELECTRIC FIELDS (f in Hz)

Frequency	Category	Ceiling TLV
0 to 100 Hz	Whole and partial body	25 kV/m
100 Hz to 4 kHz	Whole and partial body	2.5×10^6/f V/m
4 kHz to 30 kHz	Whole and partial body	625 kV/m
50 Hz/60 Hz	Medical electronic device wearers	1 kV/m

TABLE C.4.—RADIOFREQUENCY AND MICROWAVE MAXIMUM PERMISSIBLE EXPOSURE (MPE) IN A CONTROLLED ENVIRONMENT

Part A: Electromagnetic Fields (f in MHz)				
Frequency (f), MHz	Power density (S), mW/cm^2	Electric field (E), V/m	Magnetic field (H), A/m	Averaging time (E^2, H^2, or S), min
0.03 to 0.1		614	163	6
0.1 to 3.0		614	16.3/f	6
3 to 30		1842/f	16.3/f	6
30 to 100		61.4	16.3/f	6
100 to 300	1	61.4	0.163	6
300 to 3000	f/300			6
3000 to 15 000	10			6
15 000 to 300 000	10			616 000/f $^{1.2}$

Part B: Induced and Contact Currents (f in MHz)				
Frequency (f), MHz	Induced current through both feet, mA	Induced current through either foot, mA	Contact current, mA	Averaging time
0.03 to 0.1	2000 × f	1000 × f	1000 × f	1 s
0.1 to 100	200	100	100	6 min

MPEs for radiofrequency and microwave exposures in an uncontrolled environment can be found in ANSI/IEEE C95.1–2005.

For exposure limits to visible, near-infrared, and ultraviolet light, see the ACGIH documents listed as “References” in Section 8.

Contents

1.0 PURPOSE 2
2.0 APPLICABILITY 2
3.0 BACKGROUND 2
4.0 POLICY 2
5.0 RESPONSIBILITIES 2
5.1 SHeD Program Lead 2
5.2 Code QS, Occupational Medicine Clinic (Medical Services), Center Medical Director 3
5.3 FE/Energy and Environmental Management Office (EEMO), Waste Manager 3
5.4 Incident Reporting and Information System Site Administrator 3
5.5 Logistics and Technical Information Division, Facility Operations Specialist as the Contracting Officer's Technical Representative for Janitorial and Waste Management Services at Lewis Field. 3
Plum Brook Management Office, Contracting Officer's Technical Representative for TFOME Janitorial contract 3
5.6 Human Capital Development Division Chief 4
5.7 Safety and Health Division Chief 4
5.8 Supervisors 4
5.9 Employees 4
6.0 REQUIREMENTS 5
6.1 General (*OSHA 29 CFR 1910.1030* and *29 CFR 1910.1020*) 5
6.2 Exposure Determination (*OSHA 29 CFR 1910.1030(c)(2)*) 5
6.3 Exposure Control Plan (*OSHA 29 CFR 1910.1030(c)(1)*) 5
6.4.1 Training (*OSHA 29 CFR 1910.1030(g)(2)*) 5
6.4.2 Medical Consultations and the HBV Vaccination (*OSHA 29 CFR 1910.1030(f)* and *NPR 1800.1C, Chapter 2.1*) 6
6.3.1 6.4.3 Personal Protective Equipment (*OSHA 29 CFR 1910.1030(d)*) 6
6.5 Engineering and Work Practice Controls (*OSHA 29 CFR 1910.1020(d)*) 7
6.5.1 Universal Precautions (1910.1030(d)(1) 7
6.5.2 Laboratory Design (*NPR 8715.3C, paragraph 3.9.2.g*) ((CDC) 21-1112) 7
6.5.3 Housekeeping (*OSHA 29 CFR 1910.1030(d)(4)*) 7
6.5.4 Personal Hygiene (*OSHA 29 CFR 1910.1030(d)(2)*) 7
6.5.5 Biohazard-Contaminated Sharps (Medicinal Use) (*OSHA 29 CFR 1910.1030(d)(4)(iii)*) 7
6.5.6 Labeling of Biohazard-Contaminated Materials (*OSHA 29 CFR 1910.1030(g)*) 8
6.5.7 Biohazard-Contaminated Equipment (*OSHA 29 CFR 1910.1030(e)*) 8
6.5.8 Biohazard-Contaminated Laundry (*OSHA 29 CFR 1910.1030(d)*) 8
6.5.9 Biohazard Waste Disposal (*OSHA 29 CFR 1910.1030(d)*) 8
6.6 Bloodborne Pathogen or Other Potentially Infectious Material Exposure Incidents (*OSHA 29 CFR 1910.1030(f) and (29 CFR 1904.5*) 9
6.7 Bloodborne Pathogen Post-exposure Evaluation and Follow-up (*OSHA 29 CFR 1910.1030(f)*) 9
6.8 Annual Update of Exposure Control Plan *(OSHA 29CFR1910.1030(c)(1)(iv)* 9
7.0 RECORDS (*29 CFR 1910.1030(h)*) 10
8.0 REFERENCES 11
APPENDIX A .—DEFINITIONS AND ACRONYMS 12

List of Figures

Figure 1.—Biohazard label. 8

Chapter 11—Bloodborne Pathogens

NOTE: *The current version of this chapter is maintained and approved by the Safety, Health and Environmental Division (SHeD). The last revision date of this chapter was April 2012. The current version is located on the Glenn Research Center intranet at http://smad-ext.grc.nasa.gov/shed/pub/ohpm/ohpm-manual.pdf. Approved by the Chief of Safety and Health Division.*

1.0 PURPOSE

The purpose of the Bloodborne Pathogen Program is to prevent or minimize employee exposure to bloodborne pathogens from blood and other potentially infectious materials (OPIMs). This chapter identifies the employees at risk for occupational exposure to bloodborne pathogens and the elements of a bloodborne pathogen exposure control plan including engineering and work practice controls, personal protective clothing and equipment, medical surveillance, hepatitis B vaccination, signs, labels, and training.

2.0 APPLICABILITY

This chapter is applicable to all civil servant and support service contractor employees assigned to NASA Glenn Research Center (GRC) sites, construction contractors, students, and visitors. Support service contractors, construction contractors, and visitors' employers are responsible for the health and safety of their employees and for hazard analysis, training, personal protective equipment (PPE), medical surveillance, and other requirements to ensure compliance with NASA policy. This chapter applies to all employees who have occupational exposure to blood or OPIMs of human origin. Occupational exposure is defined as reasonably anticipated skin, eye, mucous membrane, or other parenteral contact with blood or OPIM that may result from the performance of the employee's duties. Note that bloodborne pathogen regulations do not apply to "Good Samaritan" acts performed on a voluntary basis in an emergency situation.

3.0 BACKGROUND

Bloodborne pathogens are microorganisms such as viruses or bacteria that are carried in blood and can cause disease in people. Two examples of bloodborne pathogens are hepatitis B virus (HBV), which causes hepatitis B, a serious liver disease, and human immunodeficiency virus (HIV), which causes acquired immunodeficiency syndrome (AIDS). The Occupational Safety and Health Administration's (OSHA's) Bloodborne Pathogen Standard, 29 Code of Federal Regulations (CFR) 1910.1030, is designed to protect workers in health care and related occupations from the risk of exposure to bloodborne pathogens. The written Bloodborne Pathogen Program is essentially an exposure control plan that outlines the protective measures to eliminate or minimize employee exposure to blood or OPIM.

4.0 POLICY

The Glenn Research Center's safety and occupational health programs are intended to maintain and protect the health and safety of our workers, as well as to promote employee wellness. This Chapter is based upon applicable laws and regulations, industry standards or other guidelines, as well as agency policy. The agency policy providing guidance for bloodborne pathogens is NASA Procedural Requirement (NPR) 1800.1C, Chapter 2.12 Bloodborne Pathogens. NPR 1800.1C also states that NASA Centers shall comply with OSHA standards promulgated under Section 6 of the OSHA Act of 1970. In addition to complying with the OSHA Bloodborne Pathogen Standard (29 CFR 1910.1030), the Centers for Disease Control (CDC), National Institute for Occupational Safety and Health provides current guidance on bloodborne pathogens and infectious disease concerns such as the current version of "Biosafety in Microbiological and Biomedical Laboratories".

5.0 RESPONSIBILITIES

5.1 SHeD Program Lead

The Safety and Health Division (SHeD) Program Lead shall

- Develop, implement, and annually review the written Bloodborne Pathogen Program
- Conduct exposure determinations to identify employees with reasonably anticipated skin, eye, mucous membrane, or other parenteral contact with blood or OPIM

- Provide initial and annual refresher bloodborne pathogen training for employees enrolled in the program
- Advise and assist supervisors with the development of bloodborne pathogen exposure control plans
- Review and approve all bloodborne pathogen exposure control plans for compliance with 29 CFR 1910.1030
- Conduct an annual review of the Bloodborne Pathogen Program Exposure Control Plans to ensure continued effectiveness and compliance

- Provide sharps containers for the disposal of needles for employee self-administration of medicine
- Provide technical oversight for bloodborne pathogen cleanups and clearance criteria
- Conduct a program review of contractor bloodborne pathogen programs, including the most recent exposure control plans, on a periodic basis

5.2 Code QS, Occupational Medicine Clinic (Medical Services), Center Medical Director

The Medical Director shall

- Provide medical consultation, HBV vaccine, and vaccination series to employees who anticipate occupational exposure to bloodborne pathogens
- Provide occupational exposure incident evaluation and treatment, and the necessary follow-up
- Provide and complete forms required by 29 CFR 1910.1030, including the HBV vaccination declination and issuance of the written medical opinion letter
- Assist the SHeD Program Lead with bloodborne pathogen training
- Provide for short-term storage of infectious or biohazard waste for Facilities Division Waste Management pickup
- Record sharps injury incidents that have been reported to Medical Services in the GRC Incident Reporting and Information System (IRIS) for the OSHA sharps injury log. Sharps injuries are subject to OSHA 300 recording and recordkeeping regulations

5.3 FE/Energy and Environmental Management Office (EEMO), Waste Manager

EEMO Waste Manager shall

- Provide and coordinate infectious, biohazard, and medical waste management support for GRC, ensuring that all potentially infectious materials are disposed of according to all Federal, State, and local Department of Transportation, OSHA, and Environmental Protection Agency (EPA) regulations
- Provide infectious, biohazard, and medical waste management procedures for bloodborne pathogen program waste (The written procedures are in Chapter **26** of the Environmental Programs Manual, Medical Waste Management.)

5.4 Incident Reporting and Information System Site Administrator

The IRIS-site administrator shall maintain a civil servant sharps injury log for the recording of percutaneous injuries from contaminated sharps. The information in the sharps injury log shall be recorded and maintained in such manner as to protect the confidentiality of the injured employee. Sharps injuries are initially recorded by Medical Services in IRIS, for the OSHA sharps injury log.

5.5 Logistics and Technical Information Division, Facility Operations Specialist as the Contracting Officer's Technical Representative for Janitorial and Waste Management Services at Lewis Field.

Plum Brook Management Office, Contracting Officer's Technical Representative for TFOME Janitorial contract

Contracting officer's technical representatives (COTRs) for Lewis Field and PBS janitorial contracts shall facilitate contractor services for spill containment and clean up of biologically contaminated areas.

5.6 Human Capital Development Division Chief

The Human Capital Development Division shall maintain records for employees who have completed bloodborne pathogen training and coordinate with the SHeD Program Lead to ensure that the System for Administration, Training, and Educational Resources for NASA (SATERN) bloodborne pathogen training curriculum is current and activated to issue annual training reminders for civil servant employees active in the Bloodborne Pathogen Program.

5.7 Safety and Health Division Chief

The SHeD Division Chief shall ensure a qualified individual is identified as the Bloodborne Pathogen Program Lead, to carry out the responsibilities set forth in the written Bloodborne Pathogen Program. The qualified individual shall be identified by the organization tasked with implementation of Bloodborne Pathogen Program.

5.8 Supervisors

Supervisors shall

- Identify any positions, procedures, or new or revised job tasks that include occupational exposure to blood or OPIM of human origin
- Ensure that employees who may be expected to provide first aid or cardiopulmonary resuscitation (CPR) in an occupational emergency situation, such as designated emergency responders, are identified as employees who may be exposed to blood or OPIM
- Ensure that employees with reasonably anticipated occupational exposure to blood or OPIM of human origin receive initial and annual refresher bloodborne pathogen training
- Ensure that employees with reasonably anticipated occupational exposure to blood or OPIM are referred to Medical Services for HBV consultation and vaccination if necessary (If the vaccine is declined, the employee must sign the HBV vaccination declination.)
- Ensure that bloodborne pathogen exposure control plans are developed and submitted to the SHED Program Lead for approval . Exposure control plans shall be reviewed, updated, and submitted for approval annually.
- Ensure that employees are knowledgeable about and have access to their job- or task-specific bloodborne pathogen exposure control plan(s)
- Ensure that employees have the proper bloodborne pathogen cleanup equipment, including PPE, spill containment, biohazard labels, and bloodborne pathogen waste receptacles
- Immediately refer all exposed employees to Medical Services for reporting and medical follow-up
- Coordinate with EEMO, Waste Manager to ensure proper disposal of infectious or biohazard waste
- Refer employees who need access to a sharps container to dispose of contaminated sharps used for onsite self-administration of medicine to the SHeD Program Lead.

5.9 Employees

Employees shall

- Review on an annual basis, or whenever there is a revision, the bloodborne pathogen exposure control plan specific to their job and tasks
- Conduct tasks and follow required bloodborne pathogen procedures, as noted in the job- or task-specific bloodborne pathogen exposure control plan, to prevent or minimize employee exposure and to ensure proper disposal of biohazard waste
- Wear the required PPE
- Comply with training and vaccination requirements
- Inform their immediate supervisor of an exposure incident and report immediately to Medical Services for exposure incident reporting and medical follow-up

Employees using hypodermic needles for self-administration of medicine shall properly dispose of personal-use syringes in a sharps container. Please refer to section6.5.5, Biohazard-Contaminated Sharps.

6.0 REQUIREMENTS

6.1 General (*OSHA 29 CFR 1910.1030* and *29 CFR 1910.1020*)

Good Samaritan acts, such as assisting a coworker with a nosebleed, are not considered to be occupational exposure and thus do not require the establishment of a bloodborne pathogen exposure control plan. Only employees with reasonably anticipated skin, eye, mucous membrane, or other parenteral contact with blood or OPIM of human origin, are included in this program.

"Universal precautions" is an approach to infection control in which all human blood and OPIM of human origin are treated as if known to be infectious for bloodborne pathogens. Employees shall adhere to universal precautions.

6.2 Exposure Determination (*OSHA 29 CFR 1910.1030(c)(2)*)

An exposure determination is required for each employees with potential occupational exposure to bloodborne pathogens or OPIM of human origin. These determinations require the listing of the job classifications and the tasks and procedures where occupational exposure occurs. The following civil servant jobs have been identified as having tasks with potential bloodborne pathogen exposure and are covered by this program: GRC Mishap Interim Response Team may come in contact with blood on a mishap scene; Aircraft Operations personnel who may provide preliminary cleanup of bodily fluids; employees supporting the Biomedical Devices Lab in building 110.

The following support service contractor jobs have been identified as having tasks with potential exposure to bloodborne pathogens and are covered by their employers' exposure determinations found in the employers written exposure control plan: Medical Services and Fitness Center personnel, Waste Management personnel whose tasks include transporting biohazard waste, security personnel, custodial personnel whose tasks include cleaning up blood or OPIM after an occupational or medical incident, custodial personnel whose tasks include Occupational Medicine Clinic (Medical Services) housekeeping, and Lewis Little Folks personnel who administer first aid for children enrolled in daycare.

6.3 Exposure Control Plan (*OSHA 29 CFR 1910.1030(c)(1)*)

An exposure control plan is required for each employee, or group of employees, with potential occupational exposure to bloodborne pathogens. The exposure control plan shall include the exposure determination, which identifies job classifications and, in some cases, tasks and procedures where employees are exposed to blood or OPIM; the procedures for evaluating the circumstances surrounding an exposure incident; methods of compliance; HPV vaccination and post exposure follow-up; communication of hazards to employees; and recordkeeping.

The Exposure Control Plan shall be reviewed and updated at least annually and whenever necessary to reflect new or modified tasks and procedures which affect occupational exposure and to reflect new or revised employee positions with occupational exposure.

6.1 to 6.3 – The SHeD verification procedure to ensure supervisor compliance with exposure determinations and written exposure control plans shall be a review of the applicable Exposure Determination and Exposure Control Plan (EDECP). The EDECP is maintained by supervisor, and a copy stored on SHeD server, IH Bloodborne folder

6.4 Bloodborne Pathogen Program Enrollment (*OSHA 29 CFR 1910.1030*)

Employees with reasonably anticipated skin, eye, mucous membrane, or other parenteral contact with blood or OPIM of human origin shall be enrolled in a bloodborne pathogen program.

6.4.1 Training (*OSHA 29 CFR 1910.1030(g)(2)*)

The SHeD Program Lead and the medical services provider shall provide initial and annual refresher bloodborne pathogen training to employees enrolled in the Bloodborne Pathogen Program. The training shall be provided within 10 days of an employee being assigned to job duties that have the potential for bloodborne pathogen exposure.

Training shall include the following elements:

- Bloodborne Pathogen Program requirements
- Epidemiology and symptoms of bloodborne diseases
- Modes of transmission of bloodborne pathogens and methods to control transmission
- Identification of and recognition of tasks that may involve exposure to potentially infectious materials
- Review of the job- or task-specific exposure control plan(s), including the use and limitations of safe work practices and engineering controls
- Information on the types, proper use, location, removal, handling, and disposal of PPE
- HBV vaccine requirements
- Actions to take and persons to contact in an emergency involving blood or OPIM
- Actions to take if an exposure incident occurs, including incident reporting and medical follow-up
- Information on the post exposure evaluation and follow up that the employer is required to provide
- Explanation of signs, labels, and color-coding requirements

6.4.2 Medical Consultations and the HBV Vaccination (*OSHA 29 CFR 1910.1030(f)* and *NPR 1800.1C, Chapter 2.1*)

All employees enrolled in the Bloodborne Pathogen Program shall receive a medical consultation and the HBV vaccination series, according to recommendations of the U.S. Public Health Service current at the time these evaluation and procedure. Medical Services shall provide the vaccination series, at no cost to the employee, after the employee has received initial bloodborne pathogen training and within 10 days of the initial assignment date, as required by OSHA .

If an employee with potential occupational exposure to bloodborne pathogens declines the HBV vaccination series, they shall be required to sign the HBV vaccination declination, which dismisses GRC and its employees from responsibility. Medical Services shall provide this waiver to the employee and maintain it in the employee's medical records.

6.3.1 6.4.3 Personal Protective Equipment (*OSHA 29 CFR 1910.1030(d)*)

Where the potential for exposure to bloodborne pathogens is a concern, employees shall wear PPE. Appropriate PPE prevents blood and OPIM from penetrating through employee work clothing to the skin, eyes, mouth, or mucous membranes.

Employees shall wear gloves when it is reasonably anticipated that they may have hand contact with blood or OPIMs and when handling or touching contaminated items or surfaces. Gloves shall be replaced as soon as practical when they become contaminated or as soon as possible when they have been torn, punctured, or can no longer act as a barrier between the body and potentially infectious material.

Employees shall wear masks—in combination with eye protection devices, such as goggles or glasses with side shields, or chin-length face shields—whenever splashes, spray, spatter, or droplets of blood or OPIMs may be generated and eye, nose, or mouth contamination can be reasonably anticipated.

CPR masks should be used whenever possible but are not required.

Employees shall wear appropriate protective clothing—such as gowns, aprons, lab coats, clinic jackets, or similar outer garments—when there is a potential for splashing, spraying, or lying in potentially infectious material. The type and characteristics of each garment will depend upon the task and degree of exposure anticipated.

Employees shall remove contaminated PPE as soon as possible and before leaving the work area. Employees shall remove torn, punctured, or worn PPE immediately and must wash the affected area thoroughly with soap and water. PPE shall be removed in a manner that does not create an additional exposure. After removal, contaminated garments shall be kept inside out so that the contaminated surface faces inside. Contaminated PPE shall be discarded in an approved biohazard container.

6.4 – The SHeD verification procedure to ensure compliance with bloodborne pathogen enrollment requirements shall be a review of the SATERN bloodborne pathogen training files, medical services employee health records, and the applicable EDECP. Training completion is documented in SATERN and accessible by the reporting function of an administrative SATERN session. Medical files are kept by Medical Services. The EDECP is maintained by supervisor, and a copy stored on SHeD server

6.5 Engineering and Work Practice Controls (*OSHA 29 CFR 1910.1020(d)*)

6.5.1 Universal Precautions (1910.1030(d)(1)

Universal precautions is an approach to infection control in which all human blood and OPIM of human origin are treated as if known to be infectious for bloodborne pathogens. Employees shall adhere to universal precautions.

6.5.2 Laboratory Design (*NPR 8715.3C, paragraph 3.9.2.g*) ((CDC) 21-1112)

Laboratory designs shall include additional considerations for biohazards resulting from the use or handling of biological materials such as infectious microorganisms, viruses, medical waste, or genetically engineered organisms.

6.5.3 Housekeeping (*OSHA 29 CFR 1910.1030(d)(4)*)

All equipment and work surfaces that have been contaminated with blood or OPIMs shall be cleaned and decontaminated with an appropriate disinfectant. GRC custodial contractors at Lewis Field and PBS custodial contractors shall contain spills and clean up biologically contaminated areas at their respective facilities. The COTR(s) for the custodial contract services shall provide contract oversight. The SHED Program Lead shall provide technical oversight for bloodborne pathogen cleanups and final clearance criteria.

6.5.4 Personal Hygiene (*OSHA 29 CFR 1910.1030(d)(2)*)

Hand washing is a critical work practice for exposure control. Immediately after working with potentially infectious substances, employees shall wash their hands and all other body parts that may have contacted potentially infectious material. If gloves have been worn, employees shall wash their hands immediately after removing the gloves. If hand-washing facilities are not available, antiseptic hand cleanser in conjunction with paper towels or antiseptic towelettes shall be used.

Eating, drinking, smoking, applying cosmetics or lip balm, and handling contact lenses shall be prohibited in workareas where there is a reasonable likelihood of occupational exposure. Employees shall not store food and drinks in refrigerators, freezers, shelves, or cabinets, or on countertops or benches where blood or OPIMs are present.

6.5.5 Biohazard-Contaminated Sharps (Medicinal Use) (*OSHA 29 CFR 1910.1030(d)(4)(iii)*)

Employees, such as diabetics, using hypodermic needles for the self-administration of medicine shall properly dispose of all biohazard sharps; the sharps must be stored such that there is no potential for another individual to come into contact with the needle.

For the disposal of medicinal use biohazard sharps employees may use either a puncture-proof container with a lid that is then taken home for disposal, or employees may obtain a sharps container from the SHED Program Lead. It should be noted that EEMO, Waste Manager only provides assistance for the disposal of biohazard waste generated on-site and stored in GRC-provided biohazard waste containers. The Centers for Disease Control and the Ohio Department of Health provide guidance for the disposal of domestic biohazard waste.

Employees choosing to use a GRC-provided sharps container for disposal shall obtain the sharps container from the SHED Program Lead. Full sharps containers originating at GRC shall be closed and secured prior to transport, and then transported to Medical Services for temporary storage and subsequent Waste Management pickup. Sharps containers for PBS employees are located next to or near the “main” first aid station at each of the PBS test sites.

Biohazard-contaminated needles and other biohazard-contaminated sharps (other than those used personally by a diabetic) shall not be bent, recapped, or removed unless no other alternative is feasible or a specific medical procedure requires the needle to be bent, recapped, or removed. If a contaminated needle does need to be bent, recapped, or removed, these operations must be done by a mechanical device designed specifically for the purpose.

6.5.6 Labeling of Biohazard-Contaminated Materials (*OSHA 29 CFR 1910.1030(g)*)

Warning labels must be placed on all containers that contain potentially infectious material. These labels shall contain the biohazard symbol and the word "BIOHAZARD." The labels shall be predominantly fluorescent orange or orange-red. See Figure 1. The labels must be affixed as close to the container as possible by string, wire, adhesive, or any other method that prevents the label from becoming easily removed. Red bags or red containers with the biohazard symbol and word printed on them can be substituted for the labels.

Figure 1.—Biohazard label.

6.5.7 Biohazard-Contaminated Equipment (*OSHA 29 CFR 1910.1030(e)*)

Equipment potentially contaminated with blood or OPIM shall be examined and, prior to servicing, shipping, storage, or use shall be decontaminated as necessary. The Facility Operations Specialist COTR oversees housekeeping contract services. Employees with biohazard-contaminated equipment shall contact the Facility Operations Specialist COTR for equipment decontamination assistance. THE SHeD Program Lead provides technical oversight for bloodborne pathogen cleanups and clearance criteria

If disinfection is not feasible or possible, equipment must have a readily observable label attached to it stating which portions remain contaminated. This information must be conveyed to all affected employees, the servicing representative, and/or the manufacturer, as appropriate prior to handling, servicing, or shipping so that appropriate precautions can be taken.

6.5.8 Biohazard-Contaminated Laundry (*OSHA 29 CFR 1910.1030(d)*)

Laundry shall be bagged or containerized at the location where it was used and shall not be sorted or rinsed in the location of use. The bags or containers used must be labeled or color-coded in accordance with this program. Employees who have contact with contaminated laundry must use protective gloves and other appropriate PPE.

6.5.9 Biohazard Waste Disposal (*OSHA 29 CFR 1910.1030(d)*)

Potentially infectious materials shall be disposed of in accordance with SHED procedures detailed in the Environmental Programs Manual, Chapter **26**, Medical Waste Management. EEMO Waste Manager provides support for biohazard waste concerns.

All potentially infectious waste, including clothing contaminated with blood or OPIM, shall be placed in red biohazard waste containers or bags. If the outside of the biohazard container becomes contaminated, the container shall be placed inside a secondary container that can prevent leakage during handling, processing, storage, transport, or shipping. The outside, secondary container shall be labeled or color-coded according to the requirements of this standard. The container for transport or shipping shall be labeled or color-coded according to this program and closed prior to being stored, transported, or shipped.

6.5 – The SHeD verification procedure to ensure compliance with engineering and work practice controls shall be a review of the EDECP and program evaluation files. The EDECP and the program evaluation files are maintained by supervisor, and a copy stored on SHeD server.

6.6 Bloodborne Pathogen or Other Potentially Infectious Material Exposure Incidents (*OSHA 29 CFR 1910.1030(f) and (29 CFR 1904.5*)

An exposure incident occurs when blood or OPIM comes in direct contact with an employee's eyes, mouth, or other mucous membranes, or non-intact skin, and when there is other parenteral contact. Non-intact skin includes skin with dermatitis, hangnails, cuts, abrasions, and chafing.

Any employee involved in an incident resulting in exposure to blood or OPIM shall immediately report the incident to Medical Services and their supervisor. Medical Services shall provide a post exposure evaluation, incident reporting, and follow-up documentation.

6.7 Bloodborne Pathogen Post-exposure Evaluation and Follow-up (*OSHA 29 CFR 1910.1030(f)*)

Civil servants shall be provided with a confidential medical evaluation and follow-up. The IRIS report shall document the route of exposure, circumstances under which the exposure occurred, and the source individual.

Contractor personnel shall have an initial evaluation at GRC's onsite Medical Services who will generate the necessary reports. The contractor shall be assisted in determining the process for further evaluation and treatment by an outside facility as required by their medical program.

The SHED Program Lead or the contractor health and safety representative, with medical provider assistance, shall facilitate access to the following documentation to be provided to the licensed healthcare professional evaluating an employee after an exposure incident:

- A copy of OSHA's Bloodborne Pathogen Regulation 29 CFR 1910.1030
- A description of the exposed employee's duties as they relate to the exposure incident
- Documentation of the route(s) of exposure and the circumstances under which exposure occurred
- Results of the source individual's blood testing, if available
- All medical records relevant to the appropriate treatment of the employee including vaccination status (The employer is responsible for maintaining these records.)

Medical Services shall obtain a copy of the evaluating physician's written opinion and provide it to the exposed individual within 15 days of the completion of the evaluation. The post exposure evaluation shall only include information regarding relevant medical conditions that require further evaluation or treatment.

6.6 & 6.7 – The SHeD verification procedure to ensure compliance with exposure incidents and post exposure evaluations and follow-up shall be a review of Medical Services medical records. The medical records are kept by Medical Services.

6.8 Annual Update of Exposure Control Plan *(OSHA 29CFR1910.1030(c)(1)(iv)*

The Bloodborne Pathogen Program Exposure Control Plans will be reevaluated every year to ensure they are effective and in compliance with all applicable regulations, as required by OSHA.Contractors are responsible for providing, upon request, the SHeD Program Lead with the most recent version of their bloodborne pathogen program and exposure control plans.

6.8 – The SHeD verification procedure to ensure compliance with program requirements shall be a review of the most recent EDECP. The most recent EDECP is kept by the supervisor.

7.0 RECORDS (*29 CFR 1910.1030(h)*)

Training records.—Maintained in SATERN by Human Capitol Development Division

Bloodborne pathogen written program - Maintained on SHeD server, IH Bloodborne Folder

Exposure determinations (hazard analysis).—Maintained by supervisors and documented in EDECP

Exposure control plans.—Maintained by supervisors and documented in EDECP

Exposure Determination and Exposure Control Plan (EDECP) – Maintained by supervisor, and a copy stored on SHeD server, IH Bloodborne folder.

Medical evaluations.—Maintained by Medical Services and kept for the duration of an employee's employment plus 30 years.

Biohazard waste manifests.— FE Division, Energy and Environmental Management Office

Civil Servant Sharps injury log on IRIS.—Maintained by IRIS-site administrator

.

8.0 REFERENCES

Document number	Document name
29 CFR 1910.1030	Occupational Safety and Health Administration (OSHA), Bloodborne Pathogen Standard.
NPR 1800.1	NASA Procedural Requirements, NASA Occupational Health Program Procedures.
29 CFR 1910.1020	OSHA Access to Employee Exposure and Medical Records.
29 CFR 1904.5	OSHA, Recording and Reporting Occupational Injuries and Illness.
CDC	Biosafety in Microbiological and Biomedical Laboratories, 5th Edition, Centers for Disease Control and Prevention, National Institutes of Health, HHS Publication No. (CDC) 21-1112, Revised December 2009.

APPENDIX A.—DEFINITIONS AND ACRONYMS

Acquired immunodeficiency syndrome (AIDS)

Blood.—Human blood, human blood components, and products made from human blood.

Bloodborne pathogens.—Pathogenic microorganisms that are present in human blood and can cause disease in humans. These pathogens include, but are not limited to, hepatitis B virus (HBV) and human immunodeficiency virus (HIV).

Cardiopulmonary resuscitation (CPR)

Code of Federal Regulations (CFR)

Contaminated.—Presence or the reasonably anticipated presence of blood or other potentially infectious materials on an item or surface.

Contracting officer's technical representative (COTR)

Decontamination.—Use of physical or chemical means to remove, inactivate, or destroy bloodborne pathogens on a surface or item to the point where they can no longer transmit infectious particles and the surface or item is rendered safe for handling, use, or disposal.

Engineering controls.—Controls that isolate or remove the bloodborne pathogen hazard from the workplace. Examples of engineering controls include sharps disposal containers and self-sheathing needles.

Environmental Protection Agency (EPA)

Exposure Determination and Exposure Control Plan (EDECP)

Exposure incident.—Specific eye, mouth, other mucous membrane, non-intact skin, or other parenteral contact with blood or other potentially infectious materials that results from the performance of an employee's duties.

Good Samaritan.—Individual who provides first aid, rescue breathing, or cardiopulmonary resuscitation (CPR) for a coworker but whose job does not require him or her to perform such acts.

Glenn Research Center (GRC)

Hand-washing facility.—Facility providing an adequate supply of running potable water, soap, and single-use towels or hot-air drying machines.

Hepatitis B virus (HBV)

Human immunodeficiency virus (HIV)

Incident Reporting and Information System (IRIS)

Industrial hygienist (IH).—Professional tasked with the anticipation, recognition, evaluation, and control of health hazards in the workplace.

Licensed healthcare professional.—Person who's legally permitted scope of practice allows him or her to independently perform the activities required by OSHA 29 CFR 1910.1030, paragraph (f), Hepatitis B Vaccination and Post-Exposure Evaluation and Follow-Up.

NASA Procedural Requirement (NPR)

Occupational exposure.—Reasonably anticipated skin, eye, mucous membrane, or other parenteral contact with human blood or other potentially infectious materials that may result from the performance of an employee's duties.

Occupational Safety and Health Administration (OSHA)

Operations (Ops) Team.—Team within the Safety and Health Division.

Other potentially infectious materials (OPIM).—Human body fluids such as synovial fluid, pericardial fluid, peritoneal fluid, and any body fluid that is visibly contaminated with blood, and all body fluids in situations where it is difficult or impossible to differentiate between body fluids.

Parenteral.—Entering the body through some other way besides the digestive tract, such as through the mucous membranes by piercing or through the skin by events such as needle sticks, human bites, cuts, and abrasions.

Personal Protective Equipment (PPE).—Specialized clothing or equipment worn by an employee for protection against a hazard. Examples include gloves, goggles, face shields, and coveralls.

Plum Brook Station (PBS) Team.—Team within the Safety, Health and Environmental Division.

Safety and Health Division (SHeD)

Sharps.—Medical slang for needles or other sharp objects.

Sharps with engineered sharps injury protections.—Non-needle sharp or needle device used for medicinal purposes that has a built-in safety feature or mechanism that effectively reduces the risk of an exposure incident.

Source individual.—Individual, living or dead, whose blood or other potentially infectious materials may be a source of occupational exposure to an employee.

System for Administration, Training, and Educational Resources for NASA (SATERN)

Universal precautions.—Approach to infection control that treats all human blood and certain human body fluids as if known to be infectious for the human immunodeficiency virus, hepatitis B virus, or other bloodborne pathogens.

Work practice controls.—Controls that reduce the likelihood of exposure by specifying the manner in which a task is performed. An example is prohibiting the recapping of needles by a two-handed technique.

Contents

1.0 PURPOSE....2
2.0 APPLICABILITY....2
3.0 BACKGROUND....2
4.0 POLICY....2
5.0 RESPONSIBILITIES....2
SHeD Industrial Hygienist (IH) and IEQ Program Lead shall....2
5.1 Industrial Hygiene Technician/Technical Specialist shall....3
5.2 SHeD Operations Team, Medical Services shall....3
5.3 Facilities Division (FD)....3
5.3.1 Building Managers shall....3
5.3.2 Building Mechanical Systems Manager shall....3
5.3.3 Systems Managers shall....4
5.3.4 Water Intrusion Response Team Coordinator shall....4
5.4 Construction Contractors shall....4
5.5 Logistics and Technical Information Division (LTID), Facility Operations Specialist, COTR shall....4
5.6 SHeD Management shall....4
5.7 Supervisors (Research, Laboratory, and Shop Areas) shall....4
5.8 Employees (Research, Laboratory, and Shop Areas) shall....5
5.9 Supervisors (Office Areas) shall....5
5.10 Employees (Office Areas) shall....5
5.11 Clean Team shall....5
6.0 REQUIREMENTS....5
7.0 RECORDS....6
Maintained by SHeD....6
8.0 REFERENCES....7
APPENDIX A .—DEFINITIONS AND ACRONYMS....9
APPENDIX B .—GLENN RESEARCH CENTER THERMAL COMFORT GUIDELINES: JULY 2009....11

Chapter 12—Indoor Environmental Quality

NOTE: *The current version of this chapter is maintained and approved by the Safety and Health Division (SHeD). The last revision date of this chapter was April 2012. The current version is located on the Glenn Research Center intranet at http://smad-ext.grc.nasa.gov/shed/pub/ohpm/ohpm-manual.pdf. Approved by: Chief of Safety and Health Division.*

1.0 PURPOSE

This chapter establishes procedures and practices for the Indoor Environmental Quality (IEQ) program at the Glenn Research Center (GRC) and Plum Brook Station (PBS).

The objective of the IEQ program is to provide healthful indoor environments through proper facility design, operation, and maintenance. The program also provides a mechanism for resolving concerns about IEQ.

Please note that policies regarding the safe use of and regulatory requirements for hazardous chemicals (e.g. lead, cadmium, chromium VI, asbestos, and carcinogens) are covered in other chapters of this manual.

2.0 APPLICABILITY

The provisions of this document are applicable to SHeD personnel as well as other NASA Glenn Research Center persons responsible for the implementation of SHeD program chapters.

3.0 BACKGROUND

Good IEQ is important to ensure a healthy and productive work environment. IEQ is affected by a variety of factors, including building design, occupancy loading, and the work being performed. IEQ issues are commonly associated with nonindustrial, non-laboratory office buildings where typical office operations (use of copy machines, laser printers, and retail chemical products), building products (carpets, furniture, draperies, etc.), or smoking, combined with improperly designed, used, or maintained heating, ventilation and air conditioning (HVAC) systems may create an irritating or unhealthful environment.

The variety of work performed at GRC poses special concerns for IEQ. Few buildings are dedicated office-only space. Instead, it is common to have office space co-located in buildings with research laboratories or shop areas. IEQ is also affected by maintenance and renovation activities in Center facilities. As a result, unusual odors may indicate a loss of contaminant control in laboratory or shop operations or poorly controlled construction and maintenance activities.

As a result of employee concerns over chemical hazards, complaints of unusual odors in the workplace are the most common IEQ issue at the Center. These complaints receive a high level of attention and response.

Combustion exhaust products from various facilities are another contributor to poor IEQ at the Center. Stack heights are limited at the Center because of its proximity to Cleveland Hopkins Airport so that combustion exhaust is released near the ground and may enter air intakes of nearby buildings, resulting in a strong odor of jet exhaust indoors. Exhaust from motor vehicles idling near building fresh air intakes is another source of combustion products.

4.0 POLICY

It is GRC policy to provide a healthful indoor environment that complies with Federal, State, and local regulations and applicable national consensus standards. This policy will be implemented through proper design, operation, and maintenance of building systems.

Good IEQ will also be implemented through compliance with GSA Bulletin FPMR D–245, which prohibits the smoking of tobacco products in all interior space and in any outdoor areas in front of air intake ducts.

5.0 RESPONSIBILITIES

- SHeD Industrial Hygienist (IH) and IEQ Program Lead shall provide guidance on the requirements of Federal, State, and local ventilation regulations as well as on standard industry guidelines

- provide technical guidance and support on minimizing the impact of construction, renovation, and maintenance activities on indoor air quality
- serve as the focal point for receiving and investigating IEQ complaints at GRC facilities
- conduct IEQ surveys as necessary to evaluate IEQ hazards
- recommend corrective actions to resolve IEQ problems
- provide building managers with information gained from investigations
- maintain a log of IEQ complaints
- advocate for funding of projects to correct high-priority problems
- serve as SHeD's member to the clean team to address Center-wide IEQ issues requiring coordination between the Facilities Division (FD), the Logistics and Technical Information Division (LTID), and SHeD
- refer employees to Medical Services for evaluation if warranted
- serve as the focal point for receiving and investigating IEQ complaints at PBS facilities
- maintain records in accordance with Section 7.0
- maintain the GRC Thermal Comfort Guidelines (see Appendix **B**)

5.1 Industrial Hygiene Technician/Technical Specialist shall

- conduct field calibration of IEQ sampling equipment
- perform surveys as required: visual, sampling, infrared (IR) imaging
- prepare samples for analysis and forward them to either the in-house or third-party laboratory

5.2 SHeD Operations Team, Medical Services shall

- provide medical evaluations of employees experiencing IEQ related symptoms
- notify IEQ Program Lead by phone or e-mail the names of employees who may require exposure evaluation based on clinical findings

5.3 Facilities Division (FD)

5.3.1 Building Managers shall

- notify the IEQ Program Lead when IEQ concerns are brought to their attention
- assist the IEQ Program Lead in conducting IEQ investigations by providing pertinent information on building layout and activities and by providing access to areas within the building
- assist the IEQ Program Lead in distributing information to the building occupants
- assure that corrective action is taken regarding routine maintenance or repairs as they pertain to IEQ
- attend Indoor Environmental Quality Awareness training from System for Administration, Training, Education Resources for NASA (SATERN course number: GRC–4R1632)

5.3.2 Building Mechanical Systems Manager shall

- ensure that building and HVAC system designs and modifications meet the requirements of the American National Standards Institute (ANSI) and the American Society of Heating, Refrigerating and Air-Conditioning Engineers (ASHRAE) standards 55 and 62.1, respectively, and do not adversely affect local exhaust ventilation systems.
- ensure that architects and engineers involved in the purchase or modification of local exhaust ventilation systems are trained in ventilation design for contaminant control

5.3.3 Systems Managers shall

- design and implement construction and maintenance projects in a manner that minimize their impact on indoor air quality
- maintain building systems in good working order to reduce the potential for indoor air quality problems
- assist the IEQ Program Lead in identifying and correcting indoor air quality problems
- ensure that construction projects are managed and implemented in a way that will minimize impact on local building occupants (i.e., minimize dust generation, noise, and chemical entrainment in buildings)
- provide pest control services in accordance with the General Services Administration (GSA) publication Integrated Pest Management (IPM) for Buildings
- consider the impact on IEQ in space management activities
- participate on IEQ Clean Team

5.3.4 Water Intrusion Response Team Coordinator shall

- address water damage events as soon as practicable to reduce the possibility of mold growth
- Notify SHeD IEQ Program Lead of water damage events as soon as possible (within 8 hours) to ensure an evaluation of the extent of the damage is properly performed and documented.
- oversee mold remediation work as needed to correct facility hazards; this work includes maintenance and larger scale projects

5.4 Construction Contractors shall

- provide, manage, and implement construction projects that minimize impact on local building occupants
- comply with all Occupational Safety & Health Administration (OSHA) regulations as well as with the GRC program

5.5 Logistics and Technical Information Division (LTID), Facility Operations Specialist, COTR shall

- oversee contract housekeeping services that promote employee well-being
- maintains carpets and floors in accordance with best practice measures (Note: Guidelines for carpet maintenance are provided by the Carpet and Rug Institute (CRI) with the exception that frequency of vacuuming may be in accordance with recommendations of the Restoration Industry Association RIA
- uses safe cleaners in housekeeping tasks
- dry all wetted carpets as soon as possible (24-48 hours) to reduce mold growth
- participates on IEQ clean team
- select carpets, cushions, and adhesives labeled under the CRI indoor air quality (IAQ) testing program and installs carpets in accordance with the CRI with assistance from the FD architectural systems manager, SHeD. (Note: carpet should not be installed under water coolers or other areas where chronic moisture promotes the growth of bacteria and fungi (mold).) SHeD Management shall
- update and maintain Center smoking policy based on Federal requirements

5.6 Supervisors (Research, Laboratory, and Shop Areas) shall

- ensure that local exhaust ventilation (LEV) is used and operated in accordance with applicable standard operating procedures (SOPs), safety permits and/or the requirements of the Occupational Health Program Manual (OHPM) Local Exhaust Ventilation chapter to prevent fugitive contaminants from entering the general work space and office areas
- report to the IH any LEV that does not appear to adequately control employee exposure to air contaminants or has been modified in a way that may adversely affect airflow

5.7 Employees (Research, Laboratory, and Shop Areas) shall

- operate LEV in accordance with this chapter and OHPM Chapter 7, Local Exhaust Ventilation
- report to supervisor any LEV that does not appear to adequately control employee exposure to air contaminants or has been modified in a way that may adversely affect airflow
- complete IAQ questionnaire provided by IEQ Program Lead when needed

5.8 Supervisors (Office Areas) shall

- be familiar with the requirements of this chapter and ensure their employees comply with them
- support the IEQ program as it relates to the needs of their employees
- ensure that office refrigerators are maintained free of spoiled food
- support the IEQ Program Lead in identifying areas of concern
- consider employee sensitivities with respect to office housing decisions. (e.g., employee with reported cat allergy or asthma sharing space with animal owner)

5.9 Employees (Office Areas) shall

- comply with all aspects of the program
- notify the Building Manager and IEQ Program Lead with IEQ concerns
- support the IH in identifying areas of concern
- maintain all house plants adequately so dead foliage does not accumulate; do not overwater plants as this may damage other materials and become a source for mold growth
- if possible, keep office doors open to allow for better cross ventilation
- make office areas accessible for the cleaning staff so routine vacuuming can be performed
- report source of new and on-going water damage to walls, ceilings, carpeting, and so on to the Building Manager and IEQ Program Lead
- maintain offices, refrigerators, and microwave ovens free from spoiled food and in a sanitary condition
- reduce office clutter so as to allow for cleaning

5.10 Clean Team shall

Provide recommendations to improving systems as an advisory team for the purpose of creating healthy workplaces.

6.0 REQUIREMENTS

- Construction and maintenance activities in occupied buildings must be planned and managed to minimize the release of dust, vapors, fumes, and other air contaminants to protect workers and building occupants. See OSHA Technical Manual Section III, Chapter 2 (V)(B)(2)(h).
- Proper carpet maintenance, regular vacuuming using a vacuum equipped with high-efficiency filters, and deep cleaning every 12 to 18 months or manufacturer's recommendation are required to increase the life of a carpet and help ensure that carpets do not become a source of dust, mold, bacteria, and other indoor air contaminants. Selection of low-emission carpets, cushions, and adhesives is required to minimize indoor air quality problems with new carpet installations.
- Integrated pest management techniques are more effective in controlling insects and rodents and also reducing indoor air quality problems created during pesticide applications. See EPM Chapter 21 on Pest Control.

- Parked vehicles are not allowed to remain running unless it is necessary to carry out a task. If vehicles must remain running, locate the vehicle so the exhaust does not become entrained into the building.
- Supply air vents or return air grills must not be obstructed. Blocking these units can cause the HVAC system to become unbalanced or can adversely affect the ventilation of a neighboring office. Furniture, boxes or other materials stored near supply vents or return grills will affect airflow.
- Access panels to window fan coil units should not be blocked. Blocking access panels with heavy furniture prevents proper preventive maintenance, such as changing filters and cleaning the unit.
- Partitions and modular furniture can obstruct airflow and lead to temperature extremes, especially in areas where window fan coil units are used. Select modular furniture that is as short as possible and allows airflow underneath.
- Keep windows closed. Opening windows will adversely impact the ventilation system, causing it to overcompensate to keep up with the temperature demands. This overcompensation will lead to even greater temperature extremes in the room. Allowing unconditioned air into the room may also increase the humidity that in turn can contribute to microbial growth or sinus irritation. Temperature adjustments for rooms should be accomplished by using the thermostat in the room, controlling the fan speed, and closing drapes or blinds. Opening windows also allows unfiltered air into the building. This means much of the dusts, pollen, and spores that normally get filtered will be brought into the building. These can adversely affect sensitive individuals. If you think your HVAC system is not working properly, contact maintenance.
- Comply with the GRC smoking policy. When smoking outside, do not smoke near air intake systems or near doors where the smoke can easily become entrained into the building. (GSA Bulletin FPMR D–245)
- Clean up personal water spills promptly and report water leaks right away. Water creates a hospitable environment for the growth of mold and bacteria. Call maintenance to fix any water leaks and call housekeeping to have water damaged material dried immediately. Water damaged material should be thoroughly dried within 24 hours, if possible, to reduce a need for more intensive cleaning.
- Maintain plants properly. It is possible for microbes to grow in the soil and on the leaves of plants. Water spills can also provide an adequate environment for growing mold or bacteria. Plants should not be placed on top of window fan coil units. When leaves fall into the unit they can block the condensate drain line and cause the unit to overflow. They can also emit odors as they rot and can provide a good environment for microbial growth. The leaves also affect the ability of the unit to perform as designed.
- Dispose of garbage promptly and properly.
- Store food properly. Food attracts pests and when some foods are left unrefrigerated, they can spoil and generate unpleasant odors. Never store perishable foods in desks or on shelves. Refrigerators should be cleaned on a regular basis to prevent odors. Keep kitchens and dining areas clean and sanitized to prevent pests. If food is spilled in microwave ovens, clean it up promptly.
- Ensure housekeeping personnel have access to rooms so they can properly maintain carpets.
- Notify the Building Manager and IEQ Program Lead immediately if an IEQ problem is suspected.

  http://fd.grc.nasa.gov/index.cfm?act=bldgmgr

6.0 The SHeD verification requirements for this section will include review of construction health and safety plans (HASP's) and building inspection reports for issues pertaining to indoor environmental quality. SHeD verification will also include IEQ Program Lead participation in Clean Team and project planning meetings.

7.0 RECORDS

Maintained by SHeD

- Log of IEQ complaints*

- IEQ e-mail reports including laboratory report, if any*
- IEQ instrument calibration records*
- Chain of custody for external laboratory samples *
- IEQ questionnaires, if used*

*Items above marked with an asterisk (*) shall be maintained for at least 30 years.

Training Records

Building Manager training records for Indoor Environmental Quality Awareness training (SATERN course number: GRC–4R1632) are maintained in System for Administration, Training, Education Resources for NASA.

8.0 REFERENCES

Document number	Document name
ACGIH	The American Conference of Governmental Industrial Hygienists: Bioaerosols: Assessment and Control, 2007 edition
AIHA	American Industrial Hygiene Association: Field Guide for the Determination of Biological Contaminants in Environmental Samples, Fairfax, VA, 2005
ANSI/ASHRAE Std. 55–2010	American Society of Heating, Refrigerating and Air-Conditioning Engineers: Thermal Environmental Conditions for Human Occupancy http://www.ashrae.org/
ANSI/ASHRAE Std. 62.1–2010	American Society of Heating, Refrigerating and Air-Conditioning Engineers: Ventilation for Acceptable Indoor Air Quality http://www.ashrae.org/
CCA 82–2004	Canadian Construction Association: Mould Guidelines for Canadian Construction Industry, Standard Construction Document CCA 82–2004, Ottawa, Ontario, CCA, 2004
CRI	Carpet and Rug Institute: Commercial Carpet Maintenance Manual. http://www.carpet-rug.org/index.cfm
CRI	Carpet and Rug Institute: Carpet Maintenance Guidelines for Commercial Applications, 2004 http://www.carpet-rug.org/index.cfm
CRI 104 - 2002	Carpet and Rug Institute: Standard for Installation of Commercial Carpet, CRI 104–2002 http://www.carpet-rug.org/index.cfm
CRI 105 - 2002	Carpet and Rug Institute: Standard Industry Reference Guide for Installation of Residential Textile Floor Covering Materials, CRI 105–2002 http://www.carpet-rug.com/pdf_word_docs/105.pdf
CRI	Carpet and Rug Institute: Floor Covering Maintenance for School Facilities http://www.carpet-rug.org/index.cfm
EPA	Environmental Protection Agency: Indoor Air Quality http://www.epa.gov/iaq/
EPM Chapter 21	Environmental Programs Manual: Pest Control http://smad-ext.grc.nasa.gov/shed/pub/epm/epm-manual.pdf
GRC Thermal Comfort Guidelines	NASA Glenn Research Center: GRC Thermal Comfort Guidelines, Appendix **B**, July 2009
GSA	General Services Administration: Integrated Pest Management (IPM) for Buildings: Desk Guide for Facilities Managers http://gsa.gov/portal/content/104931

GSA	General Services Administration: Integrated Pest Management Program Contract Guide Specification http://gsa.gov/ipm
GSA Bulletin FPMR D-245	General Services Administration: Protecting Federal Employees and the Public from Exposure to Tobacco Smoke in the Federal Workplace, Federal Register Document 62 FR 54461, October 20, 1997
NPR 1800.1	NASA Procedural Requirements, NASA Occupational Health Program Procedures
NIOSH	National Institute of Occupational Safety and Health (NIOSH): NIOSH Safety and Health Topic: Asphalt fumes http://www.cdc.gov/niosh/topics/asphalt/
OHPM Chapter 7	Occupational Health Program Manual: Local Exhaust Ventilation
OSHA	Occupational Safety and Health Administration: Indoor Air Quality (proposed rule filed April 4, 1994), Federal Register Document 94–7619
OSHA	Occupational Safety and Health Administration: OSHA Technical Manual, Section III, Chapter 2, Indoor Air Quality Investigation, January 20, 1999
SMACNA	Sheet Metal and Air Conditioning Contractors' National Association (SMACNA): IAQ Guidelines for Occupied Buildings under Construction http://www.smacna.org/
State of MN Rule 5205.0110	State of Minnesota: Indoor Workroom Ventilation and Temperature, June 11, 2008

APPENDIX A.—DEFINITIONS AND ACRONYMS

Adaptive comfort standard (ACS)

American National Standards Institute (ANSI).—Oversees the creation, promulgation, and use of thousands of norms and guidelines that directly impact business in nearly every sector from acoustical devices to construction equipment, from dairy and livestock production to energy distribution, and many more; is also actively engaged in accrediting programs that assess conformance standards, including globally recognized cross-sector programs, such as International Standards Organization (ISO) 9000 (quality) and ISO 14000 (environmental) management systems

American Society of Heating, Refrigerating and Air-Conditioning Engineers (ASHRAE).—An international organization that was founded in 1894 and has 51,000 members; fulfills its mission of advancing heating, ventilation, air conditioning and refrigeration to serve humanity and promote a sustainable world through research, standards writing, publishing, and continuing education

Restoration Industry Association (RIA).—Formerly the Association of Specialists in Cleaning and Restoration (ASCR); the oldest and largest nonprofit, professional trade association dedicated to providing industry leadership, supporting science, and promoting best practices in the cleaning and restoration industry

Canadian Construction Association (CCA).—Founded in Ottawa in 1918 to keep members on the leading edge of industry practices with communications, promotion and information, professional guidance and industry directories, research and analysis

Carpet and Rug Institute (CRI).—Science-based source for facts on carpet and rugs; a nonprofit trade association representing the manufacturers of more than 95 percent of all carpet made in the United States, as well as their suppliers and service providers

Certified industrial hygienist (CIH).—Industrial hygienist certified by the American Board of Industrial Hygiene (ABIH) for meeting the minimum requirements for education and experience, and through examination has demonstrated a minimum level of knowledge in the following subject matter areas: air sampling and instrumentation; analytical chemistry; basic science; biohazards; biostatistics and epidemiology; community exposure; engineering controls/ventilation; ergonomics; health risk analysis and hazard communication; management; noise; non-engineering controls; radiation (ionizing and non-ionizing); thermal stressors; toxicology; and work environments and industrial processes

Environmental Protection Agency (EPA).—Federal agency established in 1970 and charged with protecting human health and the environment; develops and enforces environmental regulations, performs environmental research, and provides financial support for state and educational research on the environment

Exposure evaluation.—A subset of an indoor environmental quality survey; a workplace survey for hazardous materials and contaminants potentially affecting the indoor air quality; conducted by an industrial hygienist or an industrial hygiene technician. Air monitoring may be conducted by an industrial hygienist, industrial hygiene technician, or safety and health specialist under the direction of an industrial hygienist.

Federal Register (FR).—The official journal of the U.S. Federal Government since March 14, 1936; contains most routine publications and public notices of government agencies and is published daily except for holidays

General Services Administration (GSA).—Central management agency that sets Federal policy for procurement and real property management and information resources management

Heating, ventilation and air conditioning (HVAC).—Term generally used to describe a building's comfort system. In older buildings, heating, ventilation, and air conditioning may be separate, but usually these services are integrated into a single system that conditions air which is distributed through ductwork.

Industrial hygienist.—Professional qualified by education, training, and experience to anticipate, recognize, evaluate, and develop controls for occupational health hazards and environmental issues

Indoor air quality (IAQ).—Acceptable indoor air quality defined by ASHRAE as air in which there are no known contaminants at harmful concentrations as determined by cognizant authorities and air in which 80 percent or more people exposed do not express dissatisfaction

Indoor environmental quality (IEQ).—Encompasses all aspects of the indoor setting, including air quality, ventilation, thermal comfort, lighting, and noise

Infrared (IR) imaging.—Used to rapidly identify differences in temperature by measuring thermal energy emitted from the object being viewed (e.g., wet objects that are drying are typically cooler, or bluer, than dry objects because of the cooling effect of evaporation)

Local exhaust ventilation (LEV).— Type of ventilation that removes contaminated air directly at its source and helps to reduce worker exposure to airborne materials more effectively than general ventilation because it does not allow the material to enter the work environment

NASA Procedural Requirements (NPR).—Establish procedural requirements for conducting audits, reviews, and assessments to verify compliance with the NASA Safety and Mission Assurance (SMA) process

National Institute of Occupational Safety and Health (NIOSH).—An agency of the Health and Human Services Department and was founded in 1970 as part of the Occupational Safety and Health Act; is tasked to provide national leadership to prevent work-related illness, injury, disability, and death by gathering information, conducting scientific research, and translating the knowledge gained into products and services, and to make recommendations to OSHA for new or revised safety and health standards

Occupational Safety & Health Administration (OSHA).—Federal agency established in 1970 charged with protecting human health and the environment; develops and enforces environmental regulations, performs environmental research, and provides financial support for State and educational research on the environment

OHPM.—Occupational Health Program Manual

Safe cleaners.—Those that have been reviewed and approved by SHED for use at the Center (http://smad-ext.grc.nasa.gov/shed/sustainibility/p2/preferable-product.shtml)

SHeD.—Safety and Health Division

Sheet Metal and Air Conditioning Contractors' National Association (SMACNA).—Developed and published the Duct Cleanliness for New Construction Guidelines, which is intended to help commercial duct installation contractors, engineers, and building owners achieve a clean, full-performance duct system

Standard operating procedure (SOP).—A document that describes the regularly recurring operations relevant to the quality of the investigation; its purpose is to carry out the operations correctly and in a consistent manner.

SATERN.—System for Administration, Training, Education Resources for NASA

APPENDIX B.—GLENN RESEARCH CENTER THERMAL COMFORT GUIDELINES: JULY 2009

Purpose

The purpose of these guidelines is to simplify and standardize thermal comfort responses by the Facilities Division (FD) and the Safety and Health Division (SHeD) during heating, ventilation, and air conditioning (HVAC) system malfunctions and unseasonable weather conditions. The guidelines primarily address threshold temperatures for GRC administrative/office areas; they are not intended to address areas that require special indoor design environments, such as computer rooms, clean rooms, and research laboratories.

This discussion focuses on the majority of thermal discomfort complaints. A strict evaluation of what is safe or unsafe for temperature exposure is impossible to ascertain because of the wide variability of both subjective and actual physical responses in individuals.

This document is to be used as a tool by supervisory personnel who may want to seek a professional opinion from a SHeD Industrial Hygienist regarding general area (office and laboratory) maximum/minimum temperatures and possible health effects.

It is assumed that these temperature excursions will be *temporary* (as the system is being repaired or unseasonable weather conditions have persisted) and that all other measures will be taken by FD and the occupants (opening windows, closing blinds, shutting off unused electric equipment, etc.)

General Environmental Temperature Standard

The FD maintains most offices and laboratory areas between 68 and 75 °F. Because of the numerous and wide variety of HVAC systems at the Center, some areas will be able to achieve higher or lower temperatures if desired by the occupants.

For energy conservation, during the off hours (6:00 p.m. to 6:00 a.m.), the setback temperatures of the buildings are allowed to fluctuate between 55 °F (winter) and 80 °F (summer).

Maximum and Minimum Temperature Guidelines

This GRC guideline uses only a dry-bulb temperature as an indicator of potential health hazards. However, the determination of this dry-bulb temperature has taken into account both humidity and air movement. The rationale for the single variable for temperature exposure (i.e., dry-bulb temperature) is to allow occupants to do an initial evaluation. Temperature readings are taken at the thermostat or desk level.

This temperature guideline is consistent with the adaptive comfort standard (ACS) for naturally conditioned spaces in ASHRAE Standard 55–2010 (Thermal Environmental Conditions for Human Occupancy).

Maximum Indoor Temperature Guideline

This guideline recommends that when the dry-bulb temperature of the work environment reaches **88 °F**, consideration be given either to moving the employees to a cooler environment (temporarily or permanently) or providing auxiliary cooling until such time that the temperature has been lowered. This temperature is an indicator of excessive heat that could affect the health or safety of employees. *The responsibility for the interpretation of this guidance rests with supervisory personnel.*

This guideline does not address the thermal discomfort that may be noticeable when working in temperatures lower than 88 °F. Occupants who are heat sensitive or have poor peripheral circulation should contact their supervisor to request temporary relocation to an unaffected work space.

Minimum Indoor Temperature Guideline

This guideline recommends that when the dry-bulb temperature of the work environment reaches the minimum air temperature of **65 °F**, consideration be given either to moving the employees to a warmer environment or providing auxiliary heating until such time that the temperature could be increased. *The responsibility for the interpretation of this guidance rests with supervisory personnel.*

This guideline does not address thermal discomfort that may be noticeable when working in temperatures above 65 °F. Occupants who are cold sensitive or have poor peripheral circulation should contact their supervisor to request temporary relocation to an unaffected work space.

Contents

1.0 PURPOSE 3
2.0 APPLICABILITY 3
3.0 BACKGROUND 3
4.0 POLICY 4
5.0 RESPONSIBILITIES 4
5.1 Laser Safety Officer (LSO) 4
5.2 Laser Safety Committee Chairperson (LSCC) 4
5.3 Laser Safety Committee (LSC) Members 5
5.4 Laser Safety Permit Requester 5
5.5 Laser User (Operator) 5
5.6 Laser User's (Operator's) Supervisor 5
5.7 Laser Facility Supervisor 5
5.8 Construction Laser Operator 5
5.9 Medical Director, Occupational Medicine Services 5
5.10 Human Capital Development Division Chief 5
5.11 Safety and Health Division Chief 5
5.12 Support Service Contractor Supervision 6
6.0 REQUIREMENTS 6
6.1 Training (*ANSI Z136.1*) 6
6.1.1 Laser Safety Instruction 6
6.1.2 Laser Facility Instruction and Training 6
6.1.3 Other Training 6
6.2 Medical Surveillance (*ANSI Z136.1, NASA NPR 1800.1*) 6
6.2.1 Eye Examination: Pre-Use 7
6.2.2 Skin Examination: Pre-Use 7
6.2.3 Eye and/or Skin Examination: Postincident 7
6.3 Laser Incident/Accident Response (*GLM–QSA 1700.1*) 7
6.4 Hazard Classification of Lasers (*ANSI Z136.1; (FDA) 21 Code of Federal Regulations (CFR) 1040.1*) 7
6.5 Laser Signage (*ANSI Z136.1*) 8
6.5.1 Class Warning Signs.—Required for All Areas Where Class 2 and Above Lasers Are In Use 8
6.5.2 Other Signs 9
6.5.3 Obtaining Signs 10
6.6 Labels for Lasers and Laser Systems (*ANSI Z136.1; FDA 21 CFR 1040.1*) 10
6.6.1 Specific Laser Labeling Requirements 11
6.7 Laser Standard Operating and Alignment Procedures (*ANSI Z136.1*) 11
6.8 Control Measures for Laser Activities (*ANSI Z136.1, 21 CFR 1040*) 12
6.8.1 General Discussion on Engineering and Administrative Controls 12
6.8.2 Entryway Controls 12
6.8.3 Class-Based Control Measures 13
6.9 Laser Safety Permit Process (*GLM–QSA 1700.1*) 14
6.9.1 Overview 14
6.9.2 Details 14
6.10 Requirements.—Construction Lasers ((*OSHA*) *29 CFR 1926.54; FAA Order 7400.2; Draft NASA Policy for Outdoor Laser Use; GLM–QSA–1700.1*) 15
6.10.1 Construction Laser Operator Training 15
6.10.2 Controls for Using Construction Lasers 15
6.10.3 Procedures for Construction Lasers 16
6.11 Inventory of High Power Laser Devices *(NASA NPR 1800.1)* 16
7.0 RECORDS 16
8.0 REFERENCES 16
APPENDIX A. —DEFINITIONS AND ACRONYMS 18

APPENDIX B. —LASER OPERATOR EYE EXAM CLEARANCE FORM 20

List of Figures

Figure 6.1.—Class 2 Caution Sign. 8
Figure 6.2.—Class 2M Caution Sign. 8
Figure 6.3.—Class 3R Danger Sign. 8
Figure 6.4.—Class 3a Caution Sign. 9
Figure 6.5.—Class 3b Danger Sign. 9
Figure 6.6.—Class 4 Danger Sign. 9
Figure 6.7.—Laser Controlled Area Caution Sign. 10
Figure 6.8.—Temporary Controlled Area Notice Sign. 10
Figure 6.9.—Illuminated Warning Sign. 10
Figure 6.10.—Aperture Label. 11

Chapter 13—Laser Safety

Note: *The current version of this chapter is maintained and approved by the Safety and Health Division (SHeD). The last revision date of this chapter was March 2012. The current version is located on the Glenn Research Center (GRC) intranet at http://smad-ext.grc.nasa.gov/shed/pub/ohpm/ohpm-manual.pdf. Approved by Chief of Safety and Health Division*

1.0 PURPOSE

This chapter provides requirements for the safe use of lasers and laser products at the GRC's Lewis Field and Plum Brook Station.

2.0 APPLICABILITY

This chapter is applicable to all civil servant and contractor employees assigned to GRC sites and to any NASA-controlled, Government-owned facilities associated with GRC. This document applies to the operation of lasers at wavelengths between 180 nanometer and 1 millimeter. Examples of lasers and laser systems that this document applies to may include

- commercially available lasers that are used as a part of an experiment or laser development
- commercially available lasers that have been modified, assembled, or incorporated into a device built by GRC personnel
- GRC designed or built lasers or laser systems
- commercially available devices utilizing high-power lasers for heat-dependent activities such as welding, parts prototyping, or laser cutting
- commercially available devices utilizing lower power lasers for analytical or construction-related activities

The evaluation of potential hazards associated with such lasers or laser systems is accomplished via the Center's safety permit process and construction health and safety plan review process.

This document does not apply to lasers incorporated into certain commercially available devices used by the general public, unless opened, serviced, modified, or incorporated into a device built by or for GRC, or as specifically addressed in this document. The laser safety officer (LSO) will determine which devices are to be covered by the Center's laser safety program. Although misuse of these lasers may pose a hazard, it is generally accepted that the risk of injury from these devices is minimal if used as intended by the manufacturer. Examples of these lasers and laser systems not covered by this document include compact disc players and laser printers.

Laser pointers, as defined by the Food and Drug Administration (FDA), are currently not subject to conditions within this chapter. Such FDA-compliant devices have very limited power output. The reader should be advised that many higher output "handheld" lasers are currently available in the market place, some at very low cost. These devices can pose a significant eye hazard and shall not be used as laser pointers. Those desiring to procure such devices for use in research activities should be aware that evaluations of such devices have shown that their actual output parameters may not match the specifications claimed by the manufacturer or distributor. Output power levels can vary (high or low) from those stated and the emission may include other wavelengths of laser energy, which can present an additional hazard. Questions about these high power handheld lasers should be addressed to the LSO.

3.0 BACKGROUND

A laser is a device that produces an intense, coherent directional beam of light energy. GRC personnel use many types of lasers, some posing little hazard to users and others that could cause significant harm if used improperly. The light characteristics of these lasers vary greatly. Wavelengths of emissions can range from the lower ultraviolet to the far infrared. Emissions can be continuous wave or pulsed. Power output can range from nanowatts to kilowatts.

As stated, using any laser involves exposure to varying degrees of hazards. Most lasers at GRC can injure the eyes of anyone who looks directly into the beam or its specular (i.e., mirrorlike) reflection. In addition, diffuse reflections created by some high-power laser beams can cause permanent eye damage. High-power laser beams can also burn exposed skin, ignite flammable materials, and heat materials so that they release hazardous fumes, gases, debris, or nonionizing radiation (i.e., plasma).

> ***Note:*** *The most common hazard when working with lasers is eye injury. To prevent such an injury, workers shall avoid looking directly into the laser beam or its specular reflections. This rule shall be followed regardless of the protective eyewear worn or the type of hazard classification of laser unless specifically authorized in support of research being conducted.*

The classification of lasers and laser systems is based on their ability to cause injury.

- Class 1 lasers (or laser systems) pose no hazard if used in their designed state.
- Class 1M lasers are considered not to pose a hazard to the eye during unaided viewing conditions but may pose an eye hazard over an extended period when collecting optics (e.g., eye loop, binoculars, or telescope) are in use.
- Class 2 and 3R (formerly 3a) lasers are considered low- to medium-hazard lasers and could cause eye damage if viewed directly and intentionally.
- Class 2M lasers are considered to pose low degree of hazard to the eye during unaided viewing conditions but may pose an eye hazard over a relatively short period when collecting optics (e.g., eye loop, binoculars, or telescope) are in use.
- Class 3b and 4 lasers are considered high-hazard lasers and require more stringent controls.

Equipment and optical apparatus required for producing and controlling laser energy also introduces other potential hazards, including high voltage, high pressure, cryogenics, noise, additional radiation, flammable materials, laser dyes and solvents, and toxic fluids and gases.

4.0 POLICY

This document describes the different types of lasers used at GRC, their classifications, and the required controls for each classification. It describes the responsibilities of personnel who work with lasers or supervise laser operations and identifies the training required for all GRC operations involving laser use. Unless specifically stated otherwise in this document, work standards for the safe operation of lasers and laser systems at GRC shall follow requirements of NPR 1800.1, "NASA Occupational Health Program Procedures," and the recommendations of the American National Standards Institute (ANSI) Z136.1–2007, American National Standard for Safe Use of Lasers, and ANSI Z136.6–2005, American National Standard for Safe Use of Lasers Outdoors, or their subsequent revisions. The Center's LSO is charged with establishing and maintaining adequate policies and procedures for the control of laser radiation hazards.

5.0 RESPONSIBILITIES

> ***Note***: *The LSO duties and responsibilities identified in Appendix A of the ANSI Z136.1 standard will be performed by either the GRC LSO or the Laser Safety Committee Chairperson (LSCC), as appropriate.*

5.1 Laser Safety Officer (LSO)

Shall ensure laser activities are conducted in accordance with NASA guidelines and recommendations made in the ANSI Z136.1 and Z136.6 standards for the safe use of lasers. The LSO is not necessarily the LSCC. If the LSO is not also the LSCC, then the LSO will serve as a member of the laser safety committee (LSC).

5.2 Laser Safety Committee Chairperson (LSCC)

Shall lead laser safety permit evaluations and provide guidance to the safety permit requester on how to satisfy permit conditions. The LSCC shall approve laser safety permits and has discretionary authority to waive permit

requirements as conditions may dictate. In addition the LSSC shall, in accordance with the Center's current safety permit process, maintain the documentation package (paperwork, procedures, drawings, etc.) that was used in evaluating the permitted activity.

5.3 Laser Safety Committee (LSC) Members

Participate in or, if designated by the LSCC, lead laser safety permit evaluations and, as needed, provide guidance to the safety permit requester on conditions of safe laser use. LSC members will provide input to the committee chairperson regarding the acceptability of the proposed laser activity being evaluated.

5.4 Laser Safety Permit Requester

Shall follow the SHeD process for obtaining a safety permit and to work with the LSC in satisfying conditions for the permit.

5.5 Laser User (Operator)

Shall satisfy training and medical surveillance requirements of this chapter in addition to working in a safe manner in accordance with established procedures for their lab, area, room, or cell. Laser users should express their concerns or questions regarding potential laser safety issues to their management or to the LSO.

5.6 Laser User's (Operator's) Supervisor

Shall ensure laser users meet requirements specified in applicable laser safety permits or those for/by any laser facilities. Also, for Support Service Contractors (SSC), supervisors may be required to maintain medical surveillance and training records.

5.7 Laser Facility Supervisor

Shall ensure their facility satisfies conditions for safe laser use designated by the laser safety permit or local procedures and shall verify that laser users/operators are following applicable procedures and safety precautions for the area.

5.8 Construction Laser Operator

Shall obtain training to become qualified for construction laser use and shall operate such laser products in accordance with the manufacturers' specifications and following general safe use practices. The construction laser operator shall maintain proof of their qualification in their possession at all times during laser use.

5.9 Medical Director, Occupational Medicine Services

Shall maintain complete, accurate records of all laser medical examinations for personnel in the medical surveillance program. Records shall be retained for at least 30 years. Results of examinations shall be discussed with employees as needed. For SSC, such records may alternately be maintained by the employer. The Medical Director shall also be responsible for identifying examination elements following a laser exposure incident.

5.10 Human Capital Development Division Chief

Shall maintain records for employee completion of laser safety courses and any associated examinations.

5.11 Safety and Health Division Chief

Shall provide support to the LSO and LSCC in the performance of their duties. In addition, the SHeD Chief shall satisfy applicable safety permit process requirements identified in accordance with the Center's current safety permit program.

5.12 Support Service Contractor Supervision

If applicable, maintain records for employee completion of radiation safety courses and any associated examinations as well as records of any medical evaluations or examinations triggered because of potential exposure to ionizing radiation.

6.0 REQUIREMENTS

Note: *The use of construction lasers for sighting and surveying activities is addressed in Section **6.10**.*

6.1 Training (*ANSI Z136.1*)

6.1.1 Laser Safety Instruction

Laser safety training at GRC is split into two training curriculums, one for those using higher (class 3B or 4) lasers and one for those using lower power (Class 2 or 3A/3R) lasers. As needed, the LSO can clarify questions regarding the need for laser safety training. Records of training completions shall be maintained by the Human Capital Development Division, or, in certain instances, by the SSC employer of a laser operator.

6.1.1.1 Laser Safety Training for Higher Power Lasers

Laser safety training shall be required for individuals who use Class 3B or 4 lasers or operate certain Class 1 laser systems that contain embedded Class 3b or 4 lasers. The source, content, and refresher periodicity of this training are specified by the GRC LSO. While this training is typically delivered via SATERN (System for Administration, Training and Educational Resources for NASA), it could alternatively consist of viewing training videos (from the Learning Center), classroom instruction, or other online or computer-based training. Periodic refresher training is required every 2 years (biennially).

6.1.1.1 - Employee completion of laser safety training is documented in SATERN, which is accessible by the reporting function of an administrative SATERN session.

6.1.1.2 Laser Awareness Training for Lower Power Lasers

The awareness level laser safety instruction was developed for those only working with lower power, Class 2 or 3R (formerly 3A), lasers. This laser awareness training shall be required for individuals who use or operate Class 2 or 3R/3A lasers that are covered by this document. The source, content, and refresher periodicity of this training are specified by the GRC LSO. The laser awareness training is typically provided via SATERN, although, an instructor-led course can be arranged with the LSO. Also, completion of the laser safety training for higher power lasers would satisfy this requirement. Periodic refresher training is required every 4 years.

6.1.1.2 - Employee completion of laser awareness training is documented in SATERN, which is accessible by the reporting function of an administrative SATERN session.

6.1.2 Laser Facility Instruction and Training

Laser users/operators shall also satisfy training and/or work experience requirements specified for the area, room, cell, or lab where the lasers are present. These requirements may be specified on the NASA **C–580**, "Qualified Operators List," (http://forms.grc.nasa.gov/forms/publicuser/index.cfm) associated with a laser safety permit, or in the local procedures for the area. Typically, users/operators will receive instruction on the specific hazards of the laser(s) used in the area, along with protection measures to ensure risks are minimized.

6.1.3 Other Training

The LSO may periodically coordinate more advanced laser safety training for GRC personnel.

6.2 Medical Surveillance (*ANSI Z136.1, NASA NPR 1800.1*)

6.2 – Any such medical records would be maintained by Occupational Medical Services. Alternately, such records

may be maintained by supervisor for Support Service Contractors.

6.2.1 Eye Examination: Pre-Use

Operators of Class 3b through 4 lasers shall receive a baseline eye examination before laser use. This examination entails a review of ocular history, test of visual acuity and determination of associated manifest refraction (if applicable), test of macular function (e.g., Amsler Grid), test of color vision tests (e.g., Ishihara), and examination of ocular fundus as described by NASA Procedural Requirement (NPR) **1800.1**, NASA Occupational Health Program Procedures.

An individual requiring an exam, or their supervisor, can contact the LSO or Occupational Medicine Services to receive directions on scheduling the examination. Arrangements with one or more local ophthalmologists or optometrist have been made for receiving the examination per NASA guidelines. Civil servants will receive their exam from one of these contracted physicians, the cost of which is paid by their organization. Contractor employees required to obtain a baseline exam may also use one of these contracted doctors.

The individual receiving the exam shall provide the ophthalmologist with the "LASER OPERATOR EYE EXAM CLEARANCE FORM" (included as Appendix **B** to this procedure and is available from the LSO or Occupational Medicine Services). The physician's office shall forward this form along with a copy of all examination results to GRC's Occupational Medicine Services who shall, in turn, forward a copy of the clearance form only to the LSO. The examinee should also retain the copy they receive for their records.

This examination policy also applies to students, interns, and other temporary laser research personnel. Exams costs for co-op students will be handled in the manner similar to civil servants. The GRC LSO and occupational health physician may approve of any exceptions to this policy according to the special circumstances of the case.

6.2.2 Skin Examination: Pre-Use

Examination of the skin is not required for pre-placement examinations of most laser workers; however, it is suggested for employees with history of photosensitivity who are working with ultraviolet lasers. Any previous dermatological abnormalities and family history are reviewed. Any current complaints concerned with the skin are noted as well as the history of medication usage, particularly concentrating on those drugs that are potentially photosensitizing.

6.2.3 Eye and/or Skin Examination: Postincident

Any employee with a known or suspected laser eye and/or skin injury shall contact GRC's Occupational Medicine Services to arrange for a post-exposure exam. This exam shall include those items listed above as deemed necessary by the facility occupational health physician.

6.3 Laser Incident/Accident Response (*GLM–QSA 1700.1*)

Notification, investigation, and documentation of incidents of actual or suspected exposure to potentially harmful laser radiation shall follow the process identified in Chapter **21** "Mishap and Close Call Reporting, Investigating, and Recordkeeping" of the Glenn Safety Manual.

6.4 Hazard Classification of Lasers (*ANSI Z136.1; (FDA) 21 Code of Federal Regulations (CFR) 1040.1*)

Classification of laser products is based upon the maximum output power or radiant energy available for the intended use. The LSO would normally rely on the manufacturer's information for most commercial laser products and not need to perform measurements of laser output. The LSO shall review the manufacturer's stated classification or that indicated on product labels to verify accuracy as it is not uncommon for manufacturer's to "over classify" devices in order to simplify their labeling requirements for a family of similar lasers.

6.4 – Laser hazards are reviewed during the safety permit evaluation process. As needed, any updates to laser or laser system hazard classification will be made during this review.

6.5 Laser Signage (*ANSI Z136.1*)

Signs shall be posted in visible locations at/near access points to facilities where Class 2 and above lasers are used. General requirements for signs are below. "Caution" signs shall have black letters/sunburst on a yellow background while "Danger" signs shall have red (and some black) letters/sunburst on a white background. Also, verbiage can vary somewhat on signs to convey specific information that is pertinent to the laser in use, but, the LSO will review the wording on signs/labels in use or proposed for use. The LSO should be consulted when questions about postings, signs, or labeling exist; he/she will provide direction to the laser facility supervisor or laser safety permit requestor.

6.5 – Use of appropriate laser signage is reviewed during the safety permit evaluation process. As needed, any additional signs or changes to signs will be made prior to permit issuance.

6.5.1 Class Warning Signs.—Required for All Areas Where Class 2 and Above Lasers Are In Use

Note: *Legacy signs and labels based upon previous versions of the ANSI Z136.1 standard, including those posted and those in stock, are allowed to be used for laser hazard communication.*

6.5.1.1 Class 2 Warning Sign.—CAUTION (Figure 6.1)

- A Caution sign
- Verbiage above the sunburst: "Laser Radiation, Do Not Stare Into Beam"
- Verbiage below the sunburst shall include information about the laser…type, wavelength, power or energy/pulse rate
- "Class 2" in the lower right-hand corner of sign

6.5.1.2 Class 2M Warning Sign.—CAUTION (Figure 6.2)

- A Caution sign
- Verbiage above the sunburst: "Laser Radiation, Do Not Stare Into Beam or View Directly With Optical Instruments"
- Verbiage below the sunburst shall include information about the laser including type, wavelength, power, or energy/pulse rate
- "Class 2M" in the lower right-hand corner of sign

6.5.1.3 Class 3R Warning Sign.—DANGER (Formerly Class 3a) (Figure 6.3)

- A Danger sign
- Verbiage above the sunburst: "Laser Radiation, Avoid Direct Eye Exposure"
- Verbiage below the sunburst shall include information about the laser including type, wavelength, power, or energy/pulse rate
- "Class 3R" (or "Class 3a") in the lower right-hand corner of sign

Figure 6.1.—Class 2 Caution Sign.

Figure 6.2.—Class 2M Caution Sign.

Figure 6.3.—Class 3R Danger Sign.

6.5.1.4 Class 3a Warning Sign.—CAUTION (Figure 6.4)

Note: *Under the pre-2007 classification scheme, CAUTION postings/labels were used with certain Class 3a lasers. Such lasers have been reclassified to 1M or 2M.*

- A Caution sign
- Verbiage above the sunburst: "Laser Radiation, Do Not Stare Into Beam or View with Optical Instruments"
- Verbiage below the sunburst shall include information about the laser including type, wavelength, power, or energy/pulse rate
- "Class 3a" in the lower right-hand corner of sign

6.5.1.5 Class 3b Warning Sign.—DANGER (Figure 6.5)

- A Danger sign
- Verbiage above the sunburst: "Laser Radiation, Avoid Direct Exposure to Beam"
- Verbiage below the sunburst shall include information about the laser including type, wavelength, power, or energy/pulse rate
- "Class 3b" in the lower right-hand corner of sign

6.5.1.6 Class 4 Warning Sign.—DANGER (Figure 6.6)

- A Danger sign
- Verbiage above the sunburst: "Visible and/or Visible Laser Radiation, Avoid Eye or Skin Exposure to Direct or Scattered Radiation"
- Verbiage below the sunburst shall include information about the laser including type, wavelength, power, or energy/pulse rate
- "Class 4" in the lower right-hand corner of sign

Figure 6.4.—Class 3a Caution Sign.

Figure 6.5.—Class 3b Danger Sign.

Figure 6.6.—Class 4 Danger Sign.

6.5.2 Other Signs

6.5.2.1 Specific Message Signs

Specific messages may be written on white/red and black Danger or yellow/black Caution signs with sunbursts. Examples of such pertinent precautionary instructions could include "Laser Alignment in Progress, Appropriate Eye Protection Required for Entry," "Restricted Area," "Do Not Enter When Light is ON," or "When these Enclosure Panels are Removed, This Area is Within a Laser Hazard Zone." Laser and class information may also be included on this sign, allowing it to satisfy the requirement for a Class warning sign.

6.5.2.2 Laser Controlled Area (Figure 6.7)

A yellow/black Caution sign with sunburst may be placed at the entrance to a room or area designated as being within the nominal hazard zone (NHZ) of a laser. One use example would be in a facility where there is no clear delineation for the laser area, such as in a high bay area that may house several different technical activities. This

will alert incoming personnel that a laser may be in operation. The appropriate wording can be any instructions the reader will need to know upon entering the area. Wording may specify "Authorized Personnel ONLY." A Laser Controlled Area sign would be in addition to the appropriate Class warning sign required above.

6.5.2.3 Temporary Controlled Area Signs (Figure 6.8)

A white/blue and black Notice sign with a sunburst may be used to denote temporary controlled laser areas during periods of servicing or maintenance. Verbiage on such a sign would be "Laser Controlled Area" or similar. The Notice sign is placed outside the controlled area while the appropriate danger warning (i.e., Class) sign is required within the controlled area.

6.5.2.4 Illuminated Signs (Figure 6.9)

Warning signs that are illuminated during laser activities provide an added safety measure since they reduce any potential complacency, which can develop when signs are continually posted. Such signs are highly recommended for existing Class 4 laser operations, especially those involving nonvisible wavelengths, and shall be required for any new Class 4 laser facilities. These lighted signs could be posted at the entrance to a laser controlled area to serve as a warning to individuals not to enter, or they could be posted within the controlled area as a reminder to operators that the laser is firing. Appropriate verbiage for these two scenarios could be "Laser On, Do Not Enter" and "Danger, Laser On," respectively. In the situation where the warning sign/light is placed within the laser controlled area, the light should be visible through the operator's laser protective eyewear. An alternative to an illuminated sign would be a similarly operated warning light/beacon that is immediately adjacent to a sign specifying the desired message or warning.

Figure 6.7.—Laser Controlled Area Caution Sign.

Figure 6.8.—Temporary Controlled Area Notice Sign.

Figure 6.9.—Illuminated Warning Sign.

6.5.3 Obtaining Signs

Many standard laser signs can be obtained from the LSO or their designee within SHED. Those signs not available from SHeD shall be procured by the organization sponsoring the subject laser facility. When signs are no longer needed for an area, they should be returned to the LSO who can facilitate their re-use. The LSO also has "Laser On, Do Not Enter" warnings that are used to create illuminated signs; the lighted box itself is not provided by SHeD. Wording on signs can be varied somewhat using label-making machines or by other methods, but, the wording on signs/labels in use or proposed for use shall be reviewed by the LSO.

6.6 Labels for Lasers and Laser Systems (*ANSI Z136.1; FDA 21 CFR 1040.1*)

Note: *Legacy signs and labels based upon previous versions of the ANSI Z136.1 standard, including those posted and those in stock, are allowed to be used for laser hazard communication.*

The Food and Drug Administration (FDA) requires that laser products be labeled by the laser or laser product manufacturer. One exception to this requirement would be lasers provided to original equipment manufacturers (OEMs) as components for manufacturing a product/system containing the laser. If such a laser was purchased, it may not have been appropriately labeled and the individual purchasing this device shall contact the LSO to ensure the laser is appropriately labeled and classified. In addition, the LSO shall be contacted when alterations or modifications are planned for a laser device as these might affect the laser classification.

Also, it is worth noting that manufacturers may "over label" their laser devices. That is, provide a more hazardous label warning than is required. Manufacturers typically do this in an effort to simplify their labeling process by

creating a generic label that works for a group of lasers. Manufacturers may also erroneously place a label on a laser with an erroneously lower class rating. Laser documentation should be consulted to confirm the exact class of the laser, or, such an inquiry can be addressed to the LSO. Again, the LSO should be consulted when questions about postings, signs, or labeling exist; they will provide direction to the laser facility supervisor.

6.6 – Use of appropriate laser labeling is reviewed during the safety permit evaluation process. As needed, any additional labels or changes to labels will be made prior to permit issuance.

6.6.1 Specific Laser Labeling Requirements

6.6.1.1 Class Warning Label – Class 2 and Above Lasers

Lasers shall be labeled with the appropriate Caution or Danger label, based on the laser's classification. The label specifications are identical to the class warning sign requirements specified above. If the laser is embedded within a device or housed in an enclosure, an appropriate label shall be placed on this outer surface to provide the needed warning.

6.6.1.2 Aperture Label

An aperture label (Figure **6.10**) shall be required on a laser or laser device to identify the laser emission point. Typically, this is a small label and may include an arrow pointing to the location of the beam output.

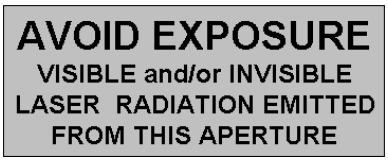

Figure 6.10.—Aperture Label.

6.6.1.3 Non-Standard Configurations and Labels

Certain laser configurations do not lend themselves to the standard application of labels. Examples include small diode laser devices, inadvertent obscuring by a jig, or connections of optical fibers carrying laser energy. Recognizing the intent of this requirement, which is hazard communication, other labeling accommodations may be utilized such as tethering labels on fibers near connections, or, relocating a label to a more conspicuous location.

6.6.1.4 Other Labels

As with signs, labels can also be used to communicate specific messages about a laser product. For example, a danger label reading "Removal of this Panel Makes This System a Class 4 Laser Device" could be applied to a removable panel on a Class 1 system containing an embedded Class 4 laser.

6.7 Laser Standard Operating and Alignment Procedures (*ANSI Z136.1*)

Class 3b and 4 lasers shall have written standard operating and alignment procedures that are approved by the LSO. These procedures are typically provided to the LSCC during the safety permit request process. If the LSC is not also the LSO, LSC shall forward the procedures to the LSO for review and approval. The LSC shall keep record of the LSO's approval on file with the corresponding laser safety permit. If one person acts as both the LSO and LSCC, the LSCC's signature on the laser safety permit (NASA **C–919**) shall denote their approval of the attached procedures.

The written procedures shall include a description of the laser(s) being used as well as the specific steps followed to ensure the device is being used safely. These steps may include a checklist of precautions to be observed or followed prior to laser activity. Specifications for laser protective eyewear shall also be included in the procedures by indicating the required optical density (O.D.) for each wavelength of interest. Requesters can get this information from the LSO.

Laser alignment activities, in particular, can pose a significant ocular hazard to users and the procedures outlining the methodology of the task are critical to minimizing this hazard. Again, if there is potential exposure to laser

radiation above the applicable maximum permissible exposure (MPE) level, then controls shall be followed. Approaches to performing alignments include

- Operating laser at lowest power setting that permits alignment
- Reducing laser power via other means (neutral density filter, and optical attenuator) during alignment
- Use of a coaxially oriented low-power alignment laser
- Use of burn paper, fluorescing paper/material, or other indicating medium to identify beam location
- Wearing protective eyewear when laser intensity (irradiance or radiant exposure) exceeds the applicable MPE
- Breaking down alignment activity into stages, the first being a "rough" alignment requiring various protective measures and the second being a "fine-tuning" alignment involving more procedural and work practice control measures
- Wearing skin protection (gloves and long sleeves) if aligning Class 4 lasers above the skin MPE
- Clearing area, room, lab, or cell of unnecessary personnel during alignment

Standard operating and alignment procedures do not need to reproduce detailed and complex laser operating procedures found in the manufacturer's instruction manuals. Rather, they can provide specific references to the procedures within such documents. As needed, the LSO or LSCC can provide some assistance in preparing the procedures.

6.7 – Written operating and alignment procedures are reviewed during the safety permit evaluation process and updated, as needed, prior to permit issuance.

6.8 Control Measures for Laser Activities (*ANSI Z136.1, 21 CFR 1040*)

6.8.1 General Discussion on Engineering and Administrative Controls

Aspects of the laser activity that influence the hazard evaluation and thereby, influence the application of control measures include (1) the laser or laser system's capability of injuring personnel or interfering with task performance, (2) the environment in which the laser is used, including access to the beam path (considering enclosures, baffle, beam, etc.), and (3) the personnel who may use or be exposed to laser radiation. Aspect (1) is fairly straightforward and is addressed by the ANSI laser safety standard. Aspects (2) and (3) can vary with each laser application and cannot be readily standardized. While the total hazard evaluation shall consider all aspects, typically aspect (1) has the greatest influence upon which control measures are applicable.

So, when the intensity of an accessible laser beam exceeds the applicable MPE level, appropriate controls shall be implemented to minimize the potential hazards to laser operators and bystanders. These measures include both engineering and administrative controls, with the former being the preferred course of action. "Accessible" laser beams are those that are not enclosed or contained, and are oriented such that the direct beam or inadvertently-reflected beam could pose a potential eye or skin hazard. Beam accessibility is typically greater during laser alignment activities, necessitating greater controls.

Typical engineering controls include (but are not limited to) protective housings/enclosures, interlocked entryways or beam enclosures, key control, beam path enclosures, beam stops/dumps, beam attenuators to limit output level, and shades/curtains over windows. Common administrative controls include alignment and operating procedures, emission output limitations, the use of protective eyewear, the use of skin protection, education and training, and the use of temporary barriers and curtains. As mentioned, the use of engineering controls is typically favored over administrative controls since the latter relies on a human-dependent variable.

6.8.2 Entryway Controls

Because open-beam configurations are commonly found in research environments such as the GRC, entryway controls are an important part of our safe-use practices. There are three basic options for controlling entry to a laser controlled area. Entryway controls shall be required for most Class 3b and 4 laser activities and the LSO shall be

responsible for specifying the type of control required for a laser facility. Individuals with questions about what entryway controls are required for a new facility can contact the LSO. The basic types are as follows:

6.8.2 – The use of engineering (e.g., interlocked access) and administrative (e.g., procedural) entryway controls is reviewed during the safety permit evaluation process. In addition, the proper operation of any interlocked safety features is verified.

6.8.2.1 Nondefeatable Controls

These utilize a built-in interlock switch that will "turn off" the laser beam (either secure power or close a shutter) when an entry door is opened. Nondefeatable entryway controls are to be used for long-term laser operation.

> *Note: Interlock features on enclosure access panels or facility/laboratory doors are to "Fail Safe," which means that the system goes into, and, remains in a safe mode. For example, a interlock system which has reacted to a door opening by securing the laser should not automatically re-enable the laser once the door has closed. Rather, a manual reset of the facility interlock system would be required.*

6.8.2.2 Defeatable Entryway Control

Similar to the "Nondefeatable Control" described above with the addition of a temporary (typically, 15- to 30-second) bypass, which will allow entry into an area without securing the beam. This type of control can be used if no laser beam hazard exists at the point of entry. Typically, there is also a procedural aspect to this type of control whereby the person entering or exiting the laser controlled area verifies that an individual who might be standing outside the door to the area will not be exposed to an emission hazard while the door is open. Defeatable entryway controls are to be used for long-term laser operation.

6.8.2.3 Procedural Entryway Controls

A door, blocking barrier, screens, curtains, etc., are used to block, screen, or attenuate the laser radiation at the entryway. The laser radiation at exterior of these devices shall not exceed the applicable MPE, nor shall any personnel experience any exposure above the MPE immediately upon entry. Procedural entryway controls are used only for temporary laser activities and only with the permission of the LSO. Sufficient warning signs are an important part of implementing these short-term measures.

6.8.3 Class-Based Control Measures

The control measures described below are general in nature for the specific class of laser being used. The LSO shall make a final determination of what control measures will be required for a facility and can modify these general requirements on a case-by-case basis. Note that laser classification during alignment activities may be higher than that during normal operation of some laser systems.

6.8.3 – Laser use controls and conditions are reviewed during the laser safety permit evaluation process and such requirements are specified on the laser safety permit (form C-919) and the written procedures. Requirements and use conditions for Construction Contractor Use of lasers would be called out in the HASP for the subject activity.

6.8.3.1 Class 2 and Class 2M Laser Control Measures

- Training, signs, and labels (see above)

6.8.3.2 Class 3R (Formerly Class 3a) Laser Control Measures

- Class 2 laser control measures
- Protective eyewear (if accessible beam intensity exceeds MPE)

6.8.3.3 Class 3b Laser Control Measures

- Class 3R laser control measures
- Baseline eye examination (see above)
- Alignment and operating procedures (see above)

- Entryway controls and/or interlocked beam enclosures (see above)
- Key controls

  Note: *Key control features are provided on high power lasers for the intent of preventing the inadvertent startup of such lasers. This safety feature lends itself well to laser use in an industrial environment rather than such activities at a government research facility. Consequently, the discretionary authority of the LSO may allow for alternate means or measures to satisfy the spirit of this specified control.*

6.8.3.4 Class 4 Laser Control Measures

- Class 3b laser control measures
- Skin protection (if accessible beam intensity exceeds skin MPE)
- For FDA compliant lasers, Class 4 laser devices are to have a manual reset feature on the system itself which must be actuated if the laser is automatically secured for safety purposes. This would be in addition to resetting the room interlock system.

6.9 Laser Safety Permit Process (*GLM–QSA 1700.1*)

6.9 – Safety permit documentation is maintained by the chairperson of the committee issuing the permit.

6.9.1 Overview

All laser operations covered by this procedure (see "APPLICABILITY" section) require a laser safety permit; the safety permit program is described in Chapter **1A** of the NASA Glenn Safety Manual. This process formalizes the hazard evaluation of laser activities and the resulting prescription of applicable control measures. The LSCC may waive the need for a safety permit if the conditions of use for the laser satisfy Class 1 criteria or if, based on their judgment, the circumstances of use offer sufficient protection for a temporary activity. In either case, that decision is up to the LSCC. When a safety permit is issued, the proposed laser operation is approved within the constraints listed on the safety permit, the corresponding qualified operators list, and the procedures and other documentation supporting the permit.

6.9.2 Details

6.9.2.1 Preparation and Request Submission

Requesters are encouraged to contact the LSCC directly early in the permit process if they have any questions regarding laser safety permits and the associated requirements/controls. As needed, LSC members or the LSCC will assist the requester in identifying specific controls to be implemented or actions to be conducted to satisfy typical conditions of a laser safety permit. The official permit paperwork and supporting documentation shall be submitted to the SHED administrative staff, who, in turn shall log the request and forward it to the responsible safety committee chair (in this case the LSCC). At a minimum, the paperwork shall include the permit request (NASA **C–923**) or permit renewal/change request (NASA **C–590**), a hazard analysis (NASA **C–923a**), and a qualified operators list (NASA **C–580**). Additional documentation provided with the request should include laser specifications and operating and alignment procedures.

6.9.2.2 Scheduling Reviews

Once the LSC chair receives the safety permit request (new or renewal/change), they will contact the "requester" designated on the permit to discuss the activity and arrange a time for the evaluation or possibly an informal pre-evaluation, which would be followed at a later time by the formal LSC evaluation. Typically, laser safety permit evaluations are conducted by the LSCC (or their designee) and at least one other member of the committee. At their discretion, the chair can limit the evaluation of a permit request to one reviewer. Candidate scenarios for a single reviewer could involve a simple permit request involving a low-hazard laser or the renewal of a permit involving a non-changing activity with good documentation on file.

6.9.2.3 Permit Evaluation

During the onsite evaluation of the proposed laser activity, the LSC shall meet with the safety permit requester and other pertinent staff to review the anticipated task and the specific use of laser radiation. Written operating and alignment activities shall also be assessed to determine their adequacy and accuracy. Being a center that conducts research activities, it is sometimes not possible to outline exactly how a laser will be used, so, in such cases the methodology and basic approaches to handling the laser radiation will be reviewed. During the laser permit review, the laser safety committee shall also verify the presence, adequacy, and functionality of any required interlock system(s), protective eyewear and other protective equipment, and any other safety features or control measures.

6.9.2.4 Scope of Laser Safety Permits

Like standard safety permits, laser safety permits are issued as a vehicle for assuring activities are conducted in a manner to minimize potential health and safety risks to employees. The scope of a laser safety permit is to address the eye and skin hazards associated with the use of the lasers. If an activity also involves nonlaser radiation hazards, then a second "standard" safety permit (issued by the appropriate "area" safety committee) might also be necessary, whether or not these hazards are directly associated with the laser. For example, excimer lasers consume toxic (health hazard) gas in generating the desired ultraviolet wavelength, or a microgravity experiment involving a pressurized (safety hazard) fuel (safety hazard) cylinder may use a high-power laser to visualize a combustion parameter. For each of these activities, both a standard safety permit and a laser safety permit would be required.

6.9.2.5 Safety Permit Expiration

Safety permits can be issued to cover time periods ranging from a day to several years. The periodicity of the permit renewal is left to the discretion of the LSCC, who signs/approves the permit. Safety permits and the associated qualified operators' list are to be posted outside the lab/room/cell where the activity is being conducted. Completed and expired permits shall be signed by the requestor and returned to the Safety and Health Division according to the procedures outlined in Chapter **1A** of the Glenn Safety Manual.

6.9.2.6 Laser Safety Permit Documentation

The chair of the LSC shall, in accordance with the Center's current safety permit process, maintain the documentation package (paperwork, procedures, drawings, etc.) that was used in evaluating the permitted activity.

6.10 Requirements.—Construction Lasers ((*OSHA*) *29 CFR 1926.54; FAA Order 7400.2; Draft NASA Policy for Outdoor Laser Use; GLM–QSA–1700.1*)

6.10 – Laser use controls and conditions for devices used by Construction Contractors are reviewed during the HASP evaluation process.

6.10.1 Construction Laser Operator Training

Operators of construction lasers shall receive training on proper and safe use of the laser products they operate. This training should be offered or coordinated by their employer and should satisfy the OSHA construction standard for "Nonionizing radiation." (29 CFR 1926.54) The employer for construction laser operators shall provide their operators with documentation of their laser use qualification. Per the OSHA standard, this proof of qualification shall be available and in the possession of the operator at all times during laser use.

6.10.2 Controls for Using Construction Lasers

Physical control measures for construction lasers are typically not required because of the lower powers involved with such lasers. Construction lasers, as described in this document, include commercially available products designed and intended for leveling/measuring activities with power emissions satisfying Class 3R (formerly Class 3a) limits for visible lasers and Class 1 for other wavelengths. Intentional misuse of low-power visible lasers, such as construction lasers, for the purpose of causing visual interference shall be prohibited. Visual interference with "critical tasks" (e.g., operating a vehicle or flying an aircraft) by Class 2 or 3R (formerly Class 3a) lasers is possible if they are intentionally used at dusk or night near airports or roads. Consequently, the use of visible construction lasers shall not be permitted during such time periods. This should have little impact on construction activities as such construction lasers are typically not used at night and would not be expected to create a direct or indirect hazard when operated by a "qualified" operator and when used as intended.

6.10.3 Procedures for Construction Lasers

6.10.3.1 Written Procedures for Safe Use of Construction Lasers

Contractors using construction lasers shall have established written procedures, which address, at a minimum, the following issues:

- use restriction to qualified persons
- methods undertaken to minimize direct eye potential (verifying beam path prior to firing, considering beam termination, not positioning at eye level, prohibiting intentional direct viewing, etc.)
- prohibited times of use (i.e., dusk or night)

6.10.3.2 Health and Safety Plan (HASP) for Construction Activity

The contractor's laser-use procedure/conditions shall be included in the HASP written for the involved construction task. The contractor should also provide the OSHA-required proof of qualification for their construction laser operator(s) with the proposed HASP. The SHED staff member charged with reviewing and approving HASPs shall approve the laser use on behalf of the LSO. Any questions regarding this document review shall be addressed to the LSO.

6.11 Inventory of High Power Laser Devices *(NASA NPR 1800.1)*

A comprehensive inventory of hazardous laser soures shall be maintained by the Center and periodically verified. This listing includes only Class 3B and 4 lasers or laser systems and identifies specific information about the device (hazard class, manufacturer, model #, serial #, NASA ECN), its location and a point of contact. The inventory will be verified and updated on an on-going basis by the LSO, SHED staff, and others.

6.11 – The inventory of Class 3B and 4 lasers is maintained electronically on the SHeD share drive

7.0 RECORDS

- Laser Safety Permit, NASA **C–919**, and supporting documentation—Maintained by the Laser Safety Committee Chairperson
- Training Records—Maintained by Human Capital Development Division. In the case of a Support Service Contractor, these records could be maintained by the employer.
- Medical Exam Records (Baseline and Others)—Maintained by Occupational Medicine Services. In the case of a Support Service Contractor, these records could be maintained by the employer.
- High Power Laser Device Inventory—Maintained by the Laser Safety Officer.

8.0 REFERENCES

Document Number	Document Name
21 CFR 1040	U.S. Food and Drug Administration, "Performance Standards for Light-Emitting Products," Section **1040.10**—Laser products
29 CFR 1926.54	Occupational Safety and Health Administration, "Construction Health and Safety Standards," Section **1926.54**—Nonionizing radiation
GLM–QSA–1700.1	NASA Glenn Safety Manual, Chapter **1A**—Safety Permit System
GLM–QSA–1700.1	NASA Glenn Safety Manual, Chapter **17**—Construction Safety
GLM–QSA–1700.1	NASA Glenn Safety Manual, Chapter **21**—Mishap and Close Call Reporting, Investigating and Record Keeping
NPR 1800.1	NASA Procedural Requirement, "**NASA Occupational Health Program Procedures**"

Order JO 7400.2	U.S. Federal Aviation Administration, **Part 6, Chapter 29—Procedures for Handling Airspace Matters, Outdoor Laser Operations**
Unassigned	Draft NASA Policy on Outdoor Laser Use, 2004
Z–136.1	American National Standards Institute, "American National Standards Institute for Safe Use of Lasers: Z–136.1," Publisher: Laser Institute of America, Orlando, FL, 2007.
Z–136.6	American National Standards Institute, "American National Standards Institute for Safe Use of Lasers Outdoors," Z–136.6, Publisher: Laser Institute of America, Orlando, FL, 2005.

APPENDIX A.—DEFINITIONS AND ACRONYMS

American National Standards Institute (ANSI)

Code of Federal Regulations (CFR)

Construction laser.—Commercially available laser products used for construction tasks such as alignment, surveying, or positioning. These lasers are limited to Class 3R (formerly 3a) emission limits for visible lasers (0.4 to 0.7 μm) and Class 1 output for other lasers.

Construction laser operator.—Individual who has received appropriate training for safe use of construction lasers and is also qualified to operate such lasers by their employer per OSHA's 29 CFR 1926.54.

Continuous wave laser.—A laser that emits for more than 0.25 seconds.

Diffuse reflection.—When an incident laser beam is reflected over a wide range of angles.

Fail Safe Interlock.—An interlock where the failure of a single mechanical or electrical component of the interlock will cause the system to go into, or remain in, a safe mode.

Food and Drug Administration (FDA)

Glenn Research Center (GRC)

Health and Safety Plan (HASP)

Irradiance.—Radiant power incident per unit area upon a surface, expressed in watts-per-square-centimeter. It is used to characterize a CW laser. Synonym: Power density.

Laser.—Acronym for light amplification by stimulated emission of radiation; a source of intense, coherent, directional beam of optical radiation.

Laser controlled area.—An area containing one or more lasers where the activity of personnel is subject to control.

Laser device.—Either a laser or a laser system.

Laser Safety Officer (LSO)

Laser Safety Committee (LSC)

Laser Safety Committee Chairperson (LSCC)

Laser system.—An assembly of electrical, mechanical, and optical components that include a laser.

Laser User and Laser Operator.—Used interchangeably as a person who uses a laser or laser system.

Laser user requirements.—Actions, tools, and equipment deemed necessary for safety and to monitor biological effects of laser use.

Maximum permissible exposure (MPE).—The level of laser radiation to which a person may be exposed without hazardous effect or adverse biological changes in the eye or skin.

National Aeronautics and Space Administration (NASA)

Nominal Hazard Zone (NHZ).—The space within which the level of the direct, reflected, or scattered radiation during normal operation exceeds the applicable MPE. Exposure levels beyond the NHZ are below the appropriate MPE level.

NASA Procedural Requirement (NPR)

Occupational Safety and Health Administration (OSHA)

Optical density (O.D.).—Logarithmic expression for the attenuation produced by an eye protection filter.

Original equipment manufacturer (OEM)

Radiant exposure.—Surface density of the radiant energy received, expressed in units of joules-per-centimeter squared (J/cm^2). It is used to characterize a pulsed laser.

Safety and Health Division (SHeD)

Shall.—Indicates a requirement that is necessary to meet the standards of protection currently in effect.

Should.—Indicates a recommendation that can be applicable.

Specular reflection.—Reflections from shiny surfaces.

Ultraviolet (UV)

APPENDIX B.—LASER OPERATOR EYE EXAM CLEARANCE FORM

NASA John H. Glenn Research Center
Occupational Medicine Services

21000 Brookpark Road, Mailstop 15-5
Cleveland, Ohio 44135
216.433.5841(ph) 216.433.6529(fax)

LASER OPERATOR EYE EXAM CLEARANCE FORM

EMPLOYEE NAME: _____ D.O.B.:_____

SUPERVISOR NAME: _____

☐ **Civil Servant (including Co-Op Students)**

☐ **OTHER (Contractor, non-Co-Op Students)**
Company Name: _____

This patient will be working with high powered lasers at the NASA Glenn Research Center. The eye examination should include the following:

☐ *Ocular History*

☐ *Visual Acuity and Manifest Refraction (if needed)*

☐ *Macular Function (e.g., Amsler Grid)*

☐ *Color Vision (e.g., Ishihara)*

☐ *Dilated Fundus Exam*

☐ *Fundus Photo (if available)*

Results:

☐ *The exam was within normal limits and this patient is cleared for laser operation.*

☐ *Other (explain in "Comments")*

Comments: _____

_____

_____ _____ _____
Physician's Signature ***Date*** ***Physician's Office Stamp/Info***

☐ **Return this form <u>and a copy of all examination results</u> to NASA GRC's Office of Occupational Medicine Services at the above address**

_____ _____
Reviewed by: ***Date***
Occupational Medicine Services
Singleton Health Services, L.L.C.

cc: GRC Laser Safety Officer

1/2008

Contents

1.0 PURPOSE....2
2.0 APPLICABILITY....2
3.0 BACKGROUND....2
4.0 POLICY....2
5.0 RESPONSIBILITIES....2
5.1 Initiator....2
5.2 Requestor....3
5.3 SHeD....3
5.4 Procurement Division....4
5.5 Logistics and Technical Information Division (at Plum Brook Station, SSC Shipping and Receiving (S&R) Personnel)....4
5.6 Building Managers and Supervisors....4
6.0 REQUIREMENTS....5
6.1 Purchasing Goals....5
6.2 Storage....5
6.3 Free Samples....5
6.4 Agency Exchange....5
6.5 University Exchange/Visiting Faculty....6
6.6 Delivery....6
7.0 RECORDS....6
8.0 REFERENCES....6
APPENDIX A .—Definitions and Acronyms....7
APPENDIX B .—Route Flow Chart....9

Chapter 14—Acquisition of Hazardous Chemicals and Materials

NOTE: *The current version of this chapter is maintained and approved by the Safety and Health Division (SHeD). The last revision date of this chapter is August 2012. The current version is located on the Glenn Research Center intranet at http://smad-ext.grc.nasa.gov/shed/pub/ohpm/ohpm-manual.pdf*
Approved by: Chief of Safety and Health Division.

1.0 PURPOSE

This chapter sets forth the policy and procedures for the acquisition of hazardous chemicals and materials, and describes the functions, responsibilities, and authority for the purchasing, processing, receiving, controlling, and shipping of hazardous chemicals and materials. These procedures are intended to provide for the acquisition of toxic, radioactive, flammable, corrosive, or otherwise hazardous chemicals and materials and for the initiation of proper review and approval considerations for their safe use. It is the Center's responsibility to see that all hazardous chemicals and materials are managed properly.

This chapter conforms to the Glenn Research Center (GRC) Environmental Management System (EMS) as defined in Glenn Procedural Requirements (GLPR) **8553.1C**. This chapter supports the GRC Environmental Policy, which promotes pollution prevention, regulatory compliance, and continuous improvement.

2.0 APPLICABILITY

This chapter is applicable to all civil servant and contractor employees assigned to GRC Lewis Field and Plum Brook Station, and to any NASA-controlled, Government-owned facilities associated with GRC at Lewis Field and Plum Brook Station.

3.0 BACKGROUND

The Hazard Communication Standard 29 Code of Federal Regulations (CFR) 1910.1200 requires Material Safety Data Sheets (MSDSs) with chemicals and a list of all potential chemical hazards in each area. When acquiring hazardous chemicals, an MSDS is required to purchasing the potential chemical hazard. The information is entered into the Chemical Management System to provide a list of potential chemical hazards in each area. This information is then used to generate the information needed for the Emergency Planning and Community Right-to-Know Act (EPCRA) for the Superfund Amendments and Reauthorization Act (SARA) 311 and 312 reports, as referenced in Chapter **13** of the Environmental Programs Manual (EPM). By reviewing the hazardous chemical acquisition, we are aware of the materials at GRC and can plan accordingly to address any incident.

4.0 POLICY

It is GRC policy to support our missions in an environmentally, economically, and fiscally sound, integrated, continuously improving, efficient, and sustainable manner. As part of the policy, procurement of hazardous chemicals shall assure the safe handling, receipt, control, and shipment of the hazardous chemicals in order to protect the requester, user, transporter, shipper, and the environment from any exposure to a hazardous chemical. Unless specifically stated otherwise in this document, acquisition of hazardous chemicals at GRC shall follow the recommendations of NASA Procedural Requirement (NPR) **1800.1** Chapter 4.7, Control of Hazardous Substances and Articles Acquisitions.

5.0 RESPONSIBILITIES

5.1 Initiator

- Ensures that all appropriate personal protective equipment (PPE) and apparel is available, enabling employees to work safely with the hazardous chemical and material.
- Ensures all safety and health requirements on the MSDS will be met (ref. NPR 1800.1 4.7.2.2.e)
- Reviews alternative chemicals and materials to determine if a less hazardous or more sustainable material can be used instead (ref NPR 1800.1 4.7.4.4.b)
- Purchases only the amount of hazardous chemical and material needed (ref NPR 1800.1 4. 7.4.4.b)

- Ensures that employees who will be using the hazardous chemical and material have been properly training in the safe use and potential emergency scenarios associated with it.
- Ensures that appropriate storage is available before the hazardous chemical and material is received.
- For hazardous chemicals or materials that are ozone depleting substances (ODSs), ensures that the appropriate waiver is completed and included as part of the technical package attached to the purchase request (PR) (EEMO), Chapter 16, Stratospheric Ozone Protection).
- For hazardous chemicals or materials that are Occupational Safety and Health Administration (OSHA)-regulated (see the List of Highly Hazardous Chemicals, Toxics and Reactives (Mandatory), OSHA 1910.119 Appendix A), contact the Safety, Health and Environmental Division (SHeD), industrial hygiene program lead to ensure that all regulatory requirements shall be met before the chemical is ordered.

5.2 Requestor

- Checks the availability from the Center's inventories, such as stock or CHEMEX, before requesting the purchase of hazardous chemicals and materials. Consider using chemicals that are available for use at the Center before purchasing new chemicals.
- Consults with safety, environmental, industrial hygiene, health, chemical management, and security specialists to ensure that the request contains necessary supporting information. This information may include safe handling and user guides, MSDSs, and special handling precautions as directed by SHeD. Obtains pre-approval for hazardous chemicals and materials from SHeD chemical management.
- For Government purchases, prepares a complete, legible, and accurate technical package if needed, in conjunction with the PR. Prepares a PR using the GRC SAP Integrated Enterprise Management Program (IEMP). For all hazardous chemical purchases, the requestor shall select "NASA Hazardous PR" from the drop-down PR selection box in the "Create Purchase Requisition" screen of the IEMP. This identifies the requisition as a hazardous chemical purchase and shall route the requisition through the appropriate PR release strategy. The appropriate chemical name (preferably by CAS registration number or IUPAC nomenclature) shall be used in the short, text-descriptive line.
- Bank cards are not to be used for any chemical or hazardous material purchase unless prior authorization is obtained or special authorization is requested due to a justified urgency. Specific instructions shall be provided and a note shall be included in the "comments" field of the order log in P-Card citing the approval.
- Purchases of specialty gases in cylinders (including banks) and non-bulk cryogenic liquids in dewars will order using the Specialty Gas Management System (SGMS). SGMS will automatically route the order to SHeD for pre-approval before purchases can be made for specialty gases in cylinders and non-bulk cryogenic liquids in dewars.
- For contractor procurements, the contractor prepares a complete, legible, and accurate contractor PR. A copy of all MSDSs for hazardous chemicals or materials purchased by contractors at Lewis Field and Plum Brook Station shall be sent to SHeD. For a detail of processes used for contractors, please review Appendix B.

5.3 SHeD

- Review for release all hazardous chemical and material NASA PRs and Bankcard orders, and evaluate the hazard potential of each hazardous chemical and material being purchased.
- Review all hazardous chemical and material MSDSs to ensure nothing unusual is required.
- Have the authority to deny acquisitions of hazardous chemicals and materials until potentially significant hazardous conditions are eliminated or controlled.
- Consult with the occupational and safety areas of SHeD, Environmental and Security when appropriate, to communicate information on hazardous chemicals and materials being ordered and coordinate any additional requirements needed to ensure the health and safety of the employees and property of GRC.
- Maintain the central MSDS files and post MSDSs on the Chemical Management System.

- Provide technical advice for the safe use, handling, storage, and disposal of hazardous chemicals and materials.
- Provide information on GRC affirmative procurement (AP) initiative and on environmentally preferable products (EPPs) with recommendations for alternative chemicals for purchase when feasible.
- Maintain the NASA GRC Chemical Management System that tracks all chemical inventories.
- Notify the appropriate organization of any unusual circumstances.
- In conjunction with the appropriate organizational or contractor management, assure the safe use, handling, storage, and disposal of hazardous chemicals and materials.
- Coordinate any difficult or unusual circumstances that may arise in the handling of hazardous chemicals and materials with all appropriate parties. Assist in the development of a hazard analysis of procedures if required.
- Review hazardous chemical use work areas to ensure that all appropriate safety procedures and PPE are in place to minimize employee and property risk and that the hazardous chemicals and materials can be used safely in the designated area. Document any findings in the Facility Safety Inspection Records at least annually, audit or review the audit of purchase records to ensure all hazardous material acquisitions are reviewed and approved by competent persons. A competent person is a person who has acquired through training, qualification, or experience, the knowledge and skills to identify hazardous substances/articles being requested for acquisition, and the ability to manage those purchased and brought on the Center. Ensure all health and safety requirements are properly implemented prior to acquisition by reviewing Safety permits, and following the procedures documented in the following chapters: GRC Occupational Health Programs Manual, Chapter **20**, Hazardous Communication (HazCom) Policy and HazCom Program, Chapter **21**, Hazard Assessment/Exposure Assessment Program; and Glenn Safety Manual, Chapter **33**, Job Hazard Analysis.

5.4 Procurement Division

- Reviews purchase requests for accuracy, justification, proper approvals, and executes contracts or purchase orders for acquisition of hazardous chemicals and materials. Designates on purchase orders that deliveries of hazardous chemicals and materials ordered through SAP shall be directed to the Chemical Control Facility at Lewis Field and the Shipping and Receiving (S&R) at Plum Brook Station for proper receiving inspection and bar coding for inventory tracking.

5.5 Logistics and Technical Information Division (at Plum Brook Station, SSC Shipping and Receiving (S&R) Personnel)

- Inspects all packages containing hazardous chemicals and materials for breakage or leakage and reports any leaking packages by calling 911 (from an internal phone at either Lewis Field or Plum Brook Station).
- Receives package against the purchase order.
- Sends MSDSs to the requestor and SHeD chemical management when received.
- Ensures that the packages of hazardous chemicals and materials are delivered safely to the requestor.
- Prepares the appropriate paperwork and hazardous material shipping documents to ship hazardous chemicals and materials that are to be returned to the supplier from Lewis Field. Responsible for proper packaging, labeling, and shipping of any hazardous chemical from Lewis Field.

Report any discrepancies or unusual shipping papers to SHeD Chemical Management.

5.6 Building Managers and Supervisors

- Maintain awareness of all potentially hazardous activities within their assigned facilities that require the safe use, handling, storage, and disposal of hazardous chemicals and materials and hazardous wastes.

6.0 REQUIREMENTS

Executive Order 13423 requires that the Center (a) reduce the quantity of toxic and hazardous chemicals and materials acquired, used or disposed, (b) increase diversion of solid waste as appropriate, and (c) maintain cost-effective waste prevention and recycling programs in its facilities. Also, Executive Order 13514 requires that the Center (e) promote pollution prevention and eliminate waste by (v) reducing and minimizing the quantity of toxic and hazardous chemicals and materials acquired, used, or disposed of; and (viii) increasing agency use of acceptable alternative chemicals and materials and processing in keeping with the agency's procurement policies. The acquisition of hazardous chemicals and materials can affect this requirement directly. Therefore, the GRC requirements for acquisition of hazardous chemicals and materials have been defined to accomplish the goals of the policy.

6.1 Purchasing Goals

Chemical Management System: Maintain updated MSDS for current revisions and an updated inventory to assist requestor in having the option of using available chemicals.

Procurement: Expand purchases of environmentally sound goods and services, including bio-based products as described in the objectives of EPM, Chapter 9, Green Procurement.

Pollution prevention: Reduce use of chemicals and toxic materials and purchase lower risk chemicals and toxic materials from top priority list.

Toxics: Reduce the purchase and use of hazardous and toxic chemicals.

6.1 - The SHeD verification procedure to ensure compliance with the requirements listed in this section shall be accomplished by reviewing all new hazardous chemical and material orders during pre-approval and then archiving such information.

6.2 Storage

Order only enough hazardous chemicals or materials to accommodate the project. The Chemical Control Facilities are not able to accommodate storage of materials. When ordering, ensure that the facility can safely store the amount of material ordered until the material is used.

6.2 - The SHeD verification procedure to ensure compliance with the requirements listed in this section shall be accomplished by reviewing the chemical storage areas during a Facility Safety Inspection.

6.3 Free Samples

A hazardous chemical arriving at the Center without notification or preparation creates unnecessary health, safety, and environmental hazards. Therefore, all chemical, whether purchased or provided at no cost from a supplier, shall have pre-approval through Chemical Management by completing a Hazardous Material Sample(s) Acquisition Form C-153.

6.3 - The SHeD verification procedure to ensure compliance with the requirements listed in this section shall be accomplished by reviewing and filing all Hazardous Material Samples(s) Acquisition C-Form C-153 forms.

6.4 Agency Exchange

Hazardous chemicals and materials can be received and shipped from other Centers or Agencies. If there is no cost associated with the exchange, all hazardous chemicals and materials shall have pre-approval through Chemical Management by completing a Hazardous Material Sample(s) Acquisition Form C-153.

6.4 - The SHeD verification procedure to ensure compliance with the requirements listed in this section shall be accomplished by reviewing and filing all shipping papers and e-mails received from other Centers or Agencies.

6.5 University Exchange/Visiting Faculty

It has been common practice for visiting college/university and high school faculty and students to freely exchange hazardous chemicals and materials from the university/school to the Center to do work. This practice has created a myriad of chemical management issues and health, safety, and environmental hazards and liabilities. All hazardous chemicals and materials shall have pre-approval through Chemical Management by completing a Hazardous Material Sample(s) Acquisition Form C-153, to allow the movement of material from the school to the Center.

6.5 - The SHeD verification procedure to ensure compliance with the requirements listed in this section shall be accomplished by reviewing and filing all shipping papers and e-mails received from visiting college/university and high school faculty and students.

6.6 Delivery

All hazardous chemicals and materials are delivered to the Chemical Control Facility at Lewis Field, and the S&R facility at Plum Brook Station. This requirement also applies to all hazardous chemicals and materials including free samples. Exceptions shall be approved by chemical management prior to the hazardous chemical arriving on the Center property. Prior to delivery, the hazardous chemicals and materials will be bar-coded. Violations of the delivery requirement will receive a findings report which will summarize the inventory discrepancies and describe best practices and opportunities for improvement. Repeated violations will result in a Corrective and Preventive Action Report (CPAR) issued.

6.6 - The SHeD verification procedure to ensure compliance with the requirements listed in this section shall be accomplished by reviewing all new chemical and hazardous material orders during pre-approval and then archiving such information.

7.0 RECORDS

Maintained in the IEMP:

- Purchase requests
- Purchase orders
- Specialty Gas Management System
- Chemical receiving

Maintained by SHeD:

- Material Safety Data Sheets
- Chemical inventory (at Plum Brook Station, SSC personnel)
- Facility inspection records
- Safety permits

8.0 REFERENCES

Document number	Document Name
GLM–QS–1700.1	NASA Glenn Safety Manual, Chapter **5**, Oxygen
GLM–QS–1700.1	NASA Glenn Safety Manual, Chapter **6**, Hydrogen
GLM–QS–1700.1	NASA Glenn Safety Manual, Chapter **15**, Personal Protective Equipment
GLM–QS–1800.1	NASA Glenn Occupational Health Programs Manual, Chapter **2**, Asbestos
GLM–QS–1800.1	NASA Glenn Occupational Health Programs Manual, Chapter **4**, Respiratory Protection Program
GLM–QS–1800.1	NASA Glenn Occupational Health Programs Manual, Chapter **5**, Lead

GLM–QS–1800.1	NASA Glenn Occupational Health Programs Manual, Chapter **6**, Elemental Mercury
GLM–QS–1800.1	NASA Occupational Health Programs Manual, Chapter **13**, Laser Safety Program
GLM–QS–1800.1	NASA Glenn Occupational Health Programs Manual, Chapter **19**, Synthetic Inorganic Fiber Program
GLM–QS–1800.1	NASA Glenn Occupational Health Programs Manual, Chapter **23**, Nanomaterials Health and Safety
GLM–QS–8500.1	NASA Glenn Environmental Programs Manual, Chapter **5**, Management of Hazardous Materials and Waste for Reuse, Recycling, or Disposal
GLM–QS–8500.1	NASA Glenn Environmental Programs Manual, Chapter **6**, Pollution Prevention and Sustainability Plan
GLM-QS-8500.1	NASA Glenn Environmental Programs Manual, Chapter **9**, Green Procurement
GLM–QS–8500.1	NASA Glenn Environmental Programs Manual, Chapter **13**, Emergency Planning and Community Right-to-Know
GLM–QS–1800.1	NASA Glenn Occupational Health Programs Manual, Chapter **20**, Hazard Communication Policy
GLM–QS–1800.1	NASA Glenn Occupational Health Programs Manual, HAZCOM Program
GLM–QS–1800.1	NASA Glenn Environmental Occupational Health Manual, Chapter **25**, Chemical Hygiene Policy
GLM–QS–1800.1	NASA Glenn Occupational Health Programs Manual, Chemical Hygiene Plan
GLM–QS–8500.1	NASA Glenn Environmental Programs Manual, Chapter **16**, Stratospheric Ozone Protection
Federal Standard 313A	Material Safety Data Sheets, Preparation and Submission of NSS 1740.7, Safety
Public Law 94–469	Toxic Substances Control, A Standard for Handlers of Hazardous Materials
Title 29 CFR 1910 Subpart Z	Toxic and Hazardous Substances Title 29 CFR 1910.1200, Hazard Communication
Title 29 CFR 1960	Basic Program Elements for Federal Occupational Safety and Health
Title 40 CFR 355	Emergency Planning and Notification
Title 40 CFR 370	Hazardous Chemical Reporting; Community Right-to-Know
Title 40 CFR 372	Toxic Chemical Release Reporting; Community Right-to-Know
Title 40 CFR 260–265	Protection of the Environment
Title 49 CFR 100–177	Hazardous Materials Regulations
Executive Order 13423	Strengthening Federal Environmental, Energy, and Transportation Management, January 26, 2007
Executive Order 13514	Federal Leadership in Environmental, Energy and Economic Performance, October 8, 2009
NPR 1800.1 Chapter 4.7	Control of Hazardous Substances and Articles Acquisitions

APPENDIX A.—DEFINITIONS AND ACRONYMS

Affirmative procurement (AP)

Code of Federal Regulations (CFR)

Corrective and Preventive Action Report (CPAR)

Emergency Planning and Community Right-to-Know Act (EPCRA)

Environmental Management System (EMS)

Environmentally preferable product (EPP)

Environmental Programs Manual (EPM)

Glenn Procedural Requirements (GLPR)

Glenn Research Center (GRC)

Hazardous chemical.—Any chemical that is a physical hazard or a health hazard.

Hazardous communication.—(HAZCom)

Health hazard.—A chemical for which there is statistically significant evidence based on at least one study conducted in accordance with established scientific principles that acute or chronic health effects may occur in exposed employees. The term "health hazard" includes chemicals which are carcinogens, toxic or highly toxic agents, reproductive toxins, irritants, corrosives, sensitizers, hepatotoxins, nephrotoxins, neurotoxins, agents which act on the hematopoietic system, and agents which damage the lungs, skin, eyes, or mucous membranes. Appendix A of the Hazard Communication Standard (29 CFR 1910.1200) provides further definitions and explanations of the scope of health hazards covered by this section, and Appendix B of the Hazardous Communication Standard describes the criteria to be used to determine whether or not a chemical is to be considered hazardous.

Integrated Enterprise Management Program (IEMP)

Material Safety Data Sheet (MSDS)

NASA Procedural Requirement (NPR)

Occupational Health and Safety Administration (OSHA)

Occupational Health Programs Manual (OHPM)

Ozone depleting substance (ODS)

Personal protective equipment (PPE)

Physical hazard.—A chemical for which there is scientifically valid evidence that it is a combustible liquid, a compressed gas, explosive, flammable, an organic peroxide, an oxidizer, pyrophoric, unstable (reactive), or water-reactive.

Purchase request (PR)

Safety and Mission Assurance Directorate (SMAD)

Safety and Health Division (SHeD)

Specialty Gas Management System (SGMS)

Superfund Amendments and Reauthorization Act (SARA)

Support service contractor (SSC)

Shipping and Receiving (S&R)

FIGURE B.1 - ROUTES TO OBTAIN CHEMICALS AT NASA Glenn Research Center

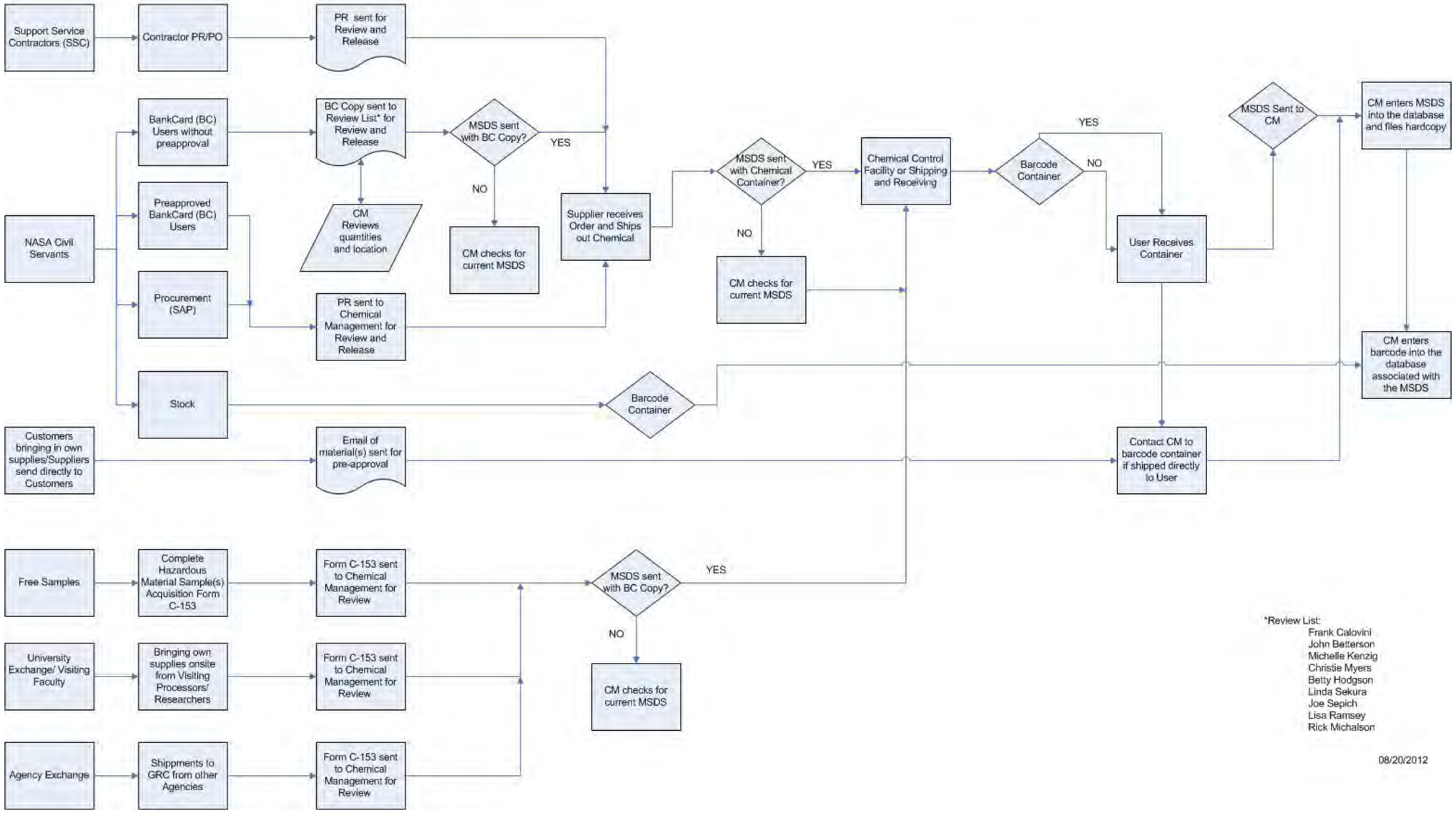

Contents

1.0 PURPOSE....2
2.0 APPLICABILITY....2
3.0 BACKGROUND....2
4.0 POLICY....2
5.0 RESPONSIBILITIES....2
5.1 Safety and Health Division (SHeD)....3
5.2 Program Lead....3
5.3 Ergonomics Assessment Team....3
5.4 Shall re-evaluate the ergonomic program periodically and identify deficiencies and correct. Ergonomic Assessment Staff (Resident Medical Services Contractor)....3
5.5 Employees....3
5.6 NASA Center directorate heads are responsible for ensuring that the NASA Occupational Health Program (OHP) be effectively implemented and operated at their respective Centers and component facilities....4
6.0 REQUIREMENTS....4
6.1 Employee Office Ergonomic Training....4
7.0 RECORDS....4
8.0 REFERENCES....4
APPENDIX A .—DEFINITIONS AND ACRONYMS....5

Chapter 15—ERGONOMICS

NOTE: *The current version of this chapter is maintained and approved by the Safety and Health Division (SHeD). The last revision date of this chapter was June 2012. The current version is located on the Glenn Research Center (GRC) intranet at http://smad-ext.grc.nasa.gov/shed/pub/ohpm/ohpm-manual.pdf. Approved by Chief of Safety and Health Division.*

1.0 PURPOSE

This chapter establishes the NASA GRC Ergonomics Program. The program emphasizes making efforts at the design stage of work processes to avoid risk factors that can lead to musculoskeletal disorders (MSD).

2.0 APPLICABILITY

This chapter applies to all personnel at NASA GRC and Plum Brook Station (PBS) and includes but is not limited to civil servants, contractors, tenants, and students.

3.0 BACKGROUND

Work-related MSD are among the most prevalent lost-time injuries and illnesses in nearly every industry. Those involving the back are among the most costly occupational health problems. Causes span diverse workplaces and job operations. The six key program elements that help to eliminate ergonomic injuries follow:

- Management leadership and employee involvement
- Ergonomic hazard identification and information programs
- Job hazard analysis and control
- Training programs
- Medical management of emerging injuries
- Program evaluation

The National Institute for Occupational Safety and Health (NIOSH), the Federal agency responsible for conducting research and making recommendations for the prevention of work-related disease and injury, is part of the Centers for Disease Control and Prevention (CDC).

NIOSH has developed the Work Practices Guide for manual lifting. Employees can use the guidelines to determine which risk factor cause problems and then can use a formula to find the recommended weight limit (RWL) for lifting so as to avoid injury. http://www.hazardcontrol.com/factsheets/pdfs/NIOSH-1981.pdf

Lifting tasks are a primary contributor to work-related MSD. Some of the many potential risk factors associated with lifts include excessive force, awkward postures, repetitiveness, and static loading.

4.0 POLICY

It is the policy of GRC to manage and conduct research and development operations in a manner that eliminates or minimizes all potential hazards and to avoid accidents involving injury to personnel, damage to property, or loss of research operation time and effectiveness. The ergonomics policy is designed to minimize work-related MSD by developing a proactive Ergonomics Program. GRC will provide the proper equipment, facilities, safety rules, and procedures necessary for implementing this program.

5.0 RESPONSIBILITIES

It is the responsibility of all civil servants, tenants, and support service contractors to use the equipment and facilities in a manner that will contribute to the effectiveness of the Ergonomics Program.

5.1 Safety and Health Division (SHeD)

- Shall provide guidance on the requirements of Federal, State, and local ergonomic regulations as well as standard ergonomic guidelines
- Shall maintain the Ergonomics Program
- Shall be responsible for all original Ergonomic Pre-assessment Surveys and NASA form C–19, Office Ergonomics Evaluation Checklist

5.2 Program Lead

- Shall provide guidance on the requirements of Federal, State, and local regulations and standard ergonomic guidelines
- Shall manage the Ergonomics Program

5.3 Ergonomics Assessment Team

- Shall be composed of members of SHeD
- Shall be familiar with Ergonomics Program requirements
- Shall utilize the program as it relates to the needs of employees
- Shall comply with requirements and ensure that employees comply
- Shall be trained to recognize, evaluate, and control ergonomic hazards that may be present at GRC and be trained in a recognized occupational ergonomics course or equivalent
- Shall perform assessments of employee workareas, based on requests
    - Shall identify ergonomic problems and concerns and notify the program lead for assistance with correcting them
    - Shall submit to the direct supervisor an ergonomic survey report containing all ergonomic components of the employee's environment
    - Shall conduct interviews and take anthropometric and workstation measurements
    - Shall analyze the results of assessments to determine if negative ergonomic conditions exist and to what degree and shall use the analysis to determine how to eliminate or minimize problems

5.4 Shall re-evaluate the ergonomic program periodically and identify deficiencies and correct. Ergonomic Assessment Staff (Resident Medical Services Contractor)

- Shall be trained to recognize, evaluate, and control ergonomic hazards
- Shall perform assessments of employee workareas by request
- Shall conduct interviews and perform anthropometric and workstation measurements
- Shall analyze the results and determine how to eliminate or minimize problems

5.5 Employees

- Shall complete required ergonomic office training in SATERN
- Shall know the signs and symptoms of MSD and notify their supervisors
- Shall practice good posture and develop work habits that will reduce ergonomic injury
- Shall notify their supervisors of ergonomic concerns
- Shall serve on a safety and occupational health committee that makes recommendations to correct ergonomic hazards

- Shall work with the Ergonomics Program to learn and use skills to identify and analyze jobs for ergonomic hazards and make recommendations to correct them
- Shall complete the ergonomics questionnaire PRIOR to formal evaluation

5.6 NASA Center directorate heads are responsible for ensuring that the NASA Occupational Health Program (OHP) be effectively implemented and operated at their respective Centers and component facilities

- Initiate the ergonomic assessment process (Appendix B).
- Contact Medical Services to request an ergonomic assessment of work area.
- Ensure that a Center survey is completed at a specific interval to collect data defining the strength of the ergonomic program.

6.0 REQUIREMENTS

6.1 Employee Office Ergonomic Training

- The following required office ergonomic training shall be completed by all employees who work in an office environment. Office Ergonomic Training (SATERN)
- ***Training will be a one-time requirement, and thereafter, a refresher every 3 years.***

6.0 Verification the Human Capital Development Division (HCDD) assigns the course and tracks for completion in the System for Administration, Training and Educational Resources for NASA (SATERN). All on-line training

7.0 RECORDS

Ergonomic records are maintained by the Medical Service contractor (building15, room 102) and consist of Ergonomic Pre-assessment Surveys and the Office Ergonomics Evaluation Checklist (NASA form C–19).

8.0 REFERENCES

Document number	Document name
NPD 1800.2B	NASA Occupational Health Program
NPD 1810.2B	NASA Occupational Medicine Program
NPR 1800.1	NASA Occupational Health Program Procedures
NIOSH – 1981	National Institute for Occupational Safety and Health

APPENDIX A.—DEFINITIONS AND ACRONYMS

Anthropometry.—The study of physical dimensions in people, including the measurement of human body characteristics, such as size, breadth, girth, and distance between anatomical points. Anthropometry also includes segment masses, the centers of gravity of body segments, and the ranges of joint motion, which are used in biomechanical analyses of work postures.

Centers for Disease Control and Prevention (CDC)

Ergonomics.—Ergonomics is an engineering discipline that addresses the effect work environments and tasks have on the worker. Ergonomics involves workstation setup and design, body posture, prevention of computer-related injuries, and more. Ergonomics education is often included in the physical therapy treatment for back and neck injury and for chronic pain management. It is also known as human factors and human factors engineering.

Human Capital Development Division (HCDD)
Lower back pain.—**LBP**

Musculoskeletal disorders (MSD).—Ergonomic injuries are often described by the term "musculoskeletal disorders," a term in scientific literature that refers to a group of injuries and illnesses that affect the musculoskeletal system. There is no single diagnosis for MSD. The determination of whether any particular MSD is work-related may require the use of different approaches tailored to specific workplace conditions and exposures. Broadly speaking, establishing the work relatedness of a specific case may include taking a careful history of the patient and the illness; conducting a thorough medical examination; and characterizing factors on and off the job that may have caused or contributed to the MSD.

National Institute for Occupational Safety and Health (NIOSH)

NASA Policy Directive (NPD)

Recommended weight limit (RWL).—The principal product of the revised NIOSH lifting equation. The RWL is defined for a specific set of task conditions as the weight of the load that nearly all healthy workers could perform over a substantial period of time (e.g., up to 8 hours) without an increased risk of developing lifting-related LBP. By healthy workers, we mean workers who are free of adverse health conditions that would increase their risk of musculoskeletal injury.

Static loading.—Static loading, or sustained exertions, are physical effort or body postures that are held and require muscle contraction for more than a short time. As muscles remain contracted, the blood flow to the muscles is reduced.

System for Administration Training, and Educational Resources for NASA (SATERN)

Contents

1.0 PURPOSE....2
2.0 APPLICABILITY....2
3.0 BACKGROUND....2
4.0 POLICY....2
5.0 RESPONSIBILITIES....2
5.1 Program Lead....2
5.2 SHeD Occupational Health Program Lead: Health Hazard Evaluations....2
5.3 Medical Services Nutritionist....3
5.4 Facilities Division....3
5.5 Provide vermin and pest control in accordance with Section 5.5.11Logistics and Technical Information Technical Information Division COTR and Janitorial....3
5.6 Food Service Personnel....3
5.6.1 Food Service Supervisor....4
5.6.2 Foodborne Disease Prevention Methods....5
5.6.3 Additional Foodborne Disease Prevention Methods....5
5.6.4 Equipment and Facility Design Features....5
5.6.5 Inspections....5
5.6.6 Storage Techniques....5
5.6.7 Time and Temperature Specifications....6
5.6.8 Vermin Control....6
5.6.9 Food Service Sanitation Education....6
6.0 REQUIREMENTS....6
7.0 RECORDS....7
8.0 REFERENCES....7
APPENDIX A .—DEFINITIONS AND ACRONYMS....9

Chapter 16—FOOD SERVICE SANITATION

NOTE: *The current version of this chapter is maintained and approved by the Safety and Health Division (SHeD). The last revision date of this chapter was June 2012. The current version is maintained on the Glenn Research Center intranet at http://smad-ext.grc.nasa.gov/shed/pub/ohpm/ohpm-manual.pdf. Approved by Chief of Safety and Health Division.*

1.0 PURPOSE

The purpose of this chapter is to outline the basic methods to prevent outbreaks of foodborne illnesses by assuring that all food served or vended at Glenn Research Center (GRC) is clean, wholesome, and free of pathogenic organisms and organic or inorganic toxins (including those of bacterial origin). This chapter applies to transporting, storing, preparing, serving, and vending. It is also equally applicable to all non-appropriated-fund Exchange Operations food activities at GRC. In general, the provisions and guidelines prescribed herein are consistent with those specified in the U.S. Department of Health and Human Services (HHS), Public Health Service (PHS) recommendations, and the Food and Drug Administration (FDA) Food Code, and applicable regulations of the state of Ohio.

2.0 APPLICABILITY

This manual is applicable to all entities engaged in the preparation of food for consumption by Center personnel and food served or prepared by the staff of the Lewis Little Folks (LLF) Daycare Center.

3.0 BACKGROUND

Food safety refers to the conditions and practices that preserve the quality of food to prevent contamination and foodborne illnesses.

A three-word definition of food sanitation is protection from contamination; thus, all functions and operations must be included in a food sanitation program. All food products must be protected from contamination before receiving and all the way) through to distribution. Sanitation is a dynamic and ongoing function and cannot be sporadic or practiced once a day or once a week. Therefore, the guiding principle should be that food sanitation is a way of life.

4.0 POLICY

It is the policy of GRC NASA Occupational Health Program to promote healthy behaviors by creating a work environment supportive of healthy choices. This goal is further accomplished by providing to the employees sound and safe nutrition services to assist with proper diet, meal planning, and weight and disease management.

5.0 RESPONSIBILITIES

5.1 Program Lead

The program lead shall ensure a continuing program of inspection and surveillance in all areas where food is stored, prepared, served, transported, vended, or consumed. Such inspections are to be performed according to the guidelines established by this chapter of the Occupational Health Programs Manual (OHPM) and the FDA Food Code.

5.2 SHeD Occupational Health Program Lead: Health Hazard Evaluations

Should the need arise for a health hazard evaluation of a foodborne illness or food related incident be determined, by the SHeD Occupational Health Program Lead will be contacted to coordinate this action with personnel from the

Centers for Disease Control and Prevention (CDC). The SHeD Occupational Health Program Lead will develop a health hazard evaluation process.

5.3 Medical Services Nutritionist

The Medical Services Nutritionist will conduct quarterly inspections of the cafeterias to ensure compliance with regulations concerning cleanliness of the facility and equipment and the proper storage and serving temperatures of food The Medical Services Nutritionist will also provide a copy of the inspection report to the COTR, Food Service Contractor, and Program Lead.

5.4 Facilities Division

The Facilities Division will provide program oversight and support for pesticides and vermin control.

- Ensure that food sanitation personnel, food inspection personnel, COTR, and SHeD Program Lead for food safety are included in the procurement of food establishment equipment and facility design reviews.
- Provide prompt notification to the Food Services Supervisor, Food Services COTR (or LLF Director), and SHeD Food Safety Program Lead of a situation that could contaminate food or prevent food from being held at safe temperatures, including water intrusion, water outages, steam outages, and power outages.
- Promptly respond to work orders for facility and equipment repairs that could impact food safety.

5.5 Provide vermin and pest control in accordance with Section 5.5.11Logistics and Technical Information Technical Information Division COTR and Janitorial

Ensure proper cleaning of the B.15 kitchen, serving area, and cafeteria

5.6 Food Service Personnel

Food service personnel shall adhere to the established practices of food service sanitation, storage, preparation, and display and serving of foods. Personnel who prepare, transport, store, and serve food shall ensure that all areas under their control meet or exceed the minimum acceptable requirements established by NASA GRC directives and applicable Federal and State regulations for the safe handling of food.

All food service personnel shall meet the medical examination requirements as prescribed by the NASA Occupational Health Program. (NPR 1800.1C/Appendix C)

When food service personnel become ill, proper precautions shall be taken to prevent contaminating food. If the illness or infection is severe, the employee shall be required to leave work. All open cuts, sores, or burns must be kept covered.

Food service personnel shall maintain high standards of personal hygiene and follow these guidelines:

- Wash hands after each bathroom use
- Keep hands clean and fingernails trimmed
- Keep uniforms and/or clothes clean and neat
- Keep hairstyles neat, trimmed, and appropriate for food service
- Keep beards and mustaches neat and trimmed
- Do not wear excessive jewelry, such as extra rings or dangling bracelets

- Keep hands away from face, mouth, and hair while in service or production areas and do not eat in these areas

- Cigarette smoking is not allowed in service or production areas and hands must be washed after each use of tobacco

- Always maintain proper food safety and sanitation procedures to avoid causing a foodborne illness, since not following these proper procedures can be harmful to our valued customers; food safety infractions will be appropriately disciplined.

5.6.1 Food Service Supervisor

Food service supervisor shall develop and implement a Hazard Analysis and Critical Control Point (HACCP) food safety plan unique to each facility, which includes a program of self-inspection and continuous improvement. It is essential that the unique conditions within each facility be considered during the development of the plan. A generic plan is not acceptable. The food safety plan shall identify potential hazards of significance and include preventative measures to ensure or improve food safety. Critical Control Points (CCP) shall be identified and preventative measures incorporated into recipes.

. Additionally, the contractor shall develop a written food safety policy that assigns responsibilities, accountability, and authority to all affected organizations, departments, and employees involved with food sanitation. The policy should be reviewed and updated annually and contain the following procedures:

- Health hazard evaluations

- Food safety inspections

- Procedures based on HACCP

- Corrective actions for unsatisfactory food safety inspections

- Training requirements

- Food safety and food sanitation procedures

- Employee medical examination requirements

- Monitoring requirements

- Recordkeeping requirements

- Corrective actions process

Food service supervisor shall ensure that the SHeD Occupational Program Lead & Food Service COTR be promptly notified in the event of an emergency, such as a fire, flood, power outage, or similar event that might result in the contamination of food.

Food service supervisor shall provide properly prepared facility plans to the program lead for review. These include proposed food service facilities, redesigned facilities, and facilities that intend to make significant changes to the existing menu or theme. Facility plans shall include menu plans and equipment specifications.

Food service supervisor shall provide training and maintain certification requirements for all food service employees as identified by the program lead.

Food service supervisor shall maintain the most recent copy of the GRC Food Sanitation Inspection Form and have it available for review by the program lead.

Food service supervisor shall ensure that proper food handling procedures be observed at all times. Each employee shall be responsible for compliance with all food sanitation requirements in his/her work area.

5.6.2 Foodborne Disease Prevention Methods

Food Service Supervisor will ensure that all food handlers report to the Medical Services complex (located in building 15) when any symptoms of infections and /or communicable disease are present.

Food handlers shall report any symptoms of infections and /or communicable diseases in a manner that allows the cafeteria manager or his/her designee to prevent the likelihood of foodborne disease transmission, including the following illnesses:

- Salmonella Typhi, Shigella, Escherichia Coli (E. coli 0157:H7) Hepatitis
- gastrointestinal illness, such as diarrhea, fever, vomiting, jaundice, or sore throat with fever
- A boil(s) or infected wound(s) containing pus or an open or draining wound on the hands or wrists or exposed portions of the arms

5.6.3 Additional Foodborne Disease Prevention Methods

In addition, illnesses of a similar nature, such as those described in **5.5.2**, occurring in the home of the food handler are significant. These illnesses shall be reported so that medical determination can be made as to the likelihood of transmission if the employee resides in the same household as a person who is diagnosed with a disease caused by S. Typhi, Shigella, E.Coli 0157:H7, or Hepatitis.

Food Service Supervisor will ensure that all food handlers who have been absent from work due to illnesses or conditions listed in the Ohio Administrative Code, chapter 3717–1, Ohio Uniform Food Safety Code, rule 3717–1–02.1, shall obtain medical clearance prior to returning to work.

5.6.4 Equipment and Facility Design Features

The design of a food establishment shall meet the requirements outlined in the FDA Food Code, unless they cannot be technically accomplished. The program lead shall approve the design deviation.

5.6.5 Inspections

The program lead or his or her designated representative shall perform periodic announced and unannounced inspections of all food service facilities to ensure compliance with applicable regulatory requirements. These inspections shall occur anytime during operational hours but shall not disrupt the selling of food. Where inspections indicate noncompliance with GRC approved procedures and controls, the responsible organization for that activity shall correct all discrepancies and notify the program lead through the inspecting official when remediation has been completed. The program lead shall verify inspections that use the GRC Food Sanitation Inspection Form. A SHED specialist shall verify the government designee's inspection report by audit. Audit reports shall be documented.

5.6.6 Storage Techniques

Foods left over from serving lines will not be frozen. They must be wrapped or containerized, labeled, dated, and refrigerated. Food not subject to further washing or cooking before serving shall be stored in a way that protects against cross-contamination from food requiring washing or cooking (e.g., store raw vegetables above raw meats). Separate different types of raw animal products by use of different containers, partitions, shelving, or other approved means.

5.6.7 Time and Temperature Specifications

The greatest factors in foodborne diseases is time and temperature abuse, causing organisms to grow and multiply rapidly between the temperatures of 41 and 135 °F (known as the time/temperature danger zone). Potentially hazardous high-protein foods that have been held (total time from receiving to serving) for 4 hours in the temperature danger zone are not safe for consumption. Foods that have fallen out of safe time/temperature holding parameters shall be immediately discarded. Foods that will soon be out of safe time/temperature holding parameters and cannot be safely reheated or cooled shall be immediately discarded.

5.6.8 Vermin Control

Effective control measures shall be taken to protect against vermin entry into the food establishment and the breeding or presence on the premises of rodents, flies, roaches, and other pests.

There shall be an ongoing insect control-spraying program using only SHeD-approved chemical pesticides that are applied by licensed personnel. This program will be monitored by SHeD on a periodic basis.

5.6.9 Food Service Sanitation Education

When possible and prior to employment, all food service personnel shall have received formal training in the principles and practices of food service sanitation. Employees who are already hired and have had formal training will possess certificates and will have attended a certificate-producing course such as ServSafe or the equivalent. New hires who have not attended a certificate-producing course will have 30 days to enroll in a class such as ServSafe or an equivalent; however, the employee will not perform any work in which he or she handles food until the class is taken and the employee is certified.

Managers who are responsible for the storage, preparation, display, and serving of foods to Center personnel shall demonstrate their knowledge of foodborne disease prevention, application of HACCP principles, and the FDA Food Code by being certified as a Food Protection Manager.

6.0 REQUIREMENTS

6.1 Food Service Sanitation Program (NPR 1800.1C)

The requirement for the establishment of a Food Service Sanitation Program is NPR 1800.1C, which states: “NASA shall mitigate potential food safety hazards by establishing a primary prevention approach to food safety that encompasses planning and reviews of all proposed projects, processes, and procedures to mitigate potential food safety hazards.”

6.1 – 6.3 The SHeD verification procedure to ensure compliance with the requirements listed in this section shall be a review of the written food safety policy, NPR 1800.1C

6.2 Hazard Analysis Critical Control Points (HACCP) (U.S. HHS and FDA Food Code)

An HACCP will be used to identify potential food safety hazards, so that key actions can be taken to reduce or eliminate the risk of the hazards being realized. The system is used at all stages of food production and preparation processes including packaging, distribution, etc. The HACCP will be updated as required to ensure continuous improvement.

6.1 – 6.3 The SHeD verification procedures to ensure compliance with the requirements listed in this section shall be the review of the HACCP procedures maintained by the Food Service Supervisor.

6.3 Food Inspections (U.S. HHS and U.S. FDA Food Code)

A quarterly inspection of the cafeteria will be done t to ensure compliance with the regulations concerning cleanliness of the facility and equipment. All food should be held at correct temperatures and free from cross-contamination during the flow of food: purchasing, receiving, storing, preparing, cooking, reheating, holding, and serving.

6.4 All bottled water dispensers shall be in compliance with Federal, state, and local regulations.

Only bottled water approved by the SHeD shall be placed in bottled water dispensers. Under no circumstances, shall empty bottles be refilled by anyone other than the processor.

All organizations procuring bottled water shall ensure that:

- No bottled water dispensers are allowed or bottles of water stored in areas where general hazards or contamination of any kind pose a threat to users under normal operations;
- Bottled water dispensers are maintained in a sanitary condition; and

All dispensers have equipment numbers.

6.1 – 6.4 The SHeD verification procedures to ensure compliance with the requirements listed in this section shall be to review the GRC Food Sanitation Inspection Form retained by the Food Service Supervisor.

7.0 RECORDS

- Employee training records (maintained by cafeteria supervisor)
- Quarterly inspections (maintained by medical services nutritionist)
- Physical examinations (dates only)(maintained by cafeteria supervisor)
- Inspection audits (maintained by program lead)

8.0 REFERENCES

Document number	Document name
NPD 1800.2B	NASA Occupational Health Program
NPD 1810.2B	NASA Occupational Medicine Program
NPR 1800.1C	NASA Occupational Health Program Procedures
	Centers for Disease Control and Prevention (CDC) Food Safety Office
	National Environmental Health Association Food Safety Education Resources
	USDA 2009 FDA Food Code
	U.S. Department of Agriculture (USDA)/FDA Center for Food Safety and Applied Nutrition

USDA/FDC (Federal Food, Drug and Cosmetic Act) Food-borne Illness Education

USDA Food Safety Inspection Service (FSIS)

USDA Managing Food Safety

APPENDIX A.—DEFINITIONS AND ACRONYMS

Centers for Disease Control and Prevention (CDC)

Escherichia Coli (E-coli).—*E. coli* O157:H7, one of hundreds of strains of the bacterium Escherichia coli, is an emerging cause of foodborne illness.

Hazard analysis and critical control point (HACCP)
HACCP is a management system in which food safety is addressed through the analysis and control of biological, chemical, and physical hazards from raw material production, procurement and handling, to manufacturing, distribution and consumption of the finished product

Hepatitis— inflammation of the liver and also refers to a group of viral infections that affect the liver.

There are five types of Hepatitis viruses.

A – The hepatitis A virus (HAV) can affect anyone. In the United States, hepatitis A can occur in situations ranging from isolated cases of disease to widespread epidemics.

B – The hepatitis B (HBV) is a serious disease caused by a virus that attacks the liver. The virus can cause lifelong infection, cirrhosis (scarring of the liver), cancer, liver failure, and death.

C – Hepatitis C (HCV) causes liver disease and is found in the blood of persons who have the disease. HCV is spread by contact with the blood of an infected person.

D – Hepatitis D (HDV) causes liver disease and requires the hepatitis B virus to exist. HDV is found in the blood of infected persons.

E – Hepatitis E (HEV) is a liver disease transmitted in much the same way as that of hepatitis A. However, hepatitis E does not occur often in the United States.

NASA Policy Directive (NPD)

Occupational Health Programs Manual (OHPM)

Salmonella.—Bacteria that cause a foodborne illness called salmonellosis. Symptoms include nausea, vomiting, abdominal cramps, diarrhea, fever, and headache. It is an important public health problem in the United States and several European countries.

Salmonella Typhi.—Salmonella Typhi is a human-specific pathogen causing the systemic febrile illness typhoid fever.

Shigella.— *Shigella* are bacteria that can infect the digestive tract and cause a wide range of symptoms, from diarrhea, cramping, vomiting, and nausea, to more serious complications and illnesses.

Time/temperature danger zone.—The zone between temperatures of 41 and 135 °F where organisms in food grow and multiply rapidly, causing diseases.

U.S. Department of Health and Human Services (HHS) is a Cabinet department of the United States government with the goal of protecting the health of all Americans and providing essential human services.

U.S. Food and Drug Administration (FDA) - is an agency of the United States Department of Health and Human Services, one of the United States federal executive departments. The FDA is responsible for protecting and promoting public health through the regulation and supervision of food safety, tobacco products, dietary supplements, prescription and over-the-counter pharmaceutical drugs (medications), vaccines, biopharmaceuticals, blood transfusions, medical devices, electromagnetic radiation emitting devices (ERED), veterinary products, and cosmetics

U.S. Public Health Service (PHS) - the primary division of the Department of Health, Education and Welfare (HEW)

Contents

1.0 PURPOSE....2
2.0 APPLICABILITY....2
3.0 BACKGROUND....2
4.0 POLICY....2
5.0 RESPONSIBILITIES....2
5.1 Federal Workers' Compensation Program Specialist....2
5.2 Office of Workers' Compensation Programs, U.S. Department of Labor....3
5.3 Medical Services Personnel....3
5.4 Health and Safety Personnel....3
5.5 Glenn Research Center Payroll Office....3
5.6 Employees....3
5.7 Supervisors....3
5.8 Office of Human Capital Management....4
5.9 Safety and Health Division Chief....4
6.0 REQUIREMENTS....4
7.0 RECORDS....4
8.0 REFERENCES....5
APPENDIX A .—DEFINITIONS AND ACRONYMS....6

Chapter 17—FEDERAL WORKERS' COMPENSATION PROGRAM

Note: *The current version of this chapter is maintained and approved by the Safety and Health Division (SHeD). The last revision date of this chapter was February 2012.*
The current version is located on the Glenn Research Center (GRC) intranet at http://smad-ext.grc.nasa.gov/shed/pub/ ohpm/ohpm-manual.pdf. Approved by Chief of Safety and Health Division.

1.0 PURPOSE

This chapter provides requirements for claiming compensation under the Federal Employees' Compensation Act (FECA) for on-the-job injuries or occupational illnesses incurred in the performance of duty. Through proactive and preventive efforts, the Federal Workers' Compensation Program Specialist (FWCPS) in the Safety, Health and Environmental Division (SHeD) will work with Center management, safety officials, the onsite Medical Services office, and the Office of Human Capital Management (OHCM) to reduce workplace injuries and illnesses and workers' compensation costs.

2.0 APPLICABILITY

This chapter is applicable to all Federal civil service employees at NASA Glenn Research Center (GRC) at Lewis Field and Plum Brook Station.

3.0 BACKGROUND

In 1908, the President signed legislation to provide workers' compensation for certain Federal employees in unusually hazardous jobs. The scope of the law was very restricted and its benefits were quite limited. However, it was the first workers' compensation law to pass the constitutionality test of the United States Supreme Court. The FECA, enacted in 1916, superseded the 1908 statute and is a workers' compensation law for all civilian Federal employees. It provides for wage loss compensation, medical care, and associated benefits for work-related injuries and illnesses. In 1950, the U.S. Department of Labor (DOL) assumed administrative responsibility for FECA. FECA is now administered by the Office of Workers' Compensation Programs (OWCP), in the DOL.

4.0 POLICY

It is GRC's policy under NASA Policy Requirement (NPR) 1800.1C, and NASA Policy Directive (NPD) 1800.2B, the FECA, and 20 Code of Federal Regulations (CFR) Part 10, to ensure that NASA employees receive prompt medical attention and full assistance in claiming compensation for injuries or occupational illnesses incurred in the performance of duty, and employees are entitled to a safe and healthful work environment that complies with the Occupational Safety and Health Administration (OSHA) safety and health regulations.

5.0 RESPONSIBILITIES

5.1 Federal Workers' Compensation Program Specialist

The Federal Workers' Compensation Program Specialist shall:

- Counsel and assist injured employees and supervisors on their responsibilities and the technical requirements of FECA laws and regulations.
- Maintain records of employee workers' compensation claims for GRC.
- Complete and submit appropriate injury forms to the DOL within regulatory timeframes and assisting injured employees and supervisors with completion of the forms.
- Coordinate with safety officials and employees in determining the causes of accidents and illnesses and assisting with eliminating the causes.
- Coordinate safety, injury, and first-aid data with safety officials to facilitate the prompt investigation of mishaps and completing the subsequent mishap reporting.
- Monitor claims and medical evidence provided by employees and working with Center management and the DOL to prevent fraud in the workers' compensation program.

- Track compensation and COP costs for all active GRC workers' compensation cases.
- Submit quarterly OWCP reports, all appropriate NASA injury and illness forms, and other claims reports as requested by the Agency Workers' Compensation Manager.
- Assist supervisors in providing injured employees with alternative work assignments and developing light-duty or restricted-duty assignments, as applicable, for partially disabled employees.
- Ensure that medical information is current and complete in all aspects of injury compensation case management.
- Maintain contact with the DOL, Center management, and injured employees to ensure optimum effectiveness in the administration of the workers' compensation program.

5.2 Office of Workers' Compensation Programs, U.S. Department of Labor

The Office of Workers' Compensation Programs, U.S. Department of Labor administers FECA within their respective geographic boundaries, providing operational guidance, advice, and assistance concerning injury compensation matters to 12 OWCP district offices located throughout the United States.

5.3 Medical Services Personnel

The Medical Services Personnel shall provide emergency first-aid care for job-related injuries and illnesses and for input on the NASA Incident Reporting Information System (IRIS).

5.4 Health and Safety Personnel

The Health and Safety Personnel shall investigate workplace conditions responsible for compensable injuries and illnesses, assisting the FWCPS with supporting and controverting claims, and in overseeing viable corrective actions of hazards.

5.5 Glenn Research Center Payroll Office

The Glenn Research Center Payroll Office shall, in coordination with the FWCPS, verify that continuation of pay (COP) does not exceed the 45-calendar-day limit, and furnishing COP usage information for the Center's quarterly reports.

5.6 Employees

Employees shall:

- Promptly and accurately report all job-related injuries and illnesses to their supervisors and seek immediate first aid, as necessary, at the Medical Services office.
- Submit all the necessary forms and medical documentation to the FWCPS as soon as possible.
- Obtain prior authorization from the FWCPS for private medical care.
- Accept light-duty or restricted-duty assignments during periods of partial disability.
- Return to regular duty as soon as medically feasible.

5.7 Supervisors

Supervisors shall:

- Ensure that employees injured on the job receive appropriate first aid.
- Promptly complete injury and/or illness compensation forms and forward them to the GRC Workers' Compensation Office.
- Ensure that employees are free from recognized hazards that are causing or are likely to cause death or serious physical harm.
- Comply with the occupational safety and health standards applicable to NASA and with all rules, regulations, and orders issued by the head of the Agency with respect to the NASA Occupational Safety and Health Program.

- Identify hazardous conditions and/or root causes associated with an injury, illness, or death, and coordinate with safety officials to institute positive measures to eradicate those causes by implementing viable corrective actions.
- Coordinate time and attendance reports for injured employees with the FWCPS.
- Record on-the-job injury and illness information in IRIS.
- Complete and submit to OHCM a leave without pay (LWOP) SF–52, Request for Personnel Action (when applicable), if his/her injured employee is placed in a LWOP status, and a return to duty (RTD) SF–52 when the employee is scheduled to RTD.
- Maintain continuous contact with his/her injured employee as the disability warrants.
- In conjunction with the FWCPS and OHCM, identify light-duty positions and modified job descriptions for employees who are eligible to return to work on a limited basis.

5.8 Office of Human Capital Management

The Office of Human Capital Management shall:

- Counsel and assist injured employees and supervisors on their responsibilities concerning benefits provided under FECA.
- Counsel long-term (beyond one year) disability employees on health and life insurance benefits, Thrift Savings Plan (TSP), and retirement as it relates to workers' compensation programs for the election of an annuity or workers' compensation.
- In conjunction with supervisors, ensure that FECA benefits and claims processing information to identify light-duty assignments and modified job descriptions for partially disabled employees is included in all OHCM supervisors training.
- Process the LWOP paperwork of a long-term disabled employee, and the RTD paperwork of an employee who recovers from a long-term disability, to their previous or equivalent position.

5.9 Safety, Health and Environmental Division Chief

The Safety, Health and Environmental Division Chief shall ensure that the establishment and coordination of an overall GRC Federal Workers' Compensation Program is effectively administered in collaboration with the Center's contractor Medical Director, the FWCPS, and OHCM. In addition, approve workers' compensation program standards, guidelines, and procedures.

6.0 REQUIREMENTS

To qualify for workers' compensation benefits, the employee or employee's survivors must establish that the cause of injury, illness, or death was sustained while in the performance of duty. The Form CA-1 (**Federal Employee's Notice of Traumatic Injury and Claim for Continuation of Pay/Compensation**) provides official notice to OWCP that an on-the-job injury has occurred; the form CA-2 (**Notice of Occupational Disease and Claim for Compensation**) provides official notice to OWCP that an occupational illness or disease has occurred; the Form CA-5 (**Claim for Compensation by Widow, Widower, and/or Children)** provides official notice to OWCP that a death has occurred, due to a job-related injury or illness.

All aspects of the GRC Workers Compensation Program are required to ensure compliance as indicated in policies: 5 U.S.C. Chapter 81, 20 CFR Chapter I - Parts 1-199, NPD 1800.2C, and NPR 1800.1C. These policies define more specific guidance, and govern the GRC Workers Compensation Program.

7.0 RECORDS

- Official Workers' Compensation Case File.—Maintained by the U.S. Department of Labor.
- Agency Workers' Compensation Case File.—Maintained by the NASA Workers' Compensation Office.
- Medical records file.—Maintained by the Medical Services office.

- NASA Incident Reporting Information System (IRIS).—Maintained by supervisors and Occupational Medicine Services.
- Mishap reports.—Maintained by SHeD.
- Exposure records.—Maintained by SHeD.
- Safety/OSHA long-term records.—Maintained by SHeD.

8.0 REFERENCES

Document Number	Document Name
5 CFR Part 339	Office of Personnel Management, Medical Qualification Determinations
5 U.S.C. Chapter 81	United States Code Title 5, Compensation for Work Injuries
20 CFR Chapter I, Parts 1–199	United Stated Department of Labor, Office of Workers' Compensation Programs, Department of Labor
29 CFR Part 1960	Occupational Safety and Health Administration, Basic Program Elements for Federal Employee Occupational Safety and Health Programs and Related Matters
GLM–QS–1700.1	NASA Glenn Safety Manual, Chapter **21**, Mishap and Close Call Reporting, Investigating and Recordkeeping
NPD 1800.2C	NASA Occupational Health Program (Revalidated 07/26/10)
NPR 1800.1C	NASA Occupational Health Program Procedures w/Change 1 (12/31/09)
NPR 8715.1	NASA Occupational Safety and Health Programs w/Change 3 (02/13/06)

APPENDIX A.—DEFINITIONS AND ACRONYMS

Code of Federal Regulations (CFR)

Continuation of pay (COP)

Department of Labor (DOL)

Federal Employees' Compensation Act (FECA)

Federal Workers' Compensation Program Specialist (FWCPS)

Glenn Research Center (GRC)

Incident Reporting Information System (IRIS)

Leave without pay (LWOP)

NASA Policy Directive (NPD)

NASA Policy Requirement (NPR)

Office of Human Capital Management (OHCM)

Occupational Safety and Health Administration (OSHA)

Office of Workers' Compensation Programs (OWCP)

Return to duty (RTD)

Safety and Health Division (SHeD)

Safety and Mission Assurance Directorate (SMAD)

Thrift Savings Plan (TSP)

United States Code (U.S.C.)

Contents

1.0 PURPOSE....2
2.0 APPLICABILITY....2
3.0 BACKGROUND....2
4.0 POLICY....2
5.0 RESPONSIBILITIES....2
5.1 Automated External Defibrillator (AED) Program Lead....2
5.2 Medical Director, Occupational Medicine Services....3
5.3 Chief of Safety and Health Division (SHeD)....3
5.4 Office of Protective Services (PSO)....3
5.5 Supervisors....3
5.6 Employees Serving as Automated External Defibrillator (AED) Responders....3
5.7 Automated External Defibrillator (AED) Program Response Teams....3
6.0 REQUIREMENTS....4
6.1 Training Requirements for Trained Automated External Defibrillator (AED) Responders (*NPR 1800.1C*)....4
6.2 Location of Automated External Defibrillators (AEDs) (*NPR 1800.1C*)....4
6.3 Maintenance of Automated External Defibrillators (AEDs) (*NPR 1800.1C*)....4
6.3.1 Periodic....4
6.3.2 Post-incident....4
6.4 Listing of Automated External Defibrillator (AED) Locations (*NPR 1800.1C*)....5
6.5 Procurement and Installation of Automated External Defibrillators (AEDs) (*NPR 1800.1C*)....5
6.5.1 Glenn Research Center....5
6.5.2 Plum Brook Station....5
6.5.3 Mobile Use....5
7.0 RECORDS....5
7.1 Automated External Defibrillator (AED) Responders....5
7.2 Maintenance and Performance (Malfunctioning and Other Abnormalities) Records for Automated External Defibrillators (AEDs)....5
7.3 Incident Response Reports (When Automated External Defibrillator (AED) Involved)....5
8.0 REFERENCES....6
APPENDIX A.—DEFINITIONS AND ACRONYMS....7

Chapter 18—AUTOMATED EXTERNAL DEFIBRILLATOR (AED) PROGRAM

NOTE: *The current version of this chapter is maintained and approved by the Safety and Health Division (SHeD). The last revision date of this chapter was August 2012. The current version is located on the Glenn Research Center (GRC) intranet at http://smad-ext.grc.nasa.gov/shed/pub/ohpm/ohpm-manual.pdf Approved by Chief of Safety and Health Division.*

1.0 PURPOSE

The purpose of this chapter is to establish the guidelines by which Glenn Research Center (GRC) shall establish an Automated External Defibrillator (AED) Program. The Office of the Chief, Health and Medical Officer (OCHMO) advocates the use of AEDs in conjunction with cardiopulmonary resuscitation (CPR) and rapid entry into the community emergency medical system (EMS) at all NASA Centers and facilities. The development and implementation of a Centerwide AED Program is a requirement for each NASA Center and facility.

2.0 APPLICABILITY

This chapter establishes procedures and practices for those personnel at Lewis Field and PBS as it applies to the use of AEDs. The Federal requirements for AEDs were established by the Food and Drug Administration (FDA), and The American Heart Association (AHA) established the guidance for the Public Access Defibrillator (PAD) Program in compliance with Federal regulations. The Department of Health and Human Services (HHS) and the General Services Administration (GSA) developed "Guidelines for Public Access Defibrillator Programs in Federal Facilities," published in the Federal Register on May 23, 2001.

3.0 BACKGROUND

Coronary heart disease is the leading cause of death in the United States, and the AHA estimates that 250 000 Americans die each year from sudden cardiac arrest as a result of this disease. The Safety and Health Division (SHeD) supports the use of automatic external defibrillators (AEDs) at GRC to provide a timely response to victims of sudden cardiac arrest caused by ventricular fibrillation. Ventricular fibrillation is a treatable condition and is potentially survivable when immediate treatment is provided. The purpose and goal of this program are to provide a timely emergency response and treatment for sudden cardiac arrest while ensuring the rapid transfer of the individual into the community EMS. The ability to respond quickly not only increases the potential survival for the individual but it also provides the opportunity for the best possible medical outcome.

4.0 POLICY

SHeD shall adhere to the AED requirements issued by NASA Headquarters. This adherence requires that an AED Program be established at each Center. Thanks to advances in AED technology, the lifesaving shock can now be safely and effectively administered by nonmedical individuals, greatly increasing the victim's chances of survival. SHeD has invested in a program that will make AEDs readily accessible in our workplace.

5.0 RESPONSIBILITIES

5.1 Automated External Defibrillator (AED) Program Lead

The Chief of SHeD shall designate the program lead to coordinate activities and provide operational oversight of the program and to ensure that routine AED checks occur. The AED Program lead shall also coordinate program activities with the contracting officer technical representative (COTR) of the contractor security force who resides in another organization. These duties include, but are not limited to, the following:

- Maintaining equipment according to the manufacturer's recommendations (except in GRC Medical Services and the Fitness Center)
- Maintaining adequate inventory of supplies and developing a process to ensure that proper levels of supplies be available at all times
- Creating and maintaining a list of AED responders who are up to date in training requirements

- Participating in training programs, drills, and post-incident briefings
- Maintaining current training records as part of the Center's Business Management System (BMS) process
- Ensuring that appropriate written documentation be completed after an incident
- Maintaining a record of equipment malfunction incidents
- Maintaining a data base to track all equipment and maintenance of AEDs
- Maintaining a data base of all employees who have been trained in the use of AEDs and updating the data base on an as-needed basis

5.2 Medical Director, Occupational Medicine Services

The Center medical director of the Occupational Medicine Services shall function in keeping with the statement of work for the Medical Services contract.

Program responsibilities include the following and shall be adhered to:

- Reviewing the AED policy on a regular basis and making recommendations to reflect programmatic changes
- Ensuring compliance with the program's processes and protocols
- Providing verbal notification to the AED Program lead following AED usage for emergency response
- Providing written followup notification, including case outcome, to the AED Program lead regarding AED usage

5.3 Chief of Safety and Health Division (SHeD)

The Chief of SHeD shall assign a member of SHeD to perform monthly documented maintenance checks on all AEDs at Lewis Field not assigned to other organizations. A similar arrangement shall be made for the AEDs assigned to be located at PBS.

5.4 Office of Protective Services (PSO)

The Chief of PSO shall ensure that monthly documented maintenance checks of the AEDs located in the security vehicles at GRC be performed. This policy also applies to the AEDs contained in the mobile units of Plant Protection at PBS.

Notify Medical Services and SHeD when an AED had been put into use.

5.5 Supervisors

The supervisors at GRC and PBS shall

- Support the implementation of the AED policy at their respective locations
- Support employees who are involved in the AED Program
- Report equipment malfunctions to the AED Program lead

5.6 Employees Serving as Automated External Defibrillator (AED) Responders

The employees at Lewis Field and PBS shall participate in all required training as required in this policy.

5.7 Automated External Defibrillator (AED) Program Response Teams

- AED Program response team members are responsible for completing the designated training, participating in drills, and following the established processes and protocols.
- Personnel recommended as team members to support the AED Program are physicians, nurses, Fitness Center staff, and emergency medical technicians.

6.0 REQUIREMENTS

6.1 Training Requirements for Trained Automated External Defibrillator (AED) Responders (*NPR 1800.1C*)

- All trained AED responders are required to successfully complete AED and Basic Life Support or CPR training. The two recommended training courses are offered through the AHA and the American Red Cross.
- The AHA offers both Heartsaver AED and Basic Life Support courses. Certification through the AHA is valid for 2 years.
- The American Red Cross offers a CPR/AED course. Certification through the Red Cross is valid for 1 year.
- Team members shall maintain their certification at the intervals required by the AHA or the American Red Cross. When State training requirements differ from NASA recommendations, the more stringent requirements will apply.
- This is a voluntary assignment and is open to government and support service contractor personnel.
- Online drills are conducted to provide AED Program response teams and trained AED responders with practice using the established emergency procedures and response evaluations.

6.1 SATERN records can be reviewed to verify training.

6.2 Location of Automated External Defibrillators (AEDs) (*NPR 1800.1C*)

- AEDs shall be located or utilized in areas with high population density and in work areas with a potential risk of sudden cardiac death.
- The AEDs shall be placed in a readily accessible and secure location.
- The written AED process and protocols and the operator's manual and supplies shall be placed with the AED unit.

6.2 Verification: Field inspections

6.3 Maintenance of Automated External Defibrillators (AEDs) (*NPR 1800.1C*)

6.3.1 Periodic

- Monthly performance and logistics checks are performed on authorized AEDs throughout the Center. The AED supplier alerts the SHeD specialist performing monthly inspections as to when they are due.
- The goal of these inspections is to ensure that the AED batteries are functioning properly, that the AED pads and batteries match the expiration date contained in the data base, and that cabinet alarms, as appropriate, are functioning as intended.
- The SHeD specialist performing the AED monthly checks shall update the online AED maintenance data base managed by the AED supplier. As a result of this inspection, any expired AED equipment, such as AED pads or batteries, shall be ordered through the AED supplier.

6.3.2 Post-incident

- After every emergency response, equipment shall be replaced to its designated location, supplies restocked, and a written checklist completed. The AED supplier's maintenance data base will be updated and suppliers ordered as required.
- The medical director must be notified immediately if there are any issues associated with the proper operation of the authorized AEDs at the Center.

6.3 Verification Review of maintenance documents.

6.4 Listing of Automated External Defibrillator (AED) Locations (*NPR 1800.1C*)

The actual AED locations are not contained within this document but can be found at the following Web site: http://smad-ext.grc.nasa.gov/shed/qsh.shtml

6.5 Procurement and Installation of Automated External Defibrillators (AEDs) (*NPR 1800.1C*)

6.5.1 Glenn Research Center

Any organization that desires to purchase an AED for installation at GRC using organizational funds must first contact the AED Program lead to initiate the purchasing process. The organization shall factor in the costs of purchasing an AED cabinet, of installing the cabinet, and of hardwiring the cabinet so that when accessed an audible alarm is annunciated at emergency dispatch.

6.5.2 Plum Brook Station

Any organization that desires to purchase an AED for installation at PBS using organizational funds shall first contact the AED Program lead to initiate the purchasing process. The organization shall also factor in the cost of purchasing an AED cabinet. The AED cabinets at PBS will be locally alarmed and when accessed will provide an audible alarm that will alert building occupants that an AED cabinet has been accessed.

6.5.3 Mobile Use

Any organization that resides at GRC or PBS and desires to purchase an AED for mobile use, such as in a Plant Protection or in a security force vehicle, shall contact the AED Program lead to initiate the purchase.

7.0 RECORDS

All records related to this program shall be maintained by the program lead in accordance with BMS requirements.

The Medical Services contractor shall maintain written records of training for AED Program response team members and drills that are conducted. All documentation on training and drills shall be retained for 5 years.

- Organizational Development and Training Office (civil service personnel)
- Employee's management (contractor personnel)

7.1 Automated External Defibrillator (AED) Responders

- Training of AED responders is tracked and recorded in the Agency online data base, System for Administration, Training, and Education Resources for NASA (SATERN).

7.2 Maintenance and Performance (Malfunctioning and Other Abnormalities) Records for Automated External Defibrillators (AEDs)

- SHeD: Maintenance and performance records are retained for 5 years.

7.3 Incident Response Reports (When Automated External Defibrillator (AED) Involved)

- Written documentation shall be completed immediately following each response involving the use of the AED.
- The GRC medical director shall be notified verbally immediately following an incident and should receive the written documentation prior to the close of business on the day of the incident, but no later than the beginning of the next business day.
- The GRC medical director shall retain the original written response and send a copy to the Chief of SHeD.
- The GRC medical director is also responsible for verbally notifying the AED Program lead regarding AED usage for emergency response and then forwarding all written documentation, including case outcome, to the program lead within one business day of the incident.
- Documentation of emergency responses must be retained indefinitely.

8.0 REFERENCES

Document number	Document name
NPD 1800.2A	NASA Occupational Health Program
NPD 1820.1	NASA Environmental Health Program
NPR 8621.1	NASA Procedural Requirements for Mishap Reporting, Investigating, and Recordkeeping
NPD 8700.1	NASA Policy for Safety and Mission Success
NPD 8710.1	Emergency Preparedness Program
NPR 1800.1	NASA Occupational Health Program Procedures
NPR 8715.1	NASA Safety and Health Handbook Occupational Safety and Health Programs
NPR 8715.3	NASA Safety Manual
ORC 5101.02	Authority of Director of Job and Family Services
ORC 2305.23	Liability for Emergency Care
	Medtronic Lifepak CPR Plus Manual, Medtronic Emergency Response Systems
	American Red Cross First Aid/CPR/AED Program Training Guide
	Federal Cardiac Arrest Survival Act (CASA)

APPENDIX A.—DEFINITIONS AND ACRONYMS

American Heart Association (AHA)

Automated external defibrillator (AED).—A device used to assist in the attempt to save the life of someone in sudden cardiac arrest

Business management system (BMS)

Cardiac Arrest Survival Act (CASA)

Cardiopulmonary resuscitation (CPR).—Life-saving procedure consisting of mouth-to-mouth respiration and chest compression. CPR allows oxygenated blood to circulate to vital organs, such as the brain and heart. CPR can keep a person alive in the short term until more advanced procedures (such as defibrillation) can be initiated.

Contracting officer's technical representative (COTR)

Department of Health and Human Services (HHS)

Emergency medical system (EMS)

Food and Drug Administration (FDA)

General Services Administration (GSA)

Glenn Research Center (GRC)

NASA Policy Directive (NPD)

NASA Procedural Requirements (NPR)

Office of the Chief, Health and Medical Officer (OCHMO)

Office of Protective Services (PSO)

Ohio Revised Code (ORC)

Plum Brook Station (PBS)

Public access defibrillator (PAD)

Safety and Health Division (SHeD)

System for Administration, Training, and Education Resources for NASA (SATERN)

Contents

1.0 PURPOSE 2
2.0 APPLICABILITY 2
3.0 BACKGROUND 2
4.0 POLICY 2
5.0 RESPONSIBILITIES 2
5.1 Operations Team and Plum Brook Station Team 2
5.2 Facilities Division 3
5.3 Supervisors 3
5.4 Employees 3
5.5 Medical Director, Occupational Medicine Services 4
5.6 Human Capital Development Branch Chief 4
6.0 REQUIREMENTS 4
6.1 Notification of Use of SIFs (*NASA NPR 1800.1, Section 4.7.1*) 4
6.2 Hazard Assessment (*NASA NPR 1800.1, Sections 4.2 and 4.7.1; 29CFR1910.132*) 4
6.3 Exposure Assessment (*NASA NPR 1800.1, Sections 4.2 and 4.7.1; ACGIH 2009 TLVs*) 4
6.3.1 Air Monitoring 4
6.3.2 Sampling Methodology 5
6.3.3 Occupational Exposure Limits (*NASA NPR 1800.1 Section 4.2; ACGIH 2009 TLVs*) 5
6.4 Safe Work Practices 5
6.4.1 General Requirements 5
6.4.2 Work Areas 5
6.5 Engineering Controls (*NASA NPR 1800.1, Section 4.43.2; 29CFR1910.1000(e)*) 5
6.6 Personal Protective Equipment (*NASA NPR 1800.1 Section 4.43.2; 29CFR1910 Subpart I*) 6
6.6.1 Mineral Wool and Rock and Glass Wool PPE Requirements 6
6.6.2 RCF PPE Requirements 6
6.7 Training (*29CFR1910.1200*) 6
6.7.1 Hazard Communication Training 6
6.7.2 Specific Hazard Training 6
6.8 Medical Surveillance *(NASA NPR 1800.1)* 6
6.9 Construction Use of SIFs 7
6.10 Disposal 7
6.11 Recordkeeping *(29 CFR 1910.1020)* 7
7.0 RECORDS 7
8.0 REFERENCES 7
APPENDIX A.—DEFINITIONS AND ACRONYMS 9

List of Tables

TABLE 6.1.—GLENN OCCUPATIONAL EXPOSURE LIMITS AND ACTION LEVELS 5

Chapter 19—Synthetic Inorganic Fibers

Note: *The current version of this chapter is maintained and approved by the Safety and Health Division (SHeD). The last revision date of this chapter was May 2012. The current version is located on the Glenn Research Center intranet at http://smad-ext.grc.nasa.gov/shed/pub/ohpm/ohpm-manual.pdf. Approved by Chief of Safety and Health Division.*

1.0 PURPOSE

This chapter describes the Glenn Research Center (GRC) Synthetic Inorganic Fiber (SIF) Program and establishes minimum requirements to reduce the risk of occupational illness resulting from exposure to synthetic fibers. To provide an environment free from excess fibers, priority will be given to the use of engineering controls such as local exhaust ventilation for employees working with synthetic fibers.

2.0 APPLICABILITY

This chapter is applicable to all civil servant and support service contractor (SSC) employees assigned to GRC sites, construction contractors, students, and visitors.

SSCs and construction contractors are responsible for the health and safety of their employees and for hazard analyses, training, personal protective equipment (PPE), medical surveillance, and other requirements to ensure compliance with NASA policy.

3.0 BACKGROUND

SIFs, which include fiberglass, rock and slag wool, and refractory ceramic fibers (RCFs), have been under review by the scientific community to determine health effects of these fibers. The International Agency for Research on Cancer (IARC) states that fiberglass and mineral and rock wool materials show "no evidence of increased risks of lung cancer or of mesothelioma from occupational exposures during manufacture of these materials, and inadequate evidence overall of any cancer risk." The IARC has classified RCF as "possibly carcinogenic to humans." Animal toxicology studies of RCFs have indicated the development of lung cancers and mesothelioma, a rare cancer of the pleura. For this reason, the GRC occupational exposure limit (OEL) for RCF has been set to a lower level than either fiberglass or mineral wool. In addition, RCFs exposed to temperatures above 1800 °F form crystalline silica, a suspect human carcinogen. SIFs are available in various forms, including loose fill bulk insulation, blanket insulation, paper-type wrap insulation, and compressed products such as gaskets.

4.0 POLICY

GRC's policy is to comply with all applicable regulations regarding SIF use and to prevent illness to workers and damage to the environment from their use, removal, and disposal. To accomplish this, all personnel shall comply with the requirements of this chapter.

It is also NASA's policy to adhere to Occupational Safety and Health Administration (OSHA) or the American Conference of Governmental Industrial Hygienists (ACGIH) OELs (whichever are more restrictive) to ensure worker protection. GRC has adopted recommended exposure limits for work with synthetic fibers. See Table **6.1** in Section **6.3.3**.

5.0 RESPONSIBILITIES

5.1 Operations and Plum Brook Station Teams

The Operations (Ops) and Plum Brook Station (PBS) teams shall be responsible for

- Providing guidance on the requirements of Federal, state, and local occupational health regulations
- Managing and overseeing the proper use of SIFs at GRC in accordance with the guidelines of this chapter
- Working with other SHeD teams, the Facilities Division, and researchers to identify uses of SIFs
- Conducting baseline and routine exposure surveys of work activities and procedures that require SIFs

- Reviewing standard operating procedures (SOPs) and job hazard analyses (JHAs) and conducting hazard assessments or assisting others conducting them
- Maintaining and calibrating sampling equipment, collecting samples, and forwarding samples for analysis
- Recommending appropriate SIF control procedures to minimize exposure
- Maintaining a record of all air and wipe sampling data, hazard assessments, and exposure monitoring
- Providing employee access to exposure data
- Notifying employee supervisors and Occupational Medicine Services for NASA civil servants about employees recommended for inclusion in the medical surveillance program
- Reviewing chemical purchases
- Maintaining the chemical inventory
- Conducting Hazard Communication (HAZCOM) training and specific SIF training, when appropriate
- Assisting in the collection and disposal of SIFs and waste SIF products
- Providing guidance for handling spill situations (see Environmental Programs Manual (EPM), Chapter **8**)
- Providing information on any air, water, or soil pollution issues

5.2 Facilities Division

The Facilities Division Project Managers shall be responsible for

- Notifying the appropriate Ops or PBS team industrial hygienists (IHs) about facility renovations, modifications, and operations that require the removal or use of SIFs
- Identifying SIFs and control procedures in construction contract specifications and drawings
- Ensuring that contractors use the appropriate controls and implement safe work practices to control SIF exposure during work with these materials

5.3 Supervisors

Supervisors shall be responsible for

- Ensuring their employee HAZCOM training includes specific training on the hazards of SIF and how to minimize exposures
- Requesting SIF hazard evaluations, when appropriate
- Enforcing the use of engineering and administrative controls including PPE

5.4 Employees

Employees shall be responsible for

- Notifying supervisor when using or handling SIFs
- Using SIFs in accordance with established procedures
- Using PPE as specified in established work procedures
- Notifying Medical Services or their medical provider and their supervisor if they experience any signs or symptoms of overexposure
- Notifying their supervisors of any operational changes or new uses of SIFs
- Discarding waste material through the SHeD waste management operation
- Attending required training

5.5 Medical Director, Occupational Medicine Services

The Medical Director of Occupational Medicine Services shall be responsible for

- Maintaining medical surveillance programs for civil servant and contractor employees exposed to hazardous chemicals that require medical monitoring
- Maintaining complete accurate records of all medical examinations for personnel in the medical surveillance program. Records are to be retained for at least 30 years. Results of examinations are to be discussed with employees as needed.
- Identifying examination elements following an exposure incident and communicating the elements with outside physicians, as necessary
- Notifying employees of medical surveillance results
- Notifying the appropriate Ops or PBS team IH about employees who may require an exposure evaluation based on clinical findings

5.6 Human Capital Development Branch Chief

The Human Capital Development Branch Chief shall be responsible for

- Scheduling NASA-sponsored employee training
- Maintaining records of employees who complete NASA-sponsored training and any associated examinations

6.0 REQUIREMENTS

This section includes procedures to assess and evaluate potential hazards, methods to reduce and control exposure to SIF through the use of safe work practices, engineering controls and PPE, training and medical surveillance requirements, and disposal and recordkeeping requirements.

6.1 Notification of Use of SIFs (*NASA NPR 1800.1, Section 4.7.1*)

SHED shall be kept apprised of SIF use throughout the Center and shall be notified by area supervisors when a process that uses SIFs changes or when new tasks, not previously assessed, require the use of SIFs. This information shall be provided in a timely manner to arrange for hazard assessments and prevent delay in the user's work.

6.2 Hazard Assessment (*NASA NPR 1800.1, Sections 4.2 and 4.7.1; 29 CFR 1910.132*)

All SIFs handled at GRC shall have a hazard assessment reviewed or performed by the appropriate Ops or PBS team IH. This assessment shall be performed when the material is first scheduled to be used. The SIF user or area supervisor shall contact the appropriate IH prior to use and arrange for a member of the team to observe how the material is handled, assess the hazards, and conduct exposure monitoring, if deemed necessary.

Where SSCs perform the hazard assessment and analysis, copies shall be made available to the Ops or PBS team IHs.

Refer to Occupational Health Programs Manual (OHPM), Chapter **21**, for more information on hazard and exposure assessments.

6.3 Exposure Assessment (*NASA NPR 1800.1, Sections 4.2 and 4.7.1; ACGIH 2009 TLVs*)

6.3.1 Air Monitoring

Using the hazard assessment information, exposure monitoring needs are identified based upon the specific material. The exposure needs are ranked or prioritized and the information maintained in a database to allow for the appropriate team to schedule sampling. Air sampling shall be conducted by an IH, industrial hygiene technician or environmental specialist, a contractor representative, or a third party. Air sampling may be conducted at the employer's or employee's request, as a result of a safety permit review, hazard analysis, facility renovation, maintenance activity, or emergency response such as a spill of SIF. Requests for assistance shall be directed to the appropriate Ops or PBS team IH.

6.3.2 Sampling Methodology

The National Institute for Occupational Safety and Health (NIOSH) 7400 method for fibers shall be used to assess worker exposures. Area monitoring shall be conducted. Where possible, sampling should be conducted before, during, and after operations. Sampling conducted during a particular work activity shall reflect worst-case exposures for the employee. Supervisors and employees shall be notified of the sample results.

6.3.3 Occupational Exposure Limits (*NASA NPR 1800.,1 Section 4.2; ACGIH 2009 TLVs*)

The following table provides GRC OELs and action levels (ALs) for SIFs. The AL is one-half the recommended OEL, and when such an exposure level is reached, certain requirements, such as the use of PPE, are mandatory.

TABLE 6.1.—GRC OCCUPATIONAL EXPOSURE LIMITS AND ACTION LEVELS

Synthetic inorganic fibers	Occupational exposure limit	Action level
	1 fiber/cubic centimeter (f/cc)[a] (inhalable)	0.5 f/cc (inhalable)
Continuous filament glass fibers	1 f/cc	0.5 f/cc
Continuous filament glass fibers	5 milligrams/cubic meter (mg/m^3)	2.5 mg/m^3
Glass wool fibers	1 f/cc	0.5 f/cc
Rock wool fibers	1 f/cc	0.5 f/cc
Slag wool fibers	1 f/cc	0.5 f/cc
Special purpose glass fibers	1 f/cc	0.5 f/cc
Refractory ceramic fibers	0.1 f/cc	0.05 f/cc

[a]Fibers are >5 microns long with an aspect ratio of ≥3:1.

6.3.1 - SHeD shall verify requirements for this section to ensure compliance with the Chapter. SHeD verification shall be accomplished by documenting air monitoring test results in the Medgate database.

6.4 Safe Work Practices

Note: *Large-scale installation or removal tasks involving RCF may require remediation by an experienced remediation or abatement contractor. Contact SHED for assistance.*

6.4.1 General Requirements

Work involving SIF shall be preplanned to control and minimize employee exposure and to protect against the contamination of work surfaces and equipment. For operations that cannot be accomplished using local exhaust ventilation to control exposures, workers shall use PPE, as listed in Section **6.6** (below). See Glenn Safety Manual, Chapter **15**, on PPE.

6.4.2 Workareas

Where necessary, facility and equipment work surfaces shall be protected from contamination by the use of plastic sheeting. The area in which work is to be done shall be secured by the use of warning signs and tape to prevent entry of the unprotected persons in accordance with the Glenn Safety Manual.

A high-efficiency particulate air (HEPA) vacuum cleaner shall be used to clean any debris once a task is completed and wet wiping shall follow the vacuuming, where appropriate.

6.5 Engineering Controls (*NASA NPR 1800.1, Section 4.43.2; 29 CFR 1910.1000(e)*)

To the extent feasible, priority shall be given to reducing employee exposure by the use of engineering controls such as using local exhaust ventilation and wet methods for activities involving SIF such as installation, removal, cutting, grinding, sawing, and operations that generate airborne fibers and dusts.

Where SIF materials are in place, they shall be enclosed and/or encapsulated to prevent the release of airborne fibers that may result from physical disturbance or air moving across the exposed SIF surface. Wherever possible, alternative materials shall be considered for RCF.

6.6 Personal Protective Equipment (*NASA NPR 1800.1 Section 4.43.2; 29 CFR 1910, Subpart I*)

Where engineering controls cannot be used to control exposures below half of the GRC exposure limit or the AL, the following PPE shall be used to prevent occupational exposure to SIF.

6.6.1 Mineral Wool and Rock and Glass Wool PPE Requirements

- Long-sleeved work clothing or disposable protective coveralls and head coverings
- Respiratory protection such as an air-purifying respirator equipped with HEPA filter where exposure requires they be used or filtering facepiece for N100 or P100 when not required based upon airborne exposure levels; cotton gloves may be worn
- Safety eyewear

Note: *Contact IH for advice on selection of an appropriate respirator; see OHPM, Chapter 4, on Respiratory Protection Program for more information.*

6.6.2 RCF PPE Requirements

- Disposable coveralls with head covering
- Disposable shoe covers
- Respiratory protection shall be selected based on IH hazard assessment of proposed work task; the minimum respirator is air purifying type, equipped with HEPA cartridges
- Eye protection

6.7 Training (*29 CFR 1910.1200*)

6.7.1 Hazard Communication Training

All employees using or handling SIFs shall receive HAZCOM training so they understand the information presented on a material safety data sheet (MSDS) and know how to protect themselves from the hazards.

6.7.2 Specific Hazard Training

All employees handling SIFs shall receive specific training that covers the specific hazards of the material, requirements of the HAZCOM standard and written program, and other information about how to prevent and/or control exposure.

6.7.2 - SHeD shall verify requirements for this section to ensure compliance with the Chapter. SHeD verification shall be accomplished by reviewing SATERN records or other personnel training records, as required.

6.8 Medical Surveillance *(NASA NPR 1800.1)*

Individuals using or handling chemicals may be required to receive baseline and routine medical examinations depending upon the material used and the extent of "exposure" or for approval to wear protective equipment. An individual requiring an exam, or their supervisor, shall contact the Ops team, IH, or Medical Services to receive directions on scheduling the examination or contact their employer's medical service provider according to their employer's guidelines.

Any employee involved in an incident where there is known or potential for excessive exposure to chemicals shall contact SHeD Ops Team for evaluation and Medical Services or their employer's medical provider to arrange for a post-exposure exam. This exam shall include tests deemed necessary by the physician handling the case.

6.9 Construction Use of SIFs

In general, proper controls or proper PPE are required when using chemicals at GRC. Construction contractors and their subcontractors bringing SIFs onto the site shall include the MSDSs for each, along with the method of exposure control as part of the Health and Safety Plan (HASP). The SHED staff members in charge of reviewing and approving HASPs shall approve or deny the use of chemicals and ensure proper controls are in place. Each construction contractor or subcontractor shall be responsible for assessing hazards, providing exposure monitoring, posting signs, providing training and PPE, and complying with OSHA regulations and NASA policy. See Glenn Safety Manual, Chapter **17**, for more information on construction safety.

6.10 Disposal

Those disposing of waste SIFs shall contact Waste Management for the disposal of materials containing SIF. Materials containing SIF will be handled and disposed of as a solid waste by using the same procedures that are currently being used by GRC for the disposal of asbestos-containing materials (ACMs). Although the U.S. Environmental Protection Agency does not currently regulate SIFs, it remains prudent for GRC to follow the most conservative methods of disposal for these materials in anticipation of future regulations.

6.11 Recordkeeping *(29 CFR 1910.1020)*

In accordance with the requirements of the 29 CFR 1910.1020, OSHA Employee Access to Medical and Exposure Records Standard, both medical and industrial hygiene sampling records shall be made available to affected employees or their representatives. Medical Services and/or IH shall maintain copies of records collected at NASA.

7.0 RECORDS

- Job Hazard Analyses (JHAs).—Maintained by SHED Ops and PBS teams, as appropriate.
- JHA equivalent form.—Maintained by contractor-generated form.
- Hazard assessments.—Maintained by SHeD Ops and PBS teams, as appropriate.
- Exposure assessment.—Maintained by SHeD Ops and PBS teams, as appropriate.
- Exposure assessment database.—Maintained by SHeD Ops and PBS teams.
- Medical examinations.—Maintained by Medical Services.
- Chemical inventory.—Maintained by SHeD Ops and PBS teams, as appropriate.

8.0 REFERENCES

Document Number	Document Name
29 CFR 1910.1200 and 29 CFR 1926.59	Occupational Safety and Health Administration, “Hazard Communication Standard”
29 CFR 1910, Subpart I	OSHA, “PPE Standard”
GLM–QS–1800.1	NASA Glenn Occupational Health Programs Manual, Chapter **21**, Hazard and Exposure Assessments
GLM–QS–1700.1	NASA Glenn Safety Manual, Chapter **15**, Personal Protective Equipment
GLM–QS–1800.1	NASA Glenn Occupational Health Manual, Chapter **4**, Respiratory Protection Program

GLM–QS–1700.1	NASA Glenn Safety Manual, Chapter **17**, Construction Safety
NPR 1800.1	NASA Procedural Requirements, "NASA Occupational Health Program Procedures"
IARC Vol. 81 (2002)	IARC Monographs on the Evaluation of Carcinogenic Risks to Humans "Man-Made Vitreous Fibers"
C–82	Job Hazard Analysis form
29 CFR 1910.1020	Occupational Safety and Health Administration, "Employee Access to Medical and Exposure Records" http://www.osha.gov/
2009 TLV Book	American Conference of Governmental Industrial Hygienists, "2009 TLVs and BEIs, Based on the Documentation of the Threshold Limit Values for Chemical Substances and Physical Agents & Biological Exposure Indices."

APPENDIX A.—DEFINITIONS AND ACRONYMS

Action level (AL).—The concentration or level of an agent at which it is deemed that some specific action should be taken. The action can range from monitoring the exposure on a routine basis to making engineering adjustments. In general, the action level is set at one-half of the adopted occupational exposure limit.

American Conference of Governmental Industrial Hygienists (ACGIH).—Professional society made up of Government-employed industrial hygienists as well as industrial hygienists from the private sector. The ACGIH is devoted to administrative and technical aspects of occupational and environmental health.

Asbestos-containing material (ACM).—Any product or material that contains >1 percent asbestos.

Carcinogen.—A substance or agent capable of causing or producing cancer in mammals, including humans. A chemical is considered to be a carcinogen or potential carcinogen if (a) it has been evaluated by the International Agency for Research on Cancer and found to be a carcinogen or potential carcinogen, (b) it is listed as a carcinogen or potential carcinogen in the annual report on carcinogens published by the National Toxicology Program, or (c) it is regulated by the National Institute for Occupational Safety and Health or Occupational Safety and Health Administration as a carcinogen.

Disposal.—Final placement for destruction of toxic, radioactive, or other wastes; surplus or banned pesticides or other chemicals; polluted soils; and drums containing hazardous materials from remedial actions or accidental releases. Disposal may be accomplished through use of approved secure landfills, surface impoundments, land farming, incineration, etc.

Engineering controls.—Designing out the hazard by process changes, substitution of harmful materials, isolation, ventilation, and source modification.

Epidemiology.—The science that deals with incidence distribution and control of disease in a population.

Environmental Programs Manual (EPM)

Excursion limits.—Criteria for substances that have 8-hr TLV–TWA but no TWA–STEL or TLV–C, due to the lack of sufficient toxicological data. These limits are based on the maximum concentration above the established 8-hr TLV–TWA, which short-term exposure events can occur during the working day without exceeding the accepted occupational exposure limit. Excursions in a worker exposure levels may exceed 3 times the TLV–TWA for no more than 30 min during the workday, and under no circumstances should they exceed 5 times the TLV–TWA, provided that the 8-hr TLV–TWA is not exceeded.

Fiber.—An elongated particle having an aspect ratio (i.e., a ratio of length to width) of greater than 3:1. A fiber may be naturally occurring (such as plant fibers and asbestiform silicate minerals) or synthetic (such as vitreous or graphite fibers).

Glenn Research Center (GRC)

Hazardous Communication (HazCom)

Health and Safety Plan (HASP)

High-efficiency particulate air (HEPA)

International Agency for Research on Cancer (IARC)

Industrial hygienist (IH).—Industrial hygienists are scientists and engineers committed to protecting the health and safety of people in the workplace and the community. Industrial hygiene is considered a "science," but it is also an art that involves judgment, creativity, and human interaction.

Job hazard analysis (JHA).—A technique that focuses on job tasks as a way to identify hazards before they occur. It focuses on the relationship between the worker, the task, the tools, and the work environment.

Mesothelioma.—Cancer of the membranes that line the chest and abdomen.

Material Safety Data Sheet (MSDS)

N100.—a NIOSH-approved particulate filtering facepiece respirator that filters at least 99.97 percent of airborne particles. The N100 is not resistant to oil.

National Institute for Occupational Safety and Health (NIOSH)

Occupational Health Programs Manual (OHPM)

Occupational exposure limit (OEL).—A health-based workplace standard to protect workers from adverse exposure (e.g., permissible exposure limits, threshold limit values, etc.).

Occupational Safety and Health Administration (OSHA)

P100.—a NIOSH-approved particulate filtering facepiece respirator that filters at least 99.97 percent of airborne particles. The P100 is strongly resistant to oil.

Permissible exposure limit (PEL).—The occupational exposure limit established by the Occupational Safety and Health Administration. The permissible concentration in air of a substance to which nearly all workers may be repeatedly exposed to 8 hr a day, 40 hr a week, for 30 yr without adverse effects.

Personal protective equipment (PPE)

Plum Brook Station (PBS)

Refractory ceramic fiber (RCF).—Synthetic, vitreous, noncrystalline, aluminum silicate-based fibers.

Recommended exposure limit (REL).—The recommended exposure limit for a substance in air established and published by NIOSH.

Respirable fiber.—Fibers with a diameter less than 3 microns, and a length greater than 5 microns.

Safety and Health Division (SHeD)

Sensitizer.—A material that is capable of causing an immune response in an individual. In most cases, initial exposure results in a normal response, but repeated exposures lead to progressively strong and abnormal responses.

Skin notation.—Denotes the possibility that dermal absorption may be a significant contribution to the overall body burden of the chemical (i.e., the airborne occupational exposure limit may not be adequate to protect the worker because the compound also readily penetrates the skin). Other reactions to the skin such as irritation, dermatitis, and sensitization are not sufficient to warrant the skin notation.

Standard operating procedure (SOP).—A written document that details an operation, analysis, or action whose mechanisms are thoroughly prescribed and that is commonly accepted as a method for performing certain routine or repetitive tasks.

Synthetic inorganic fiber (SIF).—See synthetic vitreous fiber.

Synthetic vitreous fiber.—A group of fibrous, inorganic materials that contain aluminum or calcium silicates made from rock, clay, slag, or glass. These fibers differ from natural mineral fibers such as asbestos because they do not have a molecular structure that is crystalline. The randomly oriented molecular structure of synthetic vitreous fibers is called an amorphous structure. There are three categories of synthetic vitreous fibers: (1) glass fibers, including glass wool and continuous filament (textile) glass, (2) mineral wool, which contains stone wool and slag wool, and (3) refractory ceramic fibers. They are also referred to as synthetic inorganic fibers.

Systemic effect.—Adverse effect that occurs at a site other than at the site of contact.

Support service contractor (SSC)

Suspect human carcinogen.—Human data are accepted as adequate in quality but are conflicting or insufficient to classify the agent as a confirmed human carcinogen; or, the agent is carcinogenic in experimental animals at dose(s), by route(s) of exposure, at site(s), of histologic type(s), or by mechanism(s) considered relevant to worker exposure. This classification is used primarily when there is limited evidence of carcinogenicity in humans and sufficient evidence of carcinogenicity in experimental animals with relevance to humans.

Target organs.—The organ of the body most affected by exposure to a particular substance, or the body organs that are affected by exposure to a hazardous chemical, physical, or biological agent.

Threshold limit value (TLV).—Established by the American Conference of Governmental Industrial Hygienists (ACGIH) to designate degree of exposure to contaminants and expressed as parts of vapor or gas per million parts of air by volume at 25 °C and 760 mm Hg pressure, as approximate milligrams of particles per cubic meter of air

(mg/m^3) or as number of fibers per cubic centimeter of air (f/cc). An exposure level under which it is believed most people can work consistently for 8 hr a day, day after day, with no harmful effects.

Threshold limit value—time-weighted average (TLV–TWA).—The time-weighted average concentration for a normal 8-hr workday and a 40-hr workweek to which nearly all workers may be exposed repeatedly, day after day, without adverse effects.

Threshold limit value—ceiling (TLV–C).—The concentration of a contaminant that should not be exceeded at any time.

Threshold limit value—short-term exposure limit (TLV–STEL).—A 15-min TWA exposure that is not to be exceeded at any time during a workday even if the 8-hr TWA is within the TLV–TWA. Exposures above the TLV–TWA up to the STEL should not be longer than 15 min., shall not occur more than 4 times per day, and there should be at least 60 min. between successive exposures in this range.

Time-weighted average (TWA) exposure.—Average concentration of an agent over a given working period of a person's exposure, as determined by sampling.

Toxicity.—A relative property of a chemical agent that refers to harmful effects on some biologic mechanism and the conditions under which the effect occurs.

Toxicology.—Scientific study of poisons, their actions, their detection, and treatment of conditions produced by them.

Toxic effect.—Harmful or poisonous effect of a chemical agent.

8-hr TWA.—The average concentration to which an employee is actually exposed over an 8-hr day.

Wet methods.—The use of amended water (water with ≤10 percent surfactant dish washing liquid, etc.) to adequately wet the synthetic organic fiber material to prevent the release of fibers and dust during the removal, repair, and cleanup operation.

Contents

1.0 PURPOSE....2
2.0 APPLICABILITY....2
3.0 BACKGROUND....2
4.0 POLICY....2
5.0 RESPONSIBILITIES....2
5.1 Center Director....2
5.2 Chief of Safety and Health Division....2
5.3 Hazard Communication Program Lead....3
5.4 Human Capital Development Branch....3
5.5 Employees (Civil Servants, Support Service Contractors, and Tenant Organizations)....3
5.6 Supervisors (Civil Servants, Support Service Contractors, and Tenant Organizations)....3
5.7 Resident Contractor Contracting Officer's Technical Representative (COTR)....3
5.8 SHED Plum Brook Station Team....4
6.0 REQUIREMENTS....4
6.1 Written Program (*29 CFR 1910.1200*)....4
6.2 Material Safety Data Sheet Program (*29 CFR 1910.1200*)....4
6.3 Training Program (*29 CFR 1910.1200*)....4
6.4 Chemical Inventory Program (*29 CFR 1910.1200*)....5
6.5 Construction Program (*29 CFR 1926.59*)....5
6.6 Hazard Assessment Plan (*29 CFR 1910.1200* and *29 CFR 1910.1450*)....5
7.0 RECORDS....5
8.0 REFERENCES....5
APPENDIX A.—DEFINITIONS AND ACRONYMS....6

Chapter 16—Hazard Communication Policy

Note: *The current version of this chapter is maintained and approved by the Safety and Health Division (SHeD). The last revision date of this chapter was May 2012. The current version is located on the Glenn Research Center intranet at http://smad-ext.grc.nasa.gov/shed/pub/ohpm/ohpm-manual.pdf. Approved by Chief of Safety and Health Division.*

1.0 PURPOSE

The Glenn Research Center (GRC) Hazard Communication (HAZCOM) Policy was established to formalize the methods of communicating information on hazardous chemicals and to ensure that correct and complete information is available to GRC employees, summer and part-time temporary employees, tenant employees, construction contractors, and resident support services contractor personnel. It is not only the intent of GRC to fully comply with the Occupational Safety and Health Administration (OSHA) rules, but also to improve the overall safety of GRC.

2.0 APPLICABILITY

The GRC HAZCOM Policy applies to GRC employees, summer and part-time temporary employees, tenant employees, construction contractors, and resident support services contractor personnel who may be exposed or may expose others to hazardous chemicals under normal conditions of use or in a foreseeable emergency at Lewis Field, Plum Brook Station (PBS), or any associated offsite facility. A HAZCOM Program has been established to ensure Center compliance with OSHA regulations. The HAZCOM Program contains general information and establishes minimum requirements for the safe handling and use of hazardous chemicals.

3.0 BACKGROUND

On July 25, 1986, OSHA ruled that, pursuant to Executive Order 12196, all Federal agency heads were required to comply, by May 23, 1988, with the OSHA Hazard Communication Standard as set forth in 29 Code of Federal Regulations (CFR) 1910.1200. This chapter prescribes GRC's implementation of those directives.

4.0 POLICY

It is GRC policy that employee health and safety are the highest priority. Therefore, all GRC employees, summer and part-time temporary employees, tenant employees, and resident support services contractor personnel involved in handling, storage, transportation, use, production, or disposal of chemicals shall be informed that their lives or health may depend on their knowledge of the chemicals they work with and on their taking appropriate measures to protect themselves and minimize exposure to hazardous chemicals. As a multiemployer worksite, each employer at GRC must have its own HAZCOM program that describes how they will share information with other employers, their own employees and SHED personnel regarding Material Safety Data Sheets (MSDSs), including access to them, precautionary measures, and any labeling systems used at the workplace.

5.0 RESPONSIBILITIES

5.1 Center Director

The Center Director provides continuing support for Center-wide HAZCOM activities.

5.2 Chief of Safety and Health Division

- Appoints a technically qualified individual as the HAZCOM Program Lead to carry out the responsibilities set forth in the HAZCOM Program.
- Assures the availability of resources necessary for the establishment, execution, and maintenance of the HAZCOM Program.
- Assigns organization responsibility and allocates resources to ensure that all parts of 29 CFR 1910.1200 are implemented and maintained.

5.3 Hazard Communication Program Lead

- Establishes, administers, and maintains the GRC HAZCOM Program in coordination with all appropriate GRC personnel.
- Ensures that the GRC training, inventory, MSDSs, and labeling requirements as specified in 29 CFR 1910.1200 are in place and maintained.
- Ensures that recordkeeping requirements are established and maintained as required by 29 CFR 1910.1200.
- Reviews the HAZCOM Program for compliance with OSHA requirements.
- Ensures that the appropriate warning placards and/or signs and labels are provided or arranged for and in place at designated areas as necessary.

5.4 Human Capital Development Division Representative

- Implements the training requirements of 29 CFR 1910.1200 in conjunction with the HAZCOM Program Lead.
- If requested, provides suitable certificates to employees upon completion of scheduled training by such employees.
- Establishes and maintains the official training records for NASA employees as required in 29 CFR 1910.1200.

5.5 Employees (Civil Servants, Support Service Contractors, and Tenant Organizations)

- Read and understand MSDS for chemicals in assigned workarea.
- Contact the SHeD Operations Team and the SHED PBS team at PBS if an MSDS is not available.
- Contact supervisor or the SHeD Operations Team and the SHeD PBS team at PBS if employee does not understand an MSDS.
- All chemical containers shall be labeled to identify contents and hazards.
- Attend initial and refresher HAZCOM training sessions, as required.
- Follow all proper procedures for purchasing, storing, using, and disposing of hazardous chemicals. Employees are reminded not to buy more chemicals than they can possibly use in their project or to stockpile material.
- Follow the information and precautions specified on the MSDS, such as personal protective equipment, storage requirements, ventilation requirements, emergency equipment, etc.

5.6 Supervisors (Civil Servants, Support Service Contractors, and Tenant Organizations)

- Ensure that their employees are appropriately trained to handle all hazardous chemicals in their workareas.
- Ensure that all of the information as specified in 29 CFR 1910.1200 is available to each employee.
- Implementation of the HAZCOM Program is the responsibility of each supervisor.
- Ensure employees follow the information and precautions specified on the MSDS, such as personal protective equipment, storage requirements, ventilation requirements, emergency equipment, etc.

5.7 Resident Contractor Contracting Officer's Technical Representative (COTR)

- Ensures that contractors have a HAZCOM program (if required) and comply with all elements of this program.
- Ensures that contractors have an approved Health and Safety Plan (HASP) and comply with all elements of this plan (29 CFR 1926.59).
- Effectively communicates issues and concerns to SHeD.

- Responds to SHeD requests for information.
- At minimum, ensures that MSDS and inventory lists are available onsite in the workarea and makes these available to the SHeD Chemical Management Lead.

5.8 SHeD Plum Brook Station Team Lead

- Ensures compliance with the applicable provisions of this chapter by the PBS staff, all tenant organizations, and other resident and nonresident contractors.
- Coordinates with the HAZCOM Program Lead on matters pertaining to 29 CFR 1910.1200 and 29 CFR 1926.59.

6.0 REQUIREMENTS

Note: Requirements for this chapter are defined in 29 CFR 1910.1200 and 29 CFR 1926.59. The plan to address these requirements is found in the Chemical Hazard Communication Plan (Sections 6.1.1 to 6.1.5) or the Chemical Hygiene Plan (Section 6.1.6). Please refer to these documents for additional and specific guidance.

All aspects of GRC HAZCOM will ensure compliance as specified in 29 CFR 1910.1200 and 29 CFR 1926.59. The following items are required by these references.

6.1 Written Program (*29 CFR 1910.1200*)

As part of the HAZCOM Program, a written HAZCOM Program shall be maintained and reviewed annually by the GRC HAZCOM Program Lead. The requirements of 29 CFR 1910.1200 and the programs in place at GRC must meet the requirements defined in the written HAZCOM Program. Sections 6.1.2 through 6.1.6 are included in the HAZCOM Program Plan.

6.1 - The SHeD verification procedure to ensure compliance with the requirements listed in this section shall be accomplished updating the HAZCOM Program Plan annually and posting the most current version in the OHPM.

6.2 Material Safety Data Sheet Program (*29 CFR 1910.1200*)

As part of the HAZCOM Program, an MSDS plan specifies that the master MSDS files shall be kept, maintained, and distributed by the SHeD Operations Team and the SHeD PBS team. MSDSs are available in all workareas through the GRC MSDS online Web page and at PBS, through the electronic Chemical Inventory Database. At PBS, paper copies of MSDSs are kept at the facilities where the chemicals are used or stored, and electronic copies of MSDSs can be accessed through the master MSDS database from any PBS computer. MSDSs must be supplied with each chemical order and provided to SHeD. MSDSs for chemicals already onsite can be requested through the SHeD Operations Team and the SHeD PBS team. A Hazardous Chemical Labeling Plan includes the chemical name and appropriate hazard warning, including target organs to ensure that containers of hazardous chemicals are labeled properly. Labels can be requested through SHeD.

6.2 - The SHeD verification procedure to ensure compliance with the requirements listed in this section shall be accomplished by reviewing all new chemical orders to ensure that an MSDS is currently in the database or is procured. The MSDS database can be reviewed at any time at http://shedapps.grc.nasa.gov/msds/home.cfm.

6.3 Training Program (*29 CFR 1910.1200*)

As part of the HAZCOM Program, a GRC training plan shall ensure that employees with routine exposure to hazardous chemicals are aware of the OSHA standards, the hazards of the chemicals that they work with, and the ways to protect themselves from those hazards.

6.3 - The SHeD verification procedure to ensure compliance with the requirements listed in this section, shall be accomplished by providing initial HAZCOM and refresher HazCom training. These training files are kept in SATERN by the Human Capital Development Division.

6.4 Chemical Inventory Program (*29 CFR 1910.1200*)

As part of the HAZCOM Program at Lewis Field, a Chemical Inventory Plan shall include the tracking of chemicals at GRC, bar coding, and the maintenance of the inventory is maintained. Employees who use chemicals must submit a Chemical Inventory Usage Form, NASA **C–3032**, to SHeD whenever the chemical inventory is moved to a new location. Additional databases for fuels and returnable containers (RETCONs) are maintained by the Logistics and Technical Information Division. At PBS, the support service contractor is responsible for maintaining the chemical inventory.

6.4 - The SHeD verification procedure to ensure compliance with the requirements listed in this section shall be accomplished by reviewing the inventory at http://shedapps.grc.nasa.gov/chemex/home.cfm or directly through the Chemical Management Database.

6.5 Construction Program (*29 CFR 1926.59*)

As part of the HAZCOM Program, the construction contractor COTR requires contractors to submit their HAZCOM programs, MSDSs (typically included in the HASP), and certification statements from their subcontractors stating that they have a HAZCOM program before they are allowed to begin work. COTRs will supply SHeD with the MSDS list and provide the contractor with GRC-specific chemical information as needed.

6.5 - The SHeD verification procedure to ensure compliance with the requirements listed in this section, shall be accomplished by reviewing all HASPs to ensure HAZCOM criteria (MSDSs, HazCom plan) are appropriate before granting approval to begin work. This information resides in the Construction Program e-room.

6.6 Hazard Assessment Plan (*29 CFR 1910.1200* and *29 CFR 1910.1450*)

As part of the HAZCOM Program, a hazard assessment plan that includes how the hazards of chemicals are determined, what measures are to be taken to protect GRC employees from those hazards, and how GRC will be working to reduce the hazards in each workarea, must be developed and maintained. Additional information on hazard identification can be found in the Chemical Hygiene Plan, the Hazard Assessment/Exposure Assessment Program, the HASP process, the Safety Permit processes, the confined space process, and the hot work process.

6.6 - The SHeD verification procedure to ensure compliance with the requirements listed in this section, shall be accomplished by updating these documents on a regular basis and ensuring that they are available to all employees.

7.0 RECORDS

MSDSs.—Maintained by SHeD.

Chemical inventory.—Maintained by SHeD.

Training records for civil servants.—Maintained by Human Capital Development Division.

Training Records for affected employees.—Maintained by support service contractors and tenant organizations.

8.0 REFERENCES

Document number	Document title
29 CFR 1910.1450	Occupational Exposures to Hazardous Chemicals in Laboratories
29 CFR 1910.1200	Occupational Safety and Health Standards Hazard Communication
Executive Order 12196	Occupational Safety and Health Provisions for Federal Employees
NPR 4100.1D	NASA Procedural Requirement, Materials Inventory Management Manual
NPR 1800.1C	NASA Procedural Requirement, NASA Occupational Health Program Procedures
NPR 8715.1	NASA Occupational Safety and Health Programs

APPENDIX A.—DEFINITIONS AND ACRONYMS

Carcinogen.—A chemical is considered to be a carcinogen if it has been evaluated by the International Agency for Research on Cancer (IARC) and found to be a carcinogen or potential carcinogen, or if it is listed as a carcinogen or potential carcinogen in the Annual Report on Carcinogens published by the National Toxicology Program (NTP) (latest edition), or if it is regulated by Occupational Safety and Health Administration as a carcinogen.

Chemical inventory.—A list of hazardous chemicals known to be present in the workplace and workareas. At Lewis Field, this list is maintained as part of the Chemical Management Systems database at Lewis Field and the Chemical Inventory database at Plum Brook Station.

Code of Federal Regulations (CFR)

Contracting Officer's Technical Representative (COTR)

Employee.—A GRC, tenant, or resident support service contractor employee who may be exposed to hazardous chemicals in his or her assigned workarea under normal operating conditions or in foreseeable emergencies.

Flammable

- **Aerosol**.—An aerosol that yields a flame projection exceeding 18 in. at full valve opening or a flashback at any degree of valve opening.
- **Gas**.—A gas that at ambient temperature and pressure forms a flammable mixture with air at a concentration of 13 percent by volume or less, or a gas that at ambient temperature and pressure forms a range of flammable mixtures with air greater than 12 percent by volume, regardless of the lower limit.
- **Liquid**.—Any liquid having a flash point below 100 °F (37.8 °C), except any mixture having components with flash points of 100 °F (37.8 °C) or higher, the total of which make up 99 percent or more of the total volume of the mixture.
- **Solid**.—A solid that is liable to cause fire through friction, absorption of moisture, spontaneous chemical change, or retained heat from manufacturing or processing, or which can be ignited readily and when ignited burns so vigorously and persistently as to create a serious hazard.

Glenn Research Center (GRC)

Hazardous chemical.—Any chemical that is either a physical or health hazard.

Hazard communication (HAZCOM)

Hazardous material.—Any material defined as hazardous in 49 Code of Federal Regulations (CFR) 171.8 that has been determined to be capable of posing an unreasonable risk to health, safety, and property when transported in commerce and that has been so designated. Such material has one or more toxic, flammable, corrosive, or reactive properties. All materials, listed under Title III of the Superfund Amendments and Reauthorization Act of 1986 (SARA), are included.

Hazard Communication Program.—Written document that describes how an employer or facility complies with the requirements of the Federal Hazard Communication Standard.

Hazard Communication Standard (29 CFR 1910.1200 for General Industry, 29 CFR 1926.59 for Construction).—Federal regulation developed by the Occupational Health and Safety Administration to reduce illness and injury caused by chemical hazards in the workplace (requires evaluation of chemical hazards and communication of hazard information to both employers and employees).

Health and Safety Plan (HASP)

Health hazard.—A chemical for which there is scientifically established evidence that acute or chronic health effects may occur in exposed employees.

Highly toxic.—A chemical falling within any of the following categories:

- A chemical that has a median lethal dose (LD50) of 50 mg or less per kg of body weight when administered orally to albino rats weighing between 200 and 300 g each.

- A chemical that has a median lethal dose (LD50) of 200 mg or less per kg of body weight when administered by continuous contact for 24 hr (or less if death occurs within 24 hr) with the bare skin of albino rabbits weighing between 2 and 3 kg each.
- A chemical that has a median lethal concentration (LC50) in air of 200 parts per million by volume or less of gas or vapor, or 2 mg/liter or less of mist, fume, or dust, when administered by continuous inhalation for 1 hr (or less if death occurs within 1 hr) to albino rats weighing between 200 and 300 g each.

Material Safety Data Sheet (MSDS).—A document, provided by the manufacturer or importer of a hazardous chemical or prepared by researchers that identifies a hazardous material and provides information about the physical and health hazards associated with it. Although MSDSs vary in both format and content, all must contain the following information: product identification, manufacturer's name and address, hazardous ingredients information, physical and chemical characteristics, fire and explosion hazard data, reactivity data, health hazard data, precautions for safe handling and use, and control measures.

NASA Procedural Requirement (NPR)

Occupational Safety and Health Administration (OSHA).—A Federal agency responsible for establishing and enforcing standards for exposure of workers to harmful materials in industrial atmospheres, and other matters affecting the health and well-being of industrial personnel.

Physical hazard.—A chemical or product for which there is scientifically established evidence that the chemical is a combustible liquid, a compressed gas, explosive, flammable, an organic peroxide, an oxidizer, pyrophoric, unstable (reactive), or is water reactive.

Plum Brook Station (PBS)

Returnable container (RETCON)

Toxic.—A chemical falling within any one (or more) of the following categories:

- A chemical that has a median lethal dose (LD50) of more than 50 mg per kg but not more than 500 mg per kg of body weight when administered orally to albino rats weighing between 200 and 300 g each.

A chemical that has a median lethal dose (LD50) of more than 200 mg per kg but not more than 1000 mg per kg of body weight when administered by continuous contact for 24 hr (or less if death occurs with 24 hr) with the bare skin of albino rabbits weighing between 2 and 3 kg each.

- A chemical that has a median lethal concentration (LC50) in air of more than 200 parts per million but not more than 2000 parts per million by volume or less of gas or vapor, or more than 2 mg/liter but not more than 20 mg/liter of mist, fume, or dust, when administered by continuous inhalation for 1 hr (or less if death occurs within 1 hr) to albino rats weighing between 200 and 300 g each.

Workarea.—A room, laboratory, warehouse, or other defined area within Lewis Field Center, Plum Brook Station, or an associated offsite facility wherein hazardous chemicals are used, stored, or transported, and where employees are present.

Contents

1.0 PURPOSE....2
2.0 APPLICABILITY....2
3.0 BACKGROUND....2
4.0 POLICY....2
5.0 RESPONSIBILITIES....2
5.1 SHED Program Lead....2
5.2 Supervisors....3
5.3 Employees....3
5.4 Medical Director, Occupational Medicine Services....4
5.5 Human Capital Development Branch Chief....4
6.0 REQUIREMENTS....4
6.1 Hazard Assessment *(29CFR1910.132(d); NPR 1800.1C Section 4.3)*....4
6.2 Exposure Assessment *(NPR 1800.1C Section 4.3)*....5
6.3 Occupational Exposure Limits *(NPR 1800.1C Section 4.2)*....5
6.4 Training *(29CFR1910.1200; NPR 1800.1C Section 4.1.6)*....6
6.5 Elimination and Control of Hazards *(NPR 1800.1C Section 4.4.3.2)*....6
6.6 Medical Surveillance (*29 CFR 1910; NASA NPR 1800.1C*)....6
6.7 Construction Chemical Use *(NPR 1800.1C Section 4)*....6
7.0 RECORDS....7
8.0 REFERENCES....7
APPENDIX A .—DEFINITIONS AND ACRONYMS....8

Chapter 21—Hazard and Exposure Assessments

Note: *The current version of this chapter is maintained and approved by the Safety and Health Division (SHeD). The last revision date of this chapter was April 2012. The current version is located on the Glenn Research Center intranet at http://smad-ext.grc.nasa.gov/shed/pub/ohpm/ohpm-manual.pdf. Approved by the Chief of Safety and Health Division.*

1.0 PURPOSE

The objective of the Hazard and Exposure Assessment (HEA) Program is to provide healthful working environments throughout Glenn Research Center (GRC) Lewis Field and Plum Brook Station (PBS) by reviewing potentially hazardous operations and conducting personal and, where appropriate, area monitoring to evaluate worker exposure to hazardous chemical agents. This program also provides guidance on documentation of the potential hazards and a mechanism for prioritizing data collection.

> ***Note****: Policies regarding the safe use of and specific regulatory requirements for certain hazardous agents (e.g., Occupational Safety and Health Administration (OSHA)-regulated chemicals, lead, asbestos, mercury, bloodborne pathogens, radiation, and noise) are covered in other Occupational Health Programs Manual (OHPM) chapters.*

2.0 APPLICABILITY

This chapter is applicable to all civil servant and support service contractor (SSC) employees assigned to GRC sites, construction contractors, students, and visitors.

SSCs and construction contractors are responsible for the health and safety of their employees and for hazard analyses, training, personal protective equipment (PPE), medical surveillance, and other requirements to ensure compliance with NASA policy.

This chapter applies to hazardous chemicals that are currently used or that will be used in the future at GRC. Where chemicals such as asbestos, lead, mercury, etc., are covered under other chapters, those requirements supersede these.

3.0 BACKGROUND

Occupational Safety and Health Administration (OSHA) promulgated compliance standards for a number of toxic chemicals and physical hazards. To determine the potential for exposure, hazard assessments are required. Where the potential for significant exposure is present and/or the need for protective equipment deemed necessary, an exposure assessment is warranted. Job hazard analyses (JHAs) or hazard assessments are needed as an integral part of assessing risk of exposure to various contaminants. Therefore, JHAs or equivalent hazard assessments are required as indicated in the Glenn Safety Manual, Chapter **33** and Chapter 15.

The Center for Disease Control regulates biological hazards. See OHPM Chapter 11 for more information regarding biological hazards.

4.0 POLICY

GRC's policy is to comply with all applicable regulations regarding chemicals or biological substances and to prevent illness to workers and damage to the environment from their use, removal, and disposal. To accomplish this, all personnel shall comply with the requirements of this chapter.

It is also NASA's policy to adhere to OSHA permissible exposure limits (PELs), the American Conference of Governmental Industrial Hygienists (ACGIH) threshold limit values (TLVs), or NASA internal Occupational Exposure Limits (OELs), whichever are most restrictive, to ensure worker protection.

5.0 RESPONSIBILITIES

5.1 SHeD Program Lead

The following shall be the responsibilities of the SHED Program Lead, along with support from SHED Chemical Management and FE Waste Management as indicated,

- Provides guidance on the requirements of Federal, state, and local occupational health regulations
- Reviews safety permits, standard operation procedures (SOPs), JHAs, or equivalent information and conducts hazard assessments or assists others with conducting them
- Performs exposure assessments
- Recommends procedures to control and/or minimize exposure
- Recommends employees for inclusion in a medical surveillance program, when required
- Maintains the task and exposure databases for all related operations
- Conducts additional training beyond that provided under the Hazard Communication Program
- Maintains sampling equipment and performs calibrations as needed
- Maintains the chemical inventory (Chemical Management)
- Reviews chemical purchases and notifies SHeD industrial hygienists (IHs), as appropriate, when hazardous chemicals, biological substances or products containing them are requested (Chemical Management)
- Conducts Hazard Communication (HAZCOM) training
- Provides guidance for handling spill situations (see Environmental Programs Manual, Chapter **8**) (Waste Management, FE)
- Assists in the collection and disposal of hazardous chemicals or biological materials and waste products containing these (Waste Management)

5.2 Supervisors

Supervisors shall

- Identify users of hazardous chemicals or those performing hazardous operations within the guidelines of this policy and notify the appropriate SHeD personnel of the user's name and the particular material prior to its use
- Perform hazard assessments
- Ensure areas where hazardous chemicals or biological substances are used are properly marked and access is restricted
- Ensures employees for inclusion in a medical surveillance program receive exams.
- Ensure employees follow good work practices and wear required PPE
- Ensure employees meet training requirements

5.3 Employees

Employees shall

- Procure chemicals or biological substances in compliance with Occupational Health Program Manual, Chapter **14**
- Use hazardous chemicals or perform hazardous operations in accordance with procedures established for safe use of the chemicals or biological substances.
- Use PPE as specified in established work procedures or by the applicable hazard assessment
- Complete required medical surveillance exams
- Notify Medical Services or their medical provider and their supervisor if they experience any signs or symptoms of overexposure
- Notify their supervisors of any operational changes or new uses of the regulated chemicals or biological agents

- Discard waste material through NASA waste management
- Attend training, when required

5.4 Medical Director, Occupational Medicine Services

- The Occupational Medical Services Director shall maintain medical surveillance programs for civil servant and contractor employees exposed to hazardous chemicals that require medical monitoring
- Maintain complete, accurate records of all medical examinations for personnel in the medical surveillance program. Records are to be retained for at least 30 yr. Results of examinations are to be discussed with employees as needed. The Medical Director shall also identify examination elements following an exposure incident and assisting with providing that information to other medical service providers.

5.5 Human Capital Development Branch Chief

The Human Capital Development Branch Chief shall Schedule employee training

- Maintain records for employees who complete NASA-sponsored training and any associated examinations

6.0 REQUIREMENTS

The Safety and Health Division (SHeD) shall be kept apprised of the use of chemical or biological hazards or other operations (e.g., welding, forklift operation, etc.) that can generate hazardous chemical exposures throughout GRC and shall be notified by the area supervisor when a process that requires the use of hazardous materials changes, or when new tasks not previously assessed require the use of hazardous materials. This information shall be provided in a timely manner in order to arrange for hazard assessments and to prevent delay in the user's work.

6.1 Hazard Assessment *(29CFR1910.132(d); NPR 1800.1C Section 4.3)*

6.1 - The SHeD verification procedure to ensure compliance with the requirements listed in this section shall be accomplished by reviewing chemical purchase information and all applicable hazard assessment information.

All those using hazardous materials or potentially exposed to hazardous materials generated from a particular operation at GRC shall have a hazard assessment. This assessment shall be performed during the next scheduled use of the material using the appropriate forms for a hazard analysis (HA), a JHA (NASA **C–82, C-237 PPE Hazard Analysis and Assessment**), or an equivalent form. The user or area supervisor shall develop a HA, JHA, or an equivalent form of hazard analysis, whichever is most appropriate, or shall review the information developed by an employee and contact a SHeD IH prior to the use of the material and arrange for SHeD to observe the handling of the material, assess the hazards, and perform exposure monitoring, if necessary.

Results of the hazard assessments for all current users of a given material will enable the SHED IH to determine if exposure monitoring is needed and whether specific controls are required for the operation.

A hazard assessment shall involve an IH when

- An extremely or highly hazardous material, such as an OSHA-regulated chemical, a non-regulated carcinogen, a biological toxin, or a reproductive or developmental hazard, etc., is being requested
- An operation involves the use of materials that may generate a hazardous chemical or biological exposure
- A process involved with the aforementioned materials or operations changes
- A new task, not previously assessed, requires the use of such materials or involves an operation generating hazardous materials

Hazard assessments shall include a

- Review of the HA, JHA, or other hazard assessment information for all tasks involving hazardous materials
- Review of related regulated or recommended standards to determine regulatory requirements

- Meeting with the requester to discuss usage, handling procedures, possible engineering controls, PPE, and scheduling of exposure monitoring

In order to be useful and effective, hazard assessments need to be current. Hazard assessments shall be reviewed and updated at least every 3 years or whenever changes to equipment, materials, work procedures, or other changes affect potential exposure. In addition, whenever a new operation, type of work or work-related activity is introduced, a hazard assessment shall be conducted. This includes worksite redesign, new equipment, new processes introduced, different materials being used, etc.

6.2 Exposure Assessment *(NPR 1800.1C Section 4.3)*

6.2 The SHeD verification procedure to ensure compliance with the requirements listed in this section shall be accomplished by reviewing Medgate survey and monitoring information and previous database information.

Using the hazard assessment information, exposure monitoring needs are identified based upon the various characteristics of potentially hazardous chemical or biological substance. The exposure needs are ranked or prioritized and this information is maintained in a database to allow for the SHeD IH to systematically evaluate the jobs or tasks. Those tasks with the highest ranking will be monitored first. The hazard assessment information will be recorded in the MedGate database system, when available. Until that time, they will be recorded on the forms listed in Section **6.1**.

Similar exposure groups shall be established and monitored. Exposure monitoring shall be conducted during typical or "worst case" use of the hazardous material and, where deemed appropriate, conducted routinely based upon use and exposure potential. The exposure assessment(s) shall be documented in the Medgate database, when available, and by standard reports and/or data tables.

Periodically, exposures shall be reassessed to

- Update exposure groups and profiles
- Document changes that may influence exposures
- Identify unacceptable exposures requiring control
- Identify uncertain exposures for further information gathering

This reassessment information will lead to a prioritized schedule for reevaluation, updated basic workplace characterization, and updated exposure groups and exposure profiles.

6.3 Occupational Exposure Limits *(NPR 1800.1C Section 4.2)*

6.3 The SHeD verification procedure to ensure compliance with the requirements listed in this section shall be accomplished by reviewing current exposure limits as listed in Medgate software.

NASA GRC strives to comply with applicable regulations of other Federal agencies as well as NASA's health and safety requirements. In the event of conflicting regulations, the more protective requirements will be used. In general the OSHA PELs will be met, but other occupational exposure limits (OELs) recommended and established by other knowledgeable authorities such as the ACGIH TLVs, National Institute for Occupational Safety and Health (NIOSH) recommended exposure limits (REL), American Industrial Hygiene Association (AIHA) workplace environmental exposure limits (WEELs), and others may be used.

Where no established OEL exists for a specific chemical, a working OEL may be established and used after thorough review of the data available for the chemical and according to established industrial hygiene exposure limit setting guidelines. This includes reviewing analogous chemical data, animal experimentation studies and extrapolation data, human experience, and epidemiology data. The review process shall be thoroughly documented and a written rationale produced.

6.4 Training *(29CFR1910.1200; NPR 1800.1C Section 4.1.6)*

6.4 The SHeD verification procedure to ensure compliance with the requirements listed in this section shall be accomplished by reviewing SATERN records or other personal training records as available. Training can also be verified through Facility inspections, reviewing JHA, PPE hazard assessment, training records, and SOPs/LSOPs.

All employees using chemicals or performing operations that generate potential chemical exposure shall receive Hazard Communication (HazCom) training so they understand the information presented on a Material Safety Data Sheet (MSDS) and know how to protect themselves from the hazards of the toxic material. Refer to the Occupational Health Programs Manual, Chapter **16,** and the associated HazCom Program for requirements.

All employees using highly hazardous chemicals or performing operations that generate potential chemical exposure shall have specific training for the particular chemical being used or handled. The training shall cover the specific hazards of the material, requirements of the standard, and other information regarding controlling exposure.

6.5 Elimination and Control of Hazards *(NPR 1800.1C Section 4.4.3.2)*

6.5 The SHeD verification procedure to ensure compliance with the requirements listed in this section shall be accomplished by reviewing hazardous tasks and Safety Permits, LSOPs, JHAs or equivalent information and other documents that indicate controls required for activities involving chemical, physical, or biological hazards conducted at GRC.

Whenever possible, hazards shall be eliminated. Hazards that can be eliminated promptly and cost-effectively shall be performed quickly to eliminate potential exposure and the need for further evaluation. When working on eliminating or controlling hazards, those knowledgeable about the work shall be involved either through consultation or direct participation. The high-risk hazards shall be addressed first.

Where elimination is not feasible, engineering or administrative controls should be implemented. When such controls do not completely eliminate the hazard or when they are not feasible, protective equipment shall be required. Protective equipment may also be used when the task is infrequent or non-routine.

Controls shall also be prioritized such that the chemical or biological hazards presenting the greatest risk are managed first. Short- and long-term control options shall be reviewed and included as part of the control strategy.

6.6 Medical Surveillance (*29 CFR 1910; NASA NPR 1800.1C*)

6.6 The SHeD verification procedure to ensure compliance with the requirements listed in this section shall be accomplished by reviewing medical surveillance program records to determine if those required to be in such programs are and have received the appropriate exams.

Individuals using, handling, or otherwise exposed to hazardous chemicals may be required to receive baseline and routine medical examinations depending upon the material and the extent of "exposure" or for approval to wear protective equipment. Once a SHeD IH determines an exposure requires medical surveillance, the individual(s) shall be notified to contact Medical Services or their medical provider to schedule an exam. The minimum exam requirements shall be determined by Medical Services and that information shared with outside medical service providers. The individual supervisors shall be kept informed about these requirements.

Any employee involved in an incident where there is known or suspected excessive exposure to chemicals shall immediately contact SHeD, as appropriate, for evaluation and Medical Services or their medical provider to arrange for a post-exposure exam. This exam shall include tests deemed necessary by the physician. The employee's supervisor shall also be kept informed.

6.7 Construction Chemical Use *(NPR 1800.1C Section 4)*

6.7 The SHeD verification procedure to ensure compliance with the requirements listed in this section shall be accomplished by reviewing health and safety plans.

In general, proper controls or proper PPE shall be required when using chemicals or performing operations that have the potential to generate chemical or biological exposures at GRC. Construction contractors and their subcontractors bringing chemicals on the site shall include the MSDSs for them along with the method of exposure control as part of the site specific health and safety plan (HASP). The SHeD HASP reviewer IH or their alternate charged with reviewing and approving HASP's shall approve or deny the use chemicals and ensure proper controls are in place to protect NASA employees. Each construction contractor or subcontractor shall be responsible for assessing hazards, providing for exposure monitoring, training for their employees, using engineering controls where feasible, providing proper PPE, medical surveillance where required, posting warning signs, etc.

7.0 RECORDS

- Hazard analyses.—Maintained by SHeD.
- Job hazard analyses.—Maintained by SHeD.
- Hazard assessments.—Maintained by SHeD.
- Exposure assessments.—Maintained by SHeD.
- Medgate database—Maintained by SHeD team, as appropriate.
- Medical examinations.—Maintained by Medical Services.
- Chemical inventory.—Maintained by SHeD.

8.0 REFERENCES

Document Number	Document Name
29 CFR 1910.132(d)(1)&(2) 29 CFR 1910.1000 (Z Tables) 29 CFR 1926, Subpart Z	Occupational Safety and Health Administration (OSHA) Standard for General Industry and Construction, as appropriate http://www.osha.gov/ (Hazard Assessment/PPE Requirements, Z-Tables and limits, other sections)
29 CFR 1910.1200 29 CFR 1926.59	OSHA Hazard Communication Standard for General Industry and Construction, as appropriate
GLM–QSA–1700.1	NASA Glenn Safety Manual, Chapter **33**, Job Hazard Analysis
NPR 1800.1B/4.1–4.3	NASA Procedural Requirement, "NASA Occupational Health Program Procedures"
C–82	Job Hazard Analysis Form
C-237	PPE Hazard Analysis and Assessment Form

APPENDIX A.—DEFINITIONS AND ACRONYMS

8-hr TWA.—Time-weighted average concentration to which an employee is exposed over an 8-hr day.

American Conference of Governmental Industrial Hygienists (ACGIH).—Professional society made up of Government employed IHs as well as IHs from the private sector. The ACGIH is devoted to administrative and technical aspects of occupational and environmental health.

American Industrial Hygiene Association (AIHA)

Carcinogen.—A substance or agent capable of causing or producing cancer in mammals, including humans. A chemical is considered to be a carcinogen or potential carcinogen if (a) it has been evaluated by the International Agency for Research on Cancer (IARC) and found to be a carcinogen or potential carcinogen, (b) it is listed as a carcinogen or potential carcinogen in the annual report on carcinogens published by the National Toxicology Program (NTP), or (c) it is regulated by the National Institute for Occupational Safety and Health (NIOSH) or Occupational Safety and Health Administration (OSHA) as a carcinogen.

Disposal.—Final placement for destruction of toxic, radioactive, or other wastes, surplus or banned pesticides or other chemicals, polluted soils, and drums containing hazardous materials from remedial actions or accidental releases. Disposal may be accomplished through use of approved secure landfills, surface impoundments, land farming, incineration, etc.

Engineering controls.—Designing out the hazard by process changes, substitution of harmful materials, isolation, ventilation, and source modification.

Glenn Research Center (GRC)

Hazard analysis (HA)

Hazard Communication (HazCom)

Hazard and Exposure Assessment (HEA)

Health and safety plan (HASP)

Industrial hygienist (IH)

Job hazard analysis (JHA)

Material Safety Data Sheet (MSDS)

National Institute for Occupational Safety and Health (NIOSH)

National Toxicology Program (NTP)

Occupational exposure limit (OEL).—A health-based workplace standard to protect workers from adverse exposure.

Occupational Health Programs Manual (OHPM)

Occupational Safety and Health Administration (OSHA)

Operations (Ops)

Permissible exposure limit (PEL).—The occupational exposure limit established by the Occupational Safety and Health Administration (OSHA); the permissible concentration in air of a substance to which nearly all workers may be repeatedly exposed 8 hr a day, 40 hr a week, for 30 yr without adverse effects.

Personal protective equipment (PPE)

Plum Brook Station (PBS)

Recommended exposure limit (REL).—The recommended exposure limit for a substance in air established and published by the National Institute for Occupational Safety and Health (NIOSH).

Standard operating procedure (SOP).—A written document that details an operation, analysis, or action whose mechanisms are thoroughly prescribed and that is commonly accepted as a method for performing certain routine or repetitive tasks.

Support service contractor (SSC)

Threshold limit value (TLV).—Established by the American Conference of Governmental Industrial Hygienist (ACGIH) to designate degree of exposure to contaminants at an exposure level under which it is believed most people can work consistently for 8 hr a day, day after day, with no harmful effects.

Threshold limit value—time-weighted average (TLV–TWA).—The time-weighted average concentration for a normal 8-hr workday and a 40-hr workweek to which nearly all workers may be exposed repeatedly, day after day, without adverse effects.

Threshold limit value—ceiling (TLV–C).—The concentration of a contaminant that should not be exceeded at any time.

Threshold limit value—short-term exposure limit (TLV–STEL).—A 15-min time-weighted average (TWA) exposure that is not to be exceeded at any time during a workday even if the 8-hr TWA is within the TLV–TWA. Exposures above the TLV–TWA up to the STEL should not be longer than 15 min, shall not occur more than 4 times per day, and there should be at least 60 min between successive exposures in this range.

Time-weighted average exposure.—Average concentration of an agent over a given working period of a person's exposure, as determined by sampling.

Workplace environmental exposure limit (WEEL)

Contents

1.0 PURPOSE....2
2.0 APPLICABILITY....2
3.0 BACKGROUND....2
4.0 POLICY....2
5.0 RESPONSIBILITIES....3
5.1 SHeD Reproductive and Developmental Hazards Program Lead....3
5.2 Radiation Safety Officer....3
5.3 Medical Director, Occupational Medicine Services....3
5.4 Supervisors....4
5.5 Employees....4
5.6 Chief, Office of Human Capital Management....5
5.7 Chief, Human Capital Development Branch....5
5.8 Chief, Office of Equal Opportunity Programs....5
5.9 Chief, Safety and Health Division....5
5.10 Contracting Officers and Contracting Officer Technical Representatives....5
6.0 REQUIREMENTS....5
6.1 Evaluation (*NASA Procedural Requirements (NPR) 1800.1, Section 4.5.4.1a*)....5
6.2 Training (*NASA NPR 1800.1, Section 4.5.4.1c-e*)....6
6.3 Medical Surveillance *(NASA NPR 1800.1)*....6
6.4 Control Measures (*NASA NPR 1800.1, Section 4.5.4.2*)....6
6.4.1 Exposure Issues....7
7.0 RECORDS....7
8.0 REFERENCES....7
APPENDIX A .—DEFINITIONS AND ACRONYMS....9

Chapter 22—Reproductive and Developmental Hazards

NOTE: *The current version of this chapter is maintained and approved by the Safety and Health Division (SHeD). The last revision date of this chapter was April 2012. The current version is located on the Glenn Research Center intranet at http://smad-ext.grc.nasa.gov/shed/pub/ohpm/ohpm-manual.pdf. Approved by Chief of Safety and Health Division.*

1.0 PURPOSE

The NASA Glenn Research Center (GRC) strives to provide employees with a safe and healthful work environment. The purpose of reproductive and developmental health protection is (1) to protect the reproductive health of all employees, students, and visitors from occupational exposures to substances (chemical, biological, radiological, or physical) known or suspected of being able to pose a hazard to human reproduction and (2) to identify potential reproductive and developmental hazards and implement appropriate exposure control measures. This includes protection of the unborn.

2.0 APPLICABILITY

This chapter applies to all civil servants, support service contract employees, construction contract employees, students, and others assigned to or performing projects at GRC sites and to any NASA-controlled, Government-owned facilities associated with GRC. This program provides assistance to staff and supervisors when dealing with questions related to reproductive health and work at GRC. These guidelines provide the necessary information and direction to assist concerned employees and their supervisors so that options are understood and informed decisions can be made by the employee. The guidelines were developed to provide additional protection for embryos and fetuses and to establish specific procedures to protect employees' reproductive systems. Control of employee exposures shall be carried out without economic penalty or loss of job opportunity, including, if necessary, consideration for work assignment changes, consistent with NASA Human Resources policies. Assuring protection from exposures to reproductive hazards requires full cooperation with these procedures as soon as pregnancy is contemplated or determined.

3.0 BACKGROUND

Through the course of work at GRC, employees may work with agents known or suspected to be hazardous to human reproduction. These agents include radiation, chemicals, biological agents, and physical hazards, as well as many other factors such as standing, climbing, heat or cold exposure, and others). Since risk factors are encountered both at work and home, a review by the concerned employee's personal physician is recommended so that a complete picture can be obtained. Consultation is also available through the NASA Safety, Health and Environmental Division (SHED) and the physicians associated with GRC's occupational medicine program.

In addition, there has been increased emphasis on child health as part of Public Law 106–310, Children's Health Act of 2000, which authorized the National Children's Study. Cuyahoga and Lorain are the two counties in Ohio that were chosen to be included in the study, which is expected to consider prenatal exposures to toxics such as lead.

4.0 POLICY

It is GRC's policy to comply with all applicable Occupational Safety and Health Administration (OSHA) permissible exposure limits, threshold limit values recommended by the American Conference of Governmental Industrial Hygienists, and NASA occupational exposure limits. However, because short-term exposures to reproductive and developmental hazards can result in long-term health effects and because a developing embryo or fetus may be adversely affected by exposures lower than those generally considered to be safe for adults, GRC's goal is to keep exposures as low as reasonably achievable, that is, below published regulatory and recommended limits. It is GRC's policy to control exposures by utilizing engineering and administrative controls when feasible. When these controls do not completely eliminate the hazard, personal protective equipment (PPE) shall be used. If PPE cannot be used safely and effectively, use of the material shall be denied.

It is also GRC's policy to provide safe and private lactation/nursing rooms for nursing mothers to use. They will be either permanent or temporary and strategically located across the Center. The GRC Space Management Committee should be contacted for additional information and locations of these facilities.

5.0 RESPONSIBILITIES

All of the following groups are responsible for maximizing employee privacy when implementing the various elements of this program and for becoming familiar with the requirements of the Privacy Act.

5.1 SHeD Reproductive and Developmental Hazards Program Lead

- The SHeD Program Lead shall develop, implement and administer the GRC Reproductive and Developmental Hazards Program. In addition, the Program Lead shall perform workplace hazard assessments, along with supervisory personnel, to determine where potential chemical, biological, or physical reproductive and developmental hazards exist, including
  - Identifying if these potential hazards present an exposure risk
  - Conducting a qualitative exposure assessment of concerned employees
  - Reviewing work practices and PPE, and recommending additional controls, if needed
  - Reviewing past occupational health reports and historical sampling results, if available
- Assist with the development of the laboratory standard operating procedures (LSOPs) and reviewing them
- Review work activities/operations and recommend, as appropriate, methods to minimize employee exposure to chemicals, recommend engineering controls and administrative controls, and PPE where exposure could reasonably exceed half of the OSHA permissible exposure limits the American Conference of Governmental Industrial Hygienists threshold limit values, or NASA occupational exposure limits
- Provide training on chemical, physical, and biological reproductive and developmental hazards in the work area, including the proper use of PPE and safety devices, the use of engineering controls, and other methods of decreasing exposure
- Counsel employees, in conjunction with Medical Services or their medical provider, as appropriate; being knowledgeable in reproductive health hazard toxicology, legal guidelines, and counseling guidelines
- Protect the privacy of the employee
- Provide technical information and resources to employees and Medical Services

5.2 Radiation Safety Officer

The radiation safety officer (RSO) shall :

- Provide specific radiation safety training including information on declaration of pregnancy for radiological issues
- Implement measures (for declared pregnancies) to achieve the lower exposure limit (0.5 roentgen equivalent in man (rem) to an embryo/fetus during an entire gestation period) and conduct dose monitoring

See the Occupational Health Programs Manual (OHPM), Chapters **8** and **9**, for more information.

5.3 Medical Director, Occupational Medicine Services

The Medical Director shall:

- Counsel employees, as appropriate; performing medical surveillance, as needed; or assist with referrals for medical counseling
- Obtain a written statement from the physician managing the pregnancy indicating whether or not the employee may continue working and listing any specific limitations, if any
- Depending on the nature of a potential hazard, refer employees to the appropriate specialist (e.g., health physicist, industrial hygienist, or ergonomic evaluator) for evaluation
- Manage the written declaration of pregnancies for workers exposed to radiological hazards or consulting with the employee's outside medical service provider

- Maintain complete, accurate records of all medical examinations conducted in house for employees in the medical surveillance program (Records shall be retained for 30 years plus employment. Results of examinations shall be discussed with employees as needed.)
- Review the following information with the assistance of an industrial hygienist or the RSO, as appropriate, during counseling:
  - Exposure potential
  - Recommended work practices and PPE to minimize the risk of exposure
  - Risks to reproductive health, the fetus, and breast milk
  - Material safety data sheets for materials handled by the employee
  - Occupational exposure limits
  - Available toxicity data for the chemicals being used or handled
- Identify examination elements following an exposure incident and sharing that information with other medical providers providing services to exposed employees

Protect the privacy of employees

> ***NOTE****: Support service contractors may, or, may not utilize the Center's Occupational Medicine Services. For such services rendered outside the Center, the employer of the individual shall maintain any relevant documentation regarding PPE medical clearance.*

5.4 Supervisors

Supervisors shall:

- Include all known reproductive hazards in written job descriptions
- Provide all prospective job candidates with a copy of the written job description
- Assess the potential reproductive hazards of employees' jobs
- Provide specific operations training
- Protect the privacy of employees
- Send employees to required initial and refresher health and safety training
- Provide employees with appropriate PPE
- Ensure employees use recommended PPE and other control measures provided
- Identify alternative job duties or temporary reassignments when required or, if alternative job duties are not available, counsel employees about leave options
- Notifying the SHeD Program Lead about any significant changes in the work environment of pregnant employees

5.5 Employees

Employees shall:

- Voluntarily declare their actual, suspected, or planned pregnancy to their supervisor in writing (Employees with potential exposure to ionizing radiation are encouraged to declare their pregnancy to their supervisor and the SHeD RSO. If an employee declares her pregnancy status to a SHED representative, it shall also be in written form and the employee's supervisor shall be informed.)
- Consider contacting Medical Services or their own or their employer's medical provider to seek a referral for reproductive health counseling
- Request a workplace hazard assessment from the SHeD Industrial Hygienist

- Follow all recommended work practices and wearing appropriate PPE
- Report all exposure incidents to their supervisors
- Attend required initial and annual training

Employees, both male and female, who are sexually active, planning a pregnancy, or pregnant should recognize the need for safe work practices at all times since certain reproductive effects occur at very early stages of pregnancy, perhaps prior to knowing about the pregnancy.

5.6 Chief, Office of Human Capital Management

The Chief of the Human Capital Management Office shall:

- Serve as a facilitator or consultant to the employee's supervisor regarding alternative duties, sick leave, or family leave
- Ensure that alternative job duties are considered when indicated by medical opinion, designate a person responsible for arranging reasonable accommodations, if available, and designate the person responsible for counseling the employee about other options, including sick leave and family leave, when a reasonable accommodation is not available

5.7 Chief, Human Capital Development Branch

The Human Capital Development Division Chief shall maintain records of employee completion of NASA-sponsored training courses and any associated examinations.

> ***NOTE****: Support service contractors are responsible for maintaining their own training records in accordance with their individual contracts with NASA.*

5.8 Chief, Office of Equal Opportunity Programs

The Office of Equal Opportunity Programs Division Chief shall provide consultation regarding potential Americans with Disabilities Act requirements.

5.9 Chief, Safety and Health Division

The SHeD Chief provides support to the industrial hygienists in the performance of their duties and maintains the records and documentation provided by the industrial hygienists.

5.10 Contracting Officers and Contracting Officer Technical Representatives

Contracting officers and contracting officer's technical representatives shall be knowledgeable about the Reproductive and Developmental Hazards Program requirements and ensure that their employees comply with the requirements.

6.0 REQUIREMENTS

6.1 Evaluation (*NASA Procedural Requirements (NPR) 1800.1, Section 4.5.4.1a*)

Areas where potential chemical, biological, or physical reproductive hazards exist shall be evaluated to determine the potential for exposure. Where such hazards are found, recommendations to reduce workplace exposures using engineering controls, PPE, job rotation, or other means shall be provided.

6.1 The SHeD verification procedure to ensure compliance with the requirements listed in this section shall be accomplished by reviewing applicable hazard assessments for those declaring pregnancy and where reproductive and developmental hazardous materials are used.

6.2 Training (*NASA NPR 1800.1, Section 4.5.4.1c-e*)

All employees with the potential for occupational exposure to chemicals, biohazardous materials, or ionizing radiation shall complete the required initial and annual refresher health and safety training. Requirements are based on the employee's potential exposures and may include the following:

- Introduction to Laboratory Safety (Chemical Hygiene Plan review and training)
- Introduction to Occupational Exposure to Bloodborne Pathogens
- Initial Radiation Safety Training
- Laboratory Safety Annual Update
- Bloodborne Pathogens Annual Update
- Radiation Worker Biennial Training
- Human Immunodeficiency Virus (HIV)/Hepatitis B Virus (HBV) Training
- Hazard Communication Training
- Ergonomics Training

Training shall include

- Methods to identify reproductive and developmental hazards in the workplace
- Safe work practices and PPE
- Availability of the Reproductive and Development Health Program

Known reproductive hazards specific to a work area shall be included in the written job description. Supervisors shall provide individual operational training.

6.2 The SHeD verification procedure to ensure compliance with the requirements listed in this section shall be accomplished by reviewing SATERN records or other personal training records as required. Training can also be verified through Facility inspections, reviewing JHA and PPE hazard assessment and training records, and LSOPs.

6.3 Medical Surveillance *(NASA NPR 1800.1)*

Medical surveillance requirements are based on the specific chemical or physical hazard present and the degree of potential exposure. The content of medical exams shall be determined by a physician with input from the RSO or industrial hygienist, as appropriate, according to NASA occupational health guidelines developed for chemical and physical exposure hazards.

Employees working with reproductive health hazards shall undergo an occupational health consultation, if pregnant, as well as an examination, if deemed appropriate by the physician.

6.3 The SHeD verification procedure to ensure compliance with the requirements listed in this section shall be accomplished by discussing whether the consultation took place with the physician or occupational health professional.

6.4 Control Measures (*NASA NPR 1800.1, Section 4.5.4.2*)

The mental development and behavior of infants and children can be affected by their mothers' exposure to harmful substances during pregnancy. Behavioral effects include hyperactivity, decreased attention span, slow learning ability, and in severe cases, mental retardation. Such "neurobehavioral defects" can accompany physical defects and are often not apparent at the time of birth. Some possible effects could be temporary (e.g., hyperactivity), whereas others could be permanent (e.g., mental retardation). Exposure to toxic substances before birth is only one of many factors that can affect the development and behavior of a child.

Developmental disorders are difficult to measure and have not been studied very extensively. Consequently, only a few drugs and even fewer industrial chemicals that cause neurobehavioral defects have been identified. Developmental disorders have been associated with maternal exposures to radiation, lead, carbon monoxide, polychlorinated biphenyls (PCBs), and organic mercury compounds. Even though OSHA has established exposure limits for hazardous materials and physical agents, a developing embryo or fetus may be adversely affected by lower doses than those considered to be safe for adults. Only a small percentage of chemicals, biological agents, or physical agents have occupational exposure limits based on adverse reproductive effects. For this reason, a review of workplace exposure conditions shall be required for those with a declared pregnancy or who are otherwise concerned.

6.4.1 Exposure Issues

Since the majority of published exposure limits, such as OSHA permissible exposure limits, are not based on adverse reproductive health effects and do not apply to pregnant employees, it is important to keep exposures as low as reasonably achievable. This is necessary to minimize the potential for reproductive or developmental adverse effects and to prevent exposure to newborns via breast milk from nursing mothers.

Should exposure monitoring for radiation, chemicals, and physical factors of concern be conducted, the employee and principal investigator or supervisor shall receive a copy of the monitoring results.

6.4.1.1 Radiation (*NASA NPR 1800.1, Section 4.13-4.15*)

SHeD provides radiation monitoring of employees through the RSO. Since only sealed sources and activated solid materials are used at GRC, the radiation worker shall be assigned a radiation badge when deemed appropriate by the RSO. Any other activities that could result in plausible internal exposure shall be evaluated by the RSO.

A radiation dose limit of 10 percent of the allowable limit for employees with declared pregnancy or planned pregnancy shall trigger an investigation by the RSO. Follow-up action shall be handled as described in Chapter **8** of the SHeD OHPM.

6.4.1.2 Chemical and Physical Hazards *(NASA NPR 1800.1, Section 4.5.4.2)*

As stated earlier, the goal is to control exposure to chemical and physical agents by keeping all exposures as low as reasonably achievable. The action taken in response to a measured exposure depends on the specific circumstances and agent involved. Corrective action to exposure results of concern may include the institution of additional engineering controls, improved work practices, PPE, or job rotation.

6.4 The SHeD verification procedure to ensure compliance with the requirements listed in this section shall be accomplished by a review of hazard and exposure assessments conducted in the workplace.

7.0 RECORDS

- Hazard assessments, exposure monitoring, and supporting documentation.—Maintained by the SHeD.
- NASA-sponsored training.—Maintained by Office of Development and Training of the Human Capital Development Branch.
- Medical exam records (in-house baseline and others).—Maintained by Occupational Medicine Services.

8.0 REFERENCES

Document number	Document name
NPR 1800.1C	NASA Procedural Requirement, NASA Occupational Health Program Procedures
OSHA	Reproductive Hazards, Hazard Recognition

29 Code of Federal Regulations (CFR) 1910.1450	Occupational Exposure to Hazardous Chemicals in Laboratories
National Institute for Occupational Safety and Health (NIOSH) No. 99–104	The Effects of Workplace Hazards on Female Reproductive Health
California Proposition 65	Chemicals Known to the State To Cause Cancer or Reproductive Toxicity
U.S. Nuclear Regulatory Commission	Regulatory Guide 8.13—Instructions Concerning Prenatal Radiation Exposure
Fair Labor Standards Act (FLSA)	2010 Patient Protection and Affordability Act, Section 4207
Public Law 106–310	Children's Health Act of 2000, which authorized the National Children's Study

APPENDIX A.—DEFINITIONS AND ACRONYMS

Code of Federal Regulations (CFR)

Developmental toxicity.—Adverse effects on the developing organism that may occur anytime from conception to sexual maturity. Effects may include spontaneous abortion, structural or functional defects, low birth weight, or effects that may appear later in life.

Embryo.—Multicellular diploid eukaryote in its earliest stage of development, from the time of first cell division until birth, hatching, or germination. A developing human is called an embryo until about 8 weeks after fertilization; from then on, it is called a fetus.

Fetus.—Developing mammal or other viviparous vertebrate after the embryonic stage and before birth. In humans, the fetal stage of prenatal development starts at the 9th week after fertilization.

Hepatitis B virus (HBV)

Human immunodeficiency virus (HIV)

Laboratory Standard Operating Procedure (LSOP)

Mutagen.—Something capable of causing a gene change. Among the known mutagens are radiation, certain chemicals, and some viruses.

NASA Glenn Research Center (GRC)

NASA Procedural Requirement (NPR)

National Aeronautics and Space Administration (NASA)

National Institute for Occupational Safety and Health (NIOSH)

Occupational Health Programs Manual (OHPM)

Occupational Safety and Health Administration (OSHA)

Permissible exposure limit.—Occupational exposure limits established by OSHA: the permissible concentration in air of a substance to which nearly all workers may be repeatedly exposed 8 hr per day, 40 hours per week, for 30 years without adverse effects.

Personal Protective Equipment (PPE)

Polychlorinated biphenyl (PCB)

Radiation Safety Officer (RSO)

Reproductive hazard.—Chemical, biological, radioactive, or physical agent that has the potential to adversely affect human reproductive capabilities including mutations, teratogenesis, miscarriage, sterility, developmental abnormalities, or transplacental carcinogenesis.

Reproductive toxicity.—Adverse effect on the health of the reproductive organs, endocrine system, or gametes (egg or sperm) from exposure to an exogenous agent that may result in effects such as menstrual dysfunction, impaired fertility, feminization, masculinization, or inability to maintain a pregnancy.

Safety and Mission Assurance Directorate (SMAD)

Safety and Health Division (SHeD)

Teratogen.—Any agent that can disturb the development of an embryo or fetus. A teratogen may cause a birth defect in a child or may halt the pregnancy outright. The classes of teratogens include radiation, maternal infections, chemicals, and drugs.

Threshold limit value.—Value established by the American Conference of Governmental Industrial Hygienists to designate a degree of exposure to a level under which it is believed most people can work consistently for 8 hr per day, day after day, with no harmful effects.

Toxin.—Agent that interrupts the normal function of a cell, tissue, organ, or organism.

Transplacental carcinogen.—Carcinogen that crosses the placenta and later causes cancer in the child or young adult.

Contents

1.0 PURPOSE....2
2.0 APPLICABILITY....2
3.0 BACKGROUND....2
4.0 POLICY....2
5.0 RESPONSIBILITIES....2
5.1 Safety and Health Division, Senior Industrial Hygienist (IH) shall:....2
5.2 Medical Director, Occupational Medical Services....2
5.3 Facilities Division shall....2
5.4 Researchers/Operations Personnel shall....3
5.5 Supervisors shall....3
6.0 REQUIREMENTS....3
6.1 Nanomaterials Usage Survey....3
6.2 Develop Standard Operating Procedure....3
6.3 Permissible Exposure Limits....3
6.4 Engineering Controls....4
6.5 Safe Work Practices....4
6.6 Safety Issues: Fire, Explosion, Catalytic Reactions....5
6.7 Spills....5
6.8 Disposal....5
6.9 Training....5
6.10 Recordkeeping....5
7.0 RECORDS....5
8.0 REFERENCES....5
APPENDIX A .—DEFINITIONS AND ACRONYMS....7
APPENDIX B .—NASA GRC NANOMATERIALS USAGE SURVEY....8

Chapter 23—Nanomaterials Health and Safety

NOTE: *The current version of this chapter is maintained and approved by the Safety and Health Division (SHeD). The last revision date of this chapter was February 2012. The current version is located on the Glenn Research Center intranet at http://smad-ext.grc.nasa.gov/shed/pub/ohpm/ohpm-manual.pdf. Approved by Chief of Safety and Health Division.*

1.0 PURPOSE

This chapter describes the interim NASA Glenn Research Center (GRC) Nanomaterials Program and establishes the minimum requirements to reduce the risk of occupational illness resulting from exposure to nanomaterials. To minimize exposure to as low as reasonably achievable for employees working with nanomaterials, priority will be given to the use of safe laboratory procedures and work practices, and engineering controls, such as source control, local exhaust ventilation, high-efficiency particulate air (HEPA) filtration, and personal protective equipment (PPE).

2.0 APPLICABILITY

The chapter is applicable to all personnel at GRC, including but not limited to civil servants, contractor personnel, tenants, and students who work with nanomaterials.

3.0 BACKGROUND

Nanotechnology and nanomaterials hold significant promise for technological advancements. Nanomaterials are important because they exhibit unique chemical and physical properties. Based upon current and ongoing research, it is surmised that the nanocharacteristics of size, shape, surface area, charge, chemical properties, solubility, and agglomeration may contribute to the interaction of these materials with biological systems. At this time, the human health impacts are not fully understood; however, the National Institute for Occupational Safety and Health (NIOSH) advises the use of precautionary measures. Health risks are based on how much and how long a person is exposed to a material, the toxicity of the material, the biopersistance of the material in the body, and individual characteristics of the person. The most common exposure route is via inhalation; nanomaterials may be deposited to a greater extent than larger particles in the lower portions of the respiratory tract. Ingestion is also considered a potential route of exposure and can be attributed to hand contamination with the subsequent transfer to the mouth. Some studies suggest that nanomaterials may enter the body via penetration through the skin, mucus membranes, and eyes. Once in the body, nanomaterials may translocate to other organs.

4.0 POLICY

It is GRC's policy to provide a safe and healthful workplace, which complies with NASA Headquarters, Federal, State, and local regulations and applicable national consensus standards. This policy will be achieved through compliance with Safety and Health Division (SHeD) programs and procedures.

5.0 RESPONSIBILITIES

All employees and their supervisors shall be cognizant of the Nanomaterials Health and Safety Program and conform to its requirements.

Specific responsibilities are as follows:

5.1 Safety and Health Division, Senior Industrial Hygienist (IH) shall:

- Administers, maintains, and exercises surveillance of this program, including but not limited to managing chemicals, assessing workareas, reviewing standard operating procedures (SOP), recommending controls, conducting sampling, and providing training and hazard assessment reports

5.2 Medical Director, Occupational Medical Services

- Provides medical evaluations and surveillance as required

5.3 Facilities Division shall

- Notifies the senior industrial hygienist of facility space utilization of nanomaterial use laboratories

- Considers control aspects in engineering design and ensures safe work practices for maintenance activities involving nanomaterial use laboratories and facilities
- Provides disposal recommendations and advice concerning pollution issues of The Toxic Substances Control Act (TSCA) and any issues related to related to, air, water, or soil.

5.4 Researchers/Operations Personnel shall

- Complete Nanomaterials Usage Survey GRC form C–235
- Develop written SOP that include an exposure control plan with site-specific safety practices for nanomaterials; include the plan in the chemical hygiene laboratory SOP or as an SOP in the safety permit process where applicable
- Attend required training
- Notify chemical management of new material usage for inventory updates
- Ensure that materials be used in accordance with the GRC Hazard Communication Policy
- See http://smad-ext.grc.nasa.gov/shed/pub/ohpm/ohpm20.pdf Label materials properly
- Create material safety data sheets MSDS for newly developed nanomaterials
- Maintain MSDS
- Use appropriate controls and follow PPE program procedures
- Ensure that materials be disposed of properly
- Assist FE with the development of a pre-manufacture notice to the Environmental Protection Agency (EPA) for any TSCA-defined “chemical substances” not on the TSCA inventory

5.5 Supervisors shall

- Identify employees and recommend employees for nanomaterial training
- Request nanomaterials hazard evaluations
- Enforce the use of engineering and administrative controls, including PPE

6.0 REQUIREMENTS

This document specifies the procedures to reduce and control exposure to nanomaterials. Copies of this program are maintained by SHED and are available online.

6.1 Nanomaterials Usage Survey

All GRC personnel currently engaged in research, manufacture, and operations involving nanomaterials shall complete the SHeD Nanomaterials Usage Survey form C-235, which is available from the GRC LTID C forms site. Submit the survey to the SHeD operations team at MS 6–4 for review.

6.2 Develop Standard Operating Procedure

Users shall develop a SOP with exposure control considerations for nanomaterial use as part of a safety permit. Users shall develop a laboratory SOP with exposure control considerations for nanomaterial use in a chemical laboratory. The senior IH of the operations team will review the SOP/LSOP and exposure controls, conduct a site visit, and make additional recommendations if needed.

6.3 Permissible Exposure Limits

There are very limited permissible exposure limits for engineered nanomaterials. Most of these limits are based on specific chemical constituents or on total dust calculated as a mass by volume, which may or may not be a suitable measure as indices of exposure. Limits will be reviewed prior to sampling for the specific type of nanomaterial under evaluation.

6.4 Engineering Controls

To the extent feasible, priority shall be given to reducing employee exposure by using engineering controls: local exhaust ventilation and enclosures such as glove boxes for activities involving nanomaterials; HEPA filtration of ventilation systems is most desirable.

6.5 Safe Work Practices

- Standard Operating Procedures and Exposure Control Considerations
    - The following are examples of tasks that nanomaterial users shallconsider for control (i.e., control against exposure via inhalation, ingestion, and penetration via the skin or eyes).
    - Handling liquids that contain nanomaterials: use appropriate gloves
    - Performing liquid operations that generate aerosols: use enclosures, local exhaust ventilation
    - Generating gas-phase aerosols: use enclosed systems
    - Handling powders: use enclosed or local exhaust ventilation systems
    - Performing maintenance tasks: inform maintenance of hazard on workorder, so that work procedure may be developed through the GRC Health and Safety Plan process
    - Cleaning dust collection systems: use an approved Health and Safety Plan
    - Machining, grinding, sanding products with nanomaterials: use enclosures, local exhaust ventilation
- Work involving nanomaterials shall be planned to control and prevent employee exposure and the contamination of work surfaces and equipment.
- Facility and equipment work surfaces shall be cleaned of contamination at the end of the task or shift by good housekeeping practices, including HEPA vacuuming and wet wiping.
    - Wet wipes will be bagged so as not to re-aerosolize products.
    - Dry sweeping is prohibited.
    - Compressed air hose for cleaning is prohibited.
    - Sticky mats may be used for areas outside nano material dry powder operations
- Personal protective equipment may be necessary and will include the following:
    - Gloves, chemical protective-type as appropriate for the specific material: always rinse off gloves once they are exposed to nanomaterials.
    - Laboratory coats, disposable lab coat or coverall as appropriate: contaminated disposable clothing shall be containerized and disposed of properly.
    - Safety eyewear, such as safety glasses with side shields, chemical goggles, and/or face shield as appropriate
    - Respiratory protection may be necessary: all respirator users shall conform to the requirements of the GRC Respiratory Protection Program. At a minimum, respirator filtration will provide HEPA capability. An elastomeric respirator properly fit tested is recommended as the best type. The IH will help to select the most appropriate type for the specific application. See http://smad-ext.grc.nasa.gov/shed/pub/ohpm/ohpm4-respir.pdf
- Dust collection systems should include HEPA filtration.
- Foods shall not be stored or consumed in areas where nanomaterials are handled.
- Hand washing is required before eating, drinking, smoking, and leaving work.

6.6 Safety Issues: Fire, Explosion, Catalytic Reactions

- Although not fully known, nanomaterials may pose a risk of fire, explosion, and/or catalytic reaction because of the surface area and their unique properties. Physical hazards must be considered prior to use of nanomaterials.

6.7 Spills

- Small-scale material spills shall be cleaned up by using the appropriate PPE. Approaches to cleaning up these spills include the use of HEPA-filtered vacuum cleaners, wetting powders complete with surfactant, wetted cloths, and the application of absorbent materials.
- Large-scale material spills shall be reported to security (9-1-1).

6.1-6.7 Verification processes -C-235 reviews and assessment reports, laboratory safety inspections and safety permit reviews.

6.8 Disposal

Contact FE Waste Management for the disposal of substance-specific nanomaterials.

6.9 Training

Employees working with nanomaterials shall be trained in the current health-based research, potential routes of exposure, safe work practices, sampling limitations and types, proper use of PPE, engineering controls, emergency response procedures for spills, and disposal recommendations.

Training is provided by SHED and through the System for Administration, Training, Educational Resources for NASA (SATERN).

6.9 Verification- SATERN records review, audits, self assessment

6.10 Recordkeeping

In accordance with the requirements of the 29 CFR 1910.20 Occupational Safety Health Administration (OSHA) Access to Employee Exposure and Medical Records, both medical and industrial hygiene records will be made available to affected employees or their representatives.

7.0 RECORDS

- NASA GRC Nanomaterials Usage Survey C–235, SOP
- Exposure assessments and reports
- Training records are maintained by HCDD

8.0 REFERENCES

Document number	Document name
National Institute for Occupational Safety and Health	Approaches to Safe Nanotechnology, 2009 http://www.cdc.gov/niosh/docs/2009-125/pdfs/2009-125.pdf
National Institute for Occupational Safety and Health	Progress Toward Safe Nanotechnology in the Workplace, 2010 http://www.cdc.gov/niosh/docs/2010-104/pdfs/2010-104.pdf
International Council on Nanotechnology	Review of Safety Practices in the Nanotechnology Industry, November 13, 2006 http://icon.rice.edu/projects.cfm?doc_id=4388

NASA Ames Research Center	Nanomaterials Safety and Health Guideline, http://server-mpo.arc.nasa.gov/Services/CDMSDocs/Centers/ARC/Dirs/APR/APR1700.1C50.html
Nanotoxicology Chapter 4.6	NASA NPR 1800.1C

APPENDIX A.—DEFINITIONS AND ACRONYMS

Agglomerate.—Group of particles held together by weak forces including van der Waals, electrostatic, and surface tension

Environmental Protection Agency (EPA)

Glenn Research Center (GRC)

High-efficiency particulate air filter (HEPA).—Filter that removes 0.3-µm-diameter particles with 99.97 percent or greater efficiency. The selection of the 0.3-um diameter as the standard challenge diameter is based on the fact that most particulate filters are least efficient at this diameter and more effectively remove particles that are both smaller and larger in diameter. NIOSH is reviewing HEPA efficiency for nanomaterials, and there is evidence that this may be effective at filtering nanosized materials.

Laboratory Standard Operating Procedure (LSOP)

Material safety data sheets (MSDS)

Nanomaterial.—Material defined as having at least one dimension in the range of 1 to 100 nanometers

National Institute for Occupational Safety and Health (NIOSH)

Occupational Safety Health Administration (OSHA)

Personal protective equipment (PPE)

Plum Brook Station (PBS)

Safety and Health Division (SHeD)

Senior industrial hygienist (IH)

Standard operating procedures (SOP)

System for Administration, Training, Educational Resources for NASA (SATERN)

Translocation.—Act, process, or instance of changing location or position

The Toxic Substances Control Act (TSCA)

APPENDIX B.—NASA GRC NANOMATERIALS USAGE SURVEY

Appendix 1

NASA GRC Nanomaterials Usage Survey

Researcher Name: _____ Survey Form Completion Date: _____

Org Code: _____ Phone: _____ Building: _____ Room: _____

Nanomaterials Use Location: _____ Lab Phone: _____ Building: _____ Room: _____

List other employees working with this material in the space:

_____

_____

Safety Permit # (If applicable): _____

Lab SOP# (If applicable): _____

Research Project Name: _____

List all nanomaterials used in this location.

Date	Material Used	Activity	MSDS Available Yes or No	Physical Form *Powder Solution Composite*

Questions:

1. Do you use a ventilation hood? _____ Hood ID#? _____ Glove box? _____
2. Do you use PPE? _____ Garment type: _____ Glove type: _____ Respirator: _____
   - If a respirator is worn, please specify type and cartridges:

   _____
3. Eyewear type: _____ Other: _____
4. If you identified solution in table above, please specify solvent type: _____
5. Are nanomaterials created in the lab? _____
6. Are nanomaterials purchased or provided by other site? Please specify: _____

NASA C-235 (Rev. 6-2008)

For each material, complete the following:

Material	Total Qty > 1 gram Yes or No	How often used per week, month, year	Time during use, Specify minutes or hours	#Employees

OHB - IH Internal

Review by: _____ Date: _____

Follow-up sampling recommended? _____ Type needed: _____

Other comments:

Return form via interoffice mail to Luz Jeziorowski at MS: 6-4

NASA C-235 (Rev. 6-2008)

Contents

1.0 PURPOSE....2
2.0 APPLICABILITY....2
3.0 BACKGROUND....2
4.0 POLICY....2
5.0 RESPONSIBILITIES....3
5.1 SHeD....3
5.2 Supervisors....4
5.3 Employees....4
5.4 Medical Director, Occupational Medicine Services....4
5.5 Human Capital Development Branch Chief....4
6.0 REQUIREMENTS....5
6.1 Hazard Assessment (*NASA NPR 1800.1)*....5
6.2 Training (*29 CFR 1910.1200 and Specific OSHA-Regulated Chemical Standards*)....5
6.3 Medical Surveillance (*29 CFR 1910; NASA NPR 1800.1*)....5
6.4 Control Measures for Use of OSHA-Regulated Materials (*Specific OSHA-Regulated Chemical Standards*)....6
6.5 Construction Use of OSHA-Regulated Materials *(29 CFR 1926)*....6
7.0 RECORDS....6
8.0 REFERENCES....7
APPENDIX A .—DEFINITIONS AND ACRONYMS....8
APPENDIX B .—OSHA-REGULATED MATERIALS AT GLENN RESEARCH CENTER (GRC)....10
APPENDIX C .—REGULATORY REQUIREMENTS....11

Chapter 24—OSHA-Regulated Materials

Note: *The current version of this chapter is maintained and approved by the Safety and Health Division (SHeD). The last revision date of this chapter was April 2012. The current version is located on the Glenn Research Center intranet at http://smad-ext.grc.nasa.gov/shed/pub/ohpm/ohpm-manual.pdf Approved by Chief of Safety and Health Division.*

1.0 PURPOSE

The purpose of the Occupational Safety and Health Administration (OSHA)-regulated materials compliance program is to protect employees who may be exposed to chemicals specifically regulated by OSHA from adverse health effects. These materials are covered under OSHA substance-specific standards (sometimes called the OSHA vertical standards) that generally include exposure monitoring, exposure limits, medical examination requirements, personal protective equipment (PPE), and information and training provisions. This program establishes minimum requirements for handling, use, and disposal of applicable OSHA-regulated materials used at NASA Glenn Research Center (GRC) including Lewis Field and Plum Brook Station.

2.0 APPLICABILITY

This chapter applies to all civil servant and support service contractor (SSC) employees assigned to GRC sites as well as construction contractors, students, and visitors. This document applies to the use of OSHA-regulated materials not covered by other Occupational Health Manual Programs chapters, such as asbestos and lead, and focuses on those OSHA-regulated materials used at NASA GRC.

SSCs and construction contractors are responsible for the health and safety of their employees and for hazard analyses, training, PPE, medical surveillance, and other requirements to ensure compliance with OSHA standards for the specific chemicals addressed in this chapter.

3.0 BACKGROUND

In 1970, OSHA adopted a list of exposure limits for various chemicals published in 1968 by the American Conference of Governmental Industrial Hygienists (ACGIH). This list was included in 1910.1000 and 1926.1100 in the Z Tables. Because some chemicals were highly toxic, including carcinogens, and/or specific to a particular industry, OSHA has promulgated compliance standards for a number of them. These substance- or industry-specific standards typically contain specific requirements for assessing and controlling exposures to employees. They may or may not require exposure monitoring of employees for each job classification potentially exposed, establishment of regulated areas with specific warning signs and handling procedures, mandatory engineering controls, specific work practices, respiratory protection, written programs, and written standard operating procedures. In addition, GRC may determine additional requirements based upon the chemical, its hazards, and the results of a hazard assessment and exposure monitoring.

The Safety, Health and Environmental Division (SHED) recognize that OSHA-regulated materials are generally used in small quantities and on an infrequent basis at NASA GRC. Therefore, to comply with the OSHA standards, SHeD has developed the following guidelines for current and future use of applicable OSHA-regulated materials.

4.0 POLICY

It is GRC's policy to comply with all applicable regulations regarding chemical use and to prevent illness to workers and damage to the environment from the use, removal, and disposal of chemicals. To accomplish this, all personnel shall comply with the requirements of this chapter.

It is also NASA's official policy to adhere to OSHA or the ACGIH occupational exposure limits (whichever is more restrictive) to ensure worker protection.

This chapter applies to all the OSHA-regulated materials that are either currently used or that will be used in the future at GRC. See Appendix B for those chemicals currently used at GRC.

Following is an alphabetical listing of OSHA-regulated materials covered under this program:

2-Acetylaminofluorene
Acrylonitrile
4-Aminodiphenyl
Arsenic, inorganic
Benzene
Benzidine
1,3-Butadiene
Cadmium
bis-Chloromethyl ether
Chromium VI (hexavalent chromium)
Coal tar pitch volatiles
Coke oven emissions
Cotton dust
1,2-dibromo-3-chloropropane
3,3-Dichlorobenzidine (and its salts)
4-Dimethylaminoazobenzene
Ethyleneimine
Ethylene oxide
Formaldehyde
Methyl chloromethyl ether
Methylene chloride
4,4-Methylenedianiline
alpha-Napthylamine
beta-Naphthylamine
4-Nitrobiphenyl
N-Nitrosodimethylamine
beta-Propiolactone
Vinyl chloride

This chapter does not cover OSHA-regulated materials specifically addressed in other dedicated chapters such as asbestos and lead.

5.0 RESPONSIBILITIES

5.1 SHeD

The SHeD Program Lead, along with support from Chemical Management and Waste Management as indicated, shall

- Provide guidance on the requirements of Federal, State, and local environmental regulations
- Maintain the chemical inventory
- Review chemical purchases to determine when OSHA-regulated materials or products containing OSHA-regulated materials are requested (Chemical Management)
- Solicit supervisor input to identify employees using OSHA-regulated materials
- Control and approve use of cadmium-containing brazing alloys (Chemical Management)
- Provide guidance for handling spill situations (See Occupational Health Programs Manual, Chapter **8** for details)
- Assist in the collection and disposal of regulated materials and waste products containing regulated materials
- Maintain the OSHA-Regulated Materials Program
- Reviews job hazard analyses (JHAs) or other equivalent hazard assessments and perform exposure assessments where indicated
- Recommend procedures to minimize exposure
- Recommend employees for inclusion in a medical surveillance program, if required
- Maintain the exposure database for all related operations
- Conduct Hazard Communication training (Chemical Management)
- Conduct any required training beyond that provided under the Hazard Communication Standard (Chemical Management)
- Collect and dispose of regulated waste (Waste Management)

5.2 Supervisors

Supervisors shall

- Identify those using regulated materials within the guidelines of this policy and notify the Program Lead of the user's name and material prior to its use
- Complete JHA or equivalent hazard assessment for tasks involving OSHA-regulated materials and forward a copy to the Program Lead
- Comply with the requirements and/or conditions set forth in applicable safety permits, standard operating procedures (SOPs), Laboratory SOPs (LSOPs), and JHAs
- Ensure regulated areas are properly marked and access restricted
- Ensure employees follow good work practices
- Ensure employees meet training requirements and have knowledge of the hazards

5.3 Employees

Employees shall

- Procure chemicals in compliance with the Occupational Health Programs Manual, Chapter **14**, Acquisition of Hazardous Chemicals and Materials
- Comply with the requirements and/or conditions set forth in applicable safety permits, SOPs, LSOPs, and JHAs
- Use the regulated materials in accordance with procedures established for safe use and storage of these materials
- Use PPE as specified in established work procedures or the hazard assessment(C-237, JHA, LSOP, etc.)
- Notify Medical Services or their medical provider and their supervisor if they experience any signs or symptoms of overexposure
- Notify their supervisors of any operational changes or new uses of the regulated materials
- Discard waste material through Waste Management
- Attend required training

5.4 Medical Director, Occupational Medicine Services

The Medical Director shall

- Maintain medical surveillance programs for civil servant andSSC, as applicable, exposed to regulated chemicals that require medical monitoring
- Maintain complete, accurate records of all medical examinations for personnel in the medical surveillance program. Records are to be retained for at least 30 years. Results of examinations are to be discussed with employees as needed. The Medical Director shall also identify examination elements following an exposure incident.

5.5 Human Capital Development Branch Chief

The Human Capital Development Division Chief shall

- Schedule employee training
- Maintain records for employees who completed NASA-sponsored training and any associated examinations

6.0 REQUIREMENTS

SHeD shall be kept apprised of OSHA-regulated material use throughout the laboratory with the assistance of the Chemical Management staff. SHeD shall also be kept apprised when uses of a regulated material changes or when new tasks, not previously assessed, require the use of a regulated material. This information shall be provided in a timely manner in order to arrange for hazard assessments and not delay the user's work.

6.1 Hazard Assessment (*NASA NPR 1800.1)*

All regulated materials currently in use at GRC shall have a hazard assessment performed by a SHeD IH. The user or area supervisor shall contact the Program Lead prior to use and arrange for an IH to observe the handling of the material, assess the hazards, and perform exposure monitoring, if necessary. The area supervisor shall be responsible for compliance with this requirement.

Results of the hazard assessments for all current users of a given material enable the IH to determine if a written program shall be established or revised. Written programs, if required, shall be included in this chapter as appendices.

A hazard assessment shall be required by an IH when

- An OSHA-regulated chemical is being requested for purchase
- A process which uses a regulated material changes
- A new task not previously assessed requires the use of a regulated material

Hazard assessments shall include

- A review of the JHA or equivalent hazard assessment for all tasks involving regulated materials
- A review of related standards to determine regulatory requirements
- A meeting with the requester to discuss usage, handling procedures, possible engineering controls, PPE, and scheduling of exposure monitoring

6.1 The SHeD verification procedure to ensure compliance with the requirements listed in this section, shall be accomplished by reviewing equivalent hazard assessments information.

6.2 Training (*29 CFR 1910.1200 and Specific OSHA-Regulated Chemical Standards*)

All employees using hazardous chemicals shall receive Hazard Communication training so they understand the information presented on an MSDS and know how to protect themselves from the hazards of the toxic material.

All employees using OSHA-regulated materials shall have specific training as required under the OSHA standard for the particular chemical being used or handled. The training shall cover the specific hazards of the material, requirements of the standard, and other information regarding controlling exposure. A test or other method is required to demonstrate those being trained have knowledge of the information provided.

6.2 The SHeD verification procedure to ensure compliance with the requirements listed in this section shall be accomplished by reviewing SATERN records or other personal training records as available. Training can also be verified through Facility inspections, reviewing JHA and PPE hazard assessment, training records, and SOPs/LSOPs.

6.3 Medical Surveillance (*29 CFR 1910; NASA NPR 1800.1*)

Individuals using or handling OSHA-regulated materials may be required to receive baseline and routine medical examinations of various organ systems depending upon the material used and the extent of and potential for "exposure."

Individuals requiring an exam as determined by the Program Lead, a SHeD, IH or their supervisor, shall contact Medical Services to receive directions on scheduling the examination. The content of the exam should be determined by the employer with assistance from a SHeD IH for regulatory requirements and Medical Services. For

those using another medical provider, they shall contact the Program Lead or a SHeD IH who will coordinate with Medical Services to provide minimum exam content requirements to that medical provider.

Any employee with a known or suspected excessive exposure shall contact GRC Medical Services or their medical provider immediately to arrange for a post-exposure exam. This exam shall include those items required by OSHA and any additional tests deemed necessary by the physician. Their supervisor shall also be contacted.

6.3 The SHeD verification procedure to ensure compliance with the requirements listed in this section shall be accomplished by reviewing medical surveillance program records to determine if those required to be in such programs are and have received the appropriate exams.

6.4 Control Measures for Use of OSHA-Regulated Materials (*Specific OSHA-Regulated Chemical Standards*)

Whenever possible, the use of OSHA-regulated materials shall be eliminated through the use of less hazardous or toxic materials. Where elimination is not feasible, engineering or administrative controls (if allowed under the standard) shall be implemented. When such controls do not completely eliminate the hazard or when they are not feasible personal protective equipment (PPE) shall be required. Personal protective equipment (PPE) may also be used when the task is infrequent or non-routine.

When working on eliminating or controlling the hazards of OSHA-regulated materials, those most knowledgeable about the work shall be involved either through consultation or direct participation.

All provisions of the applicable standard for each regulated material apply when exposures exceed or are likely to exceed the maximum allowable 8-hr time-weighted average (TWA) OSHA permissible exposure limit (PEL), or recommended ACGIH threshold limit value (TLV), whichever is most restrictive, or the short-term exposure limit (STEL). These provisions typically include establishing regulated areas, hygiene facilities, compliance plans, controls, protective clothing, the use of proper work practices, training, posting of warning signs, etc., and are specific to the material regulated. See Appendix B for a summary of the specific requirements.

6.4 The SHeD verification procedure to ensure compliance with the requirements listed in this section shall be accomplished by reviewing hazard and exposure assessment data, JHAs, LSOPs, SOPs, safety permits and any other documents related to work with OSHA-regulated chemicals as well as a walk-through of workplaces where such chemicals are used or handled.

6.5 Construction Use of OSHA-Regulated Materials *(29 CFR 1926)*

In general, the use of OSHA-regulated materials listed in this chapter shall be prohibited unless proper controls are used and protective equipment worn. If such materials are required for a particular construction task, the materials shall be listed in the health and safety plan (HASP). The SHeD staff members charged with reviewing and approving HASPs shall approve or deny the use of OSHA-regulated materials covered under this chapter on behalf of the Program Lead and shall be knowledgeable on the OSHA-regulated materials and special conditions that apply. Each construction contractor or subcontractor is responsible for assessing hazards to their employees, complying with the requirements of the standard including, but not limited to, providing exposure monitoring, training, medical surveillance, written compliance programs, PPE, warning signs, etc.

6.5 The SHeD verification procedure to ensure compliance with the requirements listed in this section shall be accomplished by reviewing health and safety plans.

7.0 RECORDS

- Job hazard analyses.—Maintained by SHeD.
- Hazard assessments.—Maintained by applicable organization
- Exposure assessments—Maintained by SHeD

- LSOPs and safety permits. – Maintained by SHeD
- Exposure assessment database.—Maintained by SHeD
- Medical examinations.—Maintained by SHeD Medical Services.
- Chemical inventory.—Maintained by SHeD

8.0 REFERENCES

Document Number	Document Name
29 CFR 1910.1002–18; 1026–1028; 1044–1052	Occupational Safety and Health Administration, General Industry Standards, http://www.osha.gov/
29 CFR1926.60; 1102–1118; 1127–1129; 1144–1148; 1152	Occupational Safety and Health Administration, Construction Industry Standards http://www.osha.gov/
GLM–QSA–1700.1	NASA Glenn Safety Manual, Chapter **33**, Job Hazard Analysis
NPR 1800.1	NASA Procedural Requirement, "NASA Occupational Health Program Procedures"

APPENDIX A.—DEFINITIONS AND ACRONYMS

8-hour TWA.—Time-weighted average concentration to which an employee is exposed over an 8-hr day.

Action level (AL).—This is the concentration or level of an agent at which it is deemed that some specific action should be taken. The action can range from monitoring the exposure on a routine basis to making engineering adjustments. In general the action level is set at one-half of the adopted occupational exposure limit.

American Conference of Governmental Industrial Hygienists (ACGIH).—Professional society made up of government-employed industrial hygienists as well as industrial hygienists from the private sector. The ACGIH is devoted to administrative and technical aspects of occupational and environmental health.

Carcinogen.—A substance or agent capable of causing or producing cancer in mammals, including humans. A chemical is considered to be a carcinogen or potential carcinogen if (a) it has been evaluated by the International Agency for Research on Cancer (IARC) and found to be a carcinogen or potential carcinogen, (b) it is listed as a carcinogen or potential carcinogen in the annual report on carcinogens published by the National Toxicology Program (NTP), or (c) it is regulated by the National Institute of Occupational Safety and Health (NIOSH) or Occupational Safety and Health Administration as a carcinogen.

Code of Federal Regulations (CFR)

Disposal.—Final placement for destruction of toxic, radioactive or other wastes, surplus or banned pesticides or other chemicals, polluted soils, and drums containing hazardous materials from remedial actions or accidental releases. Disposal may be accomplished through use of approved secure landfills, surface impoundments, land farming, incineration, etc.

Engineering controls.—Designing out the hazard by process changes, substitution of harmful materials, isolation, ventilation, and source modification.

Glenn Research Center (GRC)

Health and Safety Plan (HASP)

International Agency for Research on Cancer (IARC)

Industrial hygienist (IH)

Job hazard analysis (JHA)

Material Safety Data Sheet (MSDS)

National Institute of Occupational Safety and Health (NIOSH)

National Toxicology Program (NTP)

NASA Procedural Requirement (NPR)

Occupational exposure limit (OEL)

Occupational Safety and Health Administration (OSHA)

Permissible exposure limit (PEL).—The occupational exposure limit (OEL) established by Occupational Safety and Health Administration; the permissible concentration in air of a substance to which nearly all workers may be repeatedly exposed 8 hr a day, 40 hr a week, for 30 yr without adverse effects.

Personal protective equipment (PPE)

Plum Brook Station (PBS)

Safety and Health Division (SHeD)

Sensitizer.—A material that is capable of causing an immune response in an individual. In most cases, initial exposure results in a normal response, but repeated exposures lead to progressively strong and abnormal responses.

Short-term exposure limit (STEL)

Skin notation.—Denotes the possibility that dermal absorption may be a significant contribution to the overall body burden of the chemical (i.e., the airborne occupational exposure limit may not be adequate to protect the worker

because the compound also readily penetrates the skin. Other reactions to the skin such as irritation, dermatitis, and sensitization are not sufficient to warrant the skin notation.

Standard operating procedure (SOP).—A written document that details an operation, analysis, or action whose mechanisms are thoroughly prescribed and that is commonly accepted as a method for performing certain routine or repetitive tasks.

Support service contractor (SSC)

Threshold limit value (TLV).—Established by the American Conference of Governmental Industrial Hygienists to designate degree of exposure to an exposure level under which it is believed most people can work consistently for 8 hr a day, day after day, with no harmful effects.

Threshold limit value—ceiling (TLV–C).—The concentration of a contaminant that should not be exceeded at any time.

Threshold limit value—short-term exposure limit (TLV–STEL).—A 15-min TWA exposure that is not to be exceeded at any time during a workday even if the 8-hr TWA is within the TLV–TWA. Exposures above the TLV–TWA up to the STEL should not be longer than 15 min and shall not occur more than 4 times per day; there should be at least 60 min between successive exposures in this range.

Time-weighted average exposure.—Average concentration of an agent over a given working period of a person's exposure, as determined by sampling.

Toxic effect.—Harmful or poisonous effect of a chemical agent.

Toxin.—A poisonous substance.

APPENDIX B.—OSHA-REGULATED MATERIALS AT GLENN RESEARCH CENTER (GRC)

Currently Used

Following is a list of OSHA-regulated materials believed to currently be used at GRC.

- Benzene
- Cadmium
- Formaldehyde
- Inorganic arsenic
- 4,4-Methylenedianiline
- Methylene chloride
- Chromium VI (typically found in stainless steel; exposure issues when welding)

Specific requirements for the handling and use of these materials can be found in Appendix C of this document. If you are no longer using and will not be using any of these materials in the future, contact the SHeD Program Lead (IH so the list can be updated.

Currently NOT Used

Following is a list of OSHA-regulated materials not currently used or found at GRC. If you are currently using or know of someone currently using any of these materials, SHeD Program Lead IH shall be notified.

- 2-Acetylaminofluorene
- Acrylonitrile
- 4-Aminodiphenyl
- Benzidine
- 1,3-Butadiene
- bis-Chloromethyl ether
- Coal tar pitch volatiles
- Coke oven emissions
- Cotton dust
- 1,2,-dibromo-3-chloropropane
- 3,3–Dichlorobenzidine (and its salts)
- 4-Dimethylaminoazobenzene
- Ethyleneimine
- Ethylene oxide
- Methyl chloromethyl ether
- alpha-Napthylamine
- beta-Naphthylamine
- 4-Nitrobiphenyl
- N-Nitrosodimethylamine
- beta-Propiolactone
- Vinyl chloride

APPENDIX C.—REGULATORY REQUIREMENTS

Requirements	ARSENIC, INORGANIC	BENZENE
PEL//AL	10 ug/m^3// 5 ug/m^3 8-hr. TWA	1 ppm//0.5 ppm 8-hr. TWA, 5 ppm STEL; **NASA = 0.5 ppm TWA, 2.5 ppm STEL (skin)**
Monitoring	<AL = none >AL but <PEL = 6 mo >PEL = 3 mo (until 2 consecutive results 7 days apart <AL) or when process changes	<AL & STEL = none >AL but <PEL = annually >PEL = 6 mo (until 2 consecutive results 7 days apart <AL) Spills, ruptures, changes
Notification, no. of working days	15	15
Regulated area	>PEL, signs required	>PEL, signs required
Compliance methods	Engineering, local exhaust PPE Good handling and housekeeping	Engineering, local exhaust PPE Good handling and housekeeping
Compliance program	>PEL, written plan	>PEL, written plan
Respirators	Interim control	Interim control
Medical surveillance	>AL 30 days or more/yr (are or will be) >AL 30 days or more/yr previously for 10 yrs.	≥AL 30 days or more/yr ≥PEL 10 days or more/yr >10 ppm 30 days or more/yr in a prior yr
Medical removal	Not specified	If medically required, full protection
Signs	DANGER INORGANIC ARSENIC, CANCER HAZARD AUTHORIZED PERSONNEL ONLY NO SMOKING OR EATING RESPIRATOR REQUIRED	DANGER BENZENE CANCER HAZARD FLAMMABLE - NO SMOKING AUTHORIZED PERSONNEL ONLY
Labels	DANGER CONTAINS INORGANIC ARSENIC CANCER HAZARD HARMFUL IF INHALED OR SWALLOWED USE ONLY WITH ADEQUATE VENTILATION OR RESPIRATORY PROTECTION	DANGER CONTAINS BENZENE CANCER HAZARD
MSDS	Provide	Provide
Information and training	Initial and annually if >AL	Initial and annually if >AL
Recordkeeping		
Exposure	Exposure monitoring, MSDS, PPE	30 yr including all pertinent data
Medical	All medical (the longer of 40 yr or employment + 20 yr) and laboratory techniques	30 yr + employment
Transfer of records	To Director of OSHA if no receiver	To Director of OSHA if no successor
Observation of monitoring	Affected employee or their representative; PPE to be provided	Affected employee or their representative; PPE to be provided
Comments		

Requirements	CADMIUM	FORMALDEHYDE
PEL//AL	5 ug/m^3// 2.5 ug/m^3 **NASA = 2.0 ug/m^3, respirable**	0.75 ppm//0.5 ppm; 2 ppm STEL **NASA = 0.3 ppm (ceiling) (sensitizer)**
Monitoring	<AL = none >AL but <PEL = annually >PEL = 6 mo (until 2 consecutive results 7 days apart <AL)	<AL and STEL = none ≥AL = 6 mo ≥STEL = annually (until 2 consecutive results 7 days apart <AL and STEL) When process changes
Notification, no. of working days	15	15
Regulated area	>PEL, signs required	>PEL, signs required
Compliance methods	Engineering, local exhaust PPE Good handling and housekeeping	Engineering, local exhaust PPE Good handling and housekeeping Eyewash and safety showers if >0.1% formaldehyde
Compliance program	>PEL, written plan	>PEL, written plan
Respirators	Interim control	Interim control
Medical surveillance	≥AL 30 days or more/yr Previously exposed for ≥60 mo	≥AL or STEL or NASA ceiling limit Emergencies Those with signs and symptoms
Medical removal	If medically required, full protection	Not specified
Signs	DANGER CADMIUM CANCER HAZARD CAN CAUSE LUNG AND KIDNEY DISEASE AUTHORIZED PERSONNEL ONLY RESPIRATORS MAY BE REQUIRED IN THIS AREA	DANGER FORMALDEHYDE IRRITANT AND POTENTIAL CANCER HAZARD AUTHORIZED PERSONNEL ONLY
Labels	DANGER CONTAINS CADMIUM CANCER HAZARD AVOID CREATING DUST CAN CAUSE LUNG AND KIDNEY DISEASE	DANGER FORMALDEHYDE IRRITANT AND POTENTIAL CANCER HAZARD AUTHORIZED PERSONNEL ONLY
MSDS	Provide	Provide
Information and training	Initial and annually if >AL	Initial and annually if >AL; if < 0.1 ppm, no training required
Recordkeeping		
Exposure	30 yr including all pertinent data	30 yr. including all pertinent data (MSDS, PPE, fit tests, etc.)
Medical	30 yr + employment	30 yr. + employment
Training	1 yr from date of training	Not specified
Transfer of records	To Director if no successor	To Director of OSHA if no receiver
Observation of monitoring	Affected employee or their representative; PPE to be provided	Affected employee or their representative; PPE to be provided
Comments	**Cadmium used restricted to certain uses; contact OHB**	

Requirements	METHYLENE CHLORIDE	METHYLENE DIANILINE (MDA)
PEL//AL	25 ppm//12.5 ppm; 125 STEL	10 ppb//5 ppb 8-hr TWA; 100 ppb STEL **(skin)**
Monitoring	<AL and ≤STEL = none <AL but > STEL = STEL every 3 mo ≥AL, but ≤TWA and ≤STEL =TWA every 6 mo ≥AL, but ≤TWA and >STEL =TWA every 6 mo; STEL every 3 mo >TWA but ≤STEL = TWA every 3 mo >TWA and >STEL = TWA and STEL every 3 mo (until 2 consecutive results 7 days apart <AL and STEL) Process changes Spills, ruptures, changes	<AL = none; ≥AL but ≤PEL = 6 mo >PEL = 3 mo (until 2 consecutive results 7 days apart <AL) When process or work practices change Shall visually monitor workers for dermal contamination
Notification, no. of working days	15	15
Regulated area	>PEL, signs required	>PEL and potential dermal exposure, signs required
Compliance methods	Engineering, local exhaust PPE Good handling and housekeeping Control sources of ignition Fire extinguishers and training	Engineering, local exhaust PPE Good handling and housekeeping No dermal contact No job rotation to reduce exposure
Compliance program	>PEL, written plan	>PEL, written plan
Respirators	Interim control	Interim control; HEPA and OV (when liquid or heat is involved)
Medical surveillance	≥AL 30 days or more ≥PEL or STEL 10 or more days/yr >PEL or STEL for any time if cardiac or other MC-related health issues Emergencies	≥AL 30 days or more/yr. Subject to dermal exposure ≥15 days/yr Emergencies Those suspected of dermal exposure Those with signs and symptoms
Medical removal	If medically required, full protection	
Signs	DANGER METHYLENE CHLORIDE POTENTIAL CANCER HAZARD AUTHORIZED PERSONNEL ONLY RESPIRATOR REQUIRED	DANGER METHYLENEDIANILINE MAY CAUSE CANCER LIVER TOXIN AUTHORIZED PERSONNEL ONLY RESPIRATORS AND PROTECTIVE CLOTHING MAY BE REQUIRED TO BE WORN IN THIS AREA
Labels	DANGER CONTAINS BENZENE CANCER HAZARD	DANGER CONTAINS MDA MAY CAUSE CANCER LIVER TOXIN
MSDS	Provide	Provide
Information and training	Initial and annually if >AL	Initial and annually if >AL
Recordkeeping		
Exposure	30 yr including all pertinent data	30 yr including all pertinent data
Medical	30 yr + employment	30 yr + employment
Transfer of records	To Director if no successor	To Director if no successor
Observation of monitoring	Affected employee or their representative; PPE to be provided	Affected employee or their representative; PPE to be provided

Requirements	HEXAVALENT CHROMIUM
PEL//AL	0.005 mg/m^3 (5 ug/m^3)
Monitoring	<AL = none ≥AL but ≤PEL = 6 mo >PEL = 3 mo (until 2 consecutive results 7 days apart <AL) or when process changes or reason to suspect exposure >AL
Notification	15 working days
Regulated area	>PEL or reasonably expected to be; signs required
Compliance methods	Engineering, local exhaust Work practices Painting aircraft or large aircraft parts; <25 ug/m^3 if feasible Does not apply if ≤PEL for 30 days/yr PPE Good handling/housekeeping No job rotation
Compliance program	Not applicable
Respirators	Interim control
Medical surveillance	≥AL 30 days or more/yr (are or will be) Signs and symptoms Emergencies
Medical removal	Not specified
Signs **Labels**	(As required by HazCom Standard)
MSDS	Provide
Information and training	Contents of standard Purpose and description of medical surveillance program (plus HazCom)
Recordkeeping	Exposure monitoring, historical data, objective data, and medical surveillance
Transfer of records	Not listed
Observation of monitoring	Not listed
Comments	This is a performance standard.

Contents

1.0 PURPOSE....2
2.0 APPLICABILITY....2
3.0 BACKGROUND....2
4.0 POLICY....2
5.0 RESPONSIBILITIES....2
5.1 Safety and Health Division Chief....2
5.2 Operations Program Lead....3
5.3 Chemical Hygiene Officer....3
5.4 Chemical Management Staff....3
5.5 Medical Services Staff....3
5.6 Industrial Hygiene Staff....4
5.7 Laboratory Line Managers or Supervisors of Employees Who Work With Laboratory -Scale Amounts of Hazardous Chemicals....4
5.8 Laboratory Workers....4
5.9 SHeD Plum Brook Station Team Lead....4
6.0 REQUIREMENTS (*29 CFR 1910.1450 and NASA Procedural Requirement (NPR) 1800.1C*)....4
6.1 Employee Protection....5
6.2 Accessibility....5
6.3 Laboratory Standard Operating Procedures (LSOPs)....5
6.4 Exposure Reduction....5
6.5 Engineering Controls and/or Laboratory Design....6
6.6 Training....6
6.7 Special Projects....6
6.8 Occupational Medical Program....6
6.9 Hazardous Substance Special Protections....7
6.10 Review….....7
7.0 RECORDS....7
8.0 REFERENCES....7
APPENDIX A —Definitions and Acronyms....9

Chapter 25—Chemical Hygiene Policy

Note: The current version of this chapter is maintained and approved by the Safety and Health Division (SHeD). The last revision date of this chapter was May 2012. The current version is located on the Glenn Research Center intranet http://smad-ext.grc.nasa.gov/shed/pub/ohpm/ohpm-manual.pdf. Approved by Chief of Safety and Health Division.

1.0 PURPOSE

This chapter establishes NASA Glenn Research Center's (GRC's) policy for the laboratory-scale use and handling of hazardous chemicals. The guidelines for the specific procedures and practices to address this policy are found in NASA GRC's Chemical Hygiene Plan. The plan details that all employees of GRC at Lewis Field and Plum Brook Station, tenant employees, and resident support services contractors involved in the laboratory-scale use of hazardous chemicals are to be informed that their lives or health may depend on their knowledge of the chemicals they use or work with, on following proper handling procedures, use of engineering controls, and on wearing appropriate protective apparel and equipment.

2.0 APPLICABILITY

This chapter is applicable to all NASA GRC civil servants, tenants, and resident support services contractor personnel engaged in the laboratory use of hazardous chemicals. A Chemical Hygiene Plan has been established as part of this policy to assure Center compliance with the Occupational Safety and Health Administration (OSHA) Regulation 29 Code of Federal Regulations (CFR) 1910.1450, Occupational Exposure to Hazardous Chemicals in Laboratories. The Safety, Health and Environmental Division (SHED) administer the Chemical Hygiene Plan. Implementation of the plan is the responsibility of each laboratory line manager or supervisor.

3.0 BACKGROUND

On January 31, 1990, OSHA issued the final rule 29 CFR 1910.1450, Occupational Exposure to Hazardous Chemicals in Laboratories. This chapter prescribes the Center's policy with regard to that directive.

4.0 POLICY

It is the policy of GRC to protect the lives and health of employees who work with hazardous chemicals in laboratories by providing adequate laboratory facilities, equipment, training, personal protection, and environmental surveillance of their workplace. This policy is in response to the following regulations:

- OSHA, 29 CFR 1910.1450, Occupational Exposures to Hazardous Chemicals in Laboratories, as revised
- Executive Order 12196, Occupational Safety and Health Provisions for Federal Employees

Related SHeD manual chapters include Environmental Programs Manual, Chapter **3**, Water Pollution Control; Chapter **4**, Air Pollution Control; Chapter **5**, Management of Hazardous Materials, and Hazardous Wastes, and Universal Wastes for Reuse, Recycling, or Disposal.

Related include Occupational Health Programs Manual chapters include Chapter **3**, Hearing Conservation; Chapter **4**, Respiratory Protection Program; Chapter **7**, Local Exhaust Ventilation; Chapter **12**, Indoor Environmental Quality, and Chapter **20**, Hazard Communication Policy. More information on these specific areas is found in their respective chapters.

5.0 RESPONSIBILITIES

5.1 Safety and Health Division Chief

- Ensures a qualified individual is identified as the Chemical Hygiene Officer, to carry out the responsibilities set forth in the Chemical Hygiene Plan, by the organization tasked with implementation of Chemical Hygiene Policy.

- Assures the availability of resources and technical support necessary for establishing, executing, reviewing, and maintaining the Chemical Hygiene Plan, in compliance with OSHA 29 CFR 1910.1450
- Appoints a technically qualified individual as the Operations Program Lead to oversee the Chemical Hygiene Officer, Industrial Hygiene Staff, and Medical Services Staff's execution of the Chemical Hygiene Plan

5.2 Occupational Health Program Lead

- Provides Civil Servant oversight of the Chemical Hygiene Officer's establishment of the Chemical Hygiene Plan
- Oversees the coordination of the Chemical Management Staff, the Industrial Hygiene Staff, and the Medical Services Staff as they administer the Chemical Hygiene Plan
- Oversees the performance of Medical Services for testing and monitoring of selected employees, as required
- Oversees the industrial hygiene review of the laboratory standard operating procedure (LSOP) and hazard assessment programs

5.3 Chemical Hygiene Officer

- Establishes, administers, and maintains the Chemical Hygiene Plan in coordination with all appropriate GRC personnel
- Ensures that appropriate warning placards, signs, and labels are provided or arranged for and are in place at designated laboratory areas, as necessary
- Is responsible for the overall safe operation of chemical laboratories connected with assigned program
- Determines the types and levels of training requirements for GRC, tenant, and resident support services contractor employees involved in the laboratory use of hazardous chemicals as part of the assigned program
- Ensures that all who need to enter chemical laboratories (employees, contractors, visitors, maintenance, janitorial, etc.) have been properly trained prior to being allowed actual entry into those laboratories
- Coordinates with Industrial Hygienist Staff for training in the proper use of personal protective equipment (PPE)
- Ensures that Facilities Division be involved in the Risk Assessment process, before any equipment is purchased
- Provides technical guidance on implementation of the Chemical Hygiene Plan

5.4 Chemical Management Staff

- Provides for chemical-specific training to laboratory workers, annually or when requested by the line supervisor
- Audits each area with an LSOP to ensure compliance of the Chemical Hygiene Plan (If a discrepancy is found, a written statement is sent to the Lab, area supervisor, and to the Chemical Hygiene Officer. A follow-up inspection will be conducted and the offending area will have two additional unprompted inspections within 1 year of the offending occurrences.)
- Provides technical guidance to laboratory line managers or supervisors on developing LSOPs and on proper storage and handling of hazardous chemicals
- Oversees the chemical hygiene aspect of the building inspection program

5.5 Medical Services Staff

- Maintains medical records, as required

- Provides information on medical testing available to the laboratory worker
- Provides medical training to appropriate groups

5.6 Industrial Hygiene Staff

- Reviews and approves LSOPs
- Conducts or oversees chemical exposure assessments

5.7 Laboratory Line Managers or Supervisors of Employees Who Work With Laboratory-Scale Amounts of Hazardous Chemicals

- In conjunction with the Chemical Hygiene Officer, determine the types and levels of training requirements for the GRC, tenant, or resident support services contractor employees involved in the laboratory use of hazardous chemicals within the assigned laboratory work area
- Ensure that the Chemical Hygiene Plan is implemented
- Develop any LSOP, under the technical guidance of Chemical Management, for laboratory processes
- Ensure that workers, including summer and temporary staff, know and follow the chemical hygiene rules, know that protective equipment is available and in working order, and know that appropriate training has been provided
- Provide regular, formal chemical hygiene and housekeeping inspections, including routine inspections of protective and emergency equipment
- Know the current legal requirements concerning regulated substances
- Determine the required protective laboratory practices and equipment
- Ensure that facilities and training for use of any material being ordered are adequate
- Ensure that ownership of hazardous materials is transferred to appropriate personnel during retirement or employee separation events

5.8 Laboratory Workers

- Responsible for following the requirements in the Chemical Hygiene Plan, LSOPs, and safety permits
- Identify chemical hazards, use engineering controls and PPE when required, and ensure proper disposal of chemicals when no longer needed
- Ensure best practices for chemical procurement and usage are followed, including procuring the smallest amount feasible, consideration of green purchases, attention to storage requirements of chemicals, and transfer of chemicals to appropriate personnel during retirement or employee separation

5.9 SHED Plum Brook Station Team Lead

- In conjunction with the Chemical Hygiene Officer, assures compliance with the OSHA Laboratory Standard in the laboratories located at Plum Brook Station

6.0 REQUIREMENTS (*29 CFR 1910.1450 AND NASA PROCEDURAL REQUIREMENT (NPR) 1800.1C*)

All aspects of the GRC Chemical Hygiene Policy are required to assure compliance with OSHA 29 CFR 1910.1450, NPR 1800.1C, and Executive Order 12196. The requirement of the GRC Chemical Hygiene Policy is enacted through the GRC Chemical Hygiene Plan.

6.1 Employee Protection (CFR 1910.1450)

Employees using hazardous chemicals, as defined in CFR 1910.1450, shall have the equipment and systems in place to protect employees from health hazards including exposure limits, including but not limited to

- PPE, which is available to each individual such as gloves, safety glasses, and lab coats
- PPE, which is available to each facility or laboratory such as eyewash fountains, safety showers, and fire extinguishers

  Training, including training on proper use of PPE, fire extinguishers, spills and other exposure routes, and safe handling of chemicals

6.1 - The SHeD verification procedure to ensure compliance with the requirements listed in this section shall be accomplished through a programmatic-assessment review of LSOPs, chemical management's laboratory inspections, fire protection training records and GRC's HazCom and PPE Training Records.

6.2 Accessibility (CFR 1910.1450)

The Chemical Hygiene Plan shall be readily available to all employees and employee representatives.

6.2 - The SHeD verification procedure to ensure compliance with the requirements listed in this section shall be accomplished by ensuring that the Chemical Hygiene Plan is posted on the SHeD Manual web page.

6.3 Laboratory Standard Operating Procedures (LSOPs) (CFR 1910.1450)

LSOPs shall be relevant to safety and health considerations when using hazardous chemicals. LSOPs shall be laboratory and operation specific. Each laboratory must have a distinct LSOP for each operation. Additional guidance on LSOPs can be found in the Chemical Hygiene Plan and the specific LSOP.

6.3 - The SHeD verification procedure to ensure compliance with the requirements listed in this section shall be accomplished by reviewing and updating the LSOPs annually.

6.4 Exposure Reduction (CFR 1910.1450)

The Chemical Hygiene Plan shall contain criteria that GRC will use to determine and implement control measures to reduce employee exposure to hazardous chemicals including engineering controls, PPE, and hygiene practices. Additional controls will be in place for known extremely hazardous chemicals.

6.4 - The SHeD verification procedure to ensure compliance with the requirements listed in this section shall be accomplished through a programmatic-assessment review of LSOPs, chemical management's laboratory inspections, GRC's HazCom and PPE Trainings.

6.5 Engineering Controls and/or Laboratory Design (CFR 1910.1450)

- Ventilation and fume hoods.—Maintenance plans ensuring that fume hoods and other protective equipment are functioning properly and specific measures shall be taken to ensure proper and adequate performance of the equipment. Please refer to Chapter 7 of the Occupational Health Programs Manual, Local Exhaust Ventilation (LEV) for additional guidance.
- Other local ventilation areas.—Guidance on use and maintenance of ventilated storage cabinets and canopy hoods.
- Special ventilation areas.—Guidance and maintenance for glove boxes, isolation rooms, and other scrubber treatment areas.

6.5 - The SHeD verification procedure to ensure compliance with the requirements listed in this section shall be accomplished by ensuring that Chapter 7 of the OHPM is reviewed and updated according to SHeD guidelines and that ventilation stickers/tags have been reviewed and are up-to-date.

6.6 Training (CFR 1910.1450)

The Chemical Hygiene Plan defines content and frequency of supervisor training and ensures that information and training provisions are in place. It also defines content and frequency of employee training and ensures that information and training provisions are in place.

6.6 - The SHeD verification procedure to ensure compliance with the requirements listed in this section shall be accomplished by reviewing HCDD training records for the annual LSOP training.

6.7 Special Projects (CFR 1910.1450)

Special projects are particular laboratory operations, procedures, or activities that require approval prior to implementation. These are addressed through the use of the Laboratory Permits and Risk Assessment program, as defined in the Chemical Hygiene Plan.

6.7 - The SHeD verification procedure to ensure compliance with the requirements listed in this section shall be accomplished through a programmatic-assessment review of LSOPs, chemical management's laboratory inspections, Safety Permits, Hazardous Operations and Job Hazard Analyses.

6.8 Occupational Medical Program (*NPR 1800.1C*)

The Chemical Hygiene Plan provides guidance for the regular surveillance of personnel that either routinely come into contact with hazardous materials or are a part of a specific medical program that requires surveillance beyond the routine program.

The Laboratory Line Manager or Supervisor shall provide all employees who work with hazardous chemicals an opportunity to receive medical attention, including any follow-up examinations, which the examining physician determines to be necessary.

6.8 - The SHeD verification procedure to ensure compliance with the requirements listed in this section shall be accomplished through a programmatic-assessment review of medical surveillance lists by Industrial Hygiene..

6.9 Hazardous Substance Special Protections (*NPR 1800.1C*)

Provisions shall be in place for additional employee protection for work with particularly hazardous substances including allergens, embryo toxins, moderately chronic, highly acute toxicity materials, nanomaterials, and highly chronic toxicity materials.

The aim of these additional procedures is to minimize exposure to these toxic substances by any route using all reasonable precautions. These additional procedures are appropriate for substances with moderate chronic toxicity and highly chronic toxicity.

6.9 - The SHeD verification procedure to ensure compliance with the requirements listed in this section shall be accomplished by ensuring that the Chemical Hygiene Plan and LSOP's are reviewed and updated on an annual basis.

6.10 Review (CFR 1910.1450)

NASA GRC shall review and evaluate the effectiveness of the Chemical Hygiene Plan at least annually and update as necessary.

6.10 - The SHeD verification procedure to ensure compliance with the requirements listed in this section shall be accomplished by ensuring that a programmatic assessment of the Chemical Hygiene Plan is completed on an annual basis.

7.0 RECORDS

NASA GRC Chemical Hygiene Plan.—Maintained by Chemical Management.

Copies of LSOPs.—Maintained by each Chemical Laboratory Line Manager or Supervisor.

Record LSOPs.—Maintained by Chemical Management in eRoom system.

Training records for civil servants.—Maintained by the Human Capital Development Division.

Training records for affected employees.—Maintained by the Human Capital Development Division.

Training records for affected employees.—Maintained by tenant organizations.

8.0 REFERENCES

Document number	Document name
GLM–QS–8500.1A	Environmental Programs Manual, Chapter **3**, Water Pollution Control
GLM–QS–8500.1A	Environmental Programs Manual, Chapter **4**, Air Pollution Control
GLM–QS–8500.1A	Environmental Programs Manual, Chapter **5**, Management of Hazardous Materials, Hazardous Wastes and Universal Wastes for Reuse, Recycling or Disposal

GLM–QS–1800.1	Occupational Health Programs Manual, Chapter **20**, Hazard Communication Policy
GLM–QS–1800.1	Occupational Health Programs Manual, Chapter **3**, Hearing Conservation Program
GLM–QS–1800.1	Occupational Health Programs Manual, Chapter **4**, Respiratory Protection Program
GLM–QS–1800.1	Occupational Health Programs Manual, Chapter **7**, Local Exhaust Ventilation
GLM–QS–1800.1	Occupational Health Programs Manual, Chapter **12**, Indoor Environmental Quality
CFR 1910.1450	Occupational Exposures to Hazardous Chemicals in Laboratories
Executive Order 12196	Occupational Safety and Health Provisions for Federal Employees
NPR 4100.1D	NASA Procedural Requirement, Materials Inventory Management Manual
NPR 1800.1C	NASA Procedural Requirement, NASA Occupational Health Program Procedures

APPENDIX A—DEFINITIONS AND ACRONYMS

Chemical Hygiene Plan.—A written program developed and implemented by Chemical Management of the Glenn Research Center (GRC) Safety and Health Division, which sets forth procedures, equipment, personal protective equipment, and work practices that (a) are capable of protecting employees from the health hazards presented by hazardous chemicals used in that particular workplace and (b) meet the requirements of Section 2.0 of this document. This written program applies to employees of all organizations at GRC involved in the laboratory use of hazardous chemicals.

Code of Federal Regulations (CFR)

Employee.—Any GRC civil servant, tenant, or resident support services contractor employee who may be exposed to hazardous chemicals in his or her assigned laboratory work area under normal operating conditions or in foreseeable emergencies.

GRC civil servant employee.—A federal employee directly employed by NASA.

Tenant employee.—An employee of a co-located organization not directly involved in NASA activities. Examples are employees of the United States Army at Lewis Field and employees of the Department of Agriculture and Department of the Interior at Plum Brook Station.

Resident support services contractor employee.—An employee of any organization contracted by NASA to provide service in support of NASA operations. A list of support service contractors can be located at http://www.grc.nasa.gov/Doc/contract.htm.

Flammable liquid.—A flammable material can be a solid, liquid, or gas. The United States Occupational Health and Safety Administration (OSHA) defines a flammable liquid as "any liquid having a flash point below 100 °F (37.8 °C), except any mixture having components with flash points of 100 °F (37.8 °C) or higher, the total of which make up 99 percent or more of the total volume of the mixture. Flammable liquids shall be known as Class I liquids."

Glenn Research Center (GRC)

Hazardous chemical.—A chemical for which there is statistically significant evidence based on at least one study conducted in accordance with established scientific principles that acute or chronic health effects may occur in exposed employees.

Health hazard.—Includes chemicals that are carcinogens, toxic, or highly toxic agents, reproductive toxins, irritants, corrosives, sensitizers, hepatotoxins, nephrotoxins, neurotoxins, agents that act on the hematopoietic systems, and agents that damage the lungs, skin, eyes, or mucous membranes.

Laboratory scale.—Work with substances in which the containers used for reactions, transfers, and other handling are designed to be easily and safely manipulated by one person. Laboratory scale excludes those workplaces whose function is to produce commercial quantities of materials.

Laboratory standard operating procedure (LSOP).—A set of written procedures explaining how to safely work with hazardous chemicals typically found in a laboratory environment.

Laboratory-type hood.—A device located in a laboratory, enclosed on five sides with a movable sash or fixed partial enclosure on the remaining side, constructed and maintained to draw air from the laboratory and to prevent or minimize the escape of air contaminants into the laboratory; it allows chemical manipulations to be conducted in the enclosure without insertion of any portion of the employee's body other than hands and arms.

Walk-in hoods with adjustable sashes meet the above definition provided that the sashes are adjusted during use so that the airflow and the exhaust of air contaminants are not compromised, and employees do not work inside the enclosure during the release of airborne hazardous chemicals.

Laboratory use of hazardous chemicals.—The handling or use of such chemicals in which all of the following conditions are met:

1. Chemical manipulations are carried out on a laboratory scale

2. Multiple chemical procedures or chemicals are used
3. The procedures involved are not part of a production process, nor in any way simulate a production process
4. Protective laboratory practices and equipment are available and in common use to minimize the potential for employee exposure to hazardous chemicals

Local exhaust ventilation (LEV)

Material Safety Data Sheet (MSDS).—A document provided by the manufacturer or importer of a hazardous chemical or prepared by Glenn researchers that identifies a hazardous material and provides information about the associated physical and health hazards. Although MSDSs vary in both format and content, all must contain the following information: product identification, manufacturer's name and address, hazardous ingredients information, physical and chemical characteristics, fire and explosion hazard data, reactivity data, health hazard data, precautions for safe handling and use, and control measures.

Occupational Safety and Health Administration (OSHA).—A Federal agency responsible for establishing and enforcing standards for exposure of workers to harmful materials in workplace atmospheres, and other matters affecting the health and well-being of industrial and laboratory personnel.

NASA Procedural Requirement (NPR)

National Institute for Occupational Safety and Health (NIOSH).—Part of the Centers for Disease Control and Prevention, U.S. Public Health Service, and U.S. Department of Health and Human Services.

Personal protective equipment (PPE).—PPE refers to those items that can be worn to protect an individual from various hazards. PPE can refer to hearing protection, eye and face protective equipment, whole-body coverings, gloves, foot protection, and respiratory protection. PPE should only be used as a last resort or when engineering and administrative controls (i.e., work practices, protocols, and standard operating procedures) are insufficient to control the hazard. PPE should not be relied upon to be your primary defense against chemical or other hazards.

Physical hazard.—A chemical for which there is scientifically valid evidence that it is a combustible liquid, compressed gas, explosive, flammable, organic peroxide, oxidizer, pyrophoric, unstable (reactive), or water reactive.

Protective laboratory practices and equipment.—Those laboratory procedures, practices, and equipment accepted by laboratory health and safety experts as effective, or that the employer can show to be effective, in minimizing the potential for employee exposure to hazardous chemicals.

Safety and Mission Assurance Directorate (SMAD)

Safety and Health Division (SHeD)

Workarea.—For the purposes of Chemical Hygiene, this is a laboratory within the Lewis Field Center, Plum Brook Station, or an associated off-site facility where the "laboratory use of hazardous chemicals" occurs. It is a workplace where relatively small quantities of hazardous chemicals are used on a nonproduction basis. It is identified on a Laboratory Standard Operating Procedure by specific building number and room number. Other locations where hazardous chemicals are used but are outside the scope of "laboratory use of hazardous chemicals" fall under the requirements of the Hazard Communication Policy and Program (Chapter 20 of the Occupational Health Programs Manual and the HAZCOM Program).

JOHN H. GLENN RESEARCH CENTER

CHEMICAL HYGIENE PLAN

TABLE OF CONTENTS

CHAPTER	TITLE	PAGE
	Introduction	ii
	Change Record	iii
1.0	General Standard Operating Procedures	1
2.0	Personal Protective Apparel and Equipment	5
3.0	Spills and Accidents	8
4.0	Storage	11
5.0	Waste Disposal	18
6.0	Signs and Labels	20
7.0	Housekeeping, Maintenance and Inspections	21
8.0	Allergens and Embryo Toxins	22
9.0	Moderately Chronic or Highly Acute Toxicity Materials	23
10.0	Highly Chronic Materials	25
11.0	Hazard Identification	27
12.0	Laboratory Permits and Risk Assessment	29
13.0	Laboratory Design	31
14.0	Chemical Procurement and Distribution	33
15.0	Environmental Monitoring	34
16.0	Occupational Medicine Program	35
17.0	Training and Information	37
18.0	Records	39
	References	40

NASA GLENN RESEARCH CENTER
CHEMICAL HYGIENE PLAN

INTRODUCTION

OSHA LABORATORY STANDARD

On January 31, 1990 the Occupational Safety and Health Administration (OSHA) issued a final rule entitled, Occupational Exposures to Hazardous Chemicals in Laboratories, also called the Laboratory Standard. Title 29, Code of Federal Regulations (CFR), Part 1910.1450 codifies this rule. The final standard applies to all laboratories that use hazardous chemicals that meet the definition of laboratory use and laboratory scale provided in the standard.

The Laboratory Standard also defines the need for each laboratory to develop a Chemical Hygiene Plan. This document, the NASA Glenn Research Center (GRC) Chemical Hygiene Plan, fulfills the requirements as specified in the OSHA standard.

NASA GLENN RESEARCH CENTER CHEMICAL HYGIENE POLICY

The GRC Occupational Health Programs Manual, Chapter 25, outlines the Center's policy about the Laboratory Standard. The definition of the authorities and responsibilities are in a manner that allows flexibility to adjust the program to the specific needs of each laboratory.

NASA GLENN RESEARCH CENTER CHEMICAL HYGIENE PLAN

This document establishes the NASA GRC Chemical Hygiene Plan. This Plan is a mandatory chemical hygiene program designed to minimize employee and property risks. This program is a regular, continuing effort not merely a standby or short-term activity. All GRC employees at Lewis Field and Plum Brook Station, along with tenant organization employees and resident contract personnel who are laboratory workers as defined in the Laboratory Standard, shall follow its recommendations. The Plan is administered by the Occupational Health Branch (OHB) of the Safety and Health Division (SHeD).

This Chemical Hygiene Plan, in conjunction with Laboratory Standard Operating Procedures (LSOPs), establishes the procedures; equipment; Personal Protective Equipment (PPE); and work practices that are capable of protecting laboratory employees from the physical and health hazards presented by hazardous chemicals used in the workplace. This Plan meets the requirements of 29 CFR 1910.1450: Occupational Exposures to Hazardous Chemicals in Laboratories. The GRC Chemical Hygiene Officer will review this plan annually to ensure that the procedures still meet the needs of the Center.

Change Record

Rev.	Effective Date	Description
Basic	8/22/2003	Initial
B	6/10/2004	Revision
C	5/23/2006	Revision
D	5/17/2010	Revision
E	11/1/2011	Revision
F	11/1/2012	Revision

NASA GLENN RESEARCH CENTER
CHEMICAL HYGIENE PLAN

CHAPTER 1 - GENERAL STANDARD OPERATING PROCEDURES

The laboratories at the NASA Glenn Research Center (GRC) are diversified in nature, scope, and in the chemicals that they use. There are, however, basic and fundamental safety and health considerations that are applicable to all laboratory settings. The basic norms for work in chemical laboratories at GRC are in this Chapter. This listing is not exhaustive. All laboratory workers shall use good practices, common sense and good attention to detail in safety and health areas.

PLANNING

Good chemical hygiene planning is essential to a safe and healthful workarea. Each laboratory user is responsible for obtaining information and advice about the hazards of the chemicals they plan on using and the appropriate safe-handling procedures. Each user shall plan appropriate protective procedures and plan the best and safest positioning of equipment before beginning any new operation.

Information

Each employee involved in the laboratory use of hazardous chemicals shall read and understand the Material Safety Data Sheet and label before beginning work with any hazardous chemical. Do not work with a material if you are not aware of the hazards. If you need additional information, contact the supplier, SHeD or your supervisor. Only work with chemicals whose hazards you understand and which you can safely handle.

Make sure that you have all the necessary permits. If you need a review of the process, contact the Area Safety Committee.

Choice of Chemicals

Substitute chemicals with a lower physical and/or health hazard over a high hazard chemical whenever possible. Keep amounts of chemicals to a minimum to reduce possible exposure amounts.

Be sure the laboratory is equipped to safely handle the chemicals you are using. This includes ventilation and storage, as well as personal protective equipment.

Each laboratory has specific ventilation capabilities. Some laboratories have additional hoods or other ventilation equipment available. Each ventilation system has capability limits. Use only those chemicals for which the ventilation systems available are appropriate to ensure safety and health of the users and the facility.

USERS

Keep the work area clean and uncluttered. Label and store chemicals and equipment properly. Clean up the work area upon completion of an operation or at the end of each day.

Be alert to unsafe conditions. Notify your supervisor to ensure correction of the unsafe conditions when detected. If the unsafe condition cannot be corrected immediately, place appropriate warning signs and/or labels to notify others of the hazards until the unsafe condition is corrected.

Do not eat, drink, smoke, chew gum or apply cosmetics or lotions in areas where laboratory chemicals are present. Wash hands, using potable water, before conducting these activities. Do not store, handle or consume food or drinks in storage areas, refrigerators, laboratory glassware or utensils. Do not engage in practical jokes or other behaviors that might confuse, startle or distract another worker.

Avoid working alone in a building. **Do not** work alone in a laboratory if the procedures being conducted are hazardous. (Reference: Glenn Safety Manual, Chapter 22, the Glenn Buddy System).

Avoidance of Routine Exposure

Develop and encourage safe habits: Avoid unnecessary exposure to chemicals by any route. It is prudent to minimize **all** chemical exposures. Always avoid skin contact with chemicals. **Do not** smell or taste chemicals. Never use mouth suction to pipette or start a siphon.

Avoid underestimation of risk: Minimize exposure, even for substances of no known significant hazard. Take special precautions for work with substances that present special hazards. Assume that any mixture will be more toxic than its most toxic component and that all substances of unknown toxicity are toxic.

Do not exceed the Permissible Exposure Limits (PEL's) listed in OSHA regulation 29 CFR 1910.1000, as revised, and the Threshold Limit Values (TLV's) of the American Council of Governmental Industrial Hygienists (ACGIH). The use of all OHSA regulated materials shall be evaluated by an industrial hygienist. Refer to Occupational Health Program Manual Chapter 24, OSHA Regulated Materials for more information.

Also, for hazard and exposure assessments of chemicals refer to Occupational Health Program Manual Chapter 21, Hazard and Exposure Assessment Program for guidance. Do not allow release of toxic substances in cold rooms, clean rooms and warm rooms, since these have contained re-circulated atmospheres. Take all precautions not to contaminate the air in the room.

Visitors

Take extra care to ensure no hazardous chemical exposure to any visitor of the laboratory. Each visitor shall wear all the necessary and proper personal protective apparel.

Unattended Operation

Leave lights on. Place an appropriate sign, which includes operator(s) telephone number(s), on the door and provide for containment (such as cooling water) in case there is failure of a utility service to an unattended operation.

Notify the **Security Management and Safeguards Office** if the unattended operation poses a potential hazard to security personnel or other nearby work areas or offices.

Notify the Environmental, Health, and Safety **HELPLINE 3-8848,** the **GRC Dispatcher at 911 (internal GRC phone only) or from an external cell phone at 216 433 8888 (Plum Brook 419 621-3222)**, if the unattended operation poses a potential hazard to the laboratory or if special precautions are necessary if there is an emergency.

Exiting Laboratory

Wash areas of exposed skin thoroughly with soap and potable water as soon as practical after working with chemicals. Remove (and properly clean, using potable water, if reusable) all personal protective apparel, taking care to avoid incidental exposure, before leaving the laboratory. If potable water hand wash facilities are not available inside the lab, disposal gloves shall be worn and discarded before exiting the lab. Hands should then be washed as soon as practical after exiting the lab. For other PPE (respirators, glasses, goggles etc.), use non-alcohol wipes.

EQUIPMENT

Handle and store laboratory glassware with care to avoid damage. Do not use damaged glassware and replace damaged glassware immediately. Dispose of damaged glassware using a sharps container provided by Waste Management.

Use extra care with Dewar flasks and other evacuated glass apparatus. Shield or wrap Dewar flasks or other evacuated glass apparatus to contain chemicals and fragments should an implosion occur.

Use equipment only for its designed purpose. Inspect and maintain equipment regularly. Test glove boxes before use.

Vent apparatus that may discharge toxic chemicals (vacuum pumps, distillation columns, etc.) into local exhaust devices.

Only use the appropriate personal protective apparel when working with hazardous chemicals. Inspect gloves, safety glasses, chemical goggles, lab coats, aprons, respirators and all other personal protective equipment before use. Reusable gloves shall be washed using potable water after each use **before** removing. If potable water hand wash facilities are not available inside the lab, disposal gloves shall be worn and discarded before exiting the lab. Hands should then be washed as soon as practical after exiting the lab. Lab coats shall never be worn outside of the lab.

Ventilation Hoods

Use the hood for all operations that might result in release of toxic chemical vapors, mists or dust. Leave the hood "on" when it is not in active use if storing toxic substances in it or if it is uncertain whether adequate maintenance of general laboratory ventilation exists when it is "off".

All hoods shall meet the ventilation requirements as specified in the GRC Occupational Health Program Chapter 7, Local Exhaust Ventilation.

Confirm adequate hood performance before use. Compliant laboratory hoods shall have a green survey tag that indicates the hood velocity and an expiration date beyond the date of use. The survey tag location is at the sash height at which an adequate hood velocity was determined, or the height the flow was measured will be specified on the tag. Also, verify that continuous flow monitoring system is operational and showing the required flow (e.g.-for lab hoods 80 – 120 fpm). Contact Industrial Hygiene Program Lead if the hood has a yellow or red survey tag, and for testing of hoods or interpretation of velocity testing results.

Do not use hoods for storage of large volumes of chemicals or equipment. If small volumes of chemicals must be stored in the hood, keep the volume stored to a minimum and do not allow materials to block vents or airflow.

Autoclaves

Always use Autoclaves according to the manufacturers' specifications. Approval of the supervisor is necessary for any alteration of the autoclave to perform differently or for use with non-recommended materials. Submit a written Standard Operating Procedure to the Chemical Hygiene Officer for a review of all changes.

Use all the proper personal protective equipment and apparel when autoclaving materials. The autoclave unit and the area require proper ventilation.

Centrifuges

Use all centrifuges according to the manufacturers' specifications. Each user must take extra care not to overfill the containers such that spills will occur during operation.

Use only the recommended containers with the centrifuge. The supervisor shall approve any alterations. Submit a written Standard Operating Procedure to the Chemical Hygiene Officer for a review of all changes.

LABORATORY STANDARD OPERATING PROCEDURES

Each chemistry laboratory operation must have a written Laboratory **Standard Operating Procedure (LSOP)** for each distinct operation. Figure 1-1 presents the GRC outline for the content of a laboratory LSOP. Each laboratory will maintain a copy of its LSOP. In addition to describing safe operating practices, the LSOP shall also address regulatory compliance requirements. Each laboratory shall submit a copy of each LSOP to the Chemical Hygiene Officer. The LSOP shall be reviewed on an annual basis and/or updated whenever there is a change of operations in the lab. Decisions concerning expiration of the LSOP will be made at each annual review.

It is the responsibility of the designated Laboratory Contact to submit and revise the LSOP. The Laboratory Contact and the Chemical Hygiene Officer or Industrial Hygiene professional will review and approve each laboratory LSOP.

FIGURE 1-1: Standard Operating Procedures Guide

LABORATORY STANDARD OPERATING PROCEDURES

Process Name: _____
Building #:_____
Laboratory Room #(s): _____
LSOP #: _____
Safety Permit #: _____
Issue Date: _____ **Expiration Date:** _____

Designated Contacts: **(names(s)** and phone number(s)) in case of emergency
EMERGENCY CALL NUMBER: 911 (Internal GRC phone only)
LABORATORY OFF-HOURS CONTACT: **name(s)** and phone number(s)
LABORATORY CONTACTS DURING DAY SHIFT:
name(s) and phone numbers

Approved by: _____ Date: _____
Laboratory Contact
Prepared by: _____ Date: _____
Chemical Hygiene Specialist
Accepted by: _____ Date: _____
Chemical Hygiene Officer

I. OVERVIEW OF LABORATORY
II. SPECIFIC OPERATION PROCEDURES
II. A. Laboratory Operating Procedure
III. REGULATORY COMPLIANCE REQUIREMENTS
III. A. Environmental Compliance
- **Industrial Hygiene**
- **Water Discharges**
- **Air Emissions**
- **Waste Disposal**

III. B. Safety Compliance
IV. EMERGENCY RESPONSE PROCEDURES
V. REVISING THIS STANDARD OPERATING PROCEDURE

CHAPTER 2 - PERSONAL PROTECTIVE APPAREL AND EQUIPMENT

PERSONAL PROTECTIVE EQUIPMENT

Read the Material Safety Data Sheet and Laboratory Standard Operating Procedure (LSOP) to determine the appropriate protective apparel to use when working with the hazardous chemical. Consult with the **Industrial Hygiene Program Lead** for further guidance.

Do not use damaged or inappropriate protective apparel. Use only protective apparel compatible with the required level of performance for substances being handled. Use any other protective and emergency apparel and equipment as appropriate to minimize exposure to a hazardous chemical. Specific personal protective equipment requirements are to be listed in the laboratory LSOP.

Clean and maintain personal protective equipment before and after each use. Make sure that there are no tears or defects before using personal protective equipment.

Eye

Ensure that all persons wear the appropriate eye protection, including visitors, in areas of chemical storage or handling. Follow all procedures as specified in the Glenn Safety Manual, Chapter 15, Personal Protective Equipment, as revised. Eye wash stations are to be provided for emergency use.

Chemical goggles provide the best all around protection against chemical splashes, vapors, dusts and mists. Goggles that have indirect vents or are not vented provide the most protection. If using a laser, wear safety glasses or goggles which provide protection against the specific wavelength of that laser.

Prescription glasses do not provide adequate protection in a laboratory setting. Prescription safety glasses can be used with the appropriate goggles for maximum eye protection.

Contact lenses do not provide adequate protection. Additional eye protection such as goggles is necessary if contact lenses are worn. Contact lenses should be worn in the laboratory with extreme care. Inform your supervisor if you wear contact lenses so that the supervisor can take special precautions. Contact lenses cannot be worn if the following chemicals are being used in the lab:

* 1, 2-dibromo-3-chloropropane (DBCP): OSHA regulation
* 4, 4'-methylene dianiline: OSHA regulation
* Ethyl alcohol: Study of absorption by Cerulli, et al. 1985
* Ethylene oxide: OSHA regulation
* Isopropyl alcohol: Study of absorption by Cerulli, et al. 1985
* Methylene chloride: OSHA regulation

Hearing

Use hearing protection when needed as specified in the GRC Occupational Health Program Manual, Chapter 3, Hearing Conservation Program. Check with the **Industrial Hygiene Program Lead** for details and applicability.

Respiratory

When engineering controls cannot sufficiently restrict air contaminant concentrations, use appropriate respiratory equipment. Inspect respirator and perform a user check before use. Comply with respirator selection and cartridge change schedule as issued by SHeD. Follow all guidelines as specified in the GRC Occupational Health Program Manual, Chapter 4: Respiratory Protection. Contact the **Industrial Hygiene Program Lead** for monitoring and determination of respiratory equipment needs.

Clothing

Confine long hair and loose clothing, such as neckties, scarves, etc., to ensure that they cannot become contaminated, with a hazardous material, causing exposure or an accident through incidental contact. Wear a laboratory coat when working with chemicals. Remove the laboratory coat immediately upon significant contamination. Laboratory coats, when not in use, shall be kept in the laboratory or other designated area. Launder laboratory coats frequently to avoid chemical build-up and possible exposure. A contaminated lab coat shall not be worn outside of the lab for any reason.

Rubber coated aprons can be worn to protect against chemical splashes. The apron may be worn over a laboratory coat for additional protection.

Face shields can protect against impact, dust, particulates, and chemical splashes for the face, eyes and throat. Always wear additional eyewear such as goggles underneath a face shield because the face shield only offers protection against impact and splashes. Chemical vapors and splashes can still travel under and around a face shield. If scratches or cracks are noticed in the face shield, replace the window.

Gloves

Wear appropriate gloves when the potential for skin contact or skin absorption with toxic materials exists. If unsure, please contact a SHED industrial hygienist or a manufacturer for appropriate glove selection. Inspect gloves for defects before each use. Reusable gloves shall be washed using potable water before removal and replaced periodically. If potable water hand wash facilities are not available inside the lab, disposable gloves shall be worn and discarded before exiting the lab. Hands should then be washed as soon as practical after exiting the lab.

Shoes

Always wear substantial protective shoes in the laboratory. Do not wear sandals, perforated shoes or sneakers at any time in the lab because these types of shoes do not form a good barrier against chemical exposure. Safety shoe material shall be of leather or other non-permeable safety shoe material.

PERSONAL PROTECTIVE EQUIPMENT

These are to be available for each laboratory:

An easily accessible drench-type safety shower supplied with potable water;
An eyewash fountain supplied with potable water;
A fire extinguisher;
Access to a nearby fire alarm and telephone for emergency use; and
Other items designated by the laboratory supervisor.

If all of the above protective equipment is not available in the laboratory, **the SHeD Occupational Health Branch**, the Chemical Hygiene Officer and the laboratory manager will make a determination of the steps taken to either to upgrade the laboratory or to find alternative protective equipment that will ensure comparable safety and hygiene.

All of the protective equipment listed above may not be feasible based on laboratory set-up or size, or in some cases, may result in an increased risk to the employee. In such cases, **the SHeD Occupational Health Branch**, the Chemical Hygiene Officer and the laboratory manager will determine alternative protective equipment to ensure that the employee has a safe and healthful laboratory.

With the assistance of the **SHeD Occupational Health Branch**, the laboratory manager is responsible of ensuring that all protective/emergency equipment is inspected regularly. The laboratory supervisor, the **SHeD Occupational Health Branch** and the Chemical Hygiene Officer may examine equipment during scheduled and unscheduled inspections for cleanliness, functionality and employee ease of access.

EMERGENCY EQUIPMENT AND APPAREL

Special emergency equipment and apparel determined to be necessary for each laboratory is to be available. Employees shall be trained in its proper use and should be included in each laboratory LSOP.

The use of certain highly toxic chemicals, such as hydrofluoric acid or certain cyanide compounds, may require that first aid antidote kits be readily available near to where an exposure could occur. These first aid antidote kits are to be used until emergency medical assistance arrives. It is the responsibility of the laboratory manager to ensure that the kits are acquired before the use of these chemical begins; the expiration dates of the kits are monitored; and personnel are trained in the proper use of the kits.

TRAINING

All users of personal protective equipment and apparel shall be properly trained in the selection and use. Contact the **Industrial Hygiene Program Lead,** the **SHeD Occupational Health Branch** for information on selection and training.

CHAPTER 3 - SPILLS AND ACCIDENTS

Glenn Research Center takes spills and accidents very seriously. The Center continues to take steps to reduce the risk of spills and accidents. In addition, there is an Emergency Preparedness Plan and an Emergency Response Team to reduce the scope of any accident or incident at the Center. Always take all steps to reduce the risk of spills and accidents in the laboratories.

SPILL CONTROL

Large Scale Spills and Accidents

In the event of a spill, determine the risk to yourself and others in the building. If no risk, dial the Environmental, Health, and Safety **HELPLINE, 3-8848**, or refer to the LSOP. If the material poses a risk to health or life, evacuate the area or building. In the case of a severe hazard, immediately call the **GRC Dispatcher at 911 (internal GRC phone only) or from an external cell phone at 216 433 8888 (Plum Brook 419 621-3222)**, from a safe location. Apprise the dispatcher of the situation, including location of the spill, size of spill, material spilled, known hazards of the material, also if the hazard is increasing with time.

A large spill will be defined by the type and amount of chemical that has been spilled. A spill will be defined as a large spill when it meets ANY of the following specifications:

- The material is identified in the LSOP as a hazardous substance and includes spill cleanup criteria.
- The spill is too large for you to handle
- The spill involves more than 500-mL of any hazardous materials
- The spill involves ANY amount of the following materials:
    - Strong acids such as hydrofluoric, fuming sulfuric, perchloric, red nitric or any acid that could emit gases
    - Strong bases concentrated enough to emit vapors such as ammonium hydroxide
    - Inhalation poisons that emit vapors or gases at room temperature and are highly toxic such as isocyanates and formates
    - Reactive compounds such as organic peroxides or phosphorous metal that are sensitive to air, shock, friction, water or temperature.
    - Mercury in any form
    - Radioactive materials
    - Biological materials
    - Extremely toxic substances that can be absorbed through the skin and are extremely toxic at low concentrations such as benzene and sodium cyanide.

For all large spills and accidents call the **GRC Dispatcher at 911 (internal GRC phone only, or from an external cell phone at 216 433 8888 (Plum Brook 419 621-3222),)** from a safe location. Give as much information regarding the incident as possible and follow instructions given until help arrives. Written emergency spill and accident plans, Glenn Safety Manual, Chapter 21, Mishap Reporting/Accident Investigation, as revised, and Glenn Safety Manual, Chapter 27, Building Emergency Evacuation Plan Program, as revised, include consideration of prevention, containment, clean-up and reporting. All personnel are to act in accordance with the plans

There is an audible alarm system in all parts of the laboratory buildings including isolation areas such as cold rooms. On the sound of the alarm, all persons are to secure the area and evacuate until SHeD or the SHeD PBS first responders allows reentry.

Simple Spills and Accidents

A simple spill is classified by a spill that does not meet any of the criteria of a large spill as detailed above. Simple spills do not necessarily require assistance. Laboratory workers who have had the proper training and possess the appropriate equipment can safely and effectively handle simple spills but if you are unsure of the proper techniques or safety protocols to follow call the **GRC Dispatcher at 911 (internal GRC phone only) or from an external cell**

phone at 216 433 8888 (Plum Brook 419 621-3222),. Contact SHED with any questions or concerns about proper spill clean-up practices.

Spill Control Plan

Each laboratory shall develop its spill control plan. Spill control kits shall be available where appropriate. Laboratory personnel shall be aware of the proper use of spill kits. A highly detailed spill control plan is necessary when working with the following:

aromatic amines;
biological materials;
carbon disulfides;
corrosives;
ethers;
flammable, volatile, or toxic chemicals;
hydrazine;
mercury;
nano-materials;
acids and bases;
nitro and nitrite compounds; and
radioactive materials.

Promptly clean spills, using appropriate protective apparel and equipment and proper disposal. Never attempt to cleanup a spill if you have any doubt as to the safety or proper protocol. If a spill reaches a drain inside a lab or anywhere outside a building, follow the large spill and accidents procedures.

Pyrophoric or Water-Reactive Spills

Call the **GRC Dispatcher at 911 (internal GRC phone only) or from an external cell phone at 216 433 8888 (Plum Brook 419 621-3222)**, immediately if a spill occurs with a pyrophoric or water-reactive material or if these types of materials are near the spill. Pyrophoric and water-reactive materials pose a greater threat to the safety and health of the responders to the spill.

Evacuation of Disabled Employees

If there is a spill or accident, take special care to ensure the safety and health of any disabled person(s) in the laboratory. Laboratory supervisors shall ensure that the procedures specified in the Glenn Safety Manual, Chapter 27, Appendix A: Emergency Evacuation Procedures for Employees with Disabilities, as revised, are in place to evacuate any disabled employee from the laboratory area in an emergency.

ACCIDENTS

All laboratory standard operating procedures include control measures and emergency response procedures if there is fire, explosion, flooding, ventilation system shutdown, or any other natural catastrophe that may affect the chemicals in the laboratory. IF THERE IS AN ACCIDENT YOU ARE REQUIRED TO:
1) Call the GRC Dispatcher at 911 (internal GRC phone only) or from an external cell phone at 216 433 8888 (Plum Brook 419 621-3222) in the case of any accident.
3) A NASA C-1627 form is to be completed and sent to the SHeD Occupational Health Branch, Mail Stop 6-4 within 24 hours of the incident.

Report all accidents to the Environmental, Health, and Safety **HELPLINE at 3-8848 and Medical Services**. In addition, report all mishaps and close calls within 24 hrs. in the Incident Reporting Information System (IRIS). Even without an account, you can report an incident using the NASA Quick Incident Reporting Function at the bottom of the IRIS homepage.

A close call is an event which there is no injury or only minor injury requiring first aid and/or no equipment/property damage or minor equipment/property damage (less than $1000), but which possesses a potential to cause a mishap.

The **Management Integration Office** (MIO) carefully analyzes all mishap and close call reports to improve safety. A mishap investigation will be completed to determine cause and what should be done to prevent recurrence. Analysis of close calls allows the MIO to decide if there are preventive measures that could be established to reduce the number and severity of mishaps.

DRILLS

The **SHeD Operational Safety Branch** conducts annual emergency evacuation drills and recommends improvements in the evacuation method.

FIRST AID

If feasible, it is recommended that two people per work shift, within each laboratory or work area, have emergency first aid response training. First aid training shall include cardio-pulmonary resuscitation (CPR) and potentially Blood-Borne Pathogen awareness training

Unless otherwise specified in the standard operating procedure, follow these first aid and clean-up measures if there is an accident or major spill:

Step 1: Call the **GRC Dispatcher at 911 (internal GRC phone only) or from an external cell phone at 216 433 8888 (Plum Brook 419 621-3222)**, from a safe location.

Step 2: Unless otherwise specified, follow these interim first aid measures while waiting for help to arrive if there is chemical exposure:

Eye contact: Promptly flush eyes with potable water for a prolonged period (15 minutes minimum) and obtain medical attention.
Skin contact: Promptly flush the affected area with copious amounts of potable water for at least 15 minutes and remove any contaminated clothing. If symptoms persist after washing, obtain medical attention.
Inhalation: Remove victim to fresh air. If not breathing, give mouth-to-mouth resuscitation. Obtain medical attention.
Ingestion: Encourage the victim to drink large amounts of potable water. Obtain medical attention. Do not force liquids through the mouth of an unconscious person.

CHAPTER 4 - STORAGE

Store all chemicals properly. Refer to the Material Safety Data Sheet or obtain additional information where appropriate for special storage requirements of hazardous chemicals. Avoid storage of hazardous chemicals on bench tops and in hoods. Amounts of hazardous chemicals permitted for storage in the laboratory are to be as small as practical.

Store containers of hazardous chemicals in a well ventilated, limited access area. Avoid exposure of hazardous chemicals to heat or direct sunlight. Store hazardous chemical containers in appropriately labeled, unbreakable, chemically resistant, secondary containers whenever the material poses a high health or safety hazard. (Refer to the chapters in this plan: Moderately Chronic or Highly Acute Toxicity Materials and Highly Chronic Toxicity Materials.)

CHEMICAL INVENTORY

An inventory of hazardous chemicals, with the assistance or oversight from personnel designated by the **Chemical Management Team , will be conducted at the frequency described below**. During this inventory unneeded and unused items will be evaluated. If chemicals are no longer needed in the laboratory, properly discard the chemical (see the GRC Environmental Programs Manual, Chapter 5, Waste Disposal) or return it to the storeroom/stockroom. **Chemical Management** shall maintain the chemical inventory database as specified in the GRC Hazard Communication Program.

At PBS, support service contractor personnel are responsible for updating the chemical inventory at least annually and preferably as chemicals are added and deleted from the database.
The chemical inventory will be maintained through daily maintenance and at least a cyclical wall-to-wall inventory. Chemicals that exceed the manufacturer's expiration date must be properly disposed unless a signed waiver is requested and granted. A waiver will extend the chemical's expiration date for one year. After one year, the owner will need to request an extension to their waiver.

INCOMPATIBLE CHEMICALS

The term 'incompatible chemicals' refers to chemicals that can react with each other:

- Violently; or
- With evolution of substantial heat; or
- To produce flammable products; or
- To produce toxic products.

Handle, store and pack incompatible chemicals so that they cannot accidentally contact each other.

For guidelines for common laboratory chemicals that are incompatible and which need segregation refer to Tables 4-1 and 4-2. Table 4-1 lists general classes of compounds that require separate storage areas. Table 4-2 lists specific compounds that can pose reactivity hazards. Keep chemicals in each grouping in column A of each table separate from each grouping in column B.

TABLE 4-1: GENERAL CLASSES OF INCOMPATIBLE CHEMICALS

CHEMICAL GROUP (FAMILY)	INCOMPATABLE WITH:
Acids	Bases
Oxidizing agents[a] Chlorates Chromates Chromium trioxide Dichromates Halogens Halogenating agents Hydrogen peroxide	Reducing Agents[a] Ammonia, anhydrous and aqueous Carbon Metals Metal hydrides Nitrites Organic compounds Phosphorus

Nitric acid Nitrates Perchlorates Peroxides Permanganates Persulfates	Silicon Sulfur

[a] The examples of oxidizing and reducing agents illustrate common laboratory chemicals. They are not exhaustive.

TABLE 4-2: SPECIFIC CHEMICAL INCOMPATIBILITIES

CHEMICAL (GROUP)	INCOMPATABLE WITH:
Acetylene and monosubstituted acetylenes	Group IB and IIB metals and their salts
Halogens	Halogenating agents
Ammonia, anhydrous and aqueous	Halogens and Halogenating agents Mercury Silver
Alkali and alkaline earth Carbides Hydrides Hydroxides Metals Oxides and peroxides	Water Acids Halogenated organic compounds Halogenating agents Oxidizing agents
Azides, inorganic	Acids Heavy metals and their salts Oxidizing agents[a]
Cyanides, inorganic	Acids Strong bases
Mercury and its amalgams	Acetylene Ammonia, anhydrous and aqueous Nitric acid Sodium azide
Nitrates, inorganic	Acids Reducing agents[a]
Nitric acid	Bases Chromic acid Chromates Metals Permanganates Reducing agents Sulfides Sulfuric acid
Nitrites, inorganic	Acids Oxidizing agents[a]

[a] See list of examples in Table 4-1.

POTENTIALLY EXPLOSIVE CHEMICALS AND REAGENT COMBINATIONS

Table 4-3 lists some common classes of laboratory chemicals that have potential for producing a violent explosion when subjected to shock or friction. Table 4-3 also lists a few illustrative combinations of common laboratory reagents that can produce explosions when they contact each other or that give reaction products that can explode without any apparent external initiating action. This list is not exhaustive.

TABLE 4-3: SHOCK-SENSITIVE COMPOUNDS

- Alkyl nitrates, particularly polyol nitrates such as nitrocellulose and nitroglycerin
- Alkyl and acyl nitrites
- Alkyl perchlorates
- Amine metal oxosalts; metal compounds with coordinated ammonia, hydrazine, or similar nitrogenous donors and ionic perchlorate, nitrate, permanganate or other oxidizing group
- Azides, including metal, nonmetal and organic azides
- Chlorite salts of metals, such as $AgClO_2$ and $Hg(ClO_2)_2$
- Diazo compounds such as CH_2N_2
- Diazonium salts, when dry
- Fulminates (silver fulminate, AgCNO, can form in the reaction mixture from the Tollens' test for aldehydes if it is allowed to stand for some time. This can be prevented by adding dilute nitric acid to the test mixture as soon as the test has been completed.
- Hydrogen peroxide becomes increasingly treacherous as the concentration rises above 30%, forming explosive mixtures with organic materials and decomposing violently in the presence of traces of transition metals
- N-Halogen compounds such as difluoroamino compounds and halogen azides
- N-Nitro compounds such as N-nitromethylamine, nitrourea, nitroguanidine and nitric amide
- Oxo salts of nitrogenous bases: perchlorates, dichromates, nitrates, iodates, chlorites, chlorates, and permanganates of ammonia amines, hydroxylamine, guanidine, etc
- Perchlorate salts. Most metal, nonmetal and amine perchlorates can be detonated and may undergo violent reaction in contact with combustible materials
- Peroxides and hydroperoxides, organic
- Peroxides (solid) that crystallize from or are left from evaporation of peroxidizable solvents
- Peroxides, transition-metal salts
- Picrates, especially salts of transition and heavy metals, such as Ni, Pb, Hg, Cu and Zn. Picric acid is explosive but is less sensitive to shock or friction than its metal salts and is relatively safe as a water-wet paste
- Polynitroalkyl compounds such as tetranitromethane and dinitroacetonitrile
- Polynitroaromatic compounds, especially polynitro hydrocarbons, phenols and amines

WATER-REACTIVE CHEMICALS

Table 4-4 lists some common laboratory chemicals that react violently with water and that shall always be stored and handled so that they do not come into contact with liquid water or water vapor. These chemicals are prohibited from landfill disposal, even in a lab pack, because of the characteristic of reactivity.

TABLE 4-4: WATER-REACTIVE CHEMICALS

- Alkali metals
- Alkali metal hydrides
- Alkali metal amides
- Alkyl silanes
- Metal alkyls, such as lithium alkyls and aluminum alkyls
- Grignard reagents
- Halides of nonmetals, such as $POCl_3$, $SOCl_3$, SO_2Cl_2
- Inorganic halides, such as $POCl_3$, $SOCl_3$, SO_2Cl_2
- Anhydrous metal halides, such as $AlCl_3$, $TiCl_4$, $ZrCl_4$, $SnCl_4$
- Phosphorus pentoxide
- Calcium carbide
- Organic acid halides and anhydrides of low molecular weight

PYROPHORIC CHEMICALS

Store pyrophoric chemicals in tightly closed containers under inert atmosphere (or, for some, an inert liquid), and carry out all transfers and manipulations of them under an inert atmosphere or liquid. Pyrophoric chemicals cannot be put into a landfill because of the characteristic of reactivity. Table 4-5 contains a listing of some pyrophoric chemicals.

TABLE 4-5: PYROPHORIC CHEMICALS

- Alkyl silanes
- Grignard reagents
- Metal alkyls and aryls, such as R_3Al, R_2Zn
- Metal carbonyls, such as $Ni(CO)_4$, $Fe(CO)_5$, $Co_2(CO)_8$
- Metal powders, such as Al, Co, Fe, Mg, Mn, Pd, Ti, Sn, Zn, Zr
- Metal hydrides, such as NaH, $LiAlH_4$
- Nonmetal hydrides, such as B_2H_6 and other boranes, PH_3, AsH_3
- Nonmetal alkyls, such as R_3B, R_3P, R_3As
- Phosphorus (white)

PEROXIDE-FORMING CHEMICALS

Many common laboratory chemicals can form peroxides over time when exposed to air. A single opening of a container to remove some of the contents can introduce enough air for peroxide formation to occur. Some types of compounds form peroxides that are treacherously and violently explosive in concentrated solutions or as solids. Accordingly, never evaporate to dryness peroxide-containing liquids. Peroxide formation can also occur in many polymerizable unsaturated compounds, and these peroxides can initiate a runaway, sometimes explosive polymerization reaction. Any peroxidizable chemical with visible discoloration, crystallization, or liquid stratification shall be treated as potentially explosive. Call the Waste Management Team for immediate assistance. All containers of peroxide-forming chemicals shall be labeled with the date the chemical was received and the date the container was opened. Peroxide-forming chemicals shall not be distilled to dryness.

Table 4-6 provides a list of chemical moieties that are most likely to form peroxides. Please refer to the NASA Safety Standard for Explosives, Propellants and Pyrotechnics for a comprehensive list of peroxide forming chemicals: http://www.hq.nasa.gov/office/codeq/doctree/NASASTD871912.pdf.

TABLE 4-6: MOIETIES THAT CAN FORM ORGANIC PEROXIDES

1.Ethers and acetals with α-hydrogen	6.Vinyl alkynes with α-hydrogen	11.Secondary alcohols
2.Alkenes with alyllic hydrogen	7.Alkylalkynes with α-hydrogen	12.Ketones with α-hydrogen
3.Chloroalkenes, fluoroalkenes	8.Alkylalkynes with tertiary α-hydrogen	13.Aldehydes
4.Vinyl halides, esters, ethers	9.Alkanes and cycloalkanes with tertiary α-hydrogen	14.Ureas, amides and lactams with α-hydrogen atom on a carbon attached to nitrogen
5.Dienes	10.Acrylates, methacrylates	

Containers shall be used or discarded by the manufacturer's expiration date, if the expiration date is available. If there is no expiration date identified on the container, containers shall be tested or stored as described below:

- Test chemicals in Groups 1 through 7 (as identified in TABLE 4-6) within 12 months of receipt and every 6 months thereafter. Discard or deperoxidize if peroxides are detected.
- Test chemicals in Groups 8 through 14 (as identified in TABLE 4-6) within 12 months of opening and every 6 months thereafter. Discard or deperoxidize if peroxides are detected.
- Uninhibited chemicals shall be stored for $\leq$ 5 days.
- If inhibited, chemicals may be stored for 12 months.

Testing may be done using a peroxide detection test strip, follow manufacturer's directions.

Compounds listed in Tables 4-6 through 4-8 shall always be tested for peroxides prior to distillation.
Rusted or stuck caps on a container of peroxide-forming chemical shall not be forced.

TABLE 4-7: CHEMICALS THAT FORM POTENTIALLY EXPLOSIVE PEROXIDES WITHOUT CONCENTRATION[a]

Butadiene[b]	Chloroprene[c]
Divinyl acetylene	ILSOPropyl ether
Tetrafluoroethylene[b]	Vinylidene chloride

[a]Materials other than those listed may form peroxides.
[b]When stored in a inhabited liquid monomer.
[c]When stored in a liquid monomer.

Materials that may spontaneously form peroxides that will make the material shock- or heat-sensitive "on the shelf", without any further concentrations through evaporation or distillation shall have a three-month storage limit and they shall be stored under nitrogen.

TABLE 4-8: CHEMICALS THAT FORM POTENTIALLY EXPLOSIVE PEROXIDES ON CONCENTRATION[a,b]

Acetal	Acetaldehyde
Benzyl alcohol	2-Butanol
Cyclohexanol	2-Cyclohexen-1-ol
Cumene	Decahydronaphthalene
Diethyl ether	Diethylene glycol dimethyl ether (Diglyme)
Dioxanes	Ethylene glycol dimethyl ether (Glyme)
4-Heptanol	Methyl acetylene
Methyl isobutyl ketone	3-Methyl-1-butanol
Methyl cyclopentane	2-Pentanol
4-Pentene-1-ol	1-Phenylethanol
2-Phenylethanol	2-Propanol (iLSOPropanol)
Tetrahydrofuran	Tetrahydronaphthalene
Vinyl ethers	Other secondary alcohols

[a]Materials other than those listed may form peroxides.
[b]Warning! May become unstable if concentrated intentionally or accidentally by the user.

TABLE 4-9: CHEMICALS THAT AUTOPOLYMERIZE[a]

Acrylic acid	Acrylonitrile
Butadiene[b]	Chloroprene
Chlorotrifluoroethylene	Ethyl methacrylate
Styrene	Tetrafluoroethylene
Vinyl acetate	Vinyl acetylene
Vinyl chloride	Vinyl pyridine

[a]Materials other than those listed may form peroxides.
[b]When stored as a gas.

These compounds may autopolymerize (and thus explode) when relatively small quantities of peroxides are formed.

STORAGE UNITS

Chemical Storage Cabinets

A large variety of storage cabinets are on-site at GRC. Use these cabinets to store chemicals that are relatively inert, pose no undue hazard in storage and are compatible with other chemicals stored there.

Review the chemicals in all storage cabinets regularly (at least annually) for continued need. Address broken, leaking or bulging containers of chemicals immediately upon discovery. Make an evaluation to determine if the material needs repackaging with an appropriate label affixed or if the material needs disposal. At Lewis Field, complete a Form C-260a, Waste Disposal Request, to notify the **Waste Management Program Lead** that you wish to dispose of chemicals that are no longer used or needed. At PBS, complete a Form C-260a and send it directly to the Support Service Contractor Environmental Technician (4-3358) (do not send the form to Lewis Field). The Environmental Technician will assist with the disposal of chemicals that are no longer used or needed, and will ensure that the C-260a is sent to Waste Management.

Keep all storage cabinets in good working order. Clean all small spills and leaks immediately.

Flammable Storage Cabinets

Only flammable or combustible materials should be stored in flammable storage cabinets. Do not overload flammable cabinets with chemicals.

Because the risk of fire is great, do not vent flammable storage cabinets. Upon review by Chemical Hygiene Officer, ventilation of a flammable storage cabinet may be recommended if health hazards are determined to be more severe than the risk of fire. Do not store highly chronic toxicity materials in the same cabinet with other flammable materials.

Acid Cabinets

Acid cabinets shall have a spill catch and be of a material not easily attacked by the acid. Acid cabinets may be vented.

Not all acids are compatible for storage in the same cabinet. Be careful to store nitric acid in a cabinet away from chromic acids and sulfuric acids (See Table 4-2). In addition, Glacial Acetic Acid is considered an organic acid and should be stored in a flammable cabinet away from other acids and oxidizers.

Base Cabinets

Designate each corrosive cabinet as an acid or base cabinet. Contact the **Chemical Management Program Lead** for labeling needs. Base cabinets may be vented. The base cabinet shall also have a spill catch and be made of a material not easily attacked by the base. Never store both acids and bases in the same corrosive cabinet.

Corrosive Cabinets

Designate each corrosive cabinet as an acid or base cabinet. Contact the **Chemical Management Program Lead** for labeling needs. The acid cabinet shall also have a spill catch and be made of a material not easily attacked by the base. Never store both acids and bases in the same corrosive cabinet.

Refrigerators

There may be materials in use at the Center that are not stable at room temperatures. In these cases, a refrigerator or freezer is necessary for safe storage. There are also refrigerators used for chemical storage that merely extend the shelf life of contents. All chemical storage refrigerators shall be labeled, "**For Chemical Use Only**". **NO FOOD OR BEVERAGES** may be stored in refrigerators designated for chemical use. Standard Operating Procedures for the laboratory shall include all emergency procedures required for refrigerators during a power outage, if necessary to avoid a hazardous condition. These procedures may include providing a back-up power supply.

HAZBINS

HAZBINS are typically used to store chemicals outdoors. These storage units shall be inspected on a regular basis. Each lab that uses a HAZBIN shall include adequate instructions on their use in the Standard Operating Procedure.

CHAPTER 5 - WASTE DISPOSAL

GENERAL

The GRC Environmental Programs Manual, Chapter 5, Management of Hazardous Materials and Waste for Reuse, Recycling or Disposal, as revised, specifies how to collect, segregate, store and transport waste. Transport from the Center shall be in accordance with U.S. Department of Transportation (DOT) regulations. All laboratory workers shall comply with the proper disposal methods as stipulated in Chapter 5 of the Environmental Programs Manual.

DISCARDING CHEMICAL STOCK

Unlabeled containers of chemicals and solutions shall be properly labeled or shall undergo prompt disposal.

Before a worker's employment in the laboratory ends, return all the chemicals for which that person was responsible, with appropriate labeling, to storage or discard, or reassign to another laboratory worker.

If a chemical is still usable, consider listing the chemical in the chemical classified list so that another researcher might be able to use it. To add a chemical to the list contact the **Chemical Management Program Lead**.

METHOD OF DISPOSAL

Deposit chemical waste in appropriately labeled receptacles and follow all other waste disposal procedures of the Center. Use existing waste disposal programs. Do not use hoods as a means of disposal for volatile chemicals. Call the **Waste Management Program Lead at 3-2124(at PBS, contact the SHeD PBS Safety Branch)** with any questions on how to dispose of a hazardous chemical.

Use disposal by recycling or chemical decontamination when possible. Check with the **Waste Management Program Lead (at PBS, contact the SHeD PBS Safety Branch)** to ensure that procedures are acceptable and within the scope of the regulations as well as GRC policies.

FREQUENCY OF DISPOSAL

Remove waste from laboratories to a central waste area at least once per week. Remove waste from the central waste storage area at regular intervals established by the **Waste Management Team**.

DISPOSAL PLANS FOR SPECIFIC CHEMICAL CATEGORIES

At Lewis Field, complete a NASA **Form C-260a**, Waste Disposal Request, for disposal of chemicals. The form is available through the NASA web page URL http://forms.grc.nasa.gov/Forms/PublicUser/index.cfm.

Contact **Waste Management Program Lead at 3-2124** for proper disposal procedures (at PBS, contact the PBS Waste Management Team)

At PBS, complete a Form C-260a and send it directly to the Support Service Contractor Waste Technician (4-3358) (do not send the form to Lewis Field). The Waste Technician will assist with the disposal of chemicals that are no longer used or needed, and will ensure that the C-260a is sent to Waste Management.

DISPOSAL INTO THE SEWER

The Center will not tolerate indiscriminate disposal by pouring waste chemicals down the drain or adding them to mixed refuse for landfill burial. This behavior is unacceptable and illegal.

Do not discharge in the sewer concentrated acids or bases; highly toxic malodorous (bad smelling) or lachrymatory (tear causing) substances or any substance that might interfere with the biological activity of waste water treatment plants; create a fire or explosion hazard; cause structural damage or obstruct flow.

Follow all the procedures for disposal of chemicals as specified in the GRC Environmental Programs Manual, Chapter 5, Management of Hazardous Materials and Waste for Reuse, Recycling or Disposal.

CHAPTER 6 - SIGNS AND LABELS

SIGNS

Post prominent signs and labels of the following type in a conspicuous place:

- Emergency telephone numbers of emergency personnel, building managers, supervisors and laboratory workers;
- Identity labels showing contents of containers (including waste receptacles) and associated hazards;
- Location signs for safety showers, eyewash stations, other safety and first aid equipment, exits and areas where food and beverage consumption are permitted; and
- Warning at areas of equipment where special or unusual hazards exist.

The **SHeD Occupational Health Branch** can provide consultation on appropriate signage. It is the responsibility of the lab manager or supervisor to procure all signs.

CHEMICAL LABELS

Label all hazardous chemicals with the name of the chemical and the hazard warnings appropriate to the material. GRC labels are available from **Chemical Management**. Labels can also be requested using Form **NASA C-375** through the GRC web page URL http://forms.grc.nasa.gov/Forms/PublicUser?index.cfm.

All vats, tanks and other types of vessels containing hazardous chemicals shall be labeled in accordance with the **Hazard Communication Standard, 29 CFR 1910.1200**. A label or a placard containing the name of the chemical and the hazard warnings shall be displayed where it is unmistakably associated with the vessel.

CHAPTER 7 - HOUSEKEEPING, MAINTENANCE AND INSPECTIONS

HOUSEKEEPING

Laboratories shall be kept clean. All chemicals that are not being used shall be stored properly. Bench tops shall be kept clean and uncluttered. All fume hoods shall be kept clean and uncluttered.

Clean floors regularly. Clean bench tops immediately if contaminated. Dispose of all contaminated cleaning materials properly.

Do not use passageways, stairways and hallways as storage areas. Never block accesses to exits, emergency equipment and utility controls.

MAINTENANCE

Inspect eyewash fountains at intervals of not less than once per year. The flow rate of the eye wash station (0.4 gallons of potable water per minute) shall be checked during the inspection. The flow rate shall be available for a minimum of 15 minutes. The Institutional Maintenance Contractor shall conduct the inspections and record the results on tags attached to each eyewash fountain.

In addition to the annual inspection, plumbed eyewash stations shall be activated weekly by the users to verify proper operation (ANSI. Z 358.1-2009). The weekly test shall entail a quick activation of the eyewash station to ensure that water flow is unimpeded or that the water line has not been damaged or closed and that the temperature of the water is not too hot or too cold. Each eyewash station should have a checklist to ensure that it has been activated on a weekly basis and should be used to used to document the weekly check, An example of a Weekly Eyewash/Safety Shower form (Form C-196) is included as an appendix at the end of this document.

Test safety showers not less than once a year. The flow rate of the safety shower (20.0 gallons of potable water per minute) shall be checked during the inspection. This flow rate shall be available for a minimum of 15 minutes. The Institutional Maintenance Contractor shall conduct the inspections and record the results on tags attached to each safety shower. Inspect other safety equipment regularly; no less than once a year or when a new use arises. The **SHeD Occupational Health Branch** is available to confirm the proper operation of safety equipment when initially installed.

In addition to the annual inspection, plumbed safety showers shall be activated weekly by the users to verify proper operation (ANSI. Z 358.1-2009). The weekly test shall entail a quick activation of the safety shower to ensure that water flow is unimpeded or that the water line has not been damaged or closed and that the temperature of the water is not too hot or too cold. Each safety shower should have a checklist to ensure that it has been activated on a weekly basis and should be used to used to document the weekly check, An example of a Weekly Eyewash/Safety Shower form (Form C-196) is included as an appendix at the end of this document.

Test drench hoses not less than once a year. The flow rate of the safety shower (20.0 gallons of potable water per minute) shall be checked during the inspection. This flow rate shall be available for a minimum of 15 minutes. The Institutional Maintenance Contractor shall conduct the inspections and record the results on tags attached to each safety shower. Inspect other safety equipment regularly; no less than once a year or when a new use arises. The **SHeD Occupational Health Branch** is available to confirm the proper operation of safety equipment when initially installed.

In addition to the annual inspection, drench hoses shall be activated weekly by the users to verify proper operation (ANSI. Z 358.1-2009). The weekly test shall entail a quick activation of the safety shower to ensure that water flow is unimpeded or that the water line has not been damaged or closed and that the temperature of the water is not too hot or too cold. Each safety shower should have a checklist to ensure that it has been activated on a weekly basis and should be used to used to document the weekly check, An example of a Weekly Eyewash/Safety Shower form (Form C-196) is included as an appendix at the end of this document.

Eyewash bottles or other personal eyewash equipment shall be inspected at a frequency according to the manufacturer's directions and must ensure that the eyewash fluid is not expired. The user organization is responsible for setting up an inspection program and schedule.

The laboratory supervisor, the **Industrial Hygiene Program Lead or the Environmental Technician** will periodically inspect respirators for routine use and comply with the respirator selection and cartridge change schedule.

Follow all Glenn Research Center (GRC) lock-out/tag-out procedures, as appropriate.

INSPECTIONS

Hold formal housekeeping and chemical hygiene inspections at least semiannually for units that have frequent personnel changes and annually for others. Informal inspections are continual and need no announcement.

The cleaning contract organization, laboratory supervisors, resident support contractors, Area Safety Officers and the Chemical Hygiene Officer may conduct inspections.

RECORDS

Each laboratory shall maintain copies of all inspections.

CHAPTER 8 - ALLERGENS AND EMBRYO TOXINS

Follow these procedures along with all the previous standard operating procedures for work with substances known to be allergens or embryo toxins. Allergens are any substances that can induce or produce symptoms of an allergy. Embryo toxins are toxins that are harmful to the developing embryo with or without severely affecting the mother. Also included are reproductive toxins that target the human reproductive system. These may also include certain teratogens and mutagens.

ALLERGENS

Wear suitable gloves to prevent hand contact with allergens or substances of unknown allergenic activity. Take all precautions necessary to avoid incidental contact by any other person as well as yourself.

Disposable gloves are recommended but if reusable gloves are used, they shall be washed thoroughly using potable water after each use and before removing. If potable water hand wash facilities are not available inside the lab, disposal gloves shall be worn and discarded before exiting the lab. Hands should then be washed as soon as practical after exiting the lab. Have laboratory coats laundered after each use. Wash hands and arms thoroughly with soap and potable water as soon as practical after working with known or suspected allergens.

EMBRYO AND REPRODUCTIVE TOXINS

If you are a person of childbearing age, consult a physician and/or the **Industrial Hygiene Program Lead: Reproductive Hazards** for exposure evaluation and risk assessment. These substances should only be handled in a hood with confirmed satisfactory performance, using appropriate protective apparel (especially gloves) to prevent skin contact.
Review each use of these materials with the research supervisor and review continuing use annually or whenever a procedural change occurs. Notify supervisors of all incidents of exposure or spills; consult a qualified physician when appropriate.

Disposable gloves are recommended but if reusable gloves are used, they shall be washed thoroughly using potable water after each use and before removing. If potable water hand wash facilities are not available inside the lab, disposal gloves shall be worn and discarded before exiting the lab. Hands should then be washed as soon as practical after exiting the lab. Wash hands and arms thoroughly with soap and potable water as soon as practical after working with embryo toxins.

Store these substances, properly labeled, in an adequately ventilated area in an unbreakable secondary container.

Follow all additional procedures specified for particular embryo toxins, such as mercury or mercury compounds. Contact the **Industrial Hygiene Program Lead** for program information.

CHAPTER 9 - MODERATELY CHRONIC OR HIGHLY ACUTE TOXICITY MATERIALS

The aim of these additional procedures is to minimize exposure to these toxic substances by any route using all reasonable precautions. These additional procedures are appropriate for substances with moderate chronic toxicity, which are chemicals, other than the types specified as highly chronic (see Chapter 10 in this plan), that have a chronic hazard.

These precautions also apply to substances with high acute toxicity, which are chemicals that meet any of the following criteria:

- A chemical that has a median lethal dose (LD50) of 50 milligrams or less per kilogram of body weight when administered orally to albino rats weighing between 200 and 300 grams each.
- A chemical that has a median lethal dose (LD50) of 200 milligrams or less per kilogram of body weight when administered by continuous contact for 24 hours (or less if death occurs within 24 hours) with the bare skin of albino rabbits weighing between two and three kilograms each.
- A chemical that has a median lethal concentration (LC50) in air of 200 parts per million by volume or less of gas or vapor, or 2 milligrams per liter or less of mist, fume, or dust, when administered by continuous inhalation for one hour (or less if death occurs within one hour) to albino rats weighing between 200 and 300 grams each.

Toxicity information is often available on the Material Safety Data Sheet (MSDS). If not, contact the **Chemical Management Program Lead** for information. Request a MSDS using **NASA Form C-377** through the GRC web page (URL http://forms.grc.nasa.gov/informedwebpages/Glenn-NumericForms.cfm)

LOCATION

Use and store these substances only in areas of restricted access with special warning signs. Always use a hood (previously evaluated to confirm adequate performance with a face velocity of between 80 to 120 linear feet per minute) or other containment device for procedures that may result in the generation of aerosols or vapors.

PERSONAL PROTECTION

Always avoid skin contact by use of gloves impermeable to the chemical and long sleeves (and other protection as appropriate). Reusable gloves shall be washed thoroughly using potable water after each use and before removing. If potable water hand wash facilities are not available inside the lab, disposal gloves shall be worn and discarded before exiting the lab. Hands should then be washed as soon as practical after exiting the lab. Have laboratory coats laundered after each use. Always wash hands and arms thoroughly with soap and potable water as soon as practical after working with these materials.

RECORDS

Maintain records of the amounts of these materials on hand, amounts used, and the names of the workers involved. Submit an update of any changes to these records to the **Chemical Hygiene Officer (MS 6-4)** (at PBS, contact the SHeD Operational Safety Branch for guidance) on an annual basis, at minimum.

PREVENTION OF SPILLS AND ACCIDENTS

Be prepared for accidents and spills. Ensure that at least 2 people are always present if a compound in use is highly toxic or of unknown toxicity. Follow all spill and clean-up guidelines as found in the laboratory standard operating procedures for small bench top spills.

If a major spill occurs outside the hood, evacuate the area and call the **GRC Dispatcher at 911 (internal GRC phone only) or from an external cell phone at 216 433 8888 (Plum Brook 419 621-3222)**, for proper spill cleanup.

Store breakable containers of these substances in chemically resistant trays; also work and mount apparatus above such trays or cover work and storage surfaces with removable, absorbent, plastic backed paper.

WASTE

Thoroughly decontaminate or incinerate contaminated clothing or shoes. Collect and dispose of properly all wastes generated in the decontamination process. Contact the **Waste Management Program Lead** at 3-2124 (at PBS, the Support Service Contractor Environmental Technician at 4-3358) for assistance. Store contaminated waste in closed, suitably labeled, impervious containers.

SPECIFIC HAZARDOUS MATERIAL INSTRUCTIONS

Follow all additional procedures or requirements as specified for a particular hazardous material as found in GRC Environmental Programs Manual or Glenn Safety Manual. The following hazardous materials have specific additional instructions:

Asbestos, Chapter 2, GRC Occupational Health Programs Manual, as revised

Explosives, Propellants and Pyrotechnics, Chapter 18, Glenn Safety Manual**,** as revised

Hydrogen, Chapter 6, Glenn Safety Manual**,** in revision

Hazardous Materials, Chapters 5, 6, 22, and 23, GRC Environmental Programs Manual as revised

Oxygen, Chapter 5, Glenn Safety Manual**,** as revised

Radiation Protection Programs, Chapter 8, 9 and 10 GRC Occupational Health Programs Manual**,** as revised

CHAPTER 10 - HIGHLY CHRONIC TOXICITY MATERIALS

Further supplemental rules to be followed, along with all those mentioned in the previous sections, for work with substances of known highly chronic toxicity that are:

"select carcinogens" or human carcinogens or substances with high carcinogenic potency in animals that are considered to be a carcinogen if:

(a) It has been evaluated by the International Agency for Research on Cancer (IARC), and found to be a carcinogen or potential carcinogen; or,
(b) It is listed as a carcinogen or potential carcinogen in the Annual Report on Carcinogens published by the National Toxicology Program (NTP, latest edition); or,
(c) It is regulated by OSHA as a carcinogen
(d) It is a listed as a carcinogen by ACGIH.
(e) It is listed as a carcinogen by NIOSH.
(f) It is listed as a carcinogen by EPA.

reproductive toxins which are toxins that target the human reproductive system; category that may also include certain teratogens and mutagens

mutagenic toxins which are any of a number of chemical compounds able to induce mutations in DNA and in living cells

teratogenic toxins which are reproductive toxins that damage the fetus during its development

neurotoxins which include any substance that can damage nerve cells.

(See OHPM Chapter 22 on Reproductive and Developmental Hazards for more information.

Toxicity information is often available on the Material Safety Data Sheet (MSDS). If not, contact the **Chemical Management Program Lead** for information. Request a MSDS using **NASA Form C-377** through the GRC web page (URL http://forms.grc.nasa.gov/informedwebpages/Glenn-NumericForms.cfm)

CONTROLLED AREA

Conduct all transfers and work with these substances in a "controlled area". Controlled areas can also be a restricted access hood, glove box or portion of a lab designated for use of highly toxic substances. All people with access need awareness of the hazards of the substances being used in the controlled area and the necessary precautions.

Storage

Only store containers of these chemicals in a ventilated, limited access area in appropriately labeled, unbreakable, chemically resistant, secondary containers.

Glove boxes

For a negative pressure glove box, ventilation rate shall be at least 2 volume changes/hour and pressure at least 0.5 inches of water. For a positive pressure glove box, thoroughly check for leaks before each use. In either case, trap the exit gases or filter them into the hood.

Signs and Labels

Ensure that the controlled area markings are conspicuous with warning and restricted access signs. Also ensure that the labeling of all containers of these substances is appropriate with identity and warning labels.

Decontamination

Protect vacuum pumps against contamination by scrubbers or HEPA filters and vent them into the hood. Decontaminate vacuum pumps or other contaminated equipment, including glassware, in the hood before removing them from the controlled area.

Decontaminate the controlled area before normal work resumes there.

Before leaving a controlled area, remove any protective apparel (placing it in an appropriate, labeled container). Reusable gloves shall be washed thoroughly using potable water after each use and before removing. If potable water hand wash facilities are not available inside the lab, disposal gloves shall be worn and discarded before exiting the lab. Hands should then be washed as soon as practical after exiting the lab. Thoroughly wash hands, forearms, face and neck with soap and potable water as soon as practical after working with these materials.

Use a wet mop or a vacuum cleaner equipped with a HEPA filter instead of dry sweeping if the toxic substance was a dry powder. Dispose of contaminated cleaning materials properly.

Spills

Ensure that contingency plans, equipment and materials to minimize exposures of people and property in case of accident are available. Follow all procedures established in the laboratory standard operating procedures.

SPECIFIC HAZARDOUS MATERIAL INSTRUCTIONS

Follow all additional procedures or requirements as specified for a particular hazardous material as found in Glenn Safety Manual, or GRC Environmental Programs Manual. The following hazardous materials or classifications have specific additional instructions:

OSHA Regulated Materials, Chapter 24, GRC Occupational Health l Program Manual, as revised
Lead Program, Chapter 5, GRC Occupational Health Program Manual, as revised
Cadmium Program, part of Chapter 24, GRC Occupational Health Program Manual, as revised.
Reproductive and Developmental Hazards, Chapter 22 of the Occupational Health Programs Manual.

Refer to Chapter 16 of this plan for a listing of additional medical surveillance programs available.

MEDICAL SURVEILLANCE

When using toxicologically significant quantities of such a substance on a regular basis (for example, 3 times per week), consult the **Industrial Hygiene Program Lead** concerning the necessity and/or desirability of regular medical surveillance.

RECORDS

Keep accurate records of the amounts of these substances stored and used, as well as the dates used and names of users. Records shall be available to the Chemical Hygiene Officer for review.

WASTE

Use chemical decontamination whenever possible. Always transfer containers of contaminated waste (including washings from contaminated flasks) in a secondary container under the supervision of authorized personnel. Contact the **Waste Management Program Lead at 3-2124 (at PBS, the Support Service Contractor Environmental Technician at 4-3358)** for assistance with disposal of all waste materials.

CHAPTER 11 - HAZARD IDENTIFICATION

Each user is responsible for minimizing the risk for each process performed in the laboratory. Perform high risk operations in the smallest scale to reduce the hazard. Contact the Chemical Hygiene Officer for assistance.

MATERIAL SAFETY DATA SHEETS (MSDS)

Each laboratory shall maintain access to the MSDSs for each hazardous material found in the laboratory.

MSDSs are maintained electronically through the GRC web page http://msds.grc.nasa.gov and are readily available for anyone who is working in, visiting or inspecting the laboratory facility. PBS has a chemical inventory database which contains electronic MSDSs for the chemicals used and stored on station. Contact SHeD PBS Operational Safety Branch personnel for more information.

To obtain a paper copy of a MSDS from the **Chemical Management Program Lead,** submit a NASA Form C-377 request through the GRC web page (URL http://forms.grc.nasa.gov/Forms/PublicUser/index.cfm).

Production of a chemical substance for another user outside the laboratory requires complying with the Hazard Communication Standard (29 CFR 1910.1200) including the requirements for preparation of a material safety data sheet and proper labeling.

PROCEDURES FOR WRITING AN MSDS

The employee (researcher) is to fill out all the information on the MSDS form, NASA-C-10007. This form is available through the GRC web page http://forms.grc.nasa.gov/informedwebpages/Glenn-NumericForms.cfm

The MSDS package sent to the **Chemical Management Program Lead (MS 6-4)** is to include the following:

- The completed MSDS form.
- The formulation which includes the chemicals and the percentage by weight or volume. Also include any process methods if needed.
- All constituent raw material MSDSs.
- Any additional information available on product or raw material.

Send the completed MSDS package to the **Chemical Management Program Lead, MS 6-4**.

The **Chemical Management Program Lead** will then review the MSDS. The **Chemical Management Program Lead** may use other reviewers if necessary.

The formulator will then receive a reviewed and numbered MSDS. The **Chemical Management Program Lead** keeps a copy of the MSDS with the review package in its central file as required by OSHA.

Any changes to the formulation of a product will require that the MSDS be reviewed to determine if a revision will be necessary.

LABELS

Labels shall consist of the product name, which shall match the name on the MSDS and the chemical inventory, hazard warnings and the GRC name and address. The Hazard Communication Standard (29 CFR 1910.1200) including the labeling requirements applies to all chemicals produced for use outside the laboratory.

Each laboratory worker is to ensure that labels on incoming containers of hazardous chemicals remain on the container and are legible. Each laboratory worker is to ensure that all chemicals in the laboratory have proper labels. This includes all chemicals that the laboratory worker makes and stores. If labels are needed contact the **Chemical Management Program Lead** or submit a **NASA Form C-375** request through the GRC web page (http://forms.grc.nasa.gov/Forms/PublicUser/index.cfm).

INVENTORY

Each user is responsible to minimize the volume of chemicals stored. In addition, the user is responsible to minimize the waste generated by each process. Any change in the inventory requires the user to complete a Chemical Inventory Usage Form, **NASA-C-3032** and submit the completed form to the **Chemical Management Program Lead**. Form C-3032 is available on the GRC web site at http://forms.grc.nasa.gov/Forms/PublicUser/index.cfm. The **Chemical Management Program Lead** analyzes and maintains the results of the chemical inventory database. At PBS, support service contractor personnel are responsible for updating the chemical inventory; the SHeD **SHeD Occupational Health Branch** assesses the inventory data as necessary.

Take extra care when moving chemicals to or from the laboratory. Use secondary unbreakable containers for moving or storing hazardous chemicals. Label all chemicals moved out of the laboratory in accordance with OSHA 29 CFR 1910.1200, Hazard Communication Standard. Contact **Chemical Management** for proper labeling.

Direct any question about the chemical inventory to the **Chemical Management Program Lead, MS 6-**.

HAZARD ASSESSMENT AND EXPOSURE MONITORING

LSOPs are reviewed by an Industrial Hygiene Program Lead: Hazard Assessment. When extremely or highly hazardous materials, such as an OSHA regulated chemical, a non-regulated carcinogen, a reproductive hazard, etc., are being used, exposure monitoring may be scheduled depending upon use conditions, amount, frequency, controls and other factors. Refer to OHPM Chapter 21 for more information.

CHAPTER 12 - LABORATORY PERMITS AND RISK ASSESSMENT

PERMITTING

It may not be necessary for each laboratory to have a Safety Permit for general laboratory operations. However, certain specific operations or chemicals within the laboratory that pose a significant risk may require a Safety Permit. Refer to the Glenn Safety Manual, Chapter 1A, Safety Permit System for additional information.

RISK ASSESSMENT

Each Laboratory Manager is responsible for initiating the Safety Permit Review process for each chemical laboratory under his/her area of responsibility. It is the responsibility of the Area Safety Committee to determine whether or not a Safety Permit will be issued for a particular laboratory process. If a Safety Permit is determined to be appropriate, the risk assessment procedures in the Glenn Safety Manual, Chapter 1A, Safety Permit System, will be followed. When issued, the expiration date for the Safety Permit shall also be the expiration date for the LSOP.

RESTRICTED LABORATORIES

Special restrictions will be placed on laboratories using the following:

Chemicals defined as 'select carcinogens' in 29 CFR 1910.1450;

Chemicals known or suspected to cause reproductive toxicity;

Chemicals known or suspected to be mutagenic';

Chemicals known or suspected to be teratogenic;

Chemicals which are known to change in hazards upon aging or have a specific shelf life (example: chemicals which form peroxides that may cause death, serious injury or mission loss); or

Laboratories with Class 1 chemicals, which are chemicals that may cause death, serious injury or mission loss.

These chemicals shall be used in the restricted area only. Any planned use of these chemicals outside of the restricted area shall be approved by the Glenn supervisor and the appropriate signs and labels shall be posed in the area.

Signs and Placards shall be displayed at all entry points to the 'controlled area'.

ACCESS TO RESTRICTED LABORATORIES

Access to restricted laboratories will be limited to the laboratory personnel assigned to the laboratory and trained in the hazards and use of the chemicals. Short term access will be permitted for cleaning, security, safety and environmental personnel as necessary to perform their duties.

TRAINING

All persons entering a restricted laboratory shall have completed appropriate training relative to the potential hazards of the material in the laboratory. Suitable training for the individuals will be determined by the supervisor.

SPECIAL SIGNS AND PLACARDS

The outside of a restricted laboratory shall display the following information:

Risk assessment hazard classification;

Name of the chemical(s);

Type of hazard(s) for each chemical listed;

Responsible party;

Designated area of use;

Emergency actions and notifications; and

Appropriate warning signs and placards.

DURATION

Restricted laboratories will be reviewed at minimum on an annual basis to determine if the status has changed. Laboratory workers can request the chemical Hygiene Officer to review a restricted area for reclassification when highly toxic chemicals have been removed and are no longer used.

DISPOSAL

Disposal of the chemical and/or materials contaminated by the chemical shall be in accordance with the stipulations of the permit and the Environmental Management Program Lead.

RECORDS

Inventory records of usage shall be recorded on NASA C-3032 form and sent to **Chemical Management** , MS 6-4. Records cam be maintained within each laboratory by one designated individual within a multi-user laboratory.

CHAPTER 13 - LABORATORY DESIGN

Depending on the type of research to be conducted, consideration shall be given for each laboratory facility to have:

Two exits for each laboratory;

An appropriate general ventilation system with air intakes and exhausts located so as to avoid intake of contaminated air;

Adequate, well-ventilated stockrooms/storerooms;

Laboratory hoods and sinks;

A fire extinguisher;

Other safety equipment including eyewash fountains and drench showers, each supplied with potable water; and

Proper equipment and procedures for waste disposal.

MAINTENANCE

Chemical hygiene related equipment (hoods, incinerator, etc.) shall undergo continuing appraisal by laboratory personnel, supervisors and/or industrial hygienists and be modified if inadequate.

USAGE

The work conducted and its scale shall be appropriate to the physical facilities available and, especially, to the quality of ventilation.

VENTILATION

The laboratory ventilation system shall provide a source of fresh air for breathing and for intake to local ventilation devices.

Do not rely on the system alone for protection from toxic substances released into the laboratory.

To prevent any increase of air concentrations of toxic substances during the working day the ventilation system will ensure the continual replacement of laboratory air.

The system will direct air flow into the laboratory from non laboratory areas and out to the exterior of the building.

Hoods

A laboratory hood with 2.5 feet of hood space per person shall be provided for every 2 workers if they spend most of their time working with chemicals. Each hood shall have a continuous monitoring device to allow convenient confirmation of adequate hood performance before use. If this is not possible, avoid work with substances of unknown toxicity or provide other types of local ventilation devices.

Other local ventilation devices

Provide ventilated storage cabinets, canopy hoods, snorkels, etc. as needed. Each canopy hood and snorkel shall have a separate exhaust duct.

Special ventilation areas

Pass exhaust air from glove boxes and isolation rooms through scrubbers or other treatment before release into the regular exhaust system. Cold rooms and warm rooms shall have provisions for rapid escape and for escape if there is electrical failure.

Modifications

Make any alteration of the ventilation system only if thorough testing indicates that worker protection from airborne toxic substances will continue to be adequate. Contact the **Industrial Hygiene Program Lead** for air testing on any alteration.

Performance

A rate of 4-12 room air changes/hour is normally adequate general ventilation if using local exhaust systems such as hoods as the primary method of control.

Quality

General air flow shall be relatively uniform throughout the laboratory and not turbulent. There shall be no high velocity or static areas. Air flow into and within the hood shall not be exceedingly turbulent. Hood face velocity shall be adequate (typically 80-120 feet per minute).

Evaluation

Evaluations of laboratory hoods shall be conducted according to the provisions of Chapter 7 of the Occupational Health Program Manual, Local Exhaust Ventilation.

CHAPTER 14 - CHEMICAL PROCUREMENT AND DISTRIBUTION

PROCUREMENT

Before receiving a substance, all those involved in its use shall be familiar with the information on proper handling, storage and disposal. Accept no container without an adequate identifying label. All the procedures outlined in the GRC Occupational Health Programs Manual, Chapter 14, Acquisition of Hazardous Chemicals and Materials, as revised, are to be followed. **Chemical Management Program Lead** reviews and releases all purchase requests for all chemicals and hazardous materials at Lewis Field.

STOCKROOMS/STOREROOMS

Segregate toxic substances in a well-identified area with local exhaust ventilation. Place chemicals that are highly toxic or other chemicals with open containers in unbreakable secondary containers. Examine stored chemicals periodically (at least annually) for replacement or disposal based on deterioration and container integrity.

Do not use stockrooms/storerooms as preparation or repackaging areas. Make storerooms/stockrooms readily accessible during normal working hours. Designate one person to control the storeroom/stockroom.

DISTRIBUTION

Place the container in a secondary container or bucket when hand carrying chemicals. Use freight-only elevators whenever possible when transporting chemicals.

CHAPTER 15- ENVIRONMENTAL MONITORING

MONITORING FOR WORKPLACE ENVIRONMENTAL EXPOSURE

Any GRC employee (civil servant, support service contractor or tenant) may request air sampling by contacting the **Industrial Hygiene Program Lead**.

Air monitoring may be performed as a result of a ventilation survey, a safety permit request or renewal, or when airborne contaminants may pose a respiratory hazard.

The GRC Safety Health and Environmental Division has a number of programs that have trigger mechanisms in place to determine when to conduct monitoring of employee exposures to hazardous chemicals.

Conducting of evaluations will occur when an action level is met or exceeded.

RESULTS

The requester or affected employees will receive the results of environmental monitoring. The area monitored will also display the posted results.

MONITORING FOR ENVIRONMENTAL COMPLIANCE

Air Emissions

Typical hoods used in laboratory operations are sources of air emissions. For most purposes, these emission activities are considered "trivial" by regulatory agencies. When the emission rate from the hood exceeds one pound per day for specific chemicals, an air permit may be required. Regardless of the chemicals used or rate of emission in any laboratory hood, accurate inventory records need to be maintained. These records may be used in the calculation of total emission rates for the entire Center for annual discharge fees. All questions regarding air permitting or the use of specific chemicals shall be directed to the **Environmental Management Program Leads at Lewis Field and at PBS**.

Water Discharges

The Center will not tolerate indiscriminate disposal by pouring waste chemicals down the drain or adding them to mixed refuse for landfill burial. This behavior is unacceptable and illegal.

Do not discharge into the sewer concentrated acids or bases; highly toxic malodorous (bad smelling) or lachrymatory (tear causing) substances or any substance that might interfere with the biological activity of waste water treatment plants; create a fire or explosion hazard; cause structural damage or obstruct flow. All questions regarding the discharge of any chemical to sewers shall be directed to the **Environmental Management Program Leads at Lewis Field and at PBS**.

Waste Disposal

See Chapter 5 in this plan, Waste Disposal, and Chapter 5 of the Environmental Programs Manual for issues dealing with the disposal of chemicals. Contact the **Waste Management Program Lead at 3-2124** with any questions on how to dispose of any chemical (at PBS contact the Waste Management PBS Team).

CHAPTER 16 - OCCUPATIONAL MEDICINE PROGRAM

COMPLIANCE WITH REGULATIONS

Occupational Medical Services, as described in the GRC Occupational Health Programs Manual, Chapter 24, Occupational Safety and Health Administration Regulated Materials Program, as revised, performs regular medical surveillance at Lewis. This surveillance often surpasses the extent required by regulations.

The Laboratory Line Manager/Supervisor shall provide all employees who work with hazardous chemicals an opportunity to receive medical attention, including any follow-up examinations which the examining physician determines to be necessary, under the following circumstances:

- Whenever an employee develops signs or symptoms associated with a hazardous chemical to which the employee may have been exposed in the laboratory, the employee shall be provided an opportunity to receive an appropriate medical examination.
- Where exposure monitoring reveals an exposure level routinely above the action level (or in the absence of an action level, the PEL) for an OSHA regulated substance for which there are exposure monitoring and medical surveillance requirements, medical surveillance shall be established (as described in the Specific Medical Programs listed below) for the affected employee as prescribed by the particular standard.
- Whenever an event takes place in the work area such as a spill, leak, explosion or other occurrence resulting in the likelihood of a hazardous exposure, the affected employee shall be provided an opportunity for a medical consultation. Such consultation shall be for the purpose of determining the need for a medical examination.

All medical examinations and consultations shall be performed by or under the direct supervision of a licensed physician and shall be provided without cost to the employee, without loss of pay and at a reasonable time and place.

The Laboratory Line Manager/Supervisor shall provide the following information to the physician:

- The identity of the hazardous chemical(s) to which the employee may have been exposed;
- A description of the conditions under which the exposure occurred including quantitative exposure data, if available; and
- A description of the signs and symptoms of exposure that the employee is experiencing, if any.

For any medical examination or consultation required due to the circumstances described above, the Laboratory Line Manager/Supervisor shall obtain a written opinion from the examining physician which shall include the following:

- Any recommendation for further medical follow-up;
- The results of the medical examination and any associated tests;
- Any medical condition which may be revealed in the course of the examination which may place the employee at increased risk as a result of exposure to a hazardous workplace; and
- A statement that the employee has been informed by the physician of the results of the consultation or medical examination and any medical condition that may require further examination or treatment.

The written opinion shall not reveal specific findings of diagnoses unrelated to occupational exposure.

SPECIFIC MEDICAL PROGRAMS ADMINISTERED BY OCCUPATIONAL MEDICAL SERVICES

Specific medical programs developed by Occupational Medical Services exist for the following:

- Arsenic Surveillance Program
- Asbestos Surveillance Program
- Cadmium Surveillance Program
- General Medical Surveillance Program
- Hearing Conservation Program
- Lead Surveillance Program
- Mercury Surveillance Program
- Respiratory Protection Program
- Soldering Certification Program

Contact **Industrial Hygiene Program Lead** for appropriate exposure monitoring, evaluation and referral to Occupational Medical Services, if appropriate, for any known or suspected chemical exposures.

FIRST AID

Emergency Medical Service (EMS) is available by dialing **GRC Dispatcher at 911 (internal GRC phone only) or from an external cell phone at 216 433 8888 (Plum Brook 419 621-3222)**.

CHAPTER 17 - TRAINING AND INFORMATION

The aim of training and information is to ensure that all individuals at risk know about the work in the laboratory, its risks and what to do if an accident occurs.

TRAINING PROGRAM

A general training program is presented a minimum of annually for new GRC laboratory employees. The program consists of review of the laboratory standard, awareness of the GRC Chemical Hygiene Policy as well as training in personal protective equipment and emergency procedures. All laboratory workers shall attend this general training program.

All new laboratory employees shall also attend the Hazard Communication (HAZCOM) Standard General Training program. This program outlines the HAZCOM regulation, defines what an MSDS is and how to read one, identifies several labeling styles that manufacturers use, and identifies what an employee needs to know and do to work safely with hazardous chemicals.

Content of training

The following information is to be presented in initial and refresher training. As a minimum, employees shall be informed of:

- The contents of 29 CFR 1910.1450. The standard and it's appendices shall be made available to employees;
- The contents of this Laboratory Chemical Hygiene Plan shall be made available to employees;
- The location and availability of this Laboratory Chemical Hygiene Plan;
- The permissible exposure limits for OSHA regulated substances or recommended exposure limits for other hazardous chemicals where there is no applicable OSHA standard;
- Signs and symptoms associated with exposures to hazardous chemicals used in the laboratory;
- The location and availability of reference material on the hazards, safe handling, storage and disposal of hazardous chemicals found in the laboratory including, but not limited to, Material Safety Data Sheets received from the chemical supplier; and
- Methods and observations that may be used to detect the presence or release of a hazardous chemical.

Supervisors Training Responsibilities

Supervisors will ensure that new employees are trained on the specific hazards of the chemicals in the laboratory, laboratory standard operating procedures and sources for more information on the hazards of chemicals.

Supervisors will ensure that all appropriate laboratory employees are trained on the specific hazards of any new chemical that comes into the laboratory.

The supervisor may conduct additional general training of employees on several topics pertinent to laboratory employee's safety and health. The **Chemical Management Program Lead** can provide information and assistance on training topics.

These topics are to include but not be limited to:

Material Safety Data Sheets (MSDSs) and labeling
Supervisors will ensure that their employees know the location and content of all relevant MSDS for the hazardous materials in the laboratory, how to read and understand the MSDSs and labels for the hazardous chemicals in the laboratory and when an MSDS and/or label needs to be written by the laboratory employee and assist the employee in writing the MSDS and/or label properly.

New chemicals
Supervisors will ensure that employees know the physical and health hazards; proper personal protective equipment and apparel; proper storage; spill procedures; accident response; disposal procedures and all other

procedures and precautions for each new hazardous chemical at the time the chemical arrives into the laboratory. The supervisor will also ensure that an employee is trained when a new chemical is created.

Emergency and Personal Protection Training

Every laboratory worker shall know the location and proper use of available protective apparel and equipment. Training classes are available for personal protective apparel through the GRC training schedule.

Training (such as CPR, Fire Extinguisher Use, Choking Charlie, and First Aid Instruction) is highly recommended and encouraged for every laboratory worker.

Receiving and stockroom/storeroom personnel shall know about the chemical hazards, handling equipment, protective apparel and relevant regulations.

FREQUENCY OF TRAINING

The training and education program is to be a regular, continuing activity not simply an annual presentation. General Laboratory Standard training which reviews the regulation and the GRC policy and program shall be attended by each laboratory personnel at a minimum of once every three years. Specialized training will be available on an as needed basis.

Additional retraining shall also be conducted whenever a periodic inspection reveals, or whenever there is reason to believe, that there are deviations from or inadequacies in the employee's knowledge of proper lab safety practices or procedures. The retraining shall reestablish employee proficiency and introduce new or revised practices and procedures, as necessary.

INFORMATION

Literature and consulting advice concerning chemical hygiene are readily available to laboratory personnel for their use. Contact the **Chemical Hygiene Officer at MS 6-4**, for assistance.

CHAPTER 18 - RECORDS

The **Management Integration Office** retains mishap investigation records.

The **Chemical Hygiene Plan** records document that the GRC has policies and procedures that are compatible with current knowledge and regulations.

The **Chemical Management Program Lead** maintains the chemical inventory database and usage records as provided by the user and as verified by regular inventory audits.

The **Occupational Medical Services** retains medical records in accordance with the requirements of state and federal regulations.

The **Energy and Environmental Management Office** maintains the environmental monitoring records.

The **Organization Development and Training Office** maintains the training records.

REFERENCES

Glenn Research Center Emergency Preparedness Plan, as revised

Glenn Research Center Environmental Programs Manual, as revised.

Glenn Safety Manual, as revised.

NASA-STD-8719.12 – Safety Standard for Explosives, Propellants and Pyrotechnics

LIST OF CONVENIENT URL ADDRESSES:

Environmental, Health, and Safety Help Line 3-8848
http://smo.grc.nasa.gov/helpline.asp

Label Request C-375
http://forms.grc.nasa.gov/Forms/PublicUser/index.cfm

Glenn Research Center Environmental Programs Manual
http://smad-ext.grc.nasa.gov/shed/pub/epm/epm-manual.pdf

Glenn Safety Manual
http://smad-ext.grc.nasa.gov/shed/pub/gsm/gsm-manual.pdf

MSDS Request C-377
http://forms.grc.nasa.gov/Forms/PublicUser/index.cfm

Waste Disposal Request C-260a
http://forms.grc.nasa.gov/Forms/PublicUser/index.cfm

APPENDIX A

Sample
Weekly eyewash/safety shower/drench hose test log

Weekly Test: Activate plumbed eyewash and/or shower sufficiently to verify that-

1.) An adequate flow of water is available at the shower head or eye/face wash nozzles.
2.) Water is clean, free of particles or sediment, and is not too cold or too hot (60-100°F).
3.) Initial and date form only if both 1.) & 2.) are satisfied.

Date (mm/dd/yy)		Initials of tester	Date (mm/dd/yy)		Initials of tester
__/ __ /____	(1)	_____	__/ __ /____	(27)	_____
__/ __ /____	(2)	_____	__/ __ /____	(28)	_____
__/ __ /____	(3)	_____	__/ __ /____	(29)	_____
__/ __ /____	(4)	_____	__/ __ /____	(30)	_____
__/ __ /____	(5)	_____	__/ __ /____	(31)	_____
__/ __ /____	(6)	_____	__/ __ /____	(32)	_____
__/ __ /____	(7)	_____	__/ __ /____	(33)	_____
__/ __ /____	(8)	_____	__/ __ /____	(34)	_____
__/ __ /____	(9)	_____	__/ __ /____	(35)	_____
__/ __ /____	(10)	_____	__/ __ /____	(36)	_____
__/ __ /____	(11)	_____	__/ __ /____	(37)	_____
__/ __ /____	(12)	_____	__/ __ /____	(38)	_____
__/ __ /____	(13)	_____	__/ __ /____	(39)	_____
__/ __ /____	(14)	_____	__/ __ /____	(40)	_____
__/ __ /____	(15)	_____	__/ __ /____	(41)	_____
__/ __ /____	(16)	_____	__/ __ /____	(42)	_____
__/ __ /____	(17)	_____	__/ __ /____	(43)	_____
__/ __ /____	(18)	_____	__/ __ /____	(44)	_____
__/ __ /____	(19)	_____	__/ __ /____	(45)	_____
__/ __ /____	(20)	_____	__/ __ /____	(46)	_____
__/ __ /____	(21)	_____	__/ __ /____	(47)	_____
__/ __ /____	(22)	_____	__/ __ /____	(48)	_____
__/ __ /____	(23)	_____	__/ __ /____	(49)	_____
__/ __ /____	(24)	_____	__/ __ /____	(50)	_____
__/ __ /____	(25)	_____	__/ __ /____	(51)	_____
__/ __ /____	(26)	_____	__/ __ /____	(52)	_____

JOHN H. GLENN RESEARCH CENTER
CHEMICAL MANAGEMENT TEAM

HAZCOM PROGRAM

TABLE OF CONTENTS

CHAPTER	TITLE	PAGE
	Introduction	ii
	Change Record	v
1.0	Material Safety Data Sheet Plan	1
2.0	Chemical Inventory Plan	5
3.0	Chemical Labeling Plan	7
4.0	HAZCOM Training Plan	9
5.0	Multi-Employer Workplace Requirements Plan	11

INTRODUCTION

OSHA HAZARD COMMUNICATION STANDARD

The Occupational Safety and Health Administration (OSHA) codified the Hazard Communication Standard in Title 29, Code of Federal Regulations (CFR), Part 1910.1200. This final rule applies to workplaces where employees are exposed to hazardous chemicals. On July 25, 1986, OSHA ruled that, pursuant to Executive Order 12196, all Federal agency heads were required to comply, by May 23, 1988, with the OSHA Hazard Communication Standard.

The Hazard Communication Standard (HAZCOM) is based on a simple concept - that employees have both a need and a right to know the hazards and identities of the chemicals they are exposed to when working. They also need to know what protective measures are available to prevent adverse effects from occurring. The HAZCOM is designed to provide employees with the information they need.

The HAZCOM also defines the need for each covered facility to develop a Written Hazard Communication Program (29 CFR 1910.1200(e)). This document, the NASA Glenn Research Center HAZCOM Program, fulfills the requirements for a written program specified in the OSHA standard.

NASA GLENN RESEARCH CENTER HAZARD COMMUNICATION POLICY

The Glenn Research Center (GRC) Occupational Health Programs Manual (OHPM), Chapter 25, outlines the Center's policy about Hazard Communication. The definition of the authorities and responsibilities are in a manner that allows flexibility to adjust the program to the specific needs of each work area.

NASA GLENN RESEARCH CENTER HAZCOM PROGRAM

Scope and Application

This document establishes the NASA Glenn Research Center (GRC) written hazard communication program. The GRC HAZCOM Program applies to any chemical which is known to be present in the workplace in such a manner that employees may be exposed under normal conditions of use or in a foreseeable emergency.

GRC HAZCOM Program applies to laboratories only as follows:

- GRC personnel shall ensure that labels on incoming containers of hazardous chemicals are not removed or defaced;

- GRC personnel shall maintain any material safety data sheets (MSDS) that are received with incoming shipments of hazardous chemicals, and ensure that they are readily accessible during each work shift to laboratory employees when they are in their work areas;

- GRC personnel, including Safety and Health Division (SHeD) and line supervisors, shall ensure that laboratory employees are provided information and training; and,

- Laboratory employers that ship hazardous chemicals are considered to be either a chemical manufacturer or a distributor under HAZCOM, and shall ensure that any containers of hazardous chemicals leaving the laboratory are labeled, and that a material safety data sheet is provided to distributors and other employers.

In work operations where employees only handle chemicals in sealed containers which are not opened under normal conditions of use (such as are found in marine cargo handling, warehousing, or retail sales), this section applies to these operations only as follows:

- GRC personnel shall ensure that labels on incoming containers of hazardous chemicals are not removed or defaced;

- Chemical Management shall maintain copies of any MSDS that are received with incoming shipments of the sealed containers of hazardous chemicals, shall obtain a material safety data sheet as soon as possible for sealed containers of hazardous chemicals received without a material safety data sheet if an employee requests the MSDS, and shall ensure that the material safety data sheets are readily accessible during each work shift to employees when they are in their work area(s); and,

- GRC personnel shall ensure that employees are provided with information and training.

The GRC HAZCOM Program **does not** apply to:

- Any hazardous waste as such term is defined by the Solid Waste Disposal Act, as amended by the Resource Conservation and Recovery Act of 1976, as amended (42 U.S.C. 6901 et seq.), when subject to regulations issued under that Act by the Environmental Protection Agency;

- Any hazardous substance as such term is defined by the Comprehensive Environmental Response, Compensation and Liability ACT (CERCLA) (42 U.S.C. 9601 et seq.) when the hazardous substance is the focus of remedial or removal action being conducted under CERCLA in accordance with the Environmental Protection Agency regulations.

- Tobacco or tobacco products;

- Wood or wood products, including lumber which will not be processed, where the chemical manufacturer or importer can establish that the only hazard they pose to employees is the potential for flammability or combustibility (wood or wood products which have been treated with a hazardous chemical covered by this standard, and wood which may be subsequently sawed or cut, generating dust, are not exempted);

- Article; Article means a manufactured item other than a fluid or particle, which is formed to a specific shape or design during manufacture or which has an end use function dependent in whole or in part upon its shape or design during end use and which under normal conditions of use does not release more that very small quantities and does not pose a health risk to employees.

- Food or alcoholic beverages which are sold, used, or prepared in a retail establishment (such as a grocery store, restaurant, or drinking place), and foods intended for personal consumption by employees while in the workplace;

- Any drug, as that term is defined in the Federal Food, Drug, and Cosmetic Act (21 U.S.C. 301 et seq.), when it is in solid, final form for direct administration to the patient (e.g., tablets or pills); drugs which are packaged by the chemical manufacturer for sale to consumers in a retail establishment (e.g., over-the-counter drugs); and drugs intended for personal consumption by employees while in the workplace (e.g., first aid supplies);

- Cosmetics which are packaged for sale to consumers in a retail establishment, and cosmetics intended for personal consumption by employees while in the workplace;

- Any consumer product or hazardous substance, as those terms are defined in the Consumer Product Safety Act (15 U.S.C. 2051 et seq.) and Federal Hazardous Substances Act (15 U.S.C. 1261 et seq.) respectively, where the employer can show that it is used in the workplace for the purpose intended by the chemical manufacturer or importer of the product, and the use results in a duration and frequency of exposure which is not greater than the range of exposures that could reasonably be experienced by consumers when used for the purpose intended;

- Nuisance particulates where the chemical manufacturer or importer can establish that they do not pose any physical or health hazard covered under this section;

- Ionizing and non-ionizing radiation; and,

- Biological hazards.

GRC has developed, implemented, and maintained this written hazard communication program:

1. Describing how GRC manages MSDSs (Chapter 1.0);
2. Providing a list of hazardous chemicals (Chapter 2.0);
3. Describing how GRC manages labels and other forms of warning (Chapter 3.0);
4. Describing how GRC manages employee HAZCOM training (Chapter 4.0); and
5. Describing how GRC complies with the Multi-employer worksite requirements (Chapter 5.0).

Other requirements for a written hazard communication program are described in other sources. These details can be found in the following areas:

1. Methods for informing employees of the hazards of non-routine tasks - Glenn Safety Manual Chapters on Safety Permits (1A), Confined Space Entry (16), Lockout/Tagout (9), and others as appropriate and
2. Requirements for Multi-employer workplaces - all on-site support service contractors tenant organizations are expected to follow all GRC health, safety and environmental policies, including HAZCOM. Employees of on-site support service contractors and tenant organizations are offered access to all of the same information as the NASA civil servants. This includes access to MSDS', safe work practices/precautionary measures and information about the GRC labeling system.

The GRC HAZCOM Program is a regular, continuing effort, not merely a standby or short-term activity. All GRC civil service employees at Lewis Field and Plum Brook Station, part-time and summer employees, along with tenant organization employees and on-site support service contract employees are expected to follow its recommendations. This Program is designed to meet the requirements of 29 CFR 1910.1200(e): Written hazard communication program. The GRC HAZCOM Program Lead will review this program annually to ensure that the procedures continue to meet the needs of the Center and comply with current regulations.

Change Record

Rev.	Effective Date	Description
D	8/22/03	Revision
E	11/22/03	Revision
F	2/1/05	Revision
G	06/2006	Revision
H	5/2010	Revision
I	11/2011	Revision
J	11/2012	Revision

NASA GLENN RESEARCH CENTER
HAZCOM PROGRAM

CHAPTER 1 - MATERIAL SAFETY DATA SHEET PLAN

Purpose
The purpose of the MSDS Plan is to define the methods used at the Glenn Research Center (GRC) to comply with the OSHA MSDS requirements in 29 CFR 1910.1200(g).

Scope
The scope of the MSDS plan is for all hazardous chemicals used by employees at GRC including civil servants, summer interns and part-time employees, tenants and contractors at both Lewis Field and the Plum Brook Station (PBS), an MSDS will be available for review.

MSDS Program
This MSDS Plan defines how GRC manages MSDSs and how the information on the MSDS is communicated to the employees. The MSDS program shall comply with all aspects of the Hazard Communication Standard as it relates to the Material Safety Data Sheets.

Chemical manufacturers and importers are required to obtain or develop a MSDS for each hazardous chemical they produce or import. Distributors are responsible for providing GRC a copy of the MSDSs. GRC shall have an MSDS for each hazardous chemical that is used on site. GRC may rely on the information received from our suppliers.

The following information describes how GRC manages this requirement.

Material Safety Data Sheets

There is no specified format for the MSDS under the standard, although there are specific information requirements. OSHA has developed a non-mandatory format, OSHA Form 174, which may be used by chemical manufacturers and importers to comply with the rule.

The MSDS shall be in English and have the following information:

1. The identity used on the container label;
   a. if the hazardous chemical is a single substance, its chemical and common name
   b. if the hazardous chemical is a mixture which has been tested as a whole to determine its hazards, the chemical and common name(s) of the ingredients which contribute to these known hazards, and the common name(s) of the mixture itself
   c. if the hazardous chemical is a mixture which has not been tested as a whole:
      - the chemical and common name(s) of all ingredients which have been determined to be health hazards, and which comprise 1% or greater of the composition, except that chemicals identified as carcinogens under paragraph (d) of this section shall be listed if the concentrations are 0.1% or greater; and,
      - Chemical and common name(s) of all ingredients which have been determined to be health hazards, and which comprise less than 1% (0.1% for carcinogens) of the mixture, if there is evidence that the ingredient(s) could be released from the mixture in concentrations which exceed an established OSHA permissible exposure limit or ACGIH Threshold Limit Value, or could present a health risk to employees; and,
      - The chemical and common name(s) of all ingredients which have been determined to present a physical hazard when present in the mixture;
2. Physical and chemical characteristics of the hazardous chemical (such as vapor pressure, flash point);
3. Physical hazards of the hazardous chemical, including the potential for fire, explosion, and reactivity;
4. Health hazards of the hazardous chemical, including signs and symptoms of exposure, and any medical conditions which are generally recognized as being aggravated by exposure to the chemical;
5. Primary route(s) of entry (exposure);
6. OSHA permissible exposure limit, ACGIH Threshold Limit Value, and any other exposure limit used or recommended by the chemical manufacturer, importer, or employer preparing the material safety data sheet, where available;

7. Whether the hazardous chemical is listed in the National Toxicology Program (NTP) Annual Report on Carcinogens (latest edition) or has been found to be a potential carcinogen in the International Agency for Research on Cancer (IARC) Monographs (latest editions), or by OSHA;
8. Any generally applicable precautions for safe handling and use which are known to the chemical manufacturer, importer or employer preparing the material safety data sheet, including appropriate hygienic practices, protective measures during repair and maintenance of contaminated equipment, and procedures for clean-up of spills and leaks;
9. Any generally applicable control measures which are known to the chemical manufacturer, importer or employer preparing the material safety data sheet, such as appropriate engineering controls, work practices, or personal protective equipment;
10. Emergency and first aid procedures;
11. Date of preparation of the material safety data sheet or the last change to it; and,
12. Name, address and telephone number of the chemical manufacturer, importer, employer or other responsible party preparing or distributing the material safety data sheet, who can provide additional information on the hazardous chemical and appropriate emergency procedures, if necessary.

The role of MSDSs under HAZCOM is to provide detailed information on each hazardous chemical, including its potential hazardous effects, its physical and chemical characteristics, and recommendations for appropriate protective measures. MSDSs are readily accessible to employees when they are in their work areas during their work shifts.

Obtaining Material Safety Data Sheets (MSDSs)

MSDSs are obtained from the supplier at either the time a chemical is ordered or upon arrival. GRC Procurement obtains MSDSs for orders placed through the SAP purchasing system. Bankcard users are required to obtain MSDSs for all chemicals ordered with their bankcard. The MSDS is sent to Chemical Management to be uploaded. Chemical Management reviews each MSDS for completeness and conformance to OSHA's requirements in 29 CFR 1910.1200(g)(2). MSDSs that pass this scrutiny are then scanned into an electronic database (http://SHeDapps.grc.nasa.gov/msds/home.cfm/) for Center-wide access.

GRC personnel may request MSDSs for chemicals used and stored that are not on the MSDS web site through the GRC Intranet (URL address: http://forms.grc.nasa.gov/Forms/PublicUser/index.cfm, Material Safety Data Sheet (MSDS) Request (NASA C-377 form)). All requests for MSDSs are documented using date received and date delivered.

MSDS Binders

MSDS binders may be maintained by the user if electronic access to http://SHeDapps.grc.nasa.gov/msds/home.cfm/ is not available. In those specific instances, if requested, Chemical Management will assist in creating and maintaining a current MSDS binder. All other work areas are to use the electronic database (http://SHeDapps.grc.nasa.gov/msds/home.cfm/) for access to MSDS information. All MSDS binders are considered uncontrolled and may be used for reference only and will be designated as such.

GRC Generated MSDSs

All hazardous chemicals that are generated by employees at GRC and which leave the center, are transferred to other people at the Center or are transferred between Lewis Field and PBS shall have an MSDS. If no MSDS exists for the material, one shall be written before the material is permitted to be transferred.

Form NASA-C10007 (available at http://forms.grc.nasa.gov/Forms/PublicUser/index.cfm) is to be initiated by the creator of the hazardous chemical, listing as much information about the substance as possible. This information is sent to Chemical Management (MS 6-4 or electronically) along with a copy of the MSDS for each raw material.

A complete hazard determination, as required by 29 CFR 1910.1200(d), is then conducted by Chemical Management and other Safety, Health and Environmental Division (SHeD) specialties as needed. A NASA MSDS number will be assigned to the completed MSDS. No MSDS without a NASA MSDS number is valid. The approved MSDS will then

be returned to the originator with a paper copy kept in the Chemical Management central file. The MSDS will also be scanned into the electronic database.

All NASA generated MSDSs will be updated as soon as possible after new information becomes available on applicable chemicals.

MSDS Maintenance

Material Safety Data Sheets Storage

Chemical Management maintains the central MSDS file for all hazardous chemicals at GRC. All MSDSs are stored in a computer database. The database stores the images of the MSDS. This database is backed up nightly on the SHeD server and is stored off site on a redundant server. If it goes down, the redundant server kicks in.

.

Updating MSDSs

MSDSs are updated whenever a new MSDS is received. At GRC, the MSDSs on file are reviewed by the Chemical Management Team with every chemical MSDS receipt to ensure that each MSDS is the most current available.

Responsibilities

Chemical Management (at Lewis Field)

- Obtain and maintain the central MSDS files.
- Scan and maintain all MSDSs in the Lewis Field database.
- Train employees and supervisors on MSDSs and the MSDS program.

Plum Brook Operations and Maintenance Contractor

- Train employees and supervisors on MSDSs and the MSDS program.
- Send all MSDSs received with chemicals to the Chemical Management Team.

Supervisors

- Ensure that, employees have access to the GRC MSDSs web site during all work shifts.
- Ensure that employees have read and understood the information on the MSDS for all hazardous chemicals that the employee will encounter at the work site.
- Although the use of hardcopy binders is discouraged, ensure that any MSDS binders have an MSDS Waiver.
- Ensure that copies of all MSDSs are sent to Chemical Management at GRC.

Chemical Users

- Know how to access the MSDSs on line or in the PBS electronic master MSDS database.
- If access to online or electronic MSDSs is not available, know who to contact.
- Read MSDSs and understand the information needed to work with the hazardous chemicals safely.

Monitoring Program

The MSDS plan shall be reviewed annually. The MSDS central files shall be updated whenever a new MSDS is received. The GRC MSDS online database shall be updated whenever a new MSDS is received.

CHAPTER 2 - CHEMICAL INVENTORY PLAN

Purpose
The purpose of the chemical inventory plan is to establish how hazardous chemicals will be tracked and managed at the NASA Glenn Research Center (GRC). This plan ensures the accuracy of the Chemical Management System (CMS), which supports the Hazard Communication Program at GRC. The Safety & Mission Assurance Directorate (SMAD) Annual Operating Agreement (AOA) supports the commitment of GRC to have an accurate inventory by an agreement with NASA Headquarters.

Scope
The scope of the Chemical Inventory Plan is applicable for all hazardous chemicals used by employees at GRC including civil servants, summer and part-time temporary employees, tenants and contractors at both Lewis Field and the Plum Brook Station (PBS).

Inventory Requirements

Receipt of Chemicals
At Lewis Field, chemicals are shipped to the users from either store stock supply, chemical receiving, or in the case of bulk liquids, are delivered directly to the storage/use area. Both operations are a part of the Logistics and Technical Information Division of GRC. Chemicals that are shipped to the end user from store stock and/or chemical receiving are bar-coded before shipment and a copy of the barcode with the chemical name, requestor name, and destination are sent to the Chemical Management for entry into the database. Receiving will send a copy of the barcode with the Order for Supplies document to Chemical Management for database entry. At PBS, chemicals are shipped to requestors from Shipping and Receiving by support service contractor (SSC) shipping and receiving personnel.

Personnel Training and Certification
Individuals performing field audits at GRC are required to have, at minimum, General Hazard Communication Training, sufficient training with Personal Protective Equipment (PPE), and General Laboratory Standard Training. The Hazard Communication Officer based on the conditions of the environment being inventoried may recommend additional training. Additional training may include Respirator Training, Hearing Conservation Training and Hazardous Waste Operations and Emergency Response Training.

Safety Precautions
Laboratory and other work areas at GRC require an individual to wear proper PPE such as protective gloves, safety goggles, safety shoes, hard hats, earplugs and respiratory protective equipment while working in the area. SHeD will determine what PPE is required for each work area that is being inventoried. All individuals involved in the process of inventory will comply with the specifications as required in the NASA GRC buddy system.

Tools, Equipment and Materials
The following tools, equipment and materials are required to perform field audits:
scanners:
SHeD, Chemical Management System;
Federal Barcode labels;
Pager or equivalent form of communication;
PPE (as required for work area); and
Building floor plans.

Instructions
Instructions on the proper procedures of the Lewis Field Chemical Management System are documented by SHeD.

Method and Frequency
A complete wall-to-wall chemical inventory will be conducted cyclically over a four year period at Lewis Field. At PBS, the entire chemical inventory list is updated by SSC personnel at least annually.

Web Access
To maintain and manage the Chemical Inventory for GRC, NASA forms C-3032and 260a are provided on the http://forms.grc.nasa.gov/Forms/PublicUser/index.cfm website for the owners/users of chemicals to inform SHeD of any containers disposed, transferred or moved at GRC.

SHeD also structures a system to minimize the amount of containers stored at the Center. The Chemical Exchange Program is a way for researchers to get rid of any unused chemicals. Researchers that are in need of chemicals can obtain them through the Chemical Exchange Program. To request or offer a chemical to the Chemical Exchange Program, contact SHeD or review the CHEMEX database at http://SHeDapps.grc.nasa.gov/chemex/home.cfm

Responsibilities

Supervisor
- Ensure that employees are aware and follow the chemical inventory procedures.
- Ensure that SHeD is notified of any changes in inventory due to disposal or transfer to another location.

Employee
- Provide chemical information to the Chemical Management for tracking.
- Notify CM (at PBS, SSC personnel) of any and all changes to the inventory due to disposal or transfer.
- Notify WM and CM of expired chemicals that require disposal or notify CM to obtain an expired chemical waiver.

Logistic and Technical Information Division (Lewis Field only)
- Bar-code all hazardous chemicals before shipment to user.
- Provide CM with information on bar-coded chemicals and name and location of users.

Monitoring Program
CM shall monitor the effectiveness of the chemical inventory program and determine the accuracy of the inventory.

Review Process
This Chemical Inventory Plan shall be reviewed by CM annually.

CHAPTER 3 - CHEMICAL LABELING PLAN

Purpose
The purpose of the Chemical Labeling Plan is to ensure that containers of hazardous chemicals are labeled, tagged, or marked with the identity of the material and appropriate hazard warnings.

Scope
This plan applies to all on-site work locations at both Lewis Field and Plum Brook Station.

Labeling Program
Chemical Management ensures that each container of hazardous chemicals in the workplace is labeled, tagged or marked with the following information:

- Identity of the hazardous chemical(s) contained therein; and,
- Appropriate hazard warnings, or alternatively, words, pictures, symbols, or combination thereof, which provide at least general information regarding the hazards of the chemicals, and which, in conjunction with the other information immediately available to employees under the hazard communication program, will provide employees with the specific information regarding the physical and health hazards of the hazardous chemical.

GRC personnel uses signs, placards, process sheets, batch tickets, operating procedures, or other such written materials in lieu of affixing labels to individual stationary process containers. The written materials are readily accessible to the employees in their work area throughout each work shift.

Workers are not required to label portable containers into which hazardous chemicals are transferred from labeled containers, and which are intended only for the immediate use of the employee who performs the transfer.
Each chemical user is to ensure that labels on incoming containers of hazardous chemicals are not removed or defaced. Any employee handling hazardous chemicals shall notify Chemical Management when incoming containers require labeling.

Each laboratory worker is to ensure that a proper label is placed on all chemicals that the laboratory worker makes or stores. All personnel handling hazardous chemicals shall request appropriate labels from the CM for use on incoming chemicals, single use or transfer containers if the chemicals are not properly labeled.

If the chemical substance is produced for another user outside of the laboratory, the laboratory employee shall comply with the Hazard Communication Standard (29 CFR 1910.1200) including the labeling requirements. An employee preparing samples for use by another laboratory shall request appropriate labels and MSDSs from the CM and apply the labels prior to shipment.

GRC ensures that labels or other forms of warning are legible, in English, and prominently displayed on the container, or readily available in the work area throughout each work shift.

HAZCOM Labeling Criteria
Labels shall be legible and specify the proper chemical or trade name and details concerning the hazard, such as: Flammability (Red Color Bar or Diamond); Health (Blue Color Bar or Diamond) and Reactivity (Yellow Color Bar or Diamond) as defined by the applicable Material Safety Data Sheet (MSDS). In addition, Target Organ Hazards (if available) along with the appropriate personnel protective pictograms shall be present.

Exemptions to the above labeling include prepackaged manufacturers' containers authorized for shipment by the DOT, chemicals that contain mixtures, which may use generic labels, and Hazardous Waste containers governed by the Resource Conservation and Recovery Act (RCRA) labeling standards. The HAZCOM Program Lead will determine other exemptions.

All hazardous materials and chemicals to be used in the laboratory shall be properly labeled. Containers applicable to this plan are anticipated to comprise either single use, transfer containers, unless they are intended only for the immediate use of the employee who performs the transfer, manufacturers' containers with damaged or removed labels, or Aboveground or Underground Storage Tanks (AST's/UST's).

GHS compliant labels may also be used to satisfy these requirements.

Chemical Receiving
Chemical manufacturers, importers, and distributors of hazardous chemicals are all required to provide the appropriate labels and material safety data sheets to the employers to which they ship the chemicals. The information is to be provided automatically. Every container of hazardous chemicals received shall be labeled, tagged, or marked with the required information. Suppliers shall also send a properly completed material safety data sheet (MSDS) at the time of the first shipment of the chemical, and with the next shipment after the MSDS is updated with new and significant information about the hazards.

GRC personnel are not required to affix new labels to comply with this section if existing labels already convey the required information.

Single Use/Transfer Container Labeling
HAZCOM warning labels shall be affixed to any bag, bottle, box, can, cylinder, drum, storage tank, or like container of hazardous chemicals. Labeling will specify all pertinent data as specified in the HAZCOM Labeling Criteria above.

Exemptions to container labeling will be those containers which due to physical limitation cannot have all of the aforementioned hazard warnings, such as small chemical samples. Exempted containers shall, however, be identified by some appropriate means; i.e., by chemical name as a minimum. All hazard data or appropriate MSDS shall accompany the sample when shipped to another location. Temporary containers that are intended only for the immediate use of the employee who performs the transfer are also exempt from labeling.

Aboveground/Underground Storage Tank Labeling
All AST's/UST's containing hazardous chemicals will be labeled to meet HAZCOM requirements. AST's shall have the National Fire Protection Association (NFPA) fire diamond displayed in a location on the tank clearly visible to employees and emergency responders, the proper chemical name, and a 7"x10" HAZCOM label (minimum size) for operating personnel describing the hazards and personnel protective equipment.

UST's will also be similarly labeled, except a permanent sign, displayed in a location at or near the tank, shall be used to communicate all the pertinent hazard warnings. Tanks not affected by this plan include nonflammable gases or liquids, except cryogenic liquids, and nontoxic gases or liquids.

Labeling Review Process
The HAZCOM Program Lead shall review each label created by Chemical Management for completeness and accuracy. Chemical Management shall maintain review forms.

Responsibilities:

Chemical Management
- Ensure that all hazardous chemical container labels are in compliance with this plan.
- Perform an initial assessment of the work areas to determine work area labeling requirements.
- Perform audits to ensure labels for hazardous chemicals are in compliance.
- Supply labels for the containers.

Supervisors and Employees
- Ensure that hazardous chemicals are properly labeled.
- Notify CM when labels are needed.

Monitoring Program
The CM will perform periodic audits to ensure compliance with this plan. The plan may be modified or updated based on the results of these audits.

CHAPTER 4 - HAZCOM TRAINING PLAN

Purpose
The purpose of the Hazard Communication (HAZCOM) Training plan is to define the methods and availability of training for the GRC employees.

Scope
The scope of the HAZCOM Training plan is for all employees at GRC including civil servants, summer interns and part-time temporary employees, tenant and contractor employees at Lewis Field and the Plum Brook Station.

Training Requirements

General
Chemical Management provides all GRC civil servants, summer and part-time temporary employees, tenant and contractor employees with general HAZCOM training on their initial assignment. General training consists of the HAZCOM standard, the contents of and how to read a Material Safety Data Sheet (MSDS), how to read labels, the GRC written policy and program, chemical inventory, and the people to contact for any applicable information regarding the standard. Each employee with routine chemical exposures shall refresh general HAZCOM training at least once every three years. Office and other personnel with only isolated exposures to chemicals do not need to attend refresher training.

Chemical Specific Training
GRC personnel shall know about the hazards of the specific chemicals that they work with and safe handling and use of those chemicals. Supervisors are responsible for ensuring that the employees have the proper information and a safe work environment. SHeD can assist supervisors with specific chemical training.

Video Library
A library of HAZCOM related videos is available for use at the GRC Learning Center. Videos are reviewed regularly by Chemical Management and the Learning Center and updated or expanded as needed.

Employee Training
Chemical Management staff members who are responsible for training employees also attend training to develop and improve training skills.

Responsibilities

Chemical Management
- Ensure that the training materials are current and available to all employees.
- Ensure that employees and supervisors are trained.
- Ensure training is provided to employees and supervisors.

Supervisors
- Ensure that employees are properly trained.
- Ensure that employees are trained before new chemicals are used.
- Ensure that new employees are trained before unsupervised work with hazardous chemicals.
- Ensure that employees know how to obtain an MSDS.

Employees
- Attend training as required.
- Do not work with chemicals unless aware of the hazards, personal protective equipment and apparel and proper emergency responses.
- Know how to obtain a MSDS.

Human Capital Development Division

- Maintain training records for civil servants.
- Ensure that proper facilities are available for training classes.

Monitoring Program

This training plan shall be reviewed by Chemical Management annually.

CHAPTER 5 - MULTI-EMPLOYER WORKPLACE REQUIREMENTS PLAN

Purpose
The purpose of the Multi-Employer Workplace Requirements Plan is to define how NASA GRC complies with 29 CFR 1910.1200(e)(2).

Scope
The scope of the Multi-Employer Workplace Requirements Plan applies to all employers at GRC including NASA, tenant organizations, and support service contractors at Lewis Field and the Plum Brook Station (PBS).

Requirements
GRC is an employer who produces, uses, or stores hazardous chemicals in such a way that the employees of other employer(s) may be exposed (for example, employees of a construction contractor working on-site). This chapter addresses how GRC hazard communication program addresses the Multi-Employer HAZCOM requirements, specifically the following:

1. The methods that GRC will use to provide the other employer(s) on-site access to Material Safety Data Sheets (MSDSs) for each hazardous chemical the other employer(s)' employees may be exposed to while working;
2. The methods that GRC will use to inform the other employer(s) of any precautionary measures that need to be taken to protect employees during the workplace's normal operating conditions and in foreseeable emergencies; and,
3. The methods that GRC will use to inform the other employer(s) of the labeling system used in the workplace.

Program

MSDS Availability
NASA GRC makes the MSDSs of all NASA purchased chemicals available to all employees of any employer through the electronic MSDS database (http://SHeD.grc.nasa.gov/msds/) for chemicals used and stored at Lewis Field. Any employee can access an MSDS for a NASA chemical by searching this database. At PBS, all employees can access MSDSs through the electronic master MSDS database for PBS. If an employee does not have computer access, uncontrolled paper copies will be provided upon request (see Chapter 1of this HAZCOM Program).

Precautionary Measures
NASA GRC provides instructions for employee precautions through the chapters of the following manuals:

- Environmental Programs Manual (http://smad-ext.grc.nasa.gov/SHeD/pub/epm/epm-manual.pdf),
- Occupational Health Programs Manual (http://smad-ext.grc.nasa.gov/SHeD/pub/ohpm/ohpm-manual.pdf), and
- Glenn Safety Manual (http://smad-ext.grc.nasa.gov/SHeD/pub/gsm/gsm-manual.pdf).

Programs defined in these manuals cover items such as the Chemical Hygiene, hazardous chemical acquisition, OSHA regulated chemicals, respiratory protection, indoor air quality, use of the NASA GRC Safety Permit, Confined Space Entry, Lockout/Tagout, and others. All employees can access these manuals for information regarding precautionary measures needed for specific tasks.

Labeling System
The NASA GRC labeling system is defined in Chapter 3 of this HAZCOM Program.

Monitoring Program
This Multi-Employer Workplace Requirements Plan chapter shall be reviewed annually. The written Hazard Communication Program for other employers shall be reviewed to assure that these requirements are included. The review will be conducted upon the initial start of work at NASA GRC and annually thereafter.