GLENN RESEARCH CENTER, SAFETY MANUAL
TABLE OF CONTENTS

NOTE: The revisions to these Chapters will be maintained and approved by the Safety and Health Division (SHeD). The published dates and the expiration dates are listed in the columns next to each chapter. If you are referencing paper copies, please verify that it is the most current version before use. Users of this manual should be cognizant of other documents such as the Environmental Programs Manual and Occupational Health Programs Manual.

Chapter	Title	Published Date	Expiration Date
Chapter 1	Safety & Health Management System	6/2010	6/2012
Chapter 1A	Glenn Safety Permit System	5/2010	5/2012
Chapter 2	Safety, Health and Environmental Training	5/2012	5/2014
Chapter 3	Facility System Safety	9/2010	9/2012
Chapter 4	Student Safety and Health	5/2011	5/2013
Chapter 5	Oxygen	12/2012	12/2014
Chapter 6	Hydrogen	6/2010	6/2012
Chapter 7	Pressure Systems Safety	12/2012	12/2014
Chapter 8	Electrical Systems Safety	6/2011	6/2013
Chapter 9	Lockout/Tagout	7/2012	7/2014
Chapter 10	Hazardous Operations	8/2012	8/2014
Chapter 11	n/a	n/a	n/a
Chapter 12	Aviation Safety	12/2012	12/2014
Chapter 13	Cryogenic Safety (new chapter-under construction)	2012	2014
Chapter 14	Shop Safety	7/2012	7/2014
Chapter 15	Personal Protective Equipment	2/2012	2/2014
Chapter 16	Confined Space Entry	10/2011	10/2013
Chapter 17	Construction Safety and Health	12/2012	12/2014
Chapter 18	Explosives, Propellants, & Pyrotechnics	8/2012	8/2014
Chapter 19	Vehicle & Pedestrian Safety - No Parking Zone Map	12/2011	12/2013
Chapter 20	Lifting Devices and Equipment	7/2012	7/2014
Chapter 21	Mishap and Close Call Reporting, Investigating and Recordkeeping	5/2010	5/2012
Chapter 22	The Glenn Buddy System	6/2012	6/2014
Chapter 23	n/a	n/a	n/a
Chapter 24	Facility Safety & Health Inspection	10/2012	10/2014
Chapter 25	Combustible-Gas, Toxic-Gas, and Low-Oxygen Detection Systems	6/2012	6/2014
Chapter 26	n/a	n/a	n/a
Chapter 27	Building Emergency Evacuation Plan Program	2/2012	2/2014
Chapter 28	Hot Work Authorization	2/2012	2/2014
Chapter 29	Safety Barricades	6/2012	6/2014
Chapter 30	n/a	n/a	n/a
Chapter 31	Fire Protection	5/2012	5/2014
Chapter 32	Office Safety	10/2012	10/2014
Chapter 33	Job Hazard Analysis	6/2012	6/2014
Chapter 34	Fall Protection	12/2012	12/2014
Chapter 35	Digging, Trenching, & Excavating	7/2012	7/2014

Contents

1.0 PURPOSE 2
2.0 APPLICABILITY 2
3.0 BACKGROUND 2
3.1 Hazard Identification and Risk Assessment 2
3.2 Legal and Other Requirements 2
3.3 Objectives 2
3.4 GRC Health and Safety Management Program 2
4.0 POLICY 2
5.0 RESPONSIBILITIES 2
5.1 Center Director 2
5.2 Director, Safety and Mission Assurance Directorate (SMAD) 3
5.3 Safety, Health and Environmental Board (SHEB) 3
5.4 Chief, Safety, Health and Environmental Division 3
5.5 Medical Director, Support Service Contractor 3
5.6 Emergency Preparedness Coordinator 3
5.7 Safety, Health and Environmental Division Team Leads 3
5.7.1 Compliance Team 3
5.7.2 Construction Team 3
5.7.3 Facilities Team 3
5.7.4 Operations Team 3
5.7.5 Plum Brook Team 3
5.8 Safety, Health and Environmental Division Technical Assistant 3
5.9 Glenn Research Center Management 4
5.10 Glenn Research Center Employees 4
5.11 Safety Committees 4
6.0 REQUIREMENTS 5
6.1 Health and Safety Functional Support Programs 5
6.2 Health and Safety Hazard Prevention Functions 5
6.3 Training—Awareness—Competence 5
6.3.1 Training 5
6.3.2 Awareness 5
6.3.3 Competence 5
6.3.4 Consultation and Communication 6
6.3.5 Documentation 6
6.3.6 Document and Data Control 6
6.3.7 Operational Control 6
6.3.8 Emergency Preparedness and Response 6
6.4 Checking and Corrective Action 6
6.4.1 Performance Measurement and Monitoring 6
6.4.2 Accidents, Incidents, Nonconformances, and Corrective and Preventative Actions 6
7.0 RECORDS 7
7.1 Audit 7
7.2 Management Review 7
8.0 REFERENCES 7
APPENDIX A.—DEFINITIONS AND ACRONYMS 8

Chapter 1—Glenn Safety and Health Management System

NOTE*: *The current version of this chapter is maintained and approved by the Safety, Health and Environmental Division (SHED). The last revision date of this chapter was June 2010. The current version is located at http://smad-ext.grc.nasa.gov/shed/pub/gsm/gsm-manual.pdf. Approved by Chief of Safety, Health and Environmental Division.

1.0 PURPOSE

This chapter describes this system and the processes, programs, and resources used to ensure that Glenn Research Center (GRC) and the workforce are free from recognized hazards that have the potential to cause death or serious injury. The effectiveness of the Glenn Safety and Health Management System depends on supervisors knowing and complying with the requirements that are specific to the activities and facilities within their organizations.

2.0 APPLICABILITY

This chapter applies to all organizations and supervisors at NASA GRC at Lewis Field and Plum Brook Station (PBS).

3.0 BACKGROUND

3.1 Hazard Identification and Risk Assessment

The GRC directorates shall develop safety and health management plans, which define the organization's mission, goals, objectives, metrics, and resources for the Glenn Safety and Health Management System. This requires reviewing work proposals and properly identifying and evaluating potential safety and health hazards.

3.2 Legal and Other Requirements

The Safety, Health and Environmental Division (SHED) maintains manuals that include all SHED program and functions. Each program lists the laws, regulations, standards, and all other relevant requirements for the Glenn Safety and Health Management System.

3.3 Objectives

Ensure the effectiveness of the Glenn Safety and Health Management System by providing safety awareness for supervisors so they know and understand their roles and responsibilities for health and safety requirements and how those requirements are applied to specific activities within their organizations. Compliance is mandated and SHED monitors the effectiveness of the requirements through inspections, audits, and Center management boards and committees.

3.4 GRC Health and Safety Management Program

Each GRC directorate develops an annual safety and health management plan, which defines the organization's mission, goals, objective, metrics, and resources for the Glenn Safety and Health Management System. Special activities and processes are included. These organizational plans shall be continually improved to reduce risk; ensure employee participation; conform to organizational requirements; and comply with applicable laws and regulations. Copies of these plans shall be submitted to SHED for review.

4.0 POLICY

It is GRC's policy to ensure that its operations and activities satisfy occupational health and safety requirements that comply with applicable government regulations, Agency policies, and adopted guidelines and industry standards. GRC management shall provide a means of integrating all required safety and health protection to employees in their organizations.

5.0 RESPONSIBILITIES

5.1 Center Director

Responsible for establishing a Glenn Safety and Health Management System and assigns responsibility and authority to implement, improve, and maintain this system.

5.2 Director, Safety and Mission Assurance Directorate (SMAD)

Assigns responsibility and authority within the SHED and Center organizations for implementing, improving, and maintaining safety and mission assurance for GRC as described in the Annual Operating Agreement (AOA) for GRC.

5.3 Safety, Health and Environmental Board (SHEB)

Responsible for Center-level policies and decisions for safety, health, and environmental programs and functions. The board reports to the Center Director and provides senior-level leadership and oversight to the Glenn Safety and Health Management System.

5.4 Chief, Safety, Health and Environmental Division

Implements the requirements established by the Director of SMAD and supports the Center organizational supervisors for compliance under the Health and Safety Management System.

5.5 Medical Director, Support Service Contractor

Responsible for medical reviews of GRC programs and services that promote the health and wellness of Center employees.

5.6 Emergency Preparedness Coordinator

Responsible for emergency preparedness planning and emergency response activities.

5.7 Safety, Health and Environmental Division Team Leads

SHED includes five teams that are responsible for programs and functions that support and maintain safety and mission assurance for the Center. Each team has a lead who is responsible for the day-to-day technical oversight of the applicable health and safety programs.

5.7.1 Compliance Team

Responsible for environmental management and ensures compliance with the regulatory requirements, all environmental, health, and safety training for GRC, internal audits to validate Center compliance, and the SHED manual review process.

5.7.2 Construction Team

Responsible for environmental, health, and safety technical support for GRC construction activities, which includes conducting construction site audits and assisting with specification development for construction safety.

5.7.3 Facilities Team

Responsible for programs that are applicable to GRC infrastructure systems and providing facilities and systems services and assistance that complies with Center and Agency policies and requirements.

5.7.4 Operations Team

Responsible for occupational health requirements, providing services to the safety permit process and facility operations staff and users.

5.7.5 Plum Brook Team

Responsible for all environmental, health, and safety support for PBS operations and ensuring that all GRC services, policies, and program requirements are applied to PBS activities.

5.8 Safety, Health and Environmental Division Technical Assistant

Responsible for scheduling quarterly meetings with Center organizations to ensure that supervisors are aware of their roles and responsibilities under the requirements of the Glenn Safety and Health Management System. Shall maintain regular collaborative communications with safety points-of-contact, established by the organizations.

5.9 Glenn Research Center Management

The GRC Director is responsible for establishing a Safety and Health Management System in accordance with Federal regulations, NPR **8715.3**, NASA Safety Manual, NPR **8715.1**, NASA Safety and Health Handbook—Occupational Safety and Health Programs, NPR **8715.2**, NASA Emergency Preparedness Plan Procedural Requirements, and other related requirements established by NASA Headquarters.

All organization supervisors have the prime responsibility for compliance with pertinent safety requirements (including those related to housekeeping and shop safety) and for ensuring the effectiveness of the Glenn Safety and Health Management System as it affects the specific activities of their organization. This responsibility includes, but is not limited to, the following:

- Knowing GRC safety and health requirements and communicating these requirements to subordinate personnel.
- Mandating compliance with safety and health requirements and monitoring this compliance.
- Reviewing the work proposals of subordinates and contractors to ensure that all potential safety and health hazards are properly identified and evaluated, that procedures for safe operation and effective emergency rescue have been developed, and that the cognizant Area Safety Committee evaluation is obtained, where appropriate.
- Personally surveying their workareas and recognizing potential hazards therein; analyzing statistics on accidents and near accidents in these areas; and initiating or recommending corrective action where required.
- Notifying SHED whenever there is a change in the potential exposure of any of their employees to hazardous substances or conditions.
- Soliciting technical input from SHED for the development of safe operating procedures, emergency rescue procedures, or any other safety and health documentation.
- Providing direction for continuing safety and health education and training for subordinate personnel in accordance with the standards and criteria established by SHED.
- Reporting all mishaps and close calls within 24 hours of occurrence per Glenn Safety Manual, Chapter **21**.

5.10 Glenn Research Center Employees

Each civil servant employee or support service contract employee is responsible for

- Exercising reasonable care and caution in the safe performance of his or her work assignments and in the conduct of any activity at the Center.
- Possessing knowledge of GRC safety and health regulations, safe operating procedures, and emergency rescue procedures affecting his or her individual workarea and work assignments and complying therewith.
- Reporting the development or appearance of any potentially hazardous condition to his or her supervisor or to SHED.
- Attending and participating in training as required.

No employee will be subject to restraint, interference, coercion, discrimination, or reprisal for filing a report of an unsafe or unhealthful working condition. No employee will be prevented from participating in Center occupational safety and health program activities.

5.11 Safety Committees

The safety committees conduct independent reviews of all proposed installations and operations in their assigned areas to ensure that the proposed design and/or operation is consistent with the dictates of sound engineering judgment and acceptable health and safety standards. Committee membership includes individuals with engineering and operational expertise, as appropriate for that area's activities, and representatives from SHED.

6.0 REQUIREMENTS

6.1 Health and Safety Functional Support Programs

The following functional programs are related to occupational health and safety and provide support to GRC supervisors and management leadership roles and responsibilities for implementation, operations, corrective action, reviews, and resources within the Glenn Safety and Health Management System. These functions are provided under the Medical Services contract.

- Employee Assistance Program
- Fitness Center
- Medical Services
- Nutrition/Dietician

6.2 Health and Safety Hazard Prevention Functions

The following functions have guidelines and procedures to control hazards at GRC

- Facility safety inspections
- Health and Safety Plans (HASPs)
- Mishap and incident reporting and investigation
- Personal protective equipment (PPE)
- Confined space entry
- Cranes and lifting devices
- Fall protection
- Hot work
- Electrical safety
- Emergency response

6.3 Training—Awareness—Competence

The SHED teams shall provide technical guidance to Center organizations for all safety, health, and environmental requirements.

6.3.1 Training

Supervisors shall assess the training needs of their employees and complete an annual training needs assessment for safety, health, and environmental compliance. SHED has developed training modules for supervisor and employee awareness that are implemented through the System for Administration, Training, and Educational Resources for NASA (SATERN).

6.3.2 Awareness

SHED shall host at least four safety and health awareness events each year, through safety and health fairs and other internal safety and health awareness activities. GRC distributes a Center Safety Bulletin each week, which addresses specific safety and health topics.

6.3.3 Competence

Employee competence is a set of skills; education, training, and experience, defined by SHED as the requirements needed to perform health and safety job duties within the organization, and jobs requiring specific knowledge of applied health and safety protective measures. Competence shall be assessed during performance evaluations. Additional training needs shall be identified, at that time, in a written Individual Development Plan. Safety and health training is available through SATERN and course completion status of employees is tracked through SATERN.

6.3.4 Consultation and Communication

Requirements for the Glenn Safety and Health Management System are communicated to both civil servants and contractor personnel through their organizational line management. The Contractor Safety Committee is chaired by the Director, SMAD, and is the primary means to communicate health and safety requirements to all contractors who have personnel located onsite at GRC.

6.3.5 Documentation

The SHED manuals are the primary documentation for programs that are applicable to the Glenn Safety and Health Management System requirements. The SHED program leads shall be responsible for reviewing the manuals annually to maintain current information. The AOA contains the SHED Team metric tasks that have been identified according to SMAD support to Agency, Center, and NASA programs, operations, and activities. SHED also maintains documentation that verifies and validates compliance with all authorities for this chapter.

6.3.6 Document and Data Control

The Business Management System (BMS) and SHED manuals constitute the GRC procedures for documentation and data control. For reviews and revisions, GRC follows the BMS document control policy and procedure, GLPD 1410.2, GLPR 1410.1, and GLPR 1410.3. More frequent reviews and/or revisions may be undertaken if the need is identified based on changing circumstances or changes in regulations. Controlled copies of the documents are in electronic form. These documents are made available to employees and others who may need them to carry out their duties. Obsolete controlled documents are removed from circulation immediately.

6.3.7 Operational Control

Operational controls are specific to the safety and health services being provided and are addressed in the Glenn Safety Manual and the Occupational Health Manual. External regulatory requirements shall be listed in the chapters of each SHED manual.

6.3.8 Emergency Preparedness and Response

SHED uses the Emergency Preparedness Plan (EPP) to determine the appropriate safety, health, and environmental response to implement during emergencies.

6.4 Checking and Corrective Action

6.4.1 Performance Measurement and Monitoring

Operational control procedures shall be verified by the SHED program leads. Measurement and monitoring requirements shall be defined in the SHED manual chapters. The methods shall be designed for the specific program requirements, with a process that produces reliable validation and verification data. The process shall be scheduled at regular, appropriate intervals, annually.

The Internal Compliance Evaluation (ICE) process will be conducted in order to periodically evaluate compliance with relevant safety, health, and environmental regulatory requirements and NASA policy. The annual internal compliance evaluation schedules will be prepared in order to accomplish the self evaluation requirements of various NASA Headquarters offices. The ICE shall be conducted and documented according to GLW1–QS–8550, the GRC SHED Internal Compliance Evaluations Work Instruction.

6.4.2 Accidents, Incidents, Nonconformances, and Corrective and Preventative Actions

When an incident occurs, employees are responsible for reporting mishaps and close calls in the Incident Reporting Information System (IRIS). The responsible organization shall track the corrective action performance and completion in IRIS. SHED shall monitor corrective action activities to determine if they were carried out according to the plan and report noncompliance. SHED shall verify all actions are correctly recorded in IRIS.

The Environmental Management System (EMS) representative and the SHED program leads shall track all nonconformances through the Corrective and Preventative Action Reporting System. This process complies with GLPR 1270.1, “Corrective and Preventative Action,” which is the official Center follow-up procedure for nonconformities and corrective actions.

7.0 RECORDS

The EMS representative and SHED program leads shall be responsible for ensuring that the procedures described in NPR 8553.1, Chapter 5, for Record Retention procedures, GLPR 1440.1, Records Management, and GLPD 1420.1, Forms Management, and shall be completed for health and safety requirements, according to the activities, operations, and procedures being documented.

7.1 Audit

The SHED programs are audited by NASA Headquarters, regulatory agencies, and the internal audit process for GRC.

7.2 Management Review

SHEB establishes safety and health policy for the Center; approves guidelines for risk management for all Center operations; and is an appeal and review board for unresolved safety and health issues.

8.0 REFERENCES

NPR 8715.3	NASA General Safety Program Requirements
NPR 8715.1	NASA Occupational Safety and Health Programs
NPR 8715.2	NASA Emergency Preparedness Procedural Requirements
NPR 8621.1	NASA Procedural Requirements for Mishap Reporting, Investigating and Recordkeeping
Executive Order 12196	Occupational Safety and Health Programs for Federal Employees
Title 29 Code of Federal Regulations (CFR), Part 1960	Basic Program Elements for Federal Employee Occupational Safety and Health Programs and Related Matters
Title 29 CFR Part 1960.9	Establishes the regulatory requirements for Glenn's organizational and supervisory responsibilities for the health and safety of Federal employees
ANSI Z10 Standard	Occupational Health and Safety Management System (OHSMS)
GLPD 1410.2	BMS document control policy and procedure
GLPR 1410.1	BMS document control policy and procedure
GLPR 1410.3	BMS document control policy and procedure
GLW1–QS–8550	GRC SHED Internal Compliance Evaluations Work Instruction
GLPR 1270.1	Corrective and Preventative Action
NPR 8553.1, Chapter 5	Record Retention procedures
GLPR 1440.1	Records Management
GLPD 1420.1	Forms Management

APPENDIX A.—DEFINITIONS AND ACRONYMS

Annual Operating Agreement (AOA)

Business Management System (BMS)

Emergency Preparedness Plan (EPP)

Environmental Management System (EMS)

Glenn Research Center (GRC)

Health and Safety Plan (HASP)

Incident Reporting Information System (IRIS)

Internal Compliance Evaluation (ICE)

Personal protective equipment (PPE)

Plum Brook Station (PBS)

Safety and Mission Assurance Directorate (SMAD)

Safety, Health and Environmental Board (SHEB)

Safety, Health and Environmental Division (SHED)

System for Administration, Training, and Educational Resources for NASA (SATERN)

Contents

1.0 PURPOSE 2
2.0 APPLICABILITY 2
3.0 BACKGROUND 2
4.0 POLICY 2
5.0 RESPONSIBILITIES 2
5.1 Safety Permit Requester 2
5.2 Safety Committee Chair 3
5.3 Safety Committee Members 3
5.4 Safety, Health and Environmental Division (SHED) Team Leaders 3
5.5 Chief, Safety, Health and Environmental Division (SHED) 3
6.0 REQUIREMENTS 3
6.1 Process Summary 3
6.2 Determining the Need for a Safety Permit 4
6.3 Applying for a New Safety Permit, Renewal, or Modification 4
6.4 Safety Permit Review 5
6.5 Issuing the Safety Permit 5
7.0 RECORDS 5
7.1 Safety Chair 5
7.2 Safety, Health and Environmental Division Offices 5
8.0 REFERENCES 5
APPENDIX A .—DEFINITIONS AND ACRONYMS 6
APPENDIX B .—SAFETY PERMIT REQUESTER'S GUIDE 7
B.1 Safety Permit Areas 7
B.2 Preparing the Safety Permit Documentation 7
B.3 Submitting the Documentation for Review 8
B.4 What Happens When the Safety Permit is Approved? 9
B.5 What Happens After the Safety Permit is Approved? 9
B.6 How Long is My Safety Permit Good? 9
B.7 How Do I Renew (or Modify) a Safety Permit? 9
B.8 What Should I Do With the Safety Permit When the Activity is Completed? 9
B.9 Hazard Analysis: What Type of Hazards Analysis Form is Required? 10

List of Tables

TABLE B.1—HAZARD CATEGORIES 10
TABLE B.2—PROBABILITY LEVELS 11
TABLE B.3—RISK ASSESSMENT CODE (RAC) MATRIX 11

Chapter 1A—Safety Permit Process

NOTE: *The current version of this chapter is maintained and approved by the Safety, Health and Environmental Division (SHED). The last revision date of this chapter was May 2010. The current version is located on the Glenn Research Center (GRC) intranet at http://smad-ext.grc.nasa.gov/shed/pub/gsm/gsm-manual.pdf Approved by Chief of Safety, Health and Environmental Division.*

1.0 PURPOSE

The purpose of the safety permit system is to avoid undue risks, injury to personnel, damage to property, or disruption of operations by

- Assuring that a systematic approach is used to identify and control potential hazards
- Obtaining an independent, thorough, and timely safety review of all technical designs, tests, and operations
- Permitting the operation of facilities, systems/subsystems, and experiments within safe constraints
- Controlling changes to permitted facilities system/subsystems, and experiments to ensure continued safe operations
- Instilling safety awareness in all employees and ensuring that facility/test personnel have received the necessary training to safely and properly operate test facilities and research rigs

2.0 APPLICABILITY

The safety permit system applies to research areas and institutional systems across the Glenn Research Center (GRC) and Plum Brook Station (PBS) and to research or test equipment designed and fabricated at GRC that would also be tested offsite.

3.0 BACKGROUND

The requirements of this chapter were derived from NASA Procedural Requirement (NPR) 8715.3—NASA General Safety Program Requirements, NASA Safety Standard (NSS) 8719.7—Facility System Safety Standard, and the GRC Safety, Health and Environmental Division (SHED) Manual, Chapter 1—Safety and Health Management System.

4.0 POLICY

Research areas requiring safety permits shall be determined by the area safety committee chair, laser safety committee chair, or biological safety committee chair and will include laboratories, test sites, test cells, and research operations with potential hazards to personnel or facilities. Institutional systems requiring safety permits shall be determined by the process systems safety committee (PSSC) chair or the electrical applications safety committee (EASC) chair.

Permitted research areas and institutional systems shall have an active safety permit for operation. Active safety permits shall be posted at or near the research areas or systems. Expired safety permits shall be removed by the permit requester or safety chair.

The safety permit requester shall submit a safety permit request to SHED for each proposed GRC test operation, institutional system, and/or modifications to permitted areas and systems, each as determined by the appropriate safety committee chair.

5.0 RESPONSIBILITIES

5.1 Safety Permit Requester

It is the responsibility of the safety permit requester and the supervisor who are assigned to a system, experiment, or facilities operation to ensure that the design and operation of research equipment are safe. All systems should be designed to fulfill fail-safe requirements and to avoid any unsafe condition to any interfacing system. The safety permit requester is also responsible for periodically reviewing the status of the permits and ensuring that expired

safety permits are not posted in the areas of responsibility. In addition, requesters must ensure that equipment is not operated until an approved safety permit is obtained from the safety chair.

5.2 Safety Committee Chair

It is the responsibility of the safety committee chair, using the guidelines in this chapter, to evaluate and determine when a safety permit is required. The safety chair may enlist the assistance of a safety, health, or environmental division representative or any other members of the safety committee to determine the need for a safety permit. The safety chair has the authority to authorize operations under the specific operating conditions noted on the safety permit, provide temporary extensions out of operational necessity, or suspend the safety permit based on unauthorized activity or violation of any NASA headquarters safety and health standard or SHED manual requirement. The chair may also waive the requirement for a safety permit if the work can be covered by laboratory standard practices and there are no significant hazards to personnel or facilities.

5.3 Safety Committee Members

It is the responsibility of the area safety committee members, through an onsite visit, to review safety permit documentation for facility and test operations and insure that all identified hazards are documented and adequately controlled in accordance with NASA policies and requirements. In addition, the committee will recommend specific conditions of operation designed to minimize risk to personnel, equipment, or facilities.

5.4 Safety, Health and Environmental Division (SHED) Team Leaders

It is the responsibility of the team leaders of SHED, operations, compliance, PBS, and facility teams to provide safety, health, and environmental support to the safety committees by reviewing safety permit documentation, serving as a resource for interpreting Occupational Safety and Health Administration (OSHA) and Environmental Protection Agency (EPA) regulations, and ensuring that permitted operations comply with NASA Safety and Health Standards, National Consensus Standards, and the GRC Safety, Health and Environmental Division Manuals.

5.5 Chief, Safety, Health and Environmental Division (SHED)

It is the responsibility of the chief of SHED to maintain the division safety permit files, represent the safety committees on the Safety, Health and Environmental Board (SHEB), seek qualified individuals to serve as safety chairs and recommend their appointment to the Center director.

6.0 REQUIREMENTS

6.1 Process Summary

The safety permit process can be divided into eight distinct steps:

1. **Determination**.—Requester determines if a proposed activity will require a safety permit.
2. **Application**.—Requester prepares Safety Permit Request (NASA **C–923**), Safety Permit Hazard Analysis worksheet (NASA **C–923a**), Facility Hazard Analysis (FHA per NASA–STD–8719.7), and Qualified Operators List (NASA **C–580**) forms with all supporting documentation. Requester obtains supervisor approval and mails the original documentation plus four copies to “SHED” at mail stop 6–4.
3. **Review**.—Safety committee reviews safety permit request forms, and safety chair requests onsite visit to activity location. Safety committee reviews suitability of location, adequacy of controls, and recommends conditions of operation to safety committee chair.
4. **Issuance**.— Safety committee chair issues Safety Permit (NASA **C–919**) and NASA **C–580** (as a minimum) and files copies with both the safety chair and the SHED offices. Requester posts the signed original at the activity location.
5. **Maintenance**.—Activity is performed until permit expires or modifications are made.
6. **Modification/renewal**.—Any major changes or modifications to the design, operating conditions, or procedures and/or any changes to the facility hazard assessment are documented on the Safety Permit Renewal /Change Request (NASA **C–590**), NASA **C–580**, and associated hazard analysis forms.
7. **Termination/phase down**.—Activity is completed. Safety permit is removed, and requester or NASA technical supervisor signs off at the lower right-hand side and mails it to “SHED” at mail stop 6–4.

Cleanup and removal of chemicals are performed. Requester contacts the safety representative to the committee to verify that facility is left in a safe condition. Safety permit is closed out and archived in SHED files.

8. **Appeal**.—If a permit is denied or a stop-work order is issued, the requester can appeal to SHEB. This step is reserved for situations where a risk management decision must be made and the decision goes beyond the authority of the safety committee (e.g., final risk assessment code of 3 or less).

Any safety permit hazard category with a final risk code of 1 or 2 shall not be permitted. See risk assessment code (RAC) matrix in Appendix B.

6.2 Determining the Need for a Safety Permit

The safety committee chair or designated safety committee members can perform a preliminary review of the hazards associated with the proposed activity and provide guidance on whether a safety permit is required. As a general rule of thumb, any operation or activity that has equipment that contains hazardous chemicals (not simply laboratory chemical handling), pressurized vessels or components, sources of ionizing or non-ionizing radiation, operates at high or low temperatures, has electrical or mechanical energy sources, or has fire or life safety hazards will need a safety permit. The chair and committee members are supported by SHED safety and occupational health personnel in making this determination. General hazard categories shown on the NASA **C–923a** are as follows:

- CHEMICALS (beyond laboratory scale handling)
- COLLISION (rotating or moving equipment)
- ELECTRICAL SHOCK (>50 volts)
- TEMPERATURE EXTREMES (materials or processes that are high, >120 °F or low, <32 °F)
- FIRE (capable of producing sufficient heat to produce combustion)
- EXPLOSION/IMPLOSION (vacuum or pressurized vessels or piping)
- HIGH NOISE (equipment that generates noise levels of 80 decibels or higher)
- RADIATION (lasers, radioisotopes, radiofrequency radiation, or induced electromagnetic force)
- LOSS OF HABITABLE ATMOSPHERE (presence of materials that could reduce breathable oxygen concentration to less than 19.5 percent)
- CORROSION (subject to corrosion from environmental factors)
- BIOLOGICAL (research involving pathogens, bacteria, viruses, plants, embryonic cells, animals, or humans subjects)
- OTHER (hazards not covered by any other category)

6.3 Applying for a New Safety Permit, Renewal, or Modification

When applying for a safety permit, the requester must determine which safety committee at GRC has jurisdiction and which safety chairman should be contacted prior to submitting the safety permit documentation. Below are links of interest:

- Safety committee area map for GRC
- Safety committees that have activity, rather than area, jurisdiction: laser safety, biological safety, process safety, and electrical applications safety
- Area Safety Committee List for GRC and PBS

When the design is complete in a timely fashion (typically 30 to 60 days prior to the planned initiation of operations, depending on the scope and complexity of the planned activity), the requester prepares and submits these forms to the requester's branch chief for review and signature: NASA **C–923**, NASA **C–590**, NASA **C–923a**, and NASA **C–580**; Plum Brook Hazard Analysis or a Facility Hazards Analysis, FHA per NASA–STD–8719.7; Plum Brook Station Hazard Analysis format or contractor equivalent form; and any required supporting documentation. All safety permit forms are located at the GRC electronic forms Web site.

When the requester is a NASA support service contractor (SSC), the branch chief of his or her NASA organization acts as the NASA technical supervisor on the forms. After the request has been approved by the NASA technical supervisor, a copy is submitted to SHED at mail stop 6–4. SHED administrative staff will then assign a permit number to the safety permit and distribute it for review to the safety chair and SHED personnel. The safety chair distributes review copies for safety committee members who are not part of SHED.

6.4 Safety Permit Review

After submittal of the request, the safety committee chair or assigned technical lead schedules a review of the proposed operation. For most reviews, the chair should involve a minimum of three committee members, two of whom preferably come from safety and health disciplines. As needed, the safety committee may also call on advisory personnel to assist it. SHED conducts a review to ensure compliance with OSHA or EPA regulations, NASA safety standards or national consensus standards, industrial hygiene, hazardous chemical, or health physics requirements. After the safety committee has reviewed the submittal, an onsite meeting and walk-through of the facility is normally held. Opinions, concurrences, or clarifications are to be documented, forwarded to the permit requester for a response, and filed by the safety committee chair as part of the review documentation. The SHED representatives must provide their input at this time to the safety committee chair. If action items are assigned to the requester, another meeting may be required to complete the review. The safety committee representatives from SHED also verify closure of open safety issues and/or concur on acceptable risk codes for all hazards identified in the hazard analysis form. If open safety issues cannot be resolved through the safety chair or if the final risk assessment code is 3 or less for any hazard, as shown in the risk matrix in Appendix **B**, the chief of SHED may choose to escalate the review of the permit to SHEB or to the director of code Q, Safety and Mission Assurance Directorate (SMAD) for ultimate disposition.

6.5 Issuing the Safety Permit

After the safety committee reviews a safety permit, the safety chair or designee prepares the NASA **C–919** with appropriate operating conditions and attaches the NASA **C–580**. The chair signs the original safety permit and adds the permit number provided by the SHED administrative staff. The SHED safety representative provides the appropriate National Fire Protection Association (NFPA) hazard ratings to the safety chair for hazardous chemicals associated with the process so that helpful information can be provided to emergency response personnel. The chair retains a copy of the documentation for his/her files before sending the original to SHED.

The SHED administrative staff will log the approved permit into the SAFEPERM database and send the original NASA **C–919** safety permit (with the colored NFPA hazard identification sticker attached) along with the qualified operator list (QOL) to the requester for posting at the worksite. A copy of the approved permit, permit renewal/change request, hazard analysis, and QOL are kept in the SHED files.

7.0 RECORDS

7.1 Safety Chair

The safety chair maintains copies of approved Safety Permit forms (NASA **C–919**), new Safety Permit Requests (NASA **C–923**), safety permit Renewal/Change Requests (NASA **C–590**), Qualified Operators Lists (NASA **C–580**), Hazard Analysis (NASA **C–923a**) or Facility Hazards Analysis (FHA), and all related drawings, specification, procedures, and checklists, including written correspondence with the permit requester.

7.2 Safety, Health and Environmental Division Offices

Maintains copies of all approved or active Safety Permits (**C–919**), new Safety Permit Requests (NASA **C–923**), safety permit Renewal/Change Requests (NASA **C–590**), Qualified Operators Lists (NASA **C–580**) and all cancelled or archived safety permits for the period specified on the documentation retention record NASA **C–278**.

8.0 REFERENCES

Document number	Document name
NPR 8715.3	NASA Safety Program Requirements
NASA–STD–8719.7	Facility System Safety Standard

APPENDIX A.—DEFINITIONS AND ACRONYMS

Electrical application safety committee (EASC)

Environmental Protection Agency (EPA)

Facility Hazard Analysis (FHA)

Glenn Research Center (GRC)

Material safety data sheet (MSDS)

National Aeronautics and Space Administration (NASA)

National Fire Protection Association (NFPA)

NASA Procedural Requirement (NPR)

Nuclear Regulatory Commission (NRC)

NASA Safety Standard (NSS)

Occupational Safety and Health Administration (OSHA)

Plum Brook Station (PBS)

Pressure Systems Office (PSO)

Process and instrumentation diagram (P&ID)

Process system safety committee (PSSC)

Qualified operator's List (QOL)

Risk assessment code (RAC)

Support service contractor (SCC)

Safety, Health and Environmental Board (SHEB)

Safety, Health and Environmental Division (SHED)

Safety and Mission Assurance Directorate (SMAD)

APPENDIX B.—SAFETY PERMIT REQUESTER'S GUIDE

B.1 Safety Permit Areas

1. There are 13 safety committees at GRC.
2. After checking the listing below to see in which safety area your activity is occurring, contact the safety committee chair for that area at the conceptual stages of design or as early as possible. The chair will determine if a safety permit is required and will discuss the requirement for any necessary supporting documentation, as well as the safety committee review process. Buildings located in various safety areas are shown below:
   - Aviation safety committee: buildings 4 and 101 flight operations only
   - Area 2 safety committee: buildings 5, 23, 37, and 38
   - Area 3 safety committee: buildings 14, 21, and 50
   - Area 4 safety committee: buildings 39, 53, 54, 55, 56, 63, 85, 102, 110, 124, 125, 145, and 150
   - Area 5 safety committee: buildings 35, 51, 109, 100, 100 Annex, 127, 135, 147, 401, 401, and 403
   - Area 6 safety committee: buildings 24, 34, 49, 105, 106, 127, and 140
   - Area 7 safety committee: buildings 16, 301, 302, 309, 332, 333, 334, and 336
   - Area 8 safety committee: buildings 6, 7, 11, 45, and 77
   - Area 9 safety committee: all Plum Brook Station buildings
   - Biological safety committee: all research associated with pathogens, bacteria, viruses, plants, embryonic cells, animals, or testing with human subjects
   - Electrical applications safety committee (EASC): all electrical substations, variable-frequency drives and high-voltage systems (with source voltages of 601 volts or greater)
   - Process system safety committee (PSSC): all central process systems, including cooling tower water, combustion air, natural gas heating systems, steam boilers, centralized refrigeration systems, shop air, wind tunnel natural gas heaters and desiccant air dryers, underground fuel storage, central air equipment, stationary compressed gas and cryogenic fluid storage tanks and distribution systems
   - Laser safety committee: all laser use.

B.2 Preparing the Safety Permit Documentation

Obtain and complete a NASA **C–923** or NASA **C–590**, and the associated NASA **C–923a** or FHA and NASA **C–580**. Also include any support documentation, such as pressure system certification, exemption or approved safety deviation or waiver, process and instrumentation diagrams (P&IDs), schematics, graphical representations, operational and emergency procedures, checklists, barricading plans, list of alarms and shutdowns. Include copies of any material safety data sheets (MSDSs) for any hazardous chemicals. Copies of these forms are provided online at the GRC electronic forms Web site

2. Perform an internal review of the safety permit documentation with your immediate supervisor to ensure accuracy and completeness. Use the guidance below to check completeness of the documentation for the NASA **C–923**:
   - Permit title, number, location, and duration of activity
   - Safety committee number or name, requester's name, organization, and work phone number
   - Test description
   - Technical description of the test rig, systems, equipment (including design approach), compliance with applicable codes, supporting calculations, test or inspection data, and parts lists or descriptions

- Frequency of operations
- Pressure system certification waiver or exemption.

  (Note: A Pressure Systems Office (PSO) risk assessment is required for permits where equipment has any of the following characteristics: compressible fluids, relief devices, pressure or vacuum vessels, fuel tanks, and pressurized gas distribution systems. GRC pressure system certification requirements are located at the Facilities Division Web site).
- Ionizing or non-ionizing radiation hazards require a separate safety permit issued by the GRC radiation/laser safety officer.

  (Note: For activities involving ionizing radiation sources, Glenn's Nuclear Regulatory Commission (NRC) license may need to be modified. This takes at least 60 days, so it is crucial that the safety permit process be initiated as early as possible so that this time element can be built into the permit processing schedule).

Use the guidance below to check completeness of the documentation for the NASA **C–923a**, the Plum Brook Station hazard analysis, or the FHA. (Note: For guidance on which hazard analysis form to use, refer to section **B.9** or contact the safety representative assigned to your safety committee):

- For complex systems or facilities, consider identifying all hazards at system, subsystem, or component level by assessing failure modes and effects using the FHA.
- For simple systems or laboratory rigs, consider identifying hazards by type: collision, chemical, explosion or implosion, electrical, temperature extremes, fire, high noise, ionizing or non- ionizing radiation, loss of habitable atmosphere, biological or other hazards.

Use the guidance below to check completeness of the documentation for the NASA **C–580**:

- Permit title, number, and location
- Experience, knowledge, skills, certification, or training required to perform the activity.
- On-The-Job Training (NASA **C–40**) shall be attached to the QOL if new operator qualification is based on working with a present qualified operator using specific written procedures or when classroom or online training is considered insufficient.
- A copy of certification required for the activity, such as explosive or propellant handler, radiation worker, or laser operator training record, crane or tow motor operator, high-pressure-trailer operator, high-voltage-system field operator, or other hazardous operation certification.

Use the guidance below to check completeness of the documentation for the NASA **C–590**:

- Permit title, number, and duration of activity
- Safety committee number or name, requester’s name and work phone number
- Technical description of changes (or no changes for simple renewals) to processes, equipment, qualified operators, or emergency contacts; identification of any new equipment and related documentation

3. Request that the NASA technical supervisor sign the NASA **C–923**, NASA **C–590**, and NASA **C–580**. It is also necessary to have the NASA **C–580** signed by the actual supervisor(s) of the qualified operator(s).

B.3 Submitting the Documentation for Review

1. Submit the original plus four copies of the package to SHED at mail stop 6–4. This will allow tracking of safety permit requests by the SHED administrative staff. SHED will assign a number to the permit documentation and will forward the request to the safety committee chair, if the permit request is properly completed.

If there is no hazard analysis, QOL, or proper signatures, the request will be returned by SHED to the requester for correction immediately.

2. After review of the request for completeness, the request will be forwarded to the safety committee chair. The safety committee chair or designee will then contact the requester to set up a meeting and a safety committee walk-through for the permit activity. (This step does not constitute a full technical review, but can be considered a quality check.) Since obtaining an approved safety permit can at times be a lengthy process, it is recommended that the permit requester submit the required documentation as early as possible.

B.4 What Happens When the Safety Permit is Approved?

After receiving a signed safety permit, the permit requester is responsible for posting the safety permit in a conspicuous place at the location of the activity or preferably in a nonhazardous location accessible by emergency responders. The requester must post the signed NASA **C–919** (pp. 1 and 2 describing test activity and conditions of operation), any signed Certificate of Exclusion NASA–STD 8719.17, NASA Requirements for Ground-Based Pressure Vessels and Pressurized Systems (PV/S) (NASA **C–4029**), and the signed NASA **C–580**. No other safety-permit-related documentation needs to be posted.

B.5 What Happens After the Safety Permit is Approved?

1. Posting of the safety permit allows the requester to begin the permitted operation or experiment. Any desired deviations from the specified conditions or procedures approved by the area safety committee shall be approved by the safety committee chair prior to implementation.

   Failure to comply with the procedures and operating conditions described on the safety permit may result in suspension or termination of the operation by the safety committee chair.

2. SHED safety inspectors, as part of quarterly and annual walk-through inspections, will write violations on expired safety permits that are posted.

B.6 How Long is My Safety Permit Good?

1. New safety permits are typically issued for a 1-year period. There may be permitted activities that the safety committee determines to be relatively benign and unchanging (generally not testing-related activities) for which the committee is willing to issue a multi-2- or 3-year permit. The decision to issue a multiyear permit is at the discretion and control of the safety committee chair.
2. A notification of expiration will be sent to the last permit requester of record by SHED 60-days prior to expiration. If the responsible permit requester changes before the permit expires, it is the original requester‘s responsibility to notify SHED using the NASA **C–590**.

B.7 How Do I Renew (or Modify) a Safety Permit?

For renewals/modifications or changes, the procedure is as follows. A notification of expiration will be sent for renewals to the last requester by SHED 60 days prior to expiration. For all submittals, ensure that all documentation that was submitted with the original NASA **C–923** is accurate and up to date. Review the NASA **C–580** and ensure that it is also up to date. Ensure that all test procedures are up to date and that limit switches, warning lights, emergency stops, and other safety features are still functional. Complete a NASA **C–590**, NASA **C–923a** or FHA, updated NASA **C–580**, and obtain the requester’s NASA technical supervisor's signature of approval. Send all forms to SHED at mail stop 6–4 at least 30 days before expiration.

B.8 What Should I Do With the Safety Permit When the Activity is Completed?

1. The activity area must be returned to a safe condition. Properly dispose of all hazardous materials used for the activity and clean up the facility for future use. Contact GRC Waste Management for assistance with chemical disposal.
2. Take down the posted NASA **C–919** safety permit, sign and date it in the lower right-hand corner, and send it to SHED at mail stop 6–4. Then contact the SHED safety representative assigned to the area to perform a final inspection.

B.9 Hazard Analysis: What Type of Hazards Analysis Form is Required?

A hazards analysis is used to identify the hazards associated with a task, system, facility, or operation; to assess the risk associated with the hazards; and to implement control measures that will reduce that risk to an acceptable level. Three types of hazard analysis support the safety permit process at GRC: Hazard Analysis Worksheet (NASA **C–923a**), Facility Hazard Analysis (FHA), and aircraft hazard analysis. Plum Brook Station performs a hazard analysis in accordance with GRC BMS document GLP–H–8715.1, which is entitled "Hazards Analysis Development."

1. The NASA **C–923a** is used for activities
   a. That involve chemicals with a NFPA rating of 1 to 3 (health, flammability, or reactivity) which are handled in a single cylinder or drum
   b. Where there is substantial (>2 years) experience at GRC in similar or identical activities
   c. Where the potential damage from hazards inherent to the activity is less than $250,000
   d. When the cognizant area safety committee has approved its use
2. The FHA is used for activities
   a. That involve chemicals with a NFPA rating of 4 (health, flammability, or reactivity) or special NFPA designations (e.g., OXY)
   b. That involve chemicals with a NFPA Rating of 1 to 3 (health, flammability, or reactivity) which are handled in nonstandard containers (i.e., anything larger than standard cylinders or 55-gallon drums)
   c. Where there is no substantial (<2 years) experience at GRC in similar or identical activities
   d. Where the potential damage from hazards inherent to the activity is greater than or equal to $250,000
   e. Where nonrelated activities in surrounding rooms, buildings, cells, and so forth can be adversely affected by the activity seeking the permit
3. Determining the risk assessment code (RAC) for each hazard on the Hazard Analysis form

   The hazard analysis consists of (1) a list of identified hazard types or a listing of failure modes; (2) an assessment of the risk (severity and probability); and (3) the hazard controls that will ensure the safe operation of the test, facility, or activity. Numerical tabulation of the severity and probability predictions (RAC) is required before and after mitigation techniques are utilized. Current NASA policy requires the use of a 4 × 6 matrix of hazard category versus probability level.

TABLE B.1—HAZARD CATEGORIES

Category	Personal Illness/Injury	Equipment Loss ($K)	Downtime	Data Integrity	Environmental Effect
I Catastrophic	Death	>$1000	>4 months	Data never recoverable or primary program objectives lost	Long-term (>5 years) environmental damage or requiring >$1M to correct and/or in penalties
II Critical	Severe injury or occupational illness	$1000 to $250	4 months to 2 weeks	Repeat test program	Medium-term (1-5 years) environmental damage or requiring $250K-$1M to correct and/or in penalties
III Marginal	Minor injury or occupational illness	$250 to $25	2 weeks to 1 day	Repeat test period	Short-term (<1 year) environmental damage or requiring $25K-$250K to correct and/or in penalties
IV Negligible	No injury or illness	$25 to $1	<1 day	Repeat data point or data requires minor manipulation or computer rerun	Minor environmental damage, readily repaired and/or requiring $1K-$25K to correct and/or in penalties

TABLE B.2—PROBABILITY LEVELS

Level	Descriptive Word	Qualitative Definition	Quantitative Definition
A	Frequent	Likely to occur repeatedly in system/component life cycle	$X > 10^{-1}$
B	Probable	Likely to occur several times in system/component life cycle	$10^{-1} \geq X > 10^{-2}$
C	Occasional	Likely to occur at sometime in system/component life cycle	$10^{-2} \geq X > 10^{-3}$
D	Remote	Not likely to occur in system/component life cycle, but is possible	$10^{-3} \geq X > 10^{-6}$
E	Improbable	So unlikely that it can be assumed occurrence may not be experienced	$10^{-6} \geq X$
F	Impossible	Occurrence is physically impossible	

TABLE B.3—RISK ASSESSMENT CODE (RAC) MATRIX

RAC	A Frequent	B Probable	C Occasional	D Remote	E Improbable
1 Catastrophic	1A	1B	1C	1D	1E
2 Critical	2A	2B	2C	2D	2E
3 Marginal	3A	3B	3C	3D	3E
4 Negligible	4A	4B	4C	4D	4E

The intersection of the Hazard Category and the Hazard Probability produces the RAC. The hazard category, probability of occurrence, and resulting RAC must all be shown on the sheet.

4. Will my Safety Permit be approved?

   The final RAC (after mitigation of each hazard) will determine if the facility, equipment, or experiment will be permitted. Below are the criteria used for determining if the permitted activity is of accessible risk.

   a. RAC = (1) = (1A, 1B, 1C, 2A, 2B, or 3A): Unacceptable Risk; a safety permit cannot be issued without further hazard mitigation.

   b. RAC = (2) = (1D, 2C, 2D, 3B or 3C): Undesirable Risk; the director of Safety and Mission Assurance Directorate must review and approve.

   c. RAC = (3) = (1E, 2E, 3D, 3E, 4A, 4B): Acceptable Risk; this RAC is suitable for area safety committees to review and safety chairs to approve.

   d. RAC = (4) = (4C, 4D or 4E): Acceptable Risk; this RAC is suitable for Area safety committees to review and safety chairs to approve.

Contents

1.0 PURPOSE....2
2.0 APPLICABILITY....2
3.0 BACKGROUND....2
4.0 POLICY....2
5.0 RESPONSIBILITIES....3
5.1 Glenn Research Center Director....3
5.2 Supervisors....3
5.3 Line Managers and Supervisors....3
5.4 Safety and Health Division....4
5.5 Employees....4
5.6 Human Capital Development Division (HCDD)....4
6.0 REQUIREMENTS....5
6.1 Determination of Training Needs....5
6.1.1 Process of Determining Training Needs....5
6.1.2 Safety, Health, and Environmental Training Matrix....5
6.2 Environmental, Occupational Health, and Safety Training....5
6.2.1 Target Groups....5
6.2.2 Target Group Training Needs....5
6.2.3 Training Areas....7
7.0 RECORDS....8
8.0 REFERENCES....8
APPENDIX A....9
APPENDIX B .—DEFINITIONS AND ACRONYMS....9

Chapter 2—Safety, Health and Environmental Training

NOTE: *The current version of this chapter is maintained and approved by the Safety and Health Division (SHeD). The last revision date of this chapter was May 2012. The current version is located on the Glenn Research Center intranet at http://smad-ext.grc.nasa.gov/SHeD/pub/gsm/gsm-manual.pdf. Approved by Chief of Safety and Health Division.*

1.0 PURPOSE

This chapter describes policies and procedures and assigns responsibilities pertaining to environmental, occupational health, and safety (EHS) training for NASA Glenn Research Center (GRC) employees.

NOTE: *This chapter is an overview of GRC's EHS training program. Section **6.2.2** of this document includes a discussion of the training all GRC employees shall complete and an overview of training requirements for certified personnel. For more specific information about required or recommended training for any one particular EHS discipline, please see the Environmental Programs Manual, the Glenn Safety Manual, or the Occupational Health Programs Manual chapter pertaining to that topic. These manuals are maintained by the Safety, Health and Environmental Division.*

2.0 APPLICABILITY

The procedures, responsibilities, and requirements set forth in this chapter apply to GRC civil servant employees, as well as GRC contractors in accordance with the terms of their contracts, and to other Government agency employees who support operations at Lewis Field, Plum Brook Station, and any facility under GRC cognizance.

This chapter *does not apply* to personnel who operate a test rig or any facility requiring a Safety Permit. The certifications of qualified facility operators working in the types of operations that require a safety permit are specified in Chapter **1A** of the Glenn Safety Manual.

This chapter *does not apply* to personnel engaged in operations that already require skill certification by quality assurance organizations, such as soldering, brazing, crimping, and potting or to personnel performing inspections with dye penetrant and magnetic particles, ultrasound, radiography, magnaflux, and comparable operations.

Specific training for certifications is dependent on the task being conducted; all applicable codes, standards, and practices contained within the operation apply.

3.0 BACKGROUND

Employees need not only technical skill to do their jobs properly, they also shall have appropriate training in order to perform their work safely and with methods that are protective of the environment and occupational health.

Indeed, Occupational Safety and Health Administration (OSHA) regulations pertaining to basic program elements for Federal employees (29 Code of Federal Regulation (CFR) 1960) include provisions for safety and health training for supervisors (29 CFR 1960.55) and employees (29 CFR 1960.59) that are pertinent to the work being performed. In addition, training requirements described by Environmental Protection Agency regulations, as well as NASA environmental policies apply to certain personnel at GRC. In light of the many regulations and guidance documents aimed at protecting the safety and health of the work force, as well as the environment, this chapter clarifies the responsibilities and requirements pertaining to EHS training at GRC.

4.0 POLICY

It is GRC policy to ensure that GRC personnel are trained commensurate with the applicable safety, environmental and occupational health requirements that pertain to their jobs. Effective training ensures that the operation methodologies implemented are safe. In addition, it is NASA policy to make all operations as safe as possible through the proactive and effective use of design engineering and/or administrative controls to minimize, if not eliminate, any hazards. A third option, the use of personal protective equipment, is available to control hazards that cannot be totally abated or reduced to acceptable exposure limits.

The authority for the policies and procedures contained in this chapter is derived from the following documents:

- Executive Order 12196, Occupational Safety and Health Programs for Federal Employees

- 29 CFR 1960, Basic Program Elements for Federal Employee Occupational Safety and Health Programs and Related Matters, Subpart H
- NASA Procedural Requirement (NPR) **8715.3C**, NASA General Safety Program Requirements
- NPR **1800.1C**, NASA Occupational Health Program Procedures
- NPR **8621.1B**, NASA Procedural Requirements for Mishap and Close Call Reporting, Investigating, and Recordkeeping
- Glenn Level Policy Directive 8500.1, NASA Glenn Environmental Management System (EMS) Policy
- GRC Procedure GRC–P3.31, Training and Career Development.

  NOTE: *The Human Capital Development Division(HCDD) is currently revising GRC–P3.3.1.*

5.0 RESPONSIBILITIES

5.1 Glenn Research Center Director

According to NPR 8715.3C, paragraph 7.3, NASA center directors shall oversee several aspects of the planning and implementation of their center's safety training program. At GRC, these responsibilities are split between line managers and supervisors (see Section 0), SHED (see Section 5.4), and HCDD (see Section 0).

5.2 Supervisors

5.2.1 In accordance with NPR 8715.3C, NASA supervisors are responsible for the following:

- Formulating and documenting a comprehensive safety training program at their center (Requirement **32147**)
- Developing and maintaining a center safety training plan
- Ensuring that system safety training is available to meet the needs of programmatic activities (Requirement **32116**)

5.3 Line Managers and Supervisors

In general, line managers and supervisors shall be primarily responsible for providing their personnel with a safe working environment, recognizing potential hazards in their areas, and budgeting resources for special training for their employees.

At GRC, in accordance with NPR **8715.3C**, supervisors are responsible for the following:

- Ensuring that all of their personnel engaged in physical work are instructed in accident prevention and are fully informed of the hazards involved (Requirement **32301**)
- Ensuring that training for all of their personnel engaged in electrical work includes first-aid procedures and cardiopulmonary resuscitation (Requirement **32302**)
- Ensuring that all of their personnel at risk of exposure to cryogenic liquids receive training in correct first-aid measures for these liquids
- Ensuring that software safety personnel and project/program lead software safety analysts are trained to NASA Standard (STD) **8719.13**, Software Safety, and NASA STD **8739.8**, Standard for Software Assurance
- Ensuring that operators of motorized equipment have formal initial training, consisting of both classroom and operational testing to ensure operator proficiency, if operating the motorized equipment involves skills beyond those associated with normal, everyday operation of private motor vehicles (Requirement **32271**)
- Ensuring that operators of motorized equipment have periodic refresher training and testing as determined by SHED and/or the employees' supervisors if operating the motor vehicle requires skills beyond those associated with normal, everyday operation of private motor vehicles (Requirement **32272**)

- Identifying and including training for their personnel involved with jobs that are potentially hazardous in addition to the mandatory listing in paragraph 7.4.5 of NPR **8715.3C** (also see Section **6.2.2.6**)

Line managers and supervisors shall be responsible for ensuring that the employees working under them register for pertinent required EHS training. The annual Basic Environmental, Health, and Safety Training (BEHST) provided by HCDD assists employees in determining their training needs; however, supervisors may add or delete training courses from the list generated by this assessment tool on the basis of the knowledge they have of their employees' duties and the conditions of their work environment. Supervisors shall ensure that the EHS training courses needed by civil servant employees are listed in employees' individual development plans and/or performance plans.

5.4 Safety and Health Division

In accordance with NPR **8715.3C**, operations at GRC shall be reviewed annually to ensure that the implemented safety training program is working effectively. As such, SHeD shall have an assessment and oversight role for EHS training efforts at GRC. SHeD shall perform internal compliance evaluations in order to track the effectiveness of EHS programs. Regarding EHS training, this may include, but is not limited to, reviewing training requirements, courses, training records, and other documentation. Any findings noted by SHeD as part of this assessment process shall be tracked until they are considered to be resolved, and actions will be taken in order to prevent recurrences, as necessary.

SHeD shall also work closely with HCDD and will have a role in the continued development of HCDD's BEHST tool (see Section **6.1.1**) as it pertains to EHS training. In addition, SHeD may develop and present EHS training courses and materials, as necessary. Subject matter experts within SHeD are available to provide guidance regarding training requirements and may be able to provide training, for specific EHS topic areas. See SHeD Areas of Responsibility (Who to Call for Help!) for contact information.

In accordance with requirements described in NPR **8621.1B**, Section 1.2.23 (c), SHeD shall ensure that GRC employees are familiar with the roles and responsibilities documented in the Center Mishap Preparedness and Contingency Plan and the NPR. The Mishap and Close Call and Reporting training provided in order to meet this requirement is discussed in Sections **6.2.2.1**, **6.2.2.4**, and **6.2.2.5** of this document.

5.5 Employees

All employees shall be responsible for:

- Conducting their work in compliance with all applicable EHS laws and regulations
- Exercising common sense, reasonable care, and caution regarding the safe performance of their work assignments
- Possessing knowledge of and implementing GRC Environmental, Health, and Safety (EHS) policies
- Completing the annual BEHST provided by HCDD and subsequently applying for any required EHS training courses, when available, or locating and applying for any offsite training courses, once the employee's supervisor has reviewed and approved and/or changed the list of courses needed (see Section **6.1**) (EHS training courses needed by civil servant employees shall be listed in employees' individual development plans.)
- Using the safe emergency response procedures applicable to their individual work areas and work assignments
- Reviewing the building evacuation plan for each building they work in

5.6 Human Capital Development Division (HCDD)

HCDD shall be responsible for coordinating training courses with requestors, including courses from the NASA Safety Training Center. HCDD is responsible for providing the BEHST tool (see Section **6.1.1**) to all GRC employees. When the data gathered by HCDD regarding the needs assessment indicate that a significant number of personnel require training on a given topic, HCDD shall coordinate corresponding training sessions at GRC. HCDD publishes a training calendar on its HCDD website that shows dates of upcoming EHS training.

6.0 REQUIREMENTS

6.1 Determination of Training Needs

6.1.1 Process of Determining Training Needs

Training may be obtained through a variety of sources including onsite and offsite training courses, academic instruction, topic-related conferences, Web-based instruction, and on-the-job training. For assistance with coordinating training courses, contact HCDD. The HCDD website contains schedules and announcements of training courses.

Obtaining the required or desired training depends on several factors including organizational and individual needs, type and complexity of research or equipment operation, availability of courses and instructors, and budget constraints.

The following process shall be followed to determine required training needs:

(1) Employees complete the BEHST provided online in SATERN by HCDD.

(2) The employees' supervisors review the results of the employees' training requirements and add or delete training courses as necessary. The results of these online needs assessments are provided to and interpreted by HCDD.

(3) Employees are responsible for applying for the required course when available or for locating and applying for an offsite training course.

(4) Supervisors are responsible for ensuring that their employees register for required training.

(5) Employees register online for onsite or external training courses in the System for Administrative, Training and Educational Resources for NASA (SATERN).

6.1.2 Safety, Health, Environmental Training Matrix

In addition to the needs assessment, the Safety, Health, and Environmental Training Matrix were developed by SHeD. This matrix lists required and recommended (as per NASA, Federal, State, and/or local rules and regulations) EHS training alphabetically by subject matter.

6.2 Environmental, Occupational Health, and Safety Training

6.2.1 Target Groups

Appropriate instruction and job-related EHS information shall be required for all employees at GRC. Additional training may be required for the following individuals:

- Managers and supervisors
- Collateral duty safety personnel and area safety committee members (see Chapter **1A** of the Glenn Safety Manual)
- Employee representatives

6.2.2 Target Group Training Needs

6.2.2.1 Managers and Supervisors

Basic EHS training shall be provided so that managers and supervisors can identify and report safety hazards in their work areas as well as identify and strive to eliminate employees' unhealthful and unsafe work behaviors. The training will help to develop requisite skills for implementing safety programs within work units, including training and motivating employees toward safe work practices and making them aware of their specific responsibilities in the programs.

Mishap and Close Call Reporting training shall be provided in order to ensure that managers and supervisors are familiar with the roles and responsibilities as documented within the Center Mishap Preparedness and Contingency Plan and NPR **8621.1B**, including the proper reporting procedures in the event of a mishap or close-call event.

Managers and supervisors shall take Basic Safety, Health, & Environmental training and Mishap and Close Call Reporting training as described in this chapter once every 3 years. In addition, managers and supervisors shall complete Hazard Communication General Orientation training at least once so that they are aware of the hazards of the chemicals that they work with or encounter at GRC and the ways to protect themselves from those hazards. Laboratory supervisors shall complete this training every 3 years. These trainings are provided by SHeD (however, those taking the training shall be responsible for signing up for it and completing it when it becomes available.) This training may be in either an instructor-led or a SATERN-based format. In addition, managers and supervisors (along with all GRC employees) shall take SATERN-based EMS (GRC's environmental management program) training on an annual basis.

The process for completing additional EHS training modules required to meet job-specific situations for certain employees is described in Section **6.1.1**.

6.2.2.2 Collateral Duty Safety Personnel and Area Safety Committee Members

Upon appointment to a collateral duty safety position such as a directorate safety point-of-contact or to a safety committee, an employee will be provided with appropriate training commensurate with the scope of the assigned responsibilities. Training shall include NASA procedures for reporting, evaluating, and abating hazards; NASA procedures for reporting and investigating allegations of reprisal; recognition of hazardous conditions and environments; identification and use of occupational safety standards; and other appropriate rules and regulations.

6.2.2.3 Employee Representatives

GRC personnel who are representatives of employee groups, such as collective bargaining units, shall receive training information and materials that enable such groups to ensure safe working conditions and practices in the workplace.

6.2.2.4 Workplace Employees

All GRC employees shall take Safety, Health, & Environmental training and Mishap and Close Call Reporting training once every 3 years. All employees shall complete Hazard Communication General Orientation training at least once, but laboratory workers shall complete this training every 3 years. These trainings are provided by SHED (however, those taking the training shall be responsible for signing up for it and completing it when it becomes available.) This training may be in either an instructor-led or a SATERN-based format. For more information on these training modules, see Section **6.2.2.1**. In addition, all GRC employees shall take SATERN-based EMS training on an annual basis.

The process for completing additional EHS training modules required to meet job-specific situations for certain employees is described in Section **6.1.1**.

6.2.2.5 All New Employees

The following are required courses for all new employees:

- BEHST Hazard Communication General Orientation
- Personal Protective Equipment (as required)
- Environmental Management System (EMS)
- Mishap and Close Call Reporting

6.2.2.5 Verification: Civil Servant employee training records stored within SATERN. – Maintained and tracked by Human Capital Development Division (HCDD).

6.2.2.6 Certified Personnel

Individuals performing certain tasks may require training over and above minimal safety and health awareness. These tasks include, but are not limited to, hearing conservation, respiratory protection, cranes and lifting devices, and material handling equipment. Additional tasks may require specific certification dependent on Federal or State standards. According to NPR **8715.3C**, Chapter 7, Section 7.4.1, personnel who perform or control hazardous

operations or use or transport hazardous material shall be trained and certified with the necessary knowledge, skill, judgment, and physical ability to do the job safely. The following GRC personnel who perform hazardous operations need to have safety certification:

- Air crew members (Federal Aviation Administration licensing may not be sufficient)
- Critical lift crane operators (the "critical" designation is determined from the replacement value, the uniqueness of the material lifted, and the hazards involved)
- Propellant or explosives users
- Propellant or explosives handlers
- Rescue personnel
- Self-contained atmospheric protective ensemble users
- Altitude chamber operators
- Heavy equipment operators (e.g., forklift)
- High-pressure liquid, vapor, or gas system operators (above 150 pounds per square inch gauge, psig)
- Electricians who work with high voltage (above 110 V)
- Confined space monitors
- Hyperbaric chamber operators
- Explosive-actuated tool operators
- Radiation (ionizing and non-ionizing) workers
- Tank farm workers
- Wind tunnel operators (if not covered by a safety permit)
- Welders
- Hazardous material users
- Crane operators (other than critical lift)
- Riggers for hoisting operations

Certification for individuals involved strictly with the handling, transport, or packaging of hazardous materials that will not otherwise disturb the integrity of the basic properly packaged shipping container that holds the hazardous material.

> ***NOTE:*** *As stated in NPR **8715.3C**, Chapter 7, this list is not necessarily all inclusive. See the SHeD Environmental Programs Manual, Glenn Safety Manual, or Occupational Health Programs Manual for training and certification requirements related to specific topic areas.*

6.2.3 Training Areas

The safety and health training programs are structured to ensure, at a minimum, that pertinent information from the following is provided to GRC employees and to others as applicable:

- Essential features of Public Law 91–596, Occupational Safety and Health Act (1970)
- Essential features of Executive Order 12196, Occupational Safety and Health Programs for Federal Employees
- Requirements of 29 CFR 1960.59, Basic Program Elements for Federal Employee Occupational Safety and Health Programs and Related Matters
- NASA's occupational health program procedures (See NPR **1800.1C**)

- NASA's general safety program requirements (see NPR **8715.3C**)
- Individual employee rights and responsibilities regarding safety and health
- Specific job-related safety and health information such as hazards of the job; safe work practices; hazards of the work environment; use and care of personal protective equipment; first aid procedures; and reporting of injuries, illnesses, and hazardous conditions

7.0 RECORDS

- Civil servant employee training records stored within SATERN.—Maintained and tracked by HCDD.

  Even if the training was not web-based, training attendance and any associated test results can be uploaded to SATERN.
- Support service contractor training records.—Maintained and tracked by the applicable contractor organization.

8.0 REFERENCES

Document number	Document name
Executive Order 12196	Occupational Safety and Health Programs for Federal Employees. Feb. 26, 1980.
NPR **8715.3C**	NASA General Safety Program Requirements.
NPR **1800.1C**	NASA Occupational Health Program Procedures
NPR **8621.1B**	NASA Procedural Requirements for Mishap and Close Call Reporting, Investigating, and Recordkeeping
GLPD 8500.1	NASA GRC Environmental Management System Policy
GRC–P3.31	Training and Career Development
Public Law 91–596.84 stat 1589.1970	Occupational Safety and Health Act (OSHA), 1970.
29 CFR 1960	Basic Program Elements for Federal Employee Occupational Safety and Health Programs and Related Matters.
49 CFR 172	Hazardous Materials Table, Special Provisions, Hazardous Materials Communications, Emergency Response Information, and Training Requirements.
49 CFR 171, Section 8	General Information, Regulations, and Definitions. Definitions and Abbreviations (which pertain to Hazardous Materials Regulations)

APPENDIX A

APPENDIX B.—DEFINITIONS AND ACRONYMS

Basic Environmental Health and Safety Training (BEHST)

Code of Federal Regulation (CFR)

Environmental Management System (EMS)

Environmental, health, and safety (EHS)

Glenn Research Center (GRC)

Hazard communication (HAZCOM)

Human Capital Development Division(HCDD

NASA Procedure Requirement (NPR)

Occupational Safety and Health Administration (OSHA)

Safety and Health Division (SHeD)

Standard (STD)

System for Administration Training, and Educational Resources for NASA (SATERN)

Contents

1.0 PURPOSE 2
2.0 APPLICABILITY 2
3.0 BACKGROUND 2
4.0 POLICY 3
5.0 RESPONSIBILITIES 3
5.1 Plum Brook Management Office (PBMO), Facility Project Manager, or Designated Facility Manager/Coordinator 3
5.2 Chief, Facilities Division and Plum Brook Management Office (PBMO) 3
5.2.1 System Managers 4
5.2.2 Configuration Manager 4
5.2.3 Project Manager 4
5.3 Facility Hazard Analysis (FHA) Preparers 4
5.4 Chief, Safety, Health and Environmental Division (SHED) 5
5.4.1 Facility System Safety Program Lead 5
5.5 Facility System Safety Committee 5
5.6 Safety, Health and Environmental Board and Operations Management Council 6
6.0 REQUIREMENTS (*NPR 8715.3, Chapter 8; and NPR 8719.7*) 6
6.1 Facility Safety Management Plan (*NPR 8715.3, Chapter 8; and NASA STD 8719.7, Chapter 5*) 6
6.1.1 Facility Risk Indicator (FRI) (*NPR 8715.3*) 7
6.1.2 Preliminary Hazard List (PHL) (*NPR 8715.3*) 7
6.1.3 Facility Hazard Analysis (FHA) (*NPR 8715.3*) 8
6.1.4 Hazard Analysis Tracking Index (HATI) (*NPR 8715.3*) 8
6.1.5 Facility Configuration Management Process (*NPR 8715.3, paragraph 8.3; and GLP–FB–8820*) 8
6.2 New Facilities and Systems (*NPR 8715.3*) 8
6.3 Existing Facilities and Systems (*NPR 8715.3*) 9
6.4 Facility Hazard Analysis Preparation (*NPR 8715.3*) 9
6.4.1 Facility Hazard Analysis Organization 9
6.4.2 Facility Hazard Analysis Phases of Preparation 10
6.4.3 Hazard Analysis (HA) 11
6.4.4 Risk Assessment 11
6.5 Glenn Research Center Interlock Philosophy 13
6.5.1 Design 13
6.5.2 Engineered Safety Features 13
6.5.3 Safety Devices 13
6.5.4 Warning Devices 13
6.6 Training 14
7.0 RECORDS 14
8.0 REFERENCES 14
APPENDIX A.—DEFINITIONS AND ACRONYMS 15
APPENDIX B.—FACILITY RISK INDICATOR (FRI) EVALUATION 17
APPENDIX C.—FACILITY SAFETY MANAGEMENT PLAN (FSMP) OUTLINE 21

List of Tables

TABLE 6.1.—SEVERITY CATEGORIES 11
TABLE 6.2.—PROBABILITY OF OCCURRENCE GUIDELINES 12
TABLE 6.3.—RISK LEVEL MATRIX 12

List of Figures

Figure 6.1.—GRC Facility System Safety Program activities 9

Chapter 3—Facility System Safety

NOTE: *The current version of this chapter is maintained and approved by the Safety, Health and Environmental Division (SHED). This chapter was created in September 2010. The current version is located on the Glenn Research Center intranet at http://smad-ext.grc.nasa.gov/shed/pub/gsm/gsm-manual.pdf. Approved by Chief of Safety, Health and Environmental Division.*

1.0 PURPOSE

This chapter sets forth the requirements in the Facility System Safety Program for the Glenn Research Center (GRC) at both Lewis Field and the Plum Brook Station. It describes the responsibilities pertaining to facility system safety of supervisors, and employees, including Safety, Health and Environment Division (SHED) personnel.

The GRC Facility System Safety Program exists to ensure the safe and continuous operation of GRC facilities. It is intended to ensure that the appropriate level of safety analysis, oversight, and resources are applied to projects involved in the construction of facilities (CoF) process as well as modifications made to existing facilities.

The GRC Area Safety Committee Safety Permit Process (Glenn Safety Manual, Chapter **1A**) covers the operation of research test systems and central process systems.

2.0 APPLICABILITY

The provisions of this chapter are applicable to all NASA employees and to all other agencies, organizations, and contractor personnel who are involved in facility acquisition, modification, test activities, operations, maintenance, and disposal of facilities at GRC Lewis Field or Plum Brook Station. It is applicable to CoF projects and all facility life-cycle phases.

3.0 BACKGROUND

The GRC Facility System Safety Program includes two major components: safety analysis, which can be in the form of a facility hazard analysis (FHA), standard operating procedure (SOP), safety permit, or other means of documented analysis, and facility configuration management (CM) process, which is detailed in GLP–FB–8820.1, Configuration Control of Facilities.

System safety engineering is an approach used to identify deficiencies in system or facility design and acquisition, modification, associated testing, and operational sequences that can result in an element of risk. System safety is used to assess risk by examining all elements and their interaction in the operating environment. A system safety program ensures the integration of safety engineering within the facility acquisition process. The objectives of a facility system safety program are

- To ensure that hazards inherent to the design and equipment intended for use in the facility are eliminated, or the resultant risk is controlled to an acceptable level
- To maximize operational readiness and mission protection through mishap prevention measures by ensuring that appropriate hazard control measures are designed and constructed into the facility in a timely manner and at minimum cost
- To reduce safety and occupational health retrofit and modification requirements after the design stage
- To ensure that safety and occupational health lessons learned from previously constructed similar facilities are incorporated in to facility designs
- To ensure that modifications do not increase the risk level of a facility

The GRC Facility System Safety Program intends to

- Ensure that the appropriate safety analysis has been conducted; the objectives are to
    - Define the hazards in terms of severity and probability
    - Assess the controls for those hazards
    - Make recommendations toward reduction of the severity and/or probability of occurrence

- Ensure that designated facilities and systems have the appropriate level of allocated safety resources
- Document risk and provide the information to management and operating personnel

The Facility CM Program establishes a baseline and maintains current records for designated systems (e.g., electrical systems) and the relevant documentation (e.g., drawings), showing changes and modifications through the life cycle of the facility. The program allows for proper review of proposed changes.

4.0 POLICY

It is GRC policy that facilities and systems at Lewis Field and the Plum Brook Station shall be designed, operated, and maintained to adequately control hazards likely to cause physical harm to personnel or severe system damage.

The authority for this program is outlined in NASA Procedural Requirement (NPR) **8715.3C**, NASA General Safety Program Requirements, and supported by NASA Standard (STD) 8719.7, Facility System Safety Guidebook, and NPR **8820.2**, Facility Project Requirements. These standards and requirement documents outline specific processes and tasks that are to be carried out for the acquisition and operation of facilities (see Section **6.0**, Requirements).

5.0 RESPONSIBILITIES

Facility system safety is only accomplished through a team effort of individual organizations accepting their roles in the overall objective to maintain the appropriate level of safety analysis, oversight, and resources to projects involved in the CoF process as well as modifications made to existing facilities. Specific responsibilities of individuals or organizations tasked with requirements to support the Facility System Safety Program follow.

5.1 Plum Brook Management Office (PBMO), Facility Project Manager, or Designated Facility Manager/Coordinator

- Identify projects and facility or system changes that must adhere to the Facility System Safety Program and provide the resources necessary to implement the program
- Assist in the determination of the facility risk indicator (FRI) (see Section **6.1.1**)
- Initiate the Facility Safety Management Plan (FSMP)
- Oversee the development and/or review of an FHA (see Section **6.1.3**)
- Verify the hazard controls documented in the FHAs are part of the design and/or operations of the facility
- Oversee the review of applicable updates to the FHAs and revise should any changes occur in the hazards or hazard controls; report risks that meet appropriate criteria to management
- Seek assistance from SHED, as needed, in completing and reviewing FHAs
- Ensure compliance with GRC configuration control requirements (The facility shall not be considered complete and ready for operation without all equipment files and/or facility and system drawings (as-built) being provided to the Configuration Manager for permanent file and drawing updates.)
- Upon completion of the facility construction or modification, assume ownership of the FSMP
- Maintain system safety training records for applicable personnel
- Serve as a member of the Facility System Safety Committee when required to review FRI or FSMPs associated with the Facility Manager's facility

5.2 Chief, Facilities Division and Plum Brook Management Office (PBMO)

- Oversee and manage functions associated with system management, CM, and project management
- Participate in the Facility System Safety Committee to analyze and approve the FSMP, as required, to manage level-1 and level-2 FRIs[kg1] [kg2]

5.2.1 System Managers

- Identify facility system changes that must adhere to the Facility System Safety Program and ensure that the required resources necessary to implement the program are in place
- Ensure identified facilities can be constructed or modified without jeopardizing system requirements or capabilities
- Ensure that any new or unforeseen risks that may arise during the construction or modification of a facility are immediately brought to the attention of the Facility Manager
- Ensure that proper configuration control and management are followed and that all equipment files and/or facility and system drawings are properly updated (The task cannot be closed nor can the facility be considered complete without this occurring.)
- Participate as a member of the Facility System Safety Committee, when required

5.2.2 Configuration Manager

- Manage the identification of projects and facility or system changes that must adhere to the Facility System Safety Program
- Manage the records associated with establishing, maintaining, and utilizing designs, schematics, plans, and graphics associated with GRC facilities and systems
- Maintain the FRI and FMSP as records in the GRC CM process and databases
- Alert the Facility Manager when any new or unforeseen risks that may arise during the construction or modification of a facility
- Ensure that proper configuration control and management are followed and that all equipment files and/or facility and system drawings are properly updated
- Participate as a member of the Facility System Safety Committee

5.2.3 Project Manager

- Identify projects and facility or system changes that must adhere to the Facility System Safety Program and ensure that the required resources necessary to implement the program are in place
- Ensure identified facilities can be constructed or modified without jeopardizing system requirements or capabilities
- Alert the Facility Manager when any new or unforeseen risks that may arise during the construction or modification of a facility
- Ensure that proper configuration control and management are followed and that all equipment files and/or facility and system drawings are properly updated (The task cannot be closed and the facility considered complete without this occurring.)
- Participate as a member of the Facility System Safety Committee, when required

5.3 Facility Hazard Analysis (FHA) Preparers

- Develop and maintain a preliminary hazard list (PHL)
- Participate in the development and maintenance of an FHA
- If SHED is not the primary preparer or facilitator, seek assistance from the SHED, as needed, in completing FHAs and provide completed FHAs to SHED for review
- Present PHL and FHA to the Facility System Safety Committee when an FSMP may be required

5.4 Chief, Safety, Health and Environmental Division (SHED)

- Establish and maintain adequate policies and procedures for the application of the Facility System Safety Program
- Assign a Facility System Safety Program lead to
    - Assist GRC organizations with FHA development and establishment of necessary team membership and other resources
    - Facilitate FHAs, when required
    - Review FHAs
    - Review and assist the effort to establish the FRI
    - Audit the hazard analysis tracking index (HATI) during a project to ensure that hazard controls outlined in the FHA are included during construction
    - Report risks that meet appropriate criteria to management
    - Provide support to the Facility and Project Managers to ensure the FSMP is up to date
- Participate as a member of the Facility System Safety Committee
- Assign members, including the Chairperson, to the Facility System Safety Committee

5.4.1 Facility System Safety Program Lead

- Provide consultation concerning policies and procedures for the application of the Facility System Safety Program
- Assist GRC organizations with FHA development and establishment of necessary team membership and other resource
- Facilitate FHAs, when required
- Review FHAs
- Review and assist the effort to establish the FRI
- Audit the HATI during a project to ensure that hazard controls outlined in the FHA are included during construction
- Report risks that meet appropriate criteria to management
- Provide support to the Facility and Project Managers to ensure the FSMP is up to date
- Participate as the facilitator and recorder for the Facility System Safety Committee

5.5 Facility System Safety Committee

The purpose of the Facility Safety Committee is to discuss, review, and approve or decline the FSMP for any facility requiring an FSMP per NASA STD 8719.7, Facility System Safety Guidebook, and this GRC Safety Manual chapter.

Primary Membership is composed of Chief, SHED; Chief, Facilities Division; Director, Plum Brook Station; and Chief, Testing Division or their designated representatives. Supporting members include Facility Configuration Manager and Facility System Safety Program lead. As-needed members include any Facility Manager, Systems Manager, or Project Manager whose facility or project is being reviewed. The meeting schedule is determined by the Chairperson. The committee's responsibilities include

- Issuing Facility System Safety Committee concurrence for an approved FSMP
- Ensuring FSMP is recorded as part of the specific facility configuration database or records storage process
- Soliciting knowledgeable temporary members needed to evaluate the FSMP associated with specific facilities

5.6 Safety, Health and Environmental Board and Operations Management Council

The Safety, Health and Environmental Board (SHEB) and Operations Management Council (OMC) are responsible for making decisions and setting priorities on risks reported by the project or facility.

6.0 REQUIREMENTS (*NPR 8715.3, Chapter 8; and NPR 8719.7*)

6.1 Facility Safety Management Plan (*NPR 8715.3, Chapter 8; and NASA STD 8719.7, Chapter 5*)

Chapter 8 of NPR **8715.3C** requires that specific safety tasks to be accomplished during construction, operation, maintenance, and final disposition of a facility are documented in an FSMP in accordance with NPR **8820.2**, Facility Project Implementation Guide, and NASA STD 8719.7, Facilities System Safety Guidebook.

NASA STD 8719.7, paragraph 5.2.5.2, requires that an FSMP be created for certain higher risk facilities. These are defined by an FRI of 1 or 2 as discussed below.

The FSMP documents recommended safety efforts for the life cycle of the facility including methods of hazard identification and the resolution process.

The FSMP shall provide a method to ensure that

- A safe design is being implemented in a timely, cost-effective manner
- Hazards associated with the facility, identified during the FHA, are tracked (using HATI) to ensure they are evaluated and eliminated or controlled to an acceptable level throughout the life cycle
- Minimum risk is involved in the design, materials, testing, and operation of the facility
- Changes to the design, made during construction, installation, or testing, do not impact safety
- Facility and system drawings and key operating documents are maintained to properly represent the current condition
- Training is provided for personnel involved in hazardous operations and processes
- Codes, standards, and regulations are met
- Safety milestones meet facility program requirements
- Safety in operation and maintenance is demonstrated and proved
- Facility safety disposal is established with clear procedures and methods

A major portion of the FSMP is identification of hazards and risk through use of an FHA. The FHA is a multistep, team-oriented approach to hazard and risk assessment that begins at the earliest phase of a project and continues throughout the life of the systems involved. Configuration control, or management of change, is also a major portion of the FSMP or any facility system safety program. It is the process that ensures that changes made during the design or construction of new facilities, or proposed changes to existing facilities, are properly reviewed.

The FSMP will include the FRI, the PHL, all FHAs, the HATI, and the configuration control process. These elements are discussed below to provide guidance. Depending on the life-cycle phase of the facility or project and the nature of the systems, other materials and references needed to meet the above requirements of the FSMP should also be included. These may include a reference to required or existing operational safety permits, certification requirements of systems (i.e., pressure system certification), training requirements, chemical management plans, scheduled maintenance of critical equipment, or facility inspections.

The FSMP and the configuration management process will include a method to evaluate all changes to a facility and to determine the proper review path. For example, changes identified as “administrative” or “replacement in kind” normally will not need further system safety review. Changes affecting the configuration of a system will require a system safety engineering analysis. The degree of analysis will depend on the extent and nature of the change and may include a review of SOPs, checklists, engineering drawings, emergency procedures, and training requirements. The FSMP will identify the method of these evaluations and reviews depending on the type of facility or project

status such as new facility or system design and construction (generally CoF), existing facility change requests (FCRs), or operating or test system (safety permit process). A sample FSMP outline is given in Appendix **B**.

6.1.1 Facility Risk Indicator (FRI) (*NPR 8715.3*)

The first step in the system safety process is the determination of the FRI. The FRI classifies the severity of potential hazards inherent to the facility itself: its operations, processes, environment, equipment, potential interfaces, and personnel. The FRI is categorized into four risk indicators ranging from a FRI of 1 (high risk) to a FRI of 4 (minimal risk). A FRI of 1 signifies major risk associated with personnel safety, operational productivity, design effectiveness, environmental impact, and/or other user interfaces. A FRI of 4 indicates negligible or low risk. The FRI is based on the hazards present alone and not the existing or expected mitigation. The mitigation or safeguards are considered in subsequent hazard analysis to assess adequacy of design and safety systems and establish operational risks. The FRI establishes the potential severity and need for a system safety plan over the life cycle of the facility or system. The FSMP is put in place to ensure proper safeguards are maintained for hazards present over the lifetime of the facility.

It is this initial safety assessment that is used to help determine the level of system safety effort required to meet NASA safety requirements. It alerts the Facility or Project Manager and other acquisition managers of the potential safety concerns within a facility. For a new facility, the FRI will be done early in the project life cycle during the project planning and development phase. The determination of a FRI will be performed in accordance with NASA STD 8719.7, Facility System Safety Guidebook (definitions of FRI 1 to 4 are given), and is a cooperative effort between SHED and facility and project personnel. A checklist such as one given in Appendix C may be used to assist in the determination. The potential hazards inherent to the facility are evaluated using the following criteria as evaluation factors:

- Life safety.—hazards that could potentially cause death or serious injury to personnel
- Mission continuity.—failures which could have serious impact on mission capability and/or operability
- Facilities protection.—failures that could cause serious damage to facilities or equipment resulting in significant financial loss
- Environmental impact.—hazards that could have serious impact to the adjacent facilities or operations or to the surrounding community

A narrative explaining the result should be provided and maintained in the FSMP and or facility documentation.

6.1.2 Preliminary Hazard List (PHL) (*NPR 8715.3*)

Concurrent with FRI establishment is the process to develop the PHL. The PHL identifies and lists hazards or areas of concern likely to be present in the facility including the environment in which the facility will be located. The PHL is the baseline for the facility system safety effort and provides input for the FHA. There are various methods used to develop PHL. They include

- Surveying the site
- Interviewing site personnel
- Drawing on expertise in the subject area
- Reviewing lessons learned
- Analyzing similar facilities
- Analyzing available technical data
- Reviewing energy sources
- Reviewing requirements documents
- Reviewing the project management plan

Preparing the PHL must encourage the free flow of ideas among those participating. During the development of the PHL, no hazard identified is to be “thrown out.” Credibility of the hazard will be determined during the analysis process, and noncredible hazards will be eliminated at that time.

6.1.3 Facility Hazard Analysis (FHA) (*NPR 8715.3*)

The FHA is an expansion of the FRI and PHL and is performed and continually revised in the planning and design phases of a project. The assessment of the facility's hazards permits refining and expanding the risk classification of the FRI. It expands upon the PHL and provides the following additional information:

- Details concerning necessary and planned corrective action
- Increased detail of hazards already identified
- More detailed analysis to identify additional hazards

The FHA is used to determine the system safety effort for the remainder of the project. As an expanded version of the PHL, the FHA contains greater detail in three areas. First, hazard control information is added to the identified hazards. Second, a more comprehensive and systematic analysis to identify additional hazards is performed. Third, greater detail on hazards previously identified in the PHL is provided. Detailed knowledge of all operations to be conducted within the facility and any hazards presented by nearby operations is required. Based on the best available data, including lessons learned, hazards associated with the proposed facility design or functions are evaluated for risk severity and probability, together with operational constraints.

If the FHA (see Section **6.4** for preparation) indicates that the facility represents an acceptable level of risk and no further analysis is necessary (see Section **6.4.3**), a list of applicable safety standards and codes are still required. If the facility represents an unacceptable level of risk, methods to control risk must be instituted and the status reported to the SHEB and OMC. The FHA is used to establish an HATI, using the analysis tables, and to identify additional analyses, if necessary. Existing hazard analyses may be used in lieu of developing a new FHA. FHAs are configuration controlled; they shall be changed and distributed in accordance with established processes.

6.1.4 Hazard Analysis Tracking Index (HATI) (*NPR 8715.3*)

The HATI provides a way to track the status of hazard resolution and is merely a continuation of the FHA. The FHA data sheets provide the framework for the HATI. Its purpose is to verify that all the recommendations of the FHA have been implemented and all hazards have been eliminated, accepted, or closed as indicated in the status column of the analysis tables. Hazards identified through other techniques (e.g., failure modes and effects analysis (FMEA)) are also added to HATI for tracking. Use of the HATI starts in the construction phase because this is the first phase in which hazards can be field verified for closure, and it is updated throughout the project life cycle. The field inspection and verification is important to ensure that the safety controls have actually been put into place.

6.1.5 Facility Configuration Management Process (*NPR 8715.3, paragraph 8.3; and GLP–FB–8820*)

A configuration control process shall be in place to meet the requirements of NPR **8715.3C**, paragraph 8.3. This requirement covers facilities at any phase of acquisition through operations and disposal. The configuration control process is a key element of system safety and change management. It ensures that the current systems are represented correctly on drawings and documents, which is imperative for operational and safety maintenance activities. It provides for proper documentation of design or facility changes and for all safety activities. The configuration control procedure shall require evidence of a proper safety review for any proposed modifications as well as prestartup safety reviews. This is especially critical for systems not covered by area safety committees or prior to safety committee involvement. At GRC the configuration control process is defined by GLP–FB–8820, Configuration Control of Facilities.

6.2 New Facilities and Systems (*NPR 8715.3*)

Figure 6.1 shows the GRC Facility System Safety Program as it relates to new facilities shall be integrated into the typical CoF project life cycle.

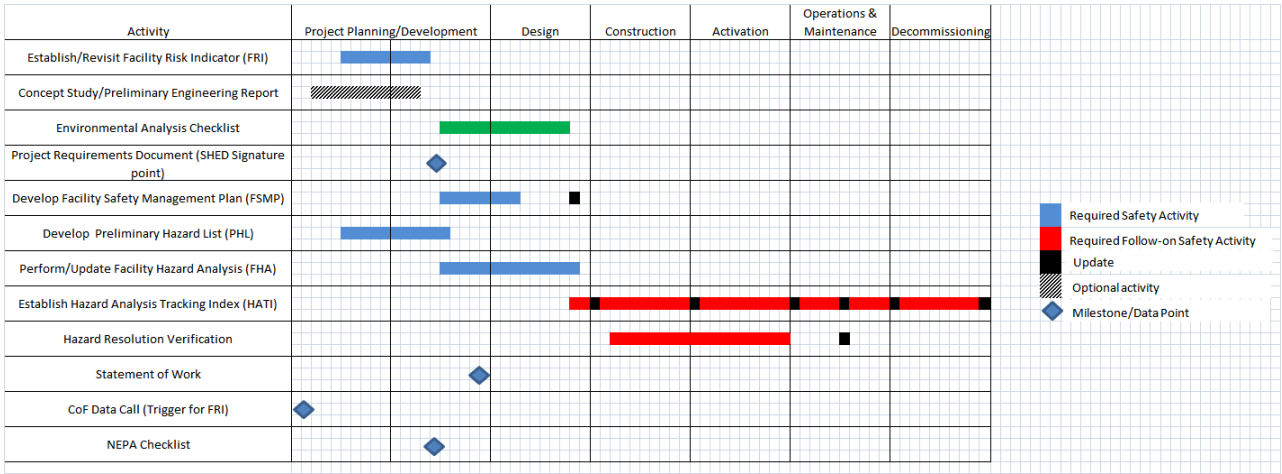

Figure 6.1.—GRC Facility System Safety Program activities.

6.3 Existing Facilities and Systems (*NPR 8715.3*)

For existing facilities, the items listed in Section **6.3** shall be performed as part of an ongoing process. The FRI will be determined for all facilities and the results will be used to prioritize which facilities will undergo the development of PHL and FHA independent of a project framework. Development and maintenance of FSMPs will be the responsibility of the Facility Manager.

6.4 Facility Hazard Analysis Preparation (*NPR 8715.3*)

The organization responsible for the facility to be modified or constructed shall assign someone to be responsible for the preparation of a FHA. The actual preparation should be performed by a team of NASA employees and/or support contractors. The following definitions provide a uniform understanding of the terms related to FHA preparation:

- Hazard description.—identifies the energy source that generates the hazard
- Cause.—describes those items that create or significantly contribute to the existence of the hazard
- Effect.—describes the potential detrimental effects of the hazard and analyzes the flow of energy between the source and the object that is to be protected

The following sections describe the structure and content of a typical FHA.

6.4.1 Facility Hazard Analysis Organization

The FHA is divided into three main sections: introductory matter, text, and analysis tables. A critical items list (CIL) may be incorporated if the facility contains a critical item. The text is further subdivided into subsections common to all facilities although, on a case-by-case basis, additional special-item subsections can be added. The common subsections of the text are the introduction, the facility description, and the safety analysis summary.

6.4.1.1 Introductory Matter

The introductory matter consists of the title page, revision record, list of page revisions, and table of contents.

The title page contains the report title, the name of the facility for which the report was completed, the building number in which the facility is housed, and the FRI associated with the facility. The table of contents lists the major subsections of the FHA and the page number on which each begins. The revision record reflects all changes to a FHA; who prepared, reviewed, and accepted the report/changes and the date it was issued. The required signatures are as follows:

- The “Prepared By” area shall be signed by the individual who prepared the report or change.
- The “Reviewed By” area shall be signed by the designated reviewing authority.
- The “Reviewed By Safety Representative” area shall be signed by a safety professional assigned by SHED.

  NOTE: *Other signatures may be added to include other team members (e.g., project management).*

6.4.1.2 Text

The text section of the FHA consists of the introduction, the facility description, and the safety analysis summary. The introduction identifies the facility, states the purpose and philosophy of the analysis, and explains the risk assessment logic. The facility description provides a brief overview of the subject facility and describes the major facility capabilities, the nature of research conducted, the subsystems, and any special facility features appropriate to the safety analysis. It also includes a facility block diagram that shows the general relationships among the various subsystems. The safety analysis summary contains two sections, as follows

- General observations and recommendations.—addresses the hazards that are general in scope as opposed to specific to a particular subsystem and documents any other fact the FHA preparer feels is relevant
- Tabular summary.—presents a synopsis of the safety analysis of each major subsystem, which is given in detail in the analysis tables (Each hazard shall be assigned a risk level in accordance with the philosophy and guidelines established in Section **6.5**.)

6.4.1.3 Safety Analysis

The safety analysis of the FHA provides a detailed discussion of the hazards and risk assessments. There is typically a separate analysis table for each major subsystem identified on the facility block diagram.

6.4.1.4 Critical Items List (CIL)

The FHA includes a CIL for any facility that has a critical item. A critical item is any item, the single-order failure of which would likely result in death or damage to equipment or property equal to or greater than $1 million. Section **6.4.1.4** provides more details about preparing a CIL.

6.4.2 Facility Hazard Analysis Phases of Preparation

- **Phase I**, **System Definition Phase**.—During this phase, the preparer uses facility-provided documentation to define the system. The facility is divided into manageable subsystems. Examples of such subsystems are high-pressure air, vacuum, model injection, cooling water, test section, nitrogen, and hydrogen. How these subsystems are identified in any given facility depends on the methodology used by the preparer in organizing the FHA to cover every aspect of the facility. For example, in one instance, the model injection component may be a separate subsystem; whereas, in another instance, it may be included as part of the test section subsystem. The important thing is to ensure that all components of the facility are analyzed. Also at this time, a facility block diagram is generated to show the interrelationships among the chosen subsystems.
- **Phase II**.—Fill out the analysis tables using the hazards identified in the PHL development effort. With input from the Facility or Project Team, the preparer adds detail to the FHA. The FHA ensures that a deductive approach is taken in the assessment of the safety implications of the facility and it documents that thought process. Details of how to perform an HA are provided in Section **6.4.3**.
- **Phase III**, **CIL (if required)**.—With the subsystems and hazards defined, the preparer assembles a CIL. A critical item must have the design analyses, in-service inspection and preventive maintenance procedures, installation procedures, and nondestructive testing required to establish and maintain an acceptable probability of occurrence. The requirement for design calculations can be waived for critical items that are proprietary or part of a company's standard product line, providing that the item has been designed to industry consensus codes, a history of acceptable operations of the same or similar products is available, and the use is in compliance with the manufacturer's ratings and recommended applications.

  Examples of proprietary items that meet the design waiver criteria are large rotating machinery for wind-tunnel compressor or drive systems. Critical items listed in a FHA shall be tracked throughout their lifetime for compliance with design, maintenance, and inspection requirements. Pressure components that are standard product lines and built to national consensus codes or standards are not considered critical items. However, these items are covered under GRC's pressure system recertification program to assure system integrity.
- **Phase IV**.—A complete FHA is ready for a SHED review. SHED conducts a thorough and independent review of the FHA. Once the preparer and SHED agree that the FHA is complete, a final project team review is conducted. During this phase, the remaining members of the project team review the FHA.

- **Phase V**.—The FHA is published. After all of the issues are resolved and the FHA is prepared in final format, it shall be formally approved by SHED and the approving authority. Finally, it shall be configuration controlled.

6.4.3 Hazard Analysis (HA)

The HA begins with a detailed exploration of each of the identified hazards that came out of the PHL development effort (e.g., hot surfaces). A team approach is highly recommended for this process.

The team establishes what could cause a hazard to occur, and these become the causes (e.g., personnel error). There could be one or multiple causes for the same hazard. The analyst then quantifies the effects of each hazard in terms of damage, injury, and/or death (e.g., serious injury to personnel). When numerous effects result, only the most severe is noted.

To determine a facility's ability to avoid the occurrence of a hazard or limit the severity of an effect, the team assesses all safeguards including safety devices, instrumentation, procedures, and facility construction. This assessment takes the form of an investigation of the design and operational features that reduce the probability of each individual cause from occurring. In the interest of plausibility, the hazards, causes, and effects are to be confined to credible, as opposed to conceivable, events. They should reflect only those things that could reasonably be expected to occur.

6.4.4 Risk Assessment

The next step in the analysis is the risk assessment. An individual assessment is made and a risk assessment code (RAC) is assigned to each of the identified causes, using the guidance provided in Section **6.4.4.4.** If an assigned risk assessment is unacceptable, as outlined in Section **6.4.4.4**, recommendations are made that would reduce that risk assessment to acceptable limits if implemented. These recommendations can take the form of additional safety devices, design changes, or changes in the SOP.

An alphanumeric risk level, based on both severity and probability of occurrence, shall be assigned to each cause of a hazard. The following paragraphs address how those risk levels are converted into a RAC using GRC's risk matrix.[c3]

6.4.4.1 Severity Category

A severity shall be assigned to each hazard, assuming it will occur[c4]. In this analysis, the worst possible result is to be assumed with no consideration being given to abatement techniques incorporated in the system design or to the use of procedures. The severity category provides a relative measure of the worst possible consequences resulting from personnel error, environmental conditions, design inadequacies, procedural deficiencies, and subsystem or component failure/malfunction. Table 6.1 lists the severity categories.

TABLE 6.1.—SEVERITY CATEGORIES

Category	Personal illness or injury	Equipment loss, $K	Downtime	Data integrity	Environmental effect
I (catastrophic)	Death	>1000	>4 months	Data never recoverable or primary program objectives lost	Long-term (>5 years) environmental damage or requiring >$1 million to correct and/or in penalties
II (critical)	Severe injury or occupational illness	1000 to 250	4 months to 2 weeks	Repeat test program	Medium-term (1 to 5 years) environmental damage or requiring $250,000 to $1 million to correct and/or in penalties

TABLE 6.1.—SEVERITY CATEGORIES

Category	Personal illness or injury	Equipment loss, $K	Downtime	Data integrity	Environmental effect
III (marginal)	Minor injury or occupational illness	250 to 25	2 weeks to 1 day	Repeat test period	Short-term (<1 year) environmental damage or requiring $25,000 to $250,000 to correct and/or in penalties
IV (negligible)	No injury or illness	25 to 1	<1 day	Repeat data point or data requires minor manipulation or computer rerun	Minor environmental damage, readily repaired, and/or requiring $1000 to $25,000 to correct and/or in penalties

6.4.4.2 Probability of Occurrence Level

A probability of occurrence shall be assigned to each cause of a hazard. The probability of occurrence provides a measure of system safety by evaluating the system design in conjunction with abatement techniques, inspections, tests, and operating procedures. The probability of occurrence is the probability that a failure will occur sometime during the planned life of the system. The probability level shall be qualitatively based upon engineering judgment with appropriate guidelines. Table 6.2 explains those guidelines.

TABLE 6.2.—PROBABILITY OF OCCURRENCE GUIDELINES

Level	Descriptive word	Qualitative definition	Quantitative definition
A	Frequent	Likely to occur repeatedly in system/component life cycle	$x > 10^{-1}$
B	Probable	Likely to occur several times in system/component life cycle	$10^{-1} \geq x > 10^{-2}$
C	Occasional	Likely to occur at sometime in system/component life cycle	$10^{-2} \geq x > 10^{-3}$
D	Remote	Not likely to occur in system/component life cycle, but possible	$10^{-3} \geq x > 10^{-6}$
E	Improbable	So unlikely, it can be assumed occurrence may not be experienced	$10^{-6} \geq x$
F	Impossible	Occurrence is physically impossible	

6.4.4.3 Establishing a Risk Assessment Code

First, the effect of a hazard is evaluated in terms of severity (I, II, III, or IV). Next, the probability of occurrence (A, B, C, D, or E) is determined for each cause of the hazard. Using the severity of the hazard, each cause is assigned its own unique alphanumeric risk level (e.g., IA, IIB, or IIIC). Finally, using the two-dimensional risk matrix, each risk level is translated into a RAC (RAC 1, RAC 2, RAC 3, etc.). In Table 6.3, RAC 1s include blocks IA, IB, and IIA. RAC 2s include blocks IIB, IIIA, and IC. All other blocks are RAC 3s or higher.

TABLE 6.3.—RISK LEVEL MATRIX

Risk assessment code (RAC)	A frequent	B probable	C occasional	D remote	E improbable
I (catastrophic)	1	1	2	3	4
II (critical)	1	2	3	4	5
III (marginal)	2	3	4	5	6
IV (negligible)	3	4	5	6	7

6.4.4.4 Implications of a Given Risk Assessment Code

A RAC is a measure of the severity of a hazard versus the probability that the event will occur. As such, its value has implication of what shall be done prior to operation of a facility.

Table 6.3 shows RAC 1 and RAC 2 are the most serious of the levels of risk assessment. Accordingly, it is in the best interest of all concerned to eliminate them through redesign, safety devices, special operating procedures, or combinations of such methods. The implications of the RACs shall be listed with the hazards analysis documentation in the FSMP. An example is given below.

- RAC = (1 or 2): unacceptable risk.—The operation cannot go forward without further hazard mitigation.
- RAC = (3): undesirable risk.—Director of Safety and Mission Assurance Directorate must review and approve.

- RAC = (4, 5, 6 or 7): acceptable risk.—This RAC is suitable for the project to review and accept the risk in conjunction with the cognizant safety authority (SHED or area safety committee). Acceptance of the risk associated with these hazards is acknowledged by signing the FHA.

6.5 Glenn Research Center Interlock Philosophy

To conduct business at GRC, large power sources, pressurized gases, vacuums, hazardous materials, heavy machinery, and many other potentially dangerous conditions are present. The integration of safety into such an operation ensures the protection of the community, operating personnel, equipment, and the environment.

GRC's cornerstone strategy to achieve safety is its interlock philosophy, which is described below.

- A credible single-order failure that can jeopardize personnel or major equipment requires an interlock or protective device to prevent its occurrence. A safety interlock or protective device must be independent of the failure mode and cannot be compromised by occurrence of the credible single-order failure.
- When an independent safety interlock or device cannot be provided because of the utilization of a common component or path, then an independent component and/or path is necessary (e.g., hardwired backup of a software safety interlock or device).
- The safety interlock or device, unless it is verified automatically during startup (as a permissive), shall be periodically verified for operation. Period of performance shall be established by the safety analysis and specified in the FHA.
- Safety interlocks and devices, either software or hardware, must be under configuration control at the project level both before and during shakedown. Commencing at the operational readiness review (ORR), these safety interlocks and devices shall come under CM. At no time shall software changes be made while the facility is online (in operation).
- Forcing of safety interlocks or devices during facility operation (temporary changes to complete a run or to troubleshoot a problem) must be in accordance with an approved procedure and must have the permission of the SHED chief or a designated alternate.
- Failures of catastrophic proportions identified by the FSMP shall be assessed individually in the safety analysis and redundant safety interlocks or devices provided.

The above philosophy must be pursued regardless of the type of process control or complexity of the research facility. Several techniques can be used to achieve these aims to permit the necessary research to be accomplished. These techniques are discussed in the following paragraphs, in order of effectiveness, beginning with the most effective.

6.5.1 Design

The first line of safety is the initial design of a facility. Safety and interlock policies must be of equal and simultaneous consideration with research aims in the initial design phase of a facility. It is at this point that the best and the most cost-effective safeguards can be incorporated into a system.

6.5.2 Engineered Safety Features

Once a facility is constructed, additional safety margins can be attained by ad hoc engineered safety features. Such devices are an integral, permanent part of the facility and its routine operation. Like design features above, they are to be passive in nature and require no special action to cause them to be effective.

6.5.3 Safety Devices

Adjunct devices, such as goggles, hard hats, and safety bars, enhance safety. However, they require a conscious act on the part of the operator to become useful. Although they may appear cost effective, their effectiveness is moot if they are not employed.

6.5.4 Warning Devices

Visual and audible means to alert personnel to hazards are economical, but they are not barriers. Many of the techniques in the previous paragraphs are barriers. The term "barriers" implies that such devices prevent the

occurrence of hazards. Warning devices are effective only when personnel are aware of them in sufficient time to react; and do, in fact, react.

6.6 Training

The introduction of the human element into a perfectly designed and controlled hardware system brings with it a potential for unexpected results. To minimize the occurrences of operator errors, a thorough training program shall be written and verified. If operator training and procedure compliance are to be completely effective in lowering the probability of hazards to an acceptable level, they must be coupled with some, if not all, of the foregoing abatement techniques.

Personnel involved in leading or reviewing hazard analyses for large projects or high-risk facilities (FRI of 1 or 2) or for multiple projects, shall take a course in hazard analysis or system safety. These classes provide instruction in various hazard methodology, hazard identification, and risk analysis. The NASA Safety Training Center (NSTC) offers two classes: SMA–SAFE–NSTC–0001, Facility System Safety, and SMA–SAFE–NSTC–0002, System Safety Fundamentals. Other comparable classes may be substituted.

7.0 RECORDS

The FSMP shall be maintained in a file by the Facility or Project Manager depending on project status. This includes all revisions of FHAs, FRIs, PHLs, and special documents used during the reviews. Specific revisions of drawings used and/or hand -marked notes to clarify the FHA texts are useful along with shutdown or alarm descriptions. The GRC Configuration Manager shall designate the recordkeeping requirements for all final true copies of the FSMP when the FSMP is approved by the Facility System Safety Committee.

8.0 REFERENCES

Document Number	Document Name
NPR **8715.3C**	NASA General Safety Program Requirements
NPR **8820.2**	Facility Project Requirements
NASA STD 8719.7	Facility System Safety Guidebook
GLP–FB–8820.1	Configuration Control of Facilities
GLM–QS–1700.1	Glenn Safety Manual, Chapter **1A**, Glenn Safety Permit System

APPENDIX A.—DEFINITIONS AND ACRONYMS

Critical item.—Any item, the single-order failure of which would likely result in death or damage to equipment or property equal to or greater than $1 million.

Critical items list (CIL)

Configuration management (CM).—A field of management that focuses on establishing and maintaining consistency of a system's performance and its functional and physical attributes with its requirements, design, and operational information throughout its life cycle.

Construction of facilities (CoF)

Facility.—Something that is built, installed, or established to serve a particular purpose and often comprises subsystems.

Facility change request (FCR)

Facility configuration management.—Establishes and maintains a baseline for designated systems (e.g., electrical systems) and the relevant documentation (e.g., drawings).

Facility hazard analysis (FHA).—A multistep, team-oriented approach to hazard and risk assessment that begins at the earliest phase of a project and continues throughout the life of the systems involved.

Facility life cycle.—Includes the design, acquisition, modification and test activities, operations and maintenance, and disposal of a facility.

Facility Manager.—Provides primary point-of-contact for the planning and scheduling of test programs and activities in the GRC test facilities. Provides the overall oversight and strategic management to ensure customers' requirements are satisfied and that the facilities are available and optimally utilized. Responsible for advocating, developing, scheduling, and maintaining the major GRC test facilities in a safe, reliable, and effective manner. Responsible for the systems management, engineering development and commonality of the instrumentation, controls, and data acquisition systems in GRC test facilities.

Facility Safety Management Plan (FSMP).—The plan defining tailored safety requirements, including organizational responsibilities, resources, milestones, methods of accomplishment, depth of effort, and integration with other program engineering and management activities and related systems.

Failure modes and effects analysis (FMEA).—A procedure in operations management for analysis of potential failure modes within a system for classification by severity or determination of the effect of failures on the system.

Facility risk indicator (FRI).—Classifies the severity of potential hazards inherent to the facility itself: its operations, processes, environment, equipment, potential interfaces, and personnel.

Glenn Research Center (GRC)

Hazard.—A state or a set of conditions, internal or external to a system that has the potential to cause harm.

Hazard analysis (HA).—A process used to assess risk. The result of a hazard analysis is the identification of unacceptable risk and the selection of means of controlling or eliminating them.

Hazard analysis tracking index (HATI).—Part of the FHA, its purpose is to provide the user with a way to track the status of hazard resolution.

Hazard cause.—Describes those items that create or significantly contribute to the existence of the hazard.

Hazard description.—Identifies the energy source that generates the hazard.

Hazard effect.—Describes the potential detrimental effects of the hazard and analyzes the flow of energy between the source and the object that is to be protected.

NASA Procedural Requirement (NPR)

NASA Safety Training Center (NSTC)

Operations Management Council (OMC)

Operational readiness review (ORR)

Plum Brook Management Office (PBMO)

Preliminary hazard list (PHL).—The purpose of the PHL is to identify and list hazards or areas of concern likely to be present in the facility including the environment in which the facility will be located.

Probability of occurrence.—Probability that a failure will occur sometime during the planned life of the system.

Project Manager.—Individual responsible for the overall project from concept through completion, satisfying the project requirements, and who provides the primary interface with the customer or end user.

Risk.—Exposure to a chance of loss or damage or the combination of the hazard severity with the likelihood of its occurrence.

Risk assessment.—Consists in an objective evaluation of risk in which assumptions and uncertainties are clearly considered and presented.

Risk assessment code (RAC)

Safety analysis.—A systematic procedure for analyzing systems to identify and evaluate hazards and safety characteristics.

Safety, Health and Environmental Board (SHEB).—Serves as Glenn Research Center's safety, health, and environmental policy, and decisionmaking board. SHEB is responsible for the overall direction of the Center's safety, health, and environmental program.

Safety, Health and Environmental Division (SHED)

Standard (STD)

Standard operating procedure (SOP)

Subsystem.—Set of interacting or interdependent entities forming an integrated whole;examples of such subsystems are high pressure air, vacuum, model injection, cooling water, test section, nitrogen, hydrogen, and so forth.

Support service contractor (SSC)

APPENDIX B.—FACILITY RISK INDICATOR (FRI) EVALUATION

Approximately how many persons (contractors and civil servants) reside in your facility?

What is the primary function of your facility?

What programs/projects reside in your facility? (List major)

Could the loss of your facility have a serious impact on GRC's mission capability and/or operability? (Briefly explain)

APPENDIX B.—FACILITY RISK INDICATOR (FRI) EVALUATION CHECKLIST (CONTINUED)

A credible failure or mishap involving inherent hazards at your facility may cause (select one)

a. loss of life, permanent disability, or serious occupational illnesses to one or more persons

b. permanent disability to one or more persons

c. occupational injury or illness resulting in lost workdays or restricted duty

d. a first aid case

A credible failure or mishap involving inherent hazards at your facility may cause (select one)

a. damage to equipment or property in excess of $500,000

b. damage to equipment or property from $250,000 to $500,000

c. damage to equipment or property from $25,000 to $250,000

d. damage to equipment or property less than $25,000

A credible failure or mishap involving inherent hazards at your facility may cause (select one)

a. a loss of facility operational capability for 1 month or greater

b. a loss of facility operational capability from 2 to 4 weeks

c. a loss of facility operational capability from 1 day to 2 weeks

d. a loss of facility operational capability of less than 1 day

A credible failure or mishap involving inherent hazards at your facility may have an environmental impact to the adjacent facilities or operations or to the surrounding community resulting in (select one)

a. irreversible severe environmental damage that violates law or regulation

b. reversible environmental damage causing a violation of law or regulation

c. mitigatable environmental damage without violation of law or regulation where restoration activities can be accomplished

d. minimal environmental damage not violating law or regulation

APPENDIX B.—FACILITY RISK INDICATOR (FRI) EVALUATION CHECKLIST (CONTINUED)

Acoustical Radiation

- ☐ Equipment Noise
- ☐ Ultrasonic Cleaners
- ☐ Compressors

Corrosive

- ☐ Acids
- ☐ Caustics
- ☐ Natural Chemicals (Soil, Air, Water)
- ☐ Decontamination Solutions

Electrical

- ☐ Battery Banks
- ☐ Diesel Units
- ☐ High Lines
- ☐ Transformers
- ☐ Wiring
- ☐ Switchgear
- ☐ Underground Wiring
- ☐ Cable Runs
- ☐ Service Outlets and Fittings
- ☐ Pumps
- ☐ Motors
- ☐ Heaters
- ☐ High Voltage Sources
- ☐ Electrostatic Sources (low humidity)

Kinetic-Rotational

- ☐ Centrifuges
- ☐ Motors
- ☐ Pumps
- ☐ Cooling Tower Fans
- ☐ Cafeteria Equipment
- ☐ Laundry Equipment
- ☐ Gears
- ☐ Shop Equipment (Grinders, Saws, Brushes, etc.)
- ☐ Floor Polishers

Kinetic-Linear

- ☐ Cars
- ☐ Trucks
- ☐ Fork Lifts
- ☐ Carts
- ☐ Dollies
- ☐ Obstructions
- ☐ Shears
- ☐ Presses
- ☐ Crane Loads in Motion
- ☐ Pressure Vessel Blowdown
- ☐ Power Assisted Driving Tools

Explosive Pyrophoric

- ☐ Caps
- ☐ Primer Cord
- ☐ Dynamite
- ☐ Dusts
- ☐ Hydrogen (Inc. Battery Banks and Water Electrolysis)
- ☐ Gases-Other
- ☐ Nitrates
- ☐ Electric Squibs
- ☐ Peroxides-Superoxides

Propellant**Flammable Materials**

- ☐ Packing Materials
- ☐ Rags
- ☐ Gasoline (Storage & in Vehicles)
- ☐ Lubrication Oil
- ☐ Coolant Oil
- ☐ Paint Solvent
- ☐ Diesel Fuel
- ☐ Buildings and Contents
- ☐ Trailers and Contents
- ☐ Grease
- ☐ Hydrogen (Including Battery Banks)
- ☐ Gases - Other
- ☐ Spray Paint
- ☐ Solvent Vats

Pressurized Systems

- ☐ Vessels (stationary or mobile)
- ☐ Cryogenic fluids

Electromagnetic and Particulate Radiation

- ☐ Radioactive Sources
- ☐ Waste and Scrap
- ☐ Contamination
- ☐ Irradiated Experimental and Reactor
- ☐ Electric Furnace
- ☐ Blacklight (e.g., Magniflux)
- ☐ Laser
- ☐ Medical X-ray
- ☐ Radiography Equipment & Sources
- ☐ Welding
- ☐ Electric Arc—Other (High Current Circuits)
- ☐ Electron Beam
- ☐ Radar
- ☐ Alternating Current (AC) Motors

Thermal (Except Radiant)

Mass, Gravity, Height

- ☐ Human Efforts
- ☐ Stairs
- ☐ Lifts
- ☐ Cranes
- ☐ Bucket Truck
- ☐ Trucks
- ☐ Slings
- ☐ Hoists
- ☐ Elevators
- ☐ Jacks
- ☐ Scaffolds and Ladders
- ☐ Crane Cabs
- ☐ Pits
- ☐ Excavated Doors
- ☐ Elevated Doors
- ☐ Vessels

- ☐ Convection
- ☐ Heavy Metal Weld Preheat
- ☐ Exposed Steam Pipes
- ☐ Electric Heaters
- ☐ Fire Boxes
- ☐ Lead Melting Pot
- ☐ Electrical Wiring & Equipment
- ☐ Furnaces

Notes:

_____

_____

_____

_____

_____

_____

_____

APPENDIX C.—FACILITY SAFETY MANAGEMENT PLAN (FSMP) OUTLINE

I. Facility/system description

   A. Purpose, major systems, facility/system boundaries, general physical description

II. Facility risk indicator (FRI)

   A. Including: basis, supporting data, hazard list

   B. Periodic reviews of the FRI, facility hazards

III. Facility system safety organization

   A. Facility/System Manager

   B. Facility safety representative

   C. Center safety point of contact

   D. Center area safety committee with jurisdiction

   E. Facility/system engineer(s)

   F. Outline of responsibilities for the above

   G. Responsibilities relative to the facility safety program given below

IV. Facility System Safety Methodology

   A. Configuration management (CM) process

      1. References center CM programs and procedures as appropriate and lists specific or additional requirements.

      2. List specific design and safety review processes to be used depending on system type and status—ensure all required safety reviews are completed at the appropriate time (includes approval requirements)

         a) Center procedures for construction of facilities projects

         b) Facility change request procedures for facility or system changes

         c) Safety permit requests and change review for operational (test or research) systems including training requirements, scheduled maintenance of critical equipment, critical alarms, emergency shutdown systems and procedures

      3. Specific facility safety documentation process

   B. Hazard analysis process

      1. List of systems to be reviewed

      2. Type of review and schedule requirements

      3. Risk analysis methods

         a) Severity, probability, and risk codes (matrix) to be used

      4. Hazard Analysis Tracking Index (HATI)

         a) Verification/status of recommendations and approved mitigation

   C. Emergency plans

   D. Schedule of safety activities

Contents

1.0 PURPOSE....2
2.0 APPLICABILITY....2
3.0 BACKGROUND....2
4.0 POLICY....2
5.0 RESPONSIBILITIES....2
5.1 Supervisor shall....2
5.2 Educational Programs Office, Research and Technology, Chief shall....2
5.3 Mentor shall....2
5.4 Student shall....3
5.5 Safety and Health Division Chief or designee(s) shall....4
5.6 Human Capital Development Branch....4
6.0 REQUIREMENTS....4
6.1 Student training....4
6.2 Mentor documentation....4
6.3 Prohibited Student Activities....5
6.3.1 Hazardous Occupations Orders....5
7.0 RECORDS....6
8.0 REFERENCES....6
APPENDIX A.—DEFINITIONS AND ACRONYMS....7
APPENDIX B.—HAZARDOUS OCCUPATIONS ORDERS (HOS) FOR NONAGRICULTURAL EMPLOYMENT....11
APPENDIX C.—VERIFICATION ELEMENT SUMMARY....16
APPENDIX D.—SAFETY, HEALTH AND ENVIRONMENTAL DIVISION (SHED) STUDENT CHECKLISTS FOR GRC....17

List of Tables

Table 6.1.—Hazardous Occupation Order Number Description....6

Chapter 4—Student Safety and Health

NOTE: *The current version of this chapter is maintained and approved by the Safety and Health Division (SHeD). The creation date of this chapter was May 2011. The current version is located on Glenn intranet at http://smad-ext.grc.nasa.gov/shed/pub/gsm/gsm-manual.pdf. Approved by Chief of Safety and Health Division.*

1.0 PURPOSE

This chapter describes policies and procedures and assigns responsibilities pertaining to Environmental, Health, and Safety (EHS) training for NASA Glenn Research Center (GRC) students and mentors.

NOTE: *This chapter is an overview of GRC's EHS training program. Section **6.1** of this document identifies all the required training all Students shall complete.*

2.0 APPLICABILITY

This chapter is applicable to all civil servant and contractor employees and summer program students (this includes students that are under the age of 18 and are considered a minor) assigned to GRC sites and to any NASA-controlled, Government-owned facilities associated with GRC. This includes any student who comes to GRC for a shadowing or internship program who is here for five days or more.

3.0 BACKGROUND

Employees and students need not only technical skill to do their jobs properly, they also shall have appropriate training to perform their work safely and with methods that are protective of the safety and health of the workforce, as well as the environment.

Occupational Safety and Health Administration (OSHA) regulations pertaining to basic program elements for Federal employees (29 Code of Federal Regulations (CFR) 1960) include provisions for safety and health training for supervisors (29 CFR 1960.55) and employees (29 CFR 1960.59) that are pertinent to the work being performed. In addition, training requirements described by Environmental Protection Agency regulations, as well as NASA environmental policies apply to certain personnel at GRC. In light of the many regulations and guidance documents aimed at protecting the safety and health of the work force, as well as the environment, this chapter clarifies the responsibilities and requirements pertaining to EHS training at GRC.

4.0 POLICY

It is the policy of GRC to operate in a manner that provides a safe and healthful workplace for all employees, including the health and safety of minors under the age of 18 and summer staff, to comply with all applicable regulations. These will include OSHA 29 CFR Parts 1960, and 1910, NASA Safety and Occupational Health Policy Directives (NPRs), Ohio Laws and rules for minors, U.S. Department of Labor Wage and Hour Division, Child Labor Bulletin 101, and the Wage and Hour (WH) Division 1330.

5.0 RESPONSIBILITIES

5.1 Supervisor shall

- Support mentors in order to host a student in providing a safe, healthy, and environmentally responsible work experience.

5.2 Educational Programs Office, Research and Technology, Chief shall

- Reinforce policy to their students by supporting Federally mandated training.

5.3 Mentor shall

- Ensure students complete all required training (see Section **6.1**, Student Training).
- Complete a NASA C–237 form, Personal Protective Equipment (PPE) Hazard Assessment Survey and Analysis form with the student. PPE use may trigger additional training requirements. Submit the form to

SHeD for review. After the C–237 has been reviewed and approved by SHeD, the mentor shall retain a copy for reference and records.

- Encourage students to ask questions about tasks or procedures that are unclear or not understood.
- Complete the SHeD Student Checklist upon initial assignment with the student (see Appendix **D**).
- Review the Building Emergency Information and Quick Reference Guide for each building the students work in with their mentors (see GSM Chapter **27**, Building Emergency Evacuation Plan Program).
- Mentors shall be responsible for the accountability of their students in the event of emergency evacuation.
- Require use of the Buddy System (see GSM Chapter **22**, Buddy System).
- Inform students of potential hazards in their workarea: review safety procedures, review Laboratory Safety Operating Procedures (LSOP) if applicable (for Chemistry lab workers).
- Review pertinent Material Safety Data Sheets (MSDSs) relevant to the task and workarea with the students.
- Ensure student's work location is a safe one.
- In the event of an incident, mishap, or injury, work with the area supervisor to complete a NASA Incident Reporting Information System (IRIS) report.

5.4 Student shall

- Successfully complete the required training: Environmental Management Systems (EMS), Hazard Communication (HAZCOM), and Basic Environmental Health and Safety Training (BEHST).
- Complete checklist with mentors on their first day (see Appendix **D**).
- Report to their mentor or responsible supervisor if they notice any safety or health hazards (This is part of the SHED Student Checklist, see Appendix **D**.).
- Use required PPE (safety clothing, hard hats, safety eyewear, and/or hearing protection) and get training on how to use them properly from their mentor or contact SHED based on their C–237 PPE Hazard Assessment Survey and Analysis form.
- When PPE use is required, students shall receive SHeD-approved or delivered PPE awareness training and receive specific PPE training from their mentor.
- Follow safe work practices, as directed by their mentor and/or employer.
- Ask questions.
- Tell their mentor or area supervisor if they feel threatened or endangered at work (see NPD 1600.3 Policy on Prevention of and Response to Workplace Violence).
- Be aware of their environment at all times.
- Review the Building Evacuation Plan for each building they work in with their mentor or area supervisor. (See Building Emergency Information and Quick Reference Guide and GSM Chapter **27** Building Emergency Evacuation Plan Program.)
- Be involved in establishing lessons learned or improving their worksite safety and health program.
- Trust their instincts. If student is asked to perform a task that seems unsafe or makes he or she uncomfortable, the student is to check with their mentor before performing the task. Keeping safe is the first responsibility.
- Use proper waste disposal procedures per requirements of the mentor or area supervisor.
- Avoid prohibited practices, see Section **6.3** and Appendix **B** with the Hazardous Occupations Orders specifications.

5.5 Safety and Health Division Chief or designee(s) shall

- Develop and update the written program as required, reviewing once annually.
- Review checklists.
- Complete periodic field reviews, findings and/or results regarding student awareness of EHS issues shall be provided to the appropriate Program Manager.
- Provide relevant training.
- Provide Student Program Managers of any changes to the mandatory safety training for students.
- Review completed forms.
- Review students' C-237 PPE Hazard Assessment Survey and Analysis forms.
- Deliver or approve PPE awareness training when it is applicable.
- Complete hazard assessments when required.
- Recommend medical evaluations where required. Example, see Respirator Program (see OHPM Chapter **4,** Respiratory Protection Program)
- Ensure conformance with GRC EHS program requirements.
- Provide MSDSs if needed.
- Report safety violations pertaining to students in accordance with SHeD processes: permit reviews, building inspections, hazard assessments, audits, etc.
- Review incident reports and proposed corrective actions (see GSM Chapter **2**, Safety, Health and Environmental Training, paragraph 5.4)

5.6 Human Capital Development Branch

See GSM Chapter **2**, Safety, Health and Environmental Training, paragraph 5.5.

6.0 REQUIREMENTS

6.1 Student training

The following required training shall be completed by students:

- EMS
- HAZCOM
- BEHST
- Other safety, health, or environmental training may be required depending on the students assignment(s) and work location, (PPE is one example if applicable).

6.1 Verification.—Program manager must let Human Capital Development Branch (HCDB) know who need a particular course then HCDB assigns the course and tracks for completion in System for Administration, Training and Educational Resources for NASA (SATERN). All on-line training is tracked through SATERN by HCDB.

6.2 Mentor documentation

- Mentors shall complete a SHeD Student Safety Checklist (see Appendix **D**) and submit to SHeD for review and approval.

6.2 Verification.—A list of who the mentors/students are shall be sent to SHeD from the various programs so that SHeD can e-mail checklists to mentors to complete and return to SHeD. (See Checklist in Appendix D)

- Mentors and students shall complete Form PPE C-237, Hazard Assessment Survey and Analysis, and return it to SHeD

Verification.—PPE C-Form 237 Hazard Analysis Form shall be completed by mentors/students and returned to SHeD.

- Mentors shall review building emergency and evacuation procedures with students.

(See Building Emergency Information and Quick Reference Guide and GSM Chapter **27**, Building Emergency Evacuation Plan Program.)

6.3 Prohibited Student Activities

To ensure the safety and health of students they shall not (prohibitions) perform the following activities.

- No operating handheld cell phones while driving. Texting while you are walking is discouraged; this could result in a slip or trip!
- Do not use portable media players or personal electronic devices (ear buds, etc.) in test cells, labs, or other environments that may contain safety hazards.
- Do not use equipment or perform tasks that you have not been trained on.
- Do not engage in horseplay or unsafe acts.
- Do not cross barricades.

6.3.1 Hazardous Occupations Orders

The Hazardous Occupations Orders (HOs) for Nonagricultural Employment shall be followed.

The Fair Labor Standards Act (FLSA) defines a minimum age of 18 years for any nonagricultural occupations which the Secretary of Labor "shall find and by order declare" to be particularly hazardous for 16- and 17-year-old persons, or detrimental to their health and well-being. This minimum age applies even when the minor is employed by the parent or person standing in place of the parent.

There are exceptions to some of these HOs that permit children younger than age 16 in agriculture, and children younger than age 18 in all other industries, to do particularly hazardous work if they are apprentices or student-learners.

> ***NOTE****: The Student Learner programs can be extended into the summer months to include employment at NASA GRC. Students in these programs have already had safety and OSHA hazardous training and have been approved by the State of Ohio to use power tools, table saws, drills, mills etc. NASA GRC can partner with the Cleveland Public School District and other Northeast Ohio Vocational School Districts to create an exceptional engineering technician feeder system that will allow GRC to engage, inspire, educate and employ the next generation of NASA Engineering Technicians.*

The 17 HOs apply either on an industry basis, specifying the occupations in the industry that are not permitted, or an occupational basis irrespective of the industry in which found. Some of the HOs contain limited exemptions. As such, students shall not participate in the following operations at GRC.

Table 6.1.—Hazardous Occupation Order (HO) Number Description

HO number	Description
1	Manufacturing and storing of explosives
5[a]	Power-driven woodworking machines
6	Exposure to radioactive substances
8[a]	Power-driven metal-forming, punching, and shearing machines
12[a]	Power-driven balers, compactors, and paper processing machines
13	Manufacturing bricks, tile, and kindred products
14[a]	Power-driven circular saws, band saws, chain saws, guillotine shears, wood chippers, and abrasive cutting discs
15	Wrecking, demolition, and ship breaking operations
16[a]	Roofing operations and all work on or about a roof
17[a]	Excavation operations

[a] These HOs provide limited exemptions for 16- and 17-year-olds who are bona fide student-learners and apprentices. (See Appendix **B**).

7.0 RECORDS

- SHeD Students Checklists, reviewed, approved, and maintained by SHeD.
- PPE Form C-237, maintained by student mentors

8.0 REFERENCES

Document number	**Document Name**
GLM–QS–1700.1	NASA Glenn Safety Manual, Chapter 22, Glenn Buddy System
29 CFR, Subpart E of Part 570	The Hazardous Occupations Orders (HOs) for Non agricultural Employment orders
29 CFR Part 1910	Occupational Safety and Health Administration
29 CFR Part 1960.8(a)	Occupational Safety and Health Administration
29 CFR Part 1960 .8(b)	Occupational Safety and Health Administration
29 CFR Part 1959(a)	Training of Employees and employee representatives
NPD 1600.3	Policies on Prevention of and Response to Workplace Violence
NPR 8715.3C (7.2.1)	Safety Training and Personnel Certification
GLM–QS–1700.1	NASA Safety Manual, Chapter 27, Building Emergency Evacuation Plan Program
Human Capital Development Branch (HCDB)	Emergency and Evacuation Procedures Quick Reference Guide
Human Capital Development Branch (HCDB)	GRC Required Training Process
HCDB Required Training Request Form	C–482

APPENDIX A.—DEFINITIONS AND ACRONYMS

Abrasive cutting disc.—A machine equipped with a disc embedded with abrasive materials used for cutting materials.

American National Standard Institute (ANSI)

Alcohol, Tobacco, Firearms and Explosives (ATF)

Applicable ANSI Standard.—American National Standard Institute Standards or a newer standard that the Secretary of Labor has certified as being as protective of minors as those listed. The ANSI standards for scrap paper balers and paper box compactors govern the manufacture and modification of the equipment, the operation and maintenance of the equipment, and employee training.

Baler.—A powered machine designed or used to compress materials other than paper and cardboard boxes, with or without binding, to a density or form that will support handling and transportation as a material unit without requiring a disposable or reusable container.

Band saw.—A machine equipped with an endless steel band having a continuous series of notches or teeth, running over wheels or pulleys, used for sawing materials.

Basic Environmental Safety and Health Training (BEHST)

Chain saw.—A machine that has teeth linked together to form an endless chain used for cutting materials.

Circular saw.—A machine equipped with a thin steel disc having a continuous series of notches or teeth on the periphery, mounted on shafting, and used for sawing materials.

Code of Federal Regulations (CFR)

Compactor.—A powered machine that remains stationary during operation, designed or used to compact refuse other than paper or cardboard boxes into a detachable or integral container or into a transfer vehicle.

Crane.—A power-driven machine for lifting and lowering a load and moving it horizontally, in which the hoisting mechanism is an integral part of the machine. The term shall include all types of cranes, such as cantilever gantry, crawler, gantry, hammerhead, ingot pouring, jib, locomotive, motor-truck, overhead traveling, pillar jib, pintle, portal, semi-gantry, semi-portal, storage bridge, tower, walking jib, and wall cranes.

Derrick.—A power-driven apparatus consisting of a mast or equivalent members held at the top by guys or braces, with or without a boom, for use with a hoisting mechanism or operating ropes. The term shall include all types of derricks, such as A-frame, breast, Chicago boom, gin-pole, guy, and stiff-leg derrick.

Driver.—Any individual who in the course of employment drives a motor vehicle at any time.

Elevator.—Any power-driven hoisting or lowering mechanism equipped with a car or platform which moves in guides in a substantially vertical direction. The term shall include both passenger and freight elevators (including portable elevators or tiering machines), but shall not include dumbwaiters.

Environmental Health and Safety (EHS)

Environmental Programs Manual (EPM)

Explosives and articles containing explosive components.—Includes ammunition, black powder, blasting caps, fireworks, high explosives, primers, smokeless powder, and all explosives and explosive materials as defined in 18 U.S.C.841(c)-(f) and the implementing regulations at 27 CFR Part 555. The terms included any chemical compound, mixture, or device, the primary or common purpose of which is to function by explosion, as well as all goods identified in the most recent list of explosive materials published by the Bureau of Alcohol, Tobacco, Firearms and Explosives (ATF), Department of Justice. This list may be found through the ATF Web site.

An area meeting the following criteria shall be deemed a nonexplosives area:

- None of the work performed in the area involves the handling or use of explosives
- The area is separated from the explosives area by a distance not less than that prescribed in the American Table of Distances for the protection of inhabited buildings

- The area is separated from the explosives area by a fence or is otherwise located so that it constitutes a definite designated area
- Satisfactory controls have been established to prevent employees under 18 years of age within the area from entering any area in or about the plant which does not meet criteria a through c.

Fair Labor Standards Act (FLSA)

Glenn Research Center (GRC)

Glenn Safety Manual (GSM)

Gross vehicle weight.—Includes the truck chassis with lubricants, water, and full tank or tanks of fuel, plus the weight of the cab or driver's compartment, body, and special chassis and body equipment, and payload.

Guillotine shear.—A machine equipped with a moveable blade operated vertically and used to shear materials. The term shall not include other types of shearing machines, using a different form of shearing action, such as alligator shears or circular shears.

Human Capital Development Branch (HCDB)

Hazardous Communication (HAZCOM)

Hazardous Occupation Orders (HOs)

Helper.—A person who assists in the operation of a machine covered by this section by helping place materials into or remove them from the machine.

High-lift truck.—A power-driven industrial type of truck used for lateral transportation that is equipped with a power-operated lifting device usually in the form of a fork or platform capable of tiering loaded pallets or skids one above the other. Instead of a fork or a platform, the lifting device may consist of a ram, scoop, shovel, crane, revolving fork, or other attachments for handling specific loads. The term shall mean and include high-lift trucks known under such names as forklifts, fork trucks, fork lift trucks, tiering trucks, backhoes, front-end loaders, skid loaders, skid-steer loaders, Bobcat loaders, or stacking trucks, but shall not mean low-lift trucks or low-lift platform trucks that are designed for the transportation of but not the tiering of materials.

Hoist.—A power-driven apparatus for raising or lowering a load by the application of a pulling force that does not include a car or platform running in guides. The term shall include all types of hoists, such as base-mounted electric, clevis suspension, hook suspension, monorail, overhead electric, simple drum, and trolley suspension hoists.

Incident Reporting Information System (IRIS)

Information Technology (IT)

Ionizing radiation.—Alpha and beta particles, electrons, protons, neutrons, gamma, and x-ray and all other radiations that produce ionizations directly or indirectly, but does not include electromagnetic radiations other than gamma and x-ray.

Manlift.—A device intended for the conveyance of persons that consists of platforms or brackets mounted on, or attached to, an endless belt, cable, chain or similar method of suspension; with such belt, cable, or chain operating in a substantially vertical direction and being supported by and driven through pulleys, sheaves or sprockets at the top and bottom. The term shall also include truck- or equipment-mounted aerial platforms commonly referred to as scissor lifts, boom-type mobile elevating work platforms, work assist vehicles, cherry pickers, basket hoists, and bucket trucks.

Material Safety Data Sheet (MSDS)

Minor.—Anyone under 18 years of age.

Motor vehicle.—Any automobile, truck, truck tractor, trailer, semitrailer, motorcycle, or similar vehicle propelled or drawn by mechanical power and designed for use as a means of transportation but shall not include any vehicle operated exclusively on rails.

NASA Policy Directive (NPD)

NASA Procedural Requirements (NPR)

Occasional and Incidental.—No more than one-third of the 17-year-old driver's work time in any workday and no more than 20 percent of the 17-year-old driver's work time in any workweek.

Occupational Programs Manual (OHPM)

Occupational Safety and Health Administration (OSHA)

Off-bearing.—The removal of material or refuse directly from a saw table or from the point of operation. Operations not considered as off-bearing within the intent of this section include:

> The removal of material or refuse from a circular saw or guillotine-action veneer clipper where the material or refuse has been conveyed away from the saw table or point of operation by a gravity chute or by some mechanical means such as a moving belt or expulsion roller; and
>
> The following operations when they do not involve the removal of materials or refuse directly from a saw table or point of operation: The carrying, moving, or transporting of materials from one machine to another or from one part of a plant to another; the piling, stacking, or arranging of materials for feeding into a machine by another person; and the sorting, tying, bundling, or loading of materials.

On or about a roof.—Includes all work performed upon or in close proximity to a roof, including carpentry and metal work, alterations, additions, maintenance and repair, including painting and coating of existing roofs; the construction of the sheathing or base of roofs (wood or metal), including roof trusses or joists; gutter and downspout work; the installation and servicing of television and communication equipment such as cable and satellite dishes; the installation and servicing of heating, ventilation and air conditioning equipment or similar appliances attached to roofs; and any similar work that is required to be performed on or about roofs.

Operating or assisting to operate.—All work that involves starting or stopping a machine covered by this section, placing materials into or removing materials from a machine, including clearing a machine of jammed materials, paper, or cardboard, or any other work directly involved in operating the machine. The term does not include the stacking of materials by an employee in an area nearby or adjacent to the machine where such employee does not place the materials into the machine.

Operator.—A person who operates a machine covered by this section by performing such functions as starting or stopping the machine, placing materials into or removing them from the machine, or any other functions directly involved in operation of the machine.

Outside helper.—Any individual, other than a driver, whose work includes riding on a motor vehicle outside the cab for the purpose of assisting in transporting or delivering goods.

Paper box compactor.—A powered machine that remains stationary during operation, used to compact refuse, including paper boxes, into a detachable or integral container or into a transfer vehicle.

Paper products machine.—All power-driven machines used in (1) remanufacturing or converting paper or pulp into a finished product, including preparing such materials for recycling; or (2) preparing such materials for disposal. The term applies to such machines whether they are used in establishments that manufacture converted paper or pulp products, or in any other type of manufacturing or nonmanufacturing establishment. The term also applies to those machines which, in addition to paper products, process other material for disposal.

Personal Protective Equipment (PPE)

Plant or Establishment Manufacturing or Storing Explosives or Articles Containing Explosive Components.—The land with all the buildings and other structures thereon used in connection with the manufacturing or processing or storing of explosives or articles containing explosive components.

Power-driven woodworking machines.—**A**ll fixed or portable machines or tools driven by power and used or designed for cutting, shaping, forming, surfacing, nailing, stapling, wire stitching, fastening or otherwise assembling, pressing or printing wood, veneer, trees, logs, or lumber.

Reciprocating saw.—A machine equipped with a moving blade that alternately changes direction on a linear cutting axis used for sawing materials.

Risk.—The probability of a hazard or condition that increases the likelihood of injury, illness, fatality or loss of work time.

Roofing operations.—All work performed in connection with the installation of roofs, including related metal work such as flashing and applying weatherproofing materials and substances (such as waterproof membranes, tar, slag or pitch, asphalt prepared paper, tile, composite roofing materials, slate, metal, translucent materials, and shingles of asbestos, asphalt, wood, or other materials) to roofs of buildings or other structures. The term also includes all jobs on the ground related to roofing operations such as roofing laborer, roofing helper, materials handler, and tending a tar heater.

Safe.—Free of hazards and conditions that lead to injury, illness, fatality, and loss of work time.

Safety and Health Division (SHeD)

System for Administration, Training, and Educational Resources for NASA (SATERN) Scrap paper baler.—**A** powered machine used to compress paper and possibly other solid waste, with or without binding, to a density or form that will support handling and transportation as a material unit without requiring a disposable or reusable container.

Self-luminous compound.—Any mixture of phosphorescent material and radium, mesothorium, or other radioactive element.

Wage and hourly (WH)

Wood chipper.—A machine equipped with a feed mechanism, knives mounted on a rotating chipper disc or drum, and a power plant used to reduce to chips or shred such materials as tree branches, trunk segments, landscape waste, and other materials.

Workroom.—The entire area bounded by walls of solid material and extending from floor to ceiling.

Wrecking, demolition, and ship-breaking operations.—All work, including cleanup and salvage work, performed at the site of the total or partial razing, demolishing, or dismantling of a building, bridge, steeple, tower, chimney, or other structure, ship or other vessel.

APPENDIX B.—HAZARDOUS OCCUPATIONS ORDERS (HOS) FOR NONAGRICULTURAL EMPLOYMENT

HO 1 - Manufacturing or Storage Occupations Involving Explosives

The following occupations in or about plants or establishments manufacturing or storing explosives or articles containing explosive components are prohibited:

1. All occupations in or about any plant or establishment (other than retail establishments or plants or establishments of the type described in subparagraph 2. below) manufacturing or storing explosives or articles containing explosive components *except* where the occupation is performed in a "non-explosives area" as defined in subparagraph 3 below.
2. The following occupations in or about any plant or establishment manufacturing or storing small arms ammunition not exceeding 0.60 caliber in size, shotgun shells, or blasting caps when manufactured or stored in conjunction with the manufacture of small arms ammunition:
    a. All occupations involved in the manufacturing, mixing, transporting, or handling of explosive compounds in the manufacture of small arms ammunition and all other occupations requiring the performance of any duties in the explosives area in which explosive compounds are manufactured or mixed.
    b. All occupations involving the manufacturing, transporting, or handling of primers and all other occupations requires the performance of any duties in the same building in which primers are manufactured.
    c. All occupations involved in the priming of cartridges and all other occupations requiring the performance of any duties in the same workroom in which rim fire cartridges are primed.
    d. All occupations involved in the plate loading of cartridges and in the operation of automatic loading machines.
    e. All occupations involved in the loading, inspecting, packing, shipping, and storage of blasting caps.

HO 5 - Power-Driven Woodworking Machine Occupations

The following occupations involved in the operation of power-driven woodworking machines are prohibited:

1. The occupation of operating power-driven woodworking machines including supervising or controlling the operation of such machines, feeding material into such machines, and helping the operator to feed material into such machines, but not including the placing of material on a moving chain or in a hopper or slide for automatic feeding.
2. The occupations of setting up, adjusting, repairing, oiling, or cleaning power-driven woodworking machines.
3. The operations of off-bearing from circular saws and from guillotine-action veneer clippers.

Exemption

The exemption for student-learners and apprentices applies to HO 5.

HO 6 - Occupations Involving Exposure to Radioactive Substances and to Ionizing Radiation

The following occupations are prohibited:

1. Any work in any workroom in which:
    a. radium is stored or used in the manufacture of self-luminous compound;
    b. self-luminous compound is made, processed, or packaged;
    c. self-luminous compound is stored, used, or worked upon;
    d. incandescent mantles are made from fabric and solutions containing thorium salts, or are processed or packaged;

e. other radioactive substances are present in the air in average concentrations exceeding 10 percent of the maximum permissible concentrations in the air recommended for occupations exposure by the National Committee on Radiation Protection, as set forth in the 40-hour week column of Table One of the National Bureau of Standards Handbook No. 69 entitled *Maximum Permissible Body Burdens and Maximum Permissible Concentrations of Radionuclides in Air and In Water for Occupational Exposure* issued June 5, 1959.

2. Any other work which involves exposure to ionizing radiations in excess of 0.5 rem per year.

HO 7 - Power-Driven Hoisting Apparatus Occupations

The following occupations involved in the operation of power-driven hoisting apparatus are particularly hazardous for minors between 16 and 18 years of age:

1. Work of operating, tending, riding upon, working from, repairing, servicing, or disassembling an elevator, crane, derrick, hoist, or high-lift truck, except operating or riding inside an unattended automatic operation passenger elevator. Tending such equipment includes assisting in the hoisting tasks being performed by the equipment.
2. Work of operating, tending, riding upon, working from, repairing, servicing, or disassembling a manlift or freight elevator, except 16- and 17-year-olds may ride upon a freight elevator operated by an assigned operator. Tending such equipment includes assisting in the hoisting tasks being performed by the equipment.

Exemption

HO 7 does not prohibit the operation of an automatic elevator and an automatic signal operation elevator provided that the exposed portion of the car interior (exclusive of vents and other necessary small openings), the car door, and the hoistway doors are constructed of solid surfaces without any opening through which a part of the body may extend; all hoistway openings at floor level have doors which are interlocked with the car door so as to prevent the car from starting until all such doors are closed and locked; the elevator (other than hydraulic elevators) is equipped with a device which will stop and hold the car in case of over speed or if the cable slackens or breaks; and the elevator is equipped with upper and lower travel limit devices which will normally bring the car to rest at either terminal and a final limit switch which will prevent the movement in either direction and will open in case of excessive over travel by the car. [2]

HO 8 - Power-Driven Metal Forming, Punching, and Shearing Machine Occupations

The following occupations are prohibited:

1. The occupations of operator of or helper on the following power-driven metal forming, punching, and shearing machines:
   a. All rolling machines, such as beading, straightening, corrugating, flanging, or bending rolls; and hot or cold rolling mills.
   b. All pressing or punching machines, such as punch presses *except* those provided with full automatic feed and ejection and with a fixed barrier guard to prevent the hands or fingers of the operator from entering the areas between the dies; power presses; and plate punches.
   c. All bending machines, such as apron brakes and press brakes.
   d. All shearing machines, such as guillotine or squaring shears; alligator shears; and rotary shears.
   e. All hammering machines, such as apron brakes and press brakes.
   f. The occupations of setting-up, adjusting, repairing, oiling, or cleaning these machines including those with automatic feed and ejection.

Exemption

The exemption for student-learners and apprentices applies to HO 8.

HO 12 - Occupations involved in the operation of balers, compactors, and paper-products machines

The following occupations are prohibited in any type of establishment (manufacturing, nonmanufacturing, retail, wholesale, service, etc.):

1. The occupations of operating or assisting to operate any of the following power-driven paper-products machines:
   a. Arm-type wire stitcher or stapler, circular or band saw, corner cutter or mitering machine, corrugating and single- or double-facing machine, envelope die-cutting press, guillotine paper cutter or shear, horizontal bar scorer, laminating or combining machine, sheeting machine, or vertical slotter.
   b. Scrap paper balers and paper box compactors, including those machines that process other materials in addition to paper.
   c. Platen die-cutting press, platen printing press, or punch press which involves hand feeding of the machine.
2. The occupations of operating or assisting to operate any baler that is designed or used to process materials other than paper.
3. The occupations of operation or assisting to operate any compactor that is designed or used to process materials other than paper.
4. The occupations of setting up, adjusting, repairing, oiling, or cleaning any of the machines listed in paragraphs (a)(1), (2), and (3) of this section.

Exemptions

1. The exemption for student-learners and apprentices applies to HO 12.
2. Section 13(c)(5) of the FLSA permits 16- and 17-year-old employees to load, but not operate or unload, certain scrap paper balers and paper box compactors if all of the following conditions are met:
   a. the scrap paper balers and the paper box compactors must meet an applicable American National Standard Institute (ANSI) Standard as discussed in the following chart:[5]

In order for employers to take advantage of the limited exception discussed in this section, the *scrap paper baler* must meet one of the following ANSI Standards:	In order for employers to take advantage of the limited exception discussed in this section, the *paper box compactor* must meet one of the following ANSI Standards:
ANSI Standard Z245.5-1990	ANSI Standard Z245.2-1992
ANSI Standard Z245.5-1997	ANSI Standard Z245.2-1997
ANSI Standard Z245.5-2004	ANSI Standard Z245.2-2004
ANSI Standard Z245.5-2008	ANSI Standard Z245.2-2008

   b. the scrap paper balers and paper box compactors cannot be operated while being loaded;
   c. the scrap paper balers and paper box compactors include an on-off switch incorporating a key-lock or other system and the control of the system is maintained in the custody of employees who are 18 years of age or older;
   d. the on-off switch of the scrap paper balers and paper box compactors is maintained in an off position when the equipment is not in operation; and
   e. the employer posts a notice on each scrap paper baler and each paper box compactor that 16- and 17-year-olds will be loading which states (*see* §:570.63(c)):

- the equipment meets an appropriate ANSI Standard mentioned above, or a more recent applicable ANSI Standard that the Secretary of Labor has certified as being as protective of minors as those listed above – *Note: the specific standard must be listed on the notice in its entirety*;
- Sixteen- and 17-year-old employees may only load the scrap paper baler and paper box compactor; and
- Any employee under the age of 18 may not operate or unload the scrap paper baler and paper box compactor.[6]

HO 13 - Occupations Involved in the Manufacture of Brick, Tile, and Kindred Products

The following occupations involved in the manufacture of clay construction products and of silica refractory products are prohibited:

1. All work in or about establishments in which clay construction products are manufactured, except
   a. work in storage and shipping;
   b. work in offices, laboratories, and storerooms; and
   c. work in the drying departments of plants manufacturing sewer pipe.
2. All work in or about establishments in which silica brick or other silica refractories are manufactured except work in offices.
3. Nothing in this section shall be construed as permitting employment of minors in any occupations prohibited by any other HO issued by the Secretary of Labor.

HO 14 - Occupations Involving the Operation of Circular Saws, Band Saws, Guillotine Shears, Chain Saws, Reciprocating Saws, Wood Chippers, and Abrasive Cutting Discs

The following occupations are prohibited in any type of establishment (manufacturing, non-manufacturing, retail, wholesale, and service, etc.):

1. The occupations of operator of or helper on the following power-driven fixed or portable machines *except* for machines equipped with full automatic feed and ejection: circular saws, band saws, and guillotine shears.
2. The occupations of operator of or helper on the following power-driven fixed or portable machines: chain saws, reciprocating saws, wood chippers, and abrasive cutting discs.
3. The occupations of setting-up, adjusting, repairing, oiling, or cleaning circular saws, band saws, guillotine shears, chain saws, reciprocating saws, wood chippers, and abrasive cutting discs.

Exemption

The exemption for student-learners and apprentices applies to HO 14.

HO 15 - Occupations Involved in Wrecking, Demolition, and Ship Breaking Operations

All occupations in wrecking, demolition, and ship breaking operations are prohibited.

HO 16 - Occupations in Roofing Operations and All Work on or About a Roof

All occupations in roofing operations and all work on or about a roof are prohibited.

Exemption

The exemption for student-learners and apprentices applies to HO 16.

HO 17 - Occupations in Excavation Operations

The following occupations in excavation operations are prohibited:

1. Excavating, working in, or backfilling (refilling) trenches, *except*
   a. manually excavating or manually backfilling trenches that do not exceed four feet in depth at any point, or

b. working in trenches that do not exceed four feet in depth at any point.

2. Excavating for buildings or other structures or working in such excavations, *except*

   a. manually excavating to a depth not exceeding four feet below any ground surface adjoining the excavation, or

   b. working in an excavation not exceeding such depth, or

   c. working in an excavation where the side walls are shored or sloped to the angle of repose.

3. Working within tunnels prior to the completion of all driving and shoring operations.

4. Working within shafts prior to the completion of all sinking and shoring operations.

Exemption

The exemption for student-learners and apprentices applies to HO 17.

Special Provisions Permitting the Employment of Certain Minors in Places of Business that Use Machinery to Process Wood Products

Section 13(c)(7) of the Fair Labor Standard Acts (FLSA) permits the employment of certain minors between the ages of 14 and 18, inside and outside of places of businesses where machinery is used to process wood products.

This exemption applies only to a minor who is:

a. exempt from compulsory school attendance beyond the eighth grade either by statute or judicial order, <u>and</u>,

b. supervised in the work place by an adult relative or adult member of the same religious sect or division as the minor.

Although a minor meeting these requirements maybe employed inside and outside of places of businesses that use machinery to process wood products—activities normally prohibited by Child Labor Regulation No. 3 and HO 4—the minor is still prohibited from operating, or assisting to operate, any power-driven woodworking machines. This prohibition includes the starting and stopping of the machines and the feeding of materials into the machines as well as the off-bearing of materials from the machines.

Such minors are also prohibited from cleaning, oiling, setting-up, adjusting and maintaining the machines. Minors 14 and 15 years of age must be employed in compliance with the remaining occupations and hours standards of CL Regulation No. 3. In addition, such minors must be protected from wood particles or other flying debris within the workplace by a barrier appropriate to the potential hazard of such wood particles or flying debris or by maintaining a sufficient distance from machinery in operation. The minors are also required to use personal protective equipment to prevent exposure to excessive levels of noise and sawdust.

APPENDIX C.—VERIFICATION ELEMENT SUMMARY

6.1 – Verification – Human Capital Development Branch SATERN records review
6.2 – Verification – Checklists, See Appendix D
6.2 – Verification – PPE C-Form 237

APPENDIX D.—SAFETY AND HEALTH DIVISION (SHeD) STUDENT CHECKLISTS FOR GRC

The checklist is intended to serve as a reminder to mentors that students (i.e., graduate students, summer students) need instructions in order to safely carry out their work in the laboratory. Mentors that have new students/returning students shall go through this checklist with the student upon arrival.

Basic Safety

The student knows that speed limit at Lewis Field is 25 MPH (Plum Brook speed limit is 35 MPH unless otherwise marked) and slow to 5 MPH (Plum Brook 10 MPH) when approaching the main gate. Yes___ No___

Student has been instructed the exit route must be accessible, with no storage of materials in aisles, corners or passageways. Yes___ No___

If student spots a fire and has not had fire extinguisher training, student is requested to move to the nearest safe area and call 911 from a NASA phone or 216 433-8888 (emergency telephone number at Plum Brook is 419.621.3222) from a cell phone. Yes___ No___

Student has been instructed to report any hazards or unsafe conditions to their Mentor. Yes___ No___

Student is aware cell phone use while driving is not allowed on center. Yes___ No___

Student has been instructed where to go in the event of a building evacuation and to check in with their mentor. Yes___ No___

Students are aware that if the injury is life threatening or very severe they should call 911 from a NASA telephone or 433-8888 (Plum Brook emergency number 419-621-3222) from a cell phone; otherwise they should come to the clinic for evaluation. Yes___ No___

Student has been instructed to make it their responsibility to perform their duties in a safe manner. Yes___ No___

Students are aware of not parking next to curb that are painted “red” or in spaces marked government vehicle or handicap only. Yes___ No___

Student shall not cross barricades nor enter construction work areas. Yes___ No___

Students shall not enter hazardous areas without NASA escort. Yes___ No___

Students have filled out the C237 PPE Hazard Assessment Survey and Analysis form. Yes___ No___

Students has been instructed they shall not text and drive. Yes___ No___

Students have been given all emergency numbers at Glenn Research Center and Plum Brook. Yes___ No___

Student has been instructed, while driving to stop for pedestrians at all crosswalks. Yes___ No___

Comments: _____

_____

Student Name: _____Date: _____

Student Signature:_____

Mentor Name:_____ Room: ____ Phone#_____ M/S___

Reviewed By: _____

Safety and Health Division (SHeD)
Student Checklist for the Laboratory

The checklist is intended to serve as a reminder to mentors that students (i.e., graduate students, summer students) need instructions in order to safely carry out their work in the laboratory. Mentors that have new students/returning students are asked to go through this checklist with the student upon arrival in the laboratory.

Basic Laboratory Safety

The student has been instructed on the appropriate measures to take in case of chemical spill. Yes___ No___

Students are aware that if the injury is life threatening or very severe they should call 911 from a NASA telephone or 433-8888 (Plum Brook emergency telephone number 419-621-3222) from a cell phone; otherwise they should come to the clinic for evaluation Yes___ No___

The mentor has also provided their emergency contact numbers and designated an alternate contact where applicable. Yes___ No___

The student has been provided and instructed on how to wear the necessary PPE suitable footwear with closed toes (NO SANDALS, NO HEELS, NO CANVAS), long hair tied back, and anything that hangs is avoided. Yes___ No___

The student has been instructed not to eat, chew gum, drink, store food in the lab or place food in "Chemical Only" refrigerators. Yes___ No___

The student has been instructed to not to work alone. Yes___ No___

The student has been instructed in the proper way to remove of PPE (laboratory coat, gloves, safety glasses, hearing protection, etc. Yes___ No___

The student has been instructed not to wear laboratory coats and gloves outside designated laboratory areas. Yes___ No___

The student has been instructed on how to transport chemicals safely within the laboratory and building. Yes___ No___

The student has attended HAZCOM or Lab Standard Training. Yes___ No___

The student has been instructed on how to locate MSDSs-on-line and in the MSDS database (contact 3-8824 or 4-3294 (Plum Brook) for help). Yes___ No___

Students has been instructed they shall not text and drive. Yes___ No___

Students have been given all emergency numbers at Glenn Research Center and Plum Brook. Yes___ No___

Student has been instructed, while driving to stop for pedestrians at all crosswalks. Yes___ No___

Student is aware cell phone use while driving is not allowed on center. Yes___ No___

Student has been instructed where to go in the event of a building evacuation and to check in with their mentor. Yes___ No___

The student knows that speed limit at Lewis Field is 25 MPH (Plum Brook speed limit is 35 MPH unless otherwise marked) and slow to 5 MPH (Plum Brook 10 MPH) when approaching the main gate. Yes___ No___

Student has been instructed to make it their responsibility to perform their duties in a safe manner. Yes___ No___

Students are aware of not parking next to curb that are painted "red" or in spaces marked government vehicle or handicap only. Yes___ No___

Student has been instructed not cross barricades nor enters construction work areas. Yes___ No___

Students has been instructed not enter hazardous areas without NASA escort. Yes___ No___

Comments: _____

_____

_____

Student Name: _____Date: _____

Student Signature:_____

Mentor Name:_____ Room: ____ Phone#_____ M/S___

Reviewed By: _____

Contents

1.0 PURPOSE 3
2.0 APPLICABILITY 3
3.0 BACKGROUND 3
3.1 Operational Hazards of Oxygen 3
3.1.1 Fire and Explosion 3
3.1.2 Cryogenic and Mixing Hazards 3
3.2 Managing the Oxygen Hazard 4
3.3 Properties of Oxygen 4
3.3.1 Solubility 4
3.3.2 Reactivity 4
4.0 POLICY 4
5.0 RESPONSIBILITIES 5
5.1 Owner/Operators of Oxygen Systems 5
5.2 Supervisors of Operating Personnel and System Designers 5
5.3 Owner/Operators of Pressurized Oxygen Systems 5
5.4 Glenn Research Center (GRC) Safety and Health Division (SHeD) 5
5.5 Area Safety Committees 6
6.0 REQUIREMENTS 6
6.1 Training (*ASTM MNL36, Chapter 1*) 6
6.1.1 Recommended Training 6
6.1.2 Operator Certification 6
6.2 Operational and Protective Measures (*ASTM MNL36, Chapter 6*) 7
6.2.1 Buddy System 7
6.2.2 Protective Equipment 7
6.2.3 Smoking Regulations 8
6.3 Emergency Procedures (*ASTM MNL36, Chapter 9*) 8
6.3.1 Emergency Action 8
6.3.2 Spills and Leaks 8
6.3.3 Rescue 8
6.3.4 Firefighting/Fire Control 8
6.3.5 Transportation Emergencies 9
6.3.6 Decontamination of Liquid Oxygen and Fuel Mixtures 9
6.3.7 First Aid 9
6.4 Oxygen Storage and Use Locations (*ASTM MNL36, Chapter 7, NSS 1740.12*) 9
6.4.1 Quantity Distance 10
6.4.2 Quantity-Distance Guidelines for Storing Bulk Liquid Oxygen Without Fuels 10
6.4.3 Liquid Oxygen in Static Test Stands and Incompatible Storage 10
6.4.4 Quantity-Distance Guidelines for Gaseous Oxygen Storage 11
6.4.5 Site Considerations 11
6.4.6 Electrical Wiring and Equipment 12
6.5 Materials (*ASTM MNL36, Chapter 3, ASTM G 63, ASTM G 94*) 12
6.5.1 Factors Affecting Selection 12
6.5.2 General Guidelines for Materials Selection 13
6.5.3 Metals for Low-Pressure Oxygen Service 13
6.5.4 Prohibited Metals 14
6.5.5 Nonmetallic Materials 14
6.5.6 Materials for High-Pressure Oxygen Service 15
6.5.7 Selecting Material by Configuration Testing 15
6.5.8 Materials Tests 15
6.6 System Design (*ASTM MNL36, Chapter 4, ASTM G88–90*) 15
6.6.1 General System Considerations 16
6.6.2 Velocity and Thermal Considerations 17
6.7 System Cleanliness (*ASTM MNL36, Chapter 5, ASTM G93–88, CGA G–4.1*) 17
6.7.1 General Policy 18

6.7.2 Oxygen Cleanliness Supplements 18
6.7.3 Cleaning Procedures 18
6.7.4 Verification of Oxygen System Cleanliness 19
6.7.5 Recommendations for Reinspection 19
6.8 Operating Procedures and Policies for Oxygen Systems (*ASTM MNL36, Chapter 6*) 20
6.8.1 Formal Procedures 21
6.8.2 Test Cell Entry 21
6.8.3 Transfer and Flow Guidelines 21
6.8.4 Oxygen System Maintenance or Repair 21
6.8.5 Operational Procedures for Gaseous Oxygen Tube Trailers and Cylinders 22
6.8.6 Operational Procedures for Liquid Oxygen Systems 22
6.8.7 Transportation of Oxygen 23
6.8.8 Disposal of Oxygen 23
6.9 Specifications 23
7.0 RECORDS 23
7.1 Office of Protective Services (PSO) Certification Documents (all maintained by the PSO) 23
7.2 NASA C Forms (all maintained by the PSO) 23
8.0 REFERENCES 24
APPENDIX A.—DEFINITIONS AND ACRONYMS 28
APPENDIX B.—TABLES 31
APPENDIX C.—FIRST AID FOR CONTACT WITH CRYOGENIC MATERIAL 33
C.1 Exposure to Cryogenic Gases/Liquids 33
C.2 First Aid for Cryogen-Induced Injuries 33
APPENDIX D.—CLEANLINESS SPECIFICATION FOR GASEOUS/LIQUID OXYGEN SERVICE IN GLENN TEST FACILITY SYSTEMS 34
D.1 Scope of Specifications 34
D.2 Requirements 34
D.2.1 Materials 34
D.2.2 Lubricants 34
D.2.3 Cleanliness 34
D.2.4 Visual Inspection 34
D.2.5 White Cloth Inspection 34
D.2.6 Solvent Rinse 34
D.2.7 Assembly 35
D.2.8 Cleaning 35
D.2.9 Inspection 35
D.2.10 Packaging 35
D.2.11 Verification 35
D.3 Pressure Gauges and Transducers 36
APPENDIX E.—PROCEDURES FOR GASEOUS OXYGEN TUBE TRAILERS 37
E.1 Operational Requirements 37
E.1.1 NOTE 37
E.1.2 CAUTION 37
E.1.3 Tube Trailer Fill 37
E.1.4 Post-Fill Shutdown 37
E.1.5 Tube Trailer Withdrawal 38
E.1.6 Post-Withdrawal Shutdown 38

List of Tables

Table B.1.—SELECTED SAFETY-RELEVANT PHYSICAL PROPERTIES OF GASEOUS AND LIQUID OXYGEN 31
Table B.2.—SEPARATION DISTANCES FOR BULK LIQUID OXYGEN STORAGE 31
Table B.3.—SOME RECOMMENDED MATERIALS FOR OXYGEN SERVICE[a] 32
TABLE D.1.—GRC ACCEPTANCE CRITERIA BASED ON KSC–C–123 (LEVEL 300–A) 36
TABLE D.2.—OXYGEN-CLEANING SPECIFICATIONS FOR PRESSURE GAUGES AND TRANSDUCERS 36

Chapter 5—Oxygen

NOTE: *The current version of this chapter is maintained and approved by the Safety and Health Division (SHeD). The last revision date of this chapter was December 2012. The current version is located on the Glenn Research Center (GRC) intranet at http://smad-ext.grc.nasa.gov/shed/pub/gsm/chapter_index.shtml. Approved by Chief of Safety and Health Division.*

1.0 PURPOSE

This chapter serves as a guideline, and reference to more detailed information, for the safe design, fabrication, and use of systems for gaseous and liquid oxygen at the Glenn Research Center (GRC). A summary of operational hazards, design considerations, material options, system siting requirements, and oxygen safety and emergency procedures are provided. First aid procedures for contact with cryogenic material, cleanliness specifications for gaseous and liquid oxygen systems, and procedures for filling gaseous oxygen tube trailers are provided. Important references to other oxygen system design and operational guides are given. In most cases, these guides must be used in conjunction with this manual as they provide significantly more detail.

2.0 APPLICABILITY

This chapter is applicable to all civil servant and contractor employees assigned to GRC who purchase, design, operate, maintain, or certify any fixed or portable oxygen system or container. These guidelines shall govern all aspects of oxygen handling and usage at Lewis Field and Plum Brook Station (PBS).

3.0 BACKGROUND

3.1 Operational Hazards of Oxygen

The major hazards associated with use of liquid or gaseous oxygen are fire and explosion. Oxygen-supported combustion of most engineering materials is a potential hazard. Materials considered fireproof in air will burn violently in a pure or enriched oxygen environment. The hazard is not always apparent as oxygen systems can give normal service for extended periods before circumstances combine to yield an incident or fire. One of oxygen's greatest hazards is its non-evident passive mixing with hydrocarbons. Once such a mixture is ignited, the reaction may proceed violently, even explosively.

The use of cryogenic oxygen can cause additional design and exposure problems, such as trapped cryogenic fluids developing explosive high-pressure rupture potentials, oxygen saturated clothing, cryogenic flesh burns, impact ignitions, and numerous other concerns that are detailed within this chapter.

3.1.1 Fire and Explosion

Oxygen supports vigorous or even explosive burning. Materials that burn only sluggishly or not at all in air burn quickly in oxygen. Almost any material will burn. For example, stainless steel, Teflon (DuPont), and silicones, which are generally regarded as fireproof or fire resistant, can burn easily in oxygen under the right conditions.

Some materials that can react violently with oxygen are oil, grease, asphalt, kerosene, cloth, wood, paint, tar, and dirt. Even many metals burn vigorously in gaseous oxygen. Violent fires in high-pressure oxygen systems have resulted from component failures, entrained metal particles in the flowing gas system, and rapid metal-to-metal contact within components.

Materials will ignite at considerably lower temperatures in oxygen environments than in air, and combustion rates are greater in oxygen than in air. Ignition occurs when a combustible material is heated to ignition temperature. The temperature rise could be from within the oxygen system, without any added energy from outside sources. Fluid friction, chemical reactions, adiabatic compression, or impact on container walls can produce sufficient energy for ignition to occur in oxygen systems.

Leaking or spilled liquid oxygen can form potentially dangerous high concentrations of oxygen gas. In an oxygen-rich environment, clothing may become saturated with oxygen, ignite readily, and burn violently.

3.1.2 Cryogenic and Mixing Hazards

The very low temperature of liquid oxygen aids in condensing foreign matter and freezing out many impurities that may react with oxygen at a later time. Oxygen is easily contaminated because many gases and liquids are soluble in

it and some are completely miscible. If an odorless and colorless gas is dissolved in oxygen, problems can result. In fact, inadvertent mixing of oxygen and a flammable gas can cause an explosion, and allowing argon or nitrogen to mix with and enter oxygen-breathing systems can cause death.

Other health hazards are associated with the very low temperature of liquid oxygen. Frostbite results when such liquid or a non-insulated pipe containing it contacts the skin.

Breathing pure oxygen for limited periods of time (an hour or two) will not have any toxic effects; however, the upper respiratory tract may become irritated if the gas is very dry.

When liquid oxygen is trapped in a closed system and refrigeration is not maintained, pressure rupture may occur. Oxygen cannot be kept liquid if its temperature rises above the critical temperature of –181.4 °F (154.6 K).

3.2 Managing the Oxygen Hazard

The oxygen hazard can be managed by minimizing the severity of the environment (i.e., the system's operating parameters and practices) and using materials and designs best able to withstand the environment. Generally, using as many as possible of the following steps minimizes the overall probability of a significant incident (American Society of Testing Materials (ASTM) committee G4.05)

1. Cleaning scrupulously and maintaining cleanliness
2. Adopting certain practices, such as opening valves slowly and using valves with flow capacity to limit downstream pressurization rates
3. Using automated hardware (or isolating or shielding the hardware) to reduce personnel exposure
4. Minimizing flow velocities
5. Using fire-resistant materials to improve the system's ability to withstand its environment

3.3 Properties of Oxygen

Oxygen is an element that at atmospheric temperatures and pressures exists as a colorless, odorless, and tasteless gas. High-purity liquid oxygen is a light blue, transparent liquid. It is an extremely cold cryogenic fluid, which makes handling it potentially hazardous. It boils at –297 °F (90 K) at atmospheric pressure. It boils vigorously at ambient conditions. See Appendix B, Table **B.1** for more information on the physical properties of oxygen.

3.3.1 Solubility

Most common solvents are solid at liquid oxygen temperatures. Liquid oxygen is completely miscible with liquid nitrogen and liquid methane. Light hydrocarbons are usually soluble in liquid oxygen and such mixtures are very hazardous.

3.3.2 Reactivity

In either gaseous or liquid form, oxygen is a strong oxidizer that vigorously supports combustion. A material's rate of reaction with oxygen depends on the conditions of its exposure to oxygen and its physical and chemical properties. A particular material may react with oxygen at a rate ranging from very slow to explosive or detonable. The ignition temperature of a material in oxygen systems is not an absolute property. It depends on many factors. To date, no single test has been developed that can be applied to all materials to produce absolute ignition temperature values. However, relative ranking and estimated ignition temperatures for many materials have been established through experimentation. Representative values are found in Chapter 3.4 of “Oxygen Systems Engineering Review” (Schmidt and Forney, 1975).

4.0 POLICY

The authority for the oxygen system safety program at GRC comes from the following:

- NASA Procedural Requirement (NPR) 8715.3: NASA General Safety Program Requirements
- NASA Policy Directive (NPD) 8710.5: NASA Safety Policy for Pressure Vessels & Pressurized Systems
- NASA STD 8719.17: NASA Requirements for Ground Based Pressure Vessels and Pressurized Systems (PV/S)

- Glenn Safety Manual, chapter 1: Safety and Health Management System
- 29 CFR, 1910.104: Oxygen

The primary consideration for resolving oxygen hazards shall be to eliminate them by proper design (see NPR–8715.3, NASA General Safety Program Requirements). Liquid and gaseous oxygen shall be stored, handled, and used so that life and health are not jeopardized and the risk of property damage is minimized. Hazards that cannot be eliminated by design shall be controlled by taking the following corrective actions in this order of precedence:

1. Designing for minimum hazard and allowing for verification of cleanliness to the required level
2. Installing safety devices
3. Installing alarms and warning devices; developing administrative controls, including special procedures and training
4. Providing protective clothing and equipment

Oxygen system design shall be accomplished or reviewed by experienced oxygen system engineers. The references listed in Section **8.0** are highly recommended for use by designers. Adherence to these, however, depends upon the nature and specific conditions of the system under design or operation. Many factors are involved in selecting design criteria and no one standard or guide can be followed in all cases.

An organization using oxygen systems can considerably increase its ability to do so safely by adopting and instituting organizational practices that have been developed and used successfully by the NASA lead developers of ASTM MNL36. An organization using oxygen systems shall establish and maintain necessary policies and procedures to control all phases of an oxygen system from its concept, through design, installation, cleaning, service and decommissioning.

Requests for waivers to NASA Safety and Mission Assurance (SMA) standards related to oxygen use are to be submitted to the Safety and Health Division (SHeD) and to the appropriate GRC authority having jurisdiction (AHJ) for review and final approval.

5.0 RESPONSIBILITIES

5.1 Owner/Operators of Oxygen Systems

NASA employees and contractors responsible for the design, operation, or maintenance of oxygen systems at GRC will meet the requirements of the NASA documents located in Section **4.0**, Policy. Systems shall be designed, built, and operated utilizing the guidelines of this chapter as well as the given references as applicable or to equivalent levels of safety. Deviations or alternate designs and operation from the references shall be reviewed by experienced staff including the pressure systems office, the area safety committee, and SHeD.

5.2 Supervisors of Operating Personnel and System Designers

Supervisors shall certify that personnel directly involved with the design, installation, and operation of oxygen systems meet minimum training requirements and have knowledge appropriate to the task as recommended in Section **6.1** below. The extent of training depends upon the complexity of the system. For operators and designers of systems containing liquid oxygen or larger volumes of compressed oxygen gas, such as tube trailers, the training requirements of Section **6.1** apply.

5.3 Owner/Operators of Pressurized Oxygen Systems

See the Glenn Safety Manual, Chapter **7**, Pressure System Safety, for responsibilities related to pressurized systems. The pressure systems office reviews all oxygen systems for proper design as part of the certification process.

5.4 GRC Safety and Health Division (SHeD) Safety Engineer

The SHeD is responsible for assisting Center personnel with compliance and safety information, hazard analyses, and training resources for safe design and operation of oxygen systems. The SHeD process safety engineer will work with design engineers, system owner/operators, and safety committees to advise on, evaluate, and resolve oxygen system operational, compliance, and safety issues. The SHeD process safety engineer will review oxygen or pressure system waiver requests for proper content including a description of the system and the hazards, overall risk assessment, and acceptability of the proposed mitigation.

5.5 Area Safety Committee Member

The responsibilities of GRC safety committees are defined in Chapter **1** of the Glenn Safety Manual. Area safety committees will ensure that the design and operation of oxygen systems at GRC follow appropriate standards as defined in this chapter and that a sufficient review of the hazards has been completed with associated risk analysis. For process systems and test cells containing pressure systems, the safety committee will permit operation only upon the pressure systems being certified, excluded from certification requirements, or an approved variance in place. This requires that verification of certification, an exclusion, or an approved variance be included in any permit application package containing a pressure vessel or pressure system.

6.0 REQUIREMENTS

6.1 Training (*ASTM MNL36*)

Personnel who handle or use liquid and gaseous oxygen or who design equipment for oxygen systems must become familiar with its physical, chemical, and hazardous properties. Supervisors will certify that employees have sufficient training and knowledge appropriate to the task assigned. Most tasks involving the design or operation of systems involving gaseous or liquid oxygen will require training and certification as described below in Sections **6.1.1** and **6.1.2**. Supervisors will determine the suitability of the training. Work involving small quantities, such as single cylinders of gas, may not require the same level of training as that for larger systems.

Training shall familiarize personnel with the nature of the facility's major process systems. Major systems include loading and storage systems; purge gas piping systems; control, sampling, and analyzing systems; alarm and warning signal systems; ventilation systems; and fire and personnel protection systems.

6.1.1 Recommended Training

The following NASA Safety Training Center (NSTC) classes are recommended for operators of oxygen systems at GRC.

Class Number	Class Name
SMA–SAFE–NSTC–0317	Safety in High Pressure Operations
SMA–SAFE–NSTC–0318	Compressed Gas Trailer Safety
SMA–SAFE–NSTC–0319	Compressed Gas Cylinder Safety
SMA–SAFE–NSTC–0056	Flex Hose Safety
SMA–SAFE–NSTC–0052	Fire Hazards in Oxygen Systems
SMA–SAFE–NSTC 053	Oxygen Systems: Operations and Maintenance
SMA–SAFE–NSTC–0313	Cryogenics Safety

6.1.2 Operator Certification

Research personnel, technicians, and system operators shall be certified as “qualified” for handling liquid and gaseous oxygen as applicable to the task and “qualified” in the emergency procedures for handling leaks and spills. Personnel must also be kept informed of any changes in facility operations and safety procedures. Certification requirements for specific potentially hazardous operations are provided in Chapter **2** of the Glenn Safety Manual. Safety permits for operations involving work with oxygen or enriched oxygen require qualified operator certification. This consists of a list of qualified operators and a description of the training completed that must be included in the permit request.

Supervisors will certify (verify) that operators, before working with liquid or gaseous oxygen, have demonstrated the following:

1. Knowledge of the nature and properties of oxygen in both the liquid and gaseous phases
2. Knowledge of approved materials that are compatible with liquid and gaseous oxygen under operating conditions
3. Knowledge of proper equipment and proficiency in its operation

4. Familiarity with manufacturers' manuals detailing equipment operations
5. Proficiency in the use and care of protective equipment and clothing, and safety equipment
6. Proficiency in self-aid, first aid, and proper emergency actions
7. Proficiency in maintaining a clean system and clean equipment in oxygen service
8. Recognition of normal operations and of symptoms that indicate deviations from such operations
9. Conscientiousness in following instructions and checklist requirements

Also, consult the Organizational Development and Training Office—Safety, Health and Environmental Training (SHET) Matrix for operator courses for handling compressed gases and cryogenics.

6.1 Verification: The training and knowledge of system designers can be verified by reviewing design records, drawings, and calculations which have the designer and approver name and organization recorded. Supervisors can produce the designer qualifications for review.

Operator training records are available in safety permit documentation or supervisor records for review (C-580 or other).

6.2 Operational and Protective Measures (*ASTM MNL36*)

6.2.1 Buddy System

All operations involving the handling of oxygen shall be performed under the buddy system as identified in Chapter **22**, of the Glenn Safety Manual. The level of the buddy system required will vary with the hazard and complexity of the task, but it shall never be lower than level “d” which is the no-one-alone system. At least two people are required at this level (see Chapter **22** of the Glenn Safety Manual).

6.2.2 Protective Equipment

Protective clothing and equipment shall be included in personnel protective measures. (See Chapter **15** of the Glenn Safety Manual, Personal Protective Equipment, for additional information.)

6.2.2.1 Hand and Foot Protection

Gloves for work near cryogenic systems must be of good insulating quality. They should be designed for quick removal in case liquid oxygen gets inside. Cryogenic gloves do not protect against immersion in liquid oxygen. They are limited to only providing insulative protection from temperature extremes. Because of the danger of a cryogenic splash, shoes should have high tops, and pant legs should be worn outside and over the shoe tops. Leather shoes are recommended.

6.2.2.2 Head, Face, and Body Protection

Personnel handling liquid oxygen shall wear splash protection. A face shield or a hood with a face shield shall be worn. If liquid oxygen is being handled in an open system, an apron of impermeable material should be worn.

6.2.2.3 Impermeable Clothing

Oxygen will saturate clothing, rendering it extremely flammable. Clothing described as flame resistant or flame retardant in air may be flammable in an oxygen-enriched atmosphere. Impermeable clothing with good insulating properties is effective in protecting the wearer from burns due to cryogenic splashes or spills, but even these components can absorb oxygen.

6.2.2.4 Oxygen Vapors on Clothing

Any clothing that has been splashed or soaked with oxygen vapors shall be removed and shall not be used until it is completely free of the gas.

6.2.2.5 Exposure to Oxygen-Rich Atmospheres

Personnel exposed to high-oxygen atmospheres should leave the area and avoid all sources of ignition for at least 20 minutes, until the oxygen in their clothing dissipates. Removal of clothing should be considered.

6.2.2.6 Respiratory Protection

Respiratory protection is not usually required in oxygen operations.

6.2.2.7 Storage of Protective Equipment

Facilities should be available near the oxygen use or storage area for the proper storage, repair, and decontamination of protective clothing and equipment. Safety and protective equipment shall be periodically inspected to ensure it is maintained in reliable condition at all times during use.

6.2.3 Smoking Regulations

1. Smoking and open flames are prohibited within a minimum of 50 feet of an oxygen system.
2. Persons who have been in an oxygen-enriched environment shall not smoke until they have been in a safe area for at least 20 minutes. **Clothing saturated with oxygen vapor is an extreme fire hazard**.

6.3 Emergency Procedures (*ASTM MNL36,*)

6.3.1 Emergency Action

The following priority actions shall be followed in case of an accident or emergency:

1. Direct all personnel to evacuate the suspected hazardous area. Activate building evacuation alarms.
2. Call the emergency dispatcher by dialing 9-1-1 at GRC or at PBS. From a cell phone, at GRC call 216–433–8888 and from PBS call 419–621–3222.
3. Isolate or shut off all oxygen supply sources if this can be done safely.
4. Attempt to control the emergency with the installed facility system safety equipment and follow preplanned emergency procedures.

6.3.2 Spills and Leaks

A general fire hazard always exists when a major oxygen leak occurs. Nearby materials, equipment, and buildings may ignite and burn in the oxygen-enriched atmosphere; however, proper system design, material selection, operating procedures, and adequate ventilation will minimize the danger.

Note that an oxygen vapor cloud may persist for a considerable distance downwind of a large liquid oxygen spill because of lack of buoyancy of the cold gas.

6.3.3 Rescue

Only personnel trained in specific rescue techniques shall engage in rescue activities. This will generally be emergency responders such as local fire department personnel. All other personnel shall stay clear of an emergency area.

Rescue personnel must not try to pull a burning victim out of an oxygen-rich atmosphere since the rescuer risks catching fire. Instead, deluge the victim with water and move him/her to fresh air as soon as possible.

Fire blankets must not be used to cover personnel whose clothing is saturated with oxygen. A blanket will prevent oxygen from dissipating from the clothing. Blankets can also become oxygen saturated, thus becoming a fire hazard.

6.3.4 Firefighting/Fire Control

Oxygen-enriched environments make all materials more ignitable, increase burning rates, and, in general, decrease the time available for suppression. Experiments have shown that manual efforts to prevent ignition of adjacent materials once burning has started is very difficult.

Only personnel trained in specific firefighting techniques should be engaged in the firefighting. All other personnel should stay clear of the area.

6.3 Verification: Verify existence and adequacy of emergency procedures regarding oxygen systems via review of safety permit documentation and or facility procedures and training records. Facility inspections may verify proper egress routes in conjunction with system emergency procedures.

Procedures for controlling fires involving oxygen vary with the type and circumstances of the fire. The following general recommendations are to be used as a guide.

6.3.4.1 Liquid Oxygen and Fuel

When the fire involves liquid oxygen and liquid fuels, control it as follows:

1. If fuel and liquid oxygen are mixed but not burning, quickly evacuate personnel, isolate the area from sources of ignition, and allow the oxygen to evaporate. Mixtures of fuel and liquid oxygen present an extreme explosion hazard.
2. Should a fuel-liquid oxygen fire occur, shut off fuel and oxygen supplies. Only water sprays or fog should be used to cool the fire. Foams should not be applied. The foam will retard oxygen evaporation and will not extinguish the fire.

6.3.5 Transportation Emergencies

Hazards caused by damage to oxygen transportation systems (road, rail, air, and water) include spills and leaks. Such spills may result in fires and explosions.

The first concern should be to prevent injury or death. In an accident or emergency, efforts should be made to move the oxygen transportation system to an open, safe location provided there is minimum risk of injury to personnel in doing so. All possible ignition sources should be removed and access restricted. If there has been major damage to the vacuum shell or vent system, pressure may build up, causing the liquid oxygen container to rupture explosively. Use water to extinguish secondary fires.

6.3.6 Decontamination of Liquid Oxygen and Fuel Mixtures

Oxygen will eventually evaporate from contaminated surfaces, given time and adequate ventilation.

When liquid oxygen has been contaminated by fuel, isolate the area from sources of ignition and quickly evacuate personnel. Allow the oxygen to evaporate and the residual fuel to reach ambient temperatures. Purge the oxygen system with gaseous nitrogen prior to any other cleanup step.

6.3.7 First Aid

Contact with liquid oxygen or its cold boil-off vapors can produce cryogenic burns (frostbite). Unprotected parts of the body should not be allowed to contact non-insulated pipes or vessels containing cryogenic fluids. The cold metal will cause the flesh to stick and tear.

Treatment of truly frozen tissue requires professional medical supervision since incorrect first aid practices almost always aggravate the injury. For reference, recommended emergency treatments for a cryogenic burn are outlined in Appendix C; they shall be posted in oxygen handling areas.

6.4 Oxygen Storage and Use Locations (*ASTM MNL36, NASA STD 8719.12*)

Suitable protection shall be provided between oxygen storage containers and incompatible materials, storage tanks, plant equipment, buildings, test areas, and property lines so that any accident or malfunction has a minimum effect on facility personnel and public safety. This protection may include separation by distance and by protective structures such as barricades or cell enclosures. The amount of separation required is based on the quantity of propellant present and the propellant use at the location. Planning for protection and safety of personnel and equipment must start at the initial facility design stages.

Oxygen used alone, as in pump, heat transfer, or component tests and bulk storage, can be stored safely without extensive separation distances from neighboring activities or structures as long as fuels are not present. The installation and location of such oxygen storage systems shall conform to the requirements in Sections **6.4.2** of this chapter.

When oxygen is used in conjunction with fuels, such as in combustion tests, rocket tests, or oxygen storage near fuel storage, additional requirements govern the storage and use locations. Quantity-distance requirements in Section 6.4.3 govern these situations, with specific distances required for different fuels, depending on the quantities of fuel and oxygen present.

6.4.1 Quantity Distance

The quantity-distance relations are intended as a guide in the choice of sites and separation distances. The distances given are based on the total quantity of propellants present. These distances may be difficult to achieve, but proper design can sometimes guarantee that only a portion of the total propellants will be involved in an accident. The proper design requires an extensive hazards analysis that would detail all hazards, controls, safeguards, recommendations, risk indices, and applicable code analyses. Separation distances may be waived where small quantities of liquid oxygen are used in well-controlled laboratory experiments. A hazard analysis shall be performed for each facility propellant system or subsystem. Whenever a site does not meet the quantity-distance requirements of Section **6.4.2** or**6.4.3**, , the appropriate design, hazards analysis, and specific deviation request are to be submitted to the appropriate area safety committee for evaluation.

6.4.1.1 Quantity-Distance Concept

Quantity distances are based on the concept that the effects of fire, explosion, and detonation can be reduced to tolerable levels if the source of hazard is kept far enough from people and facilities. These distances are based entirely on the estimated damage that could result from an incident, without considering probabilities or frequency of occurrence. Tests and experience are employed to determine how the effects of an accident are related to the quantity of material involved in the accident.

6.4.2 Quantity-Distance Guidelines for Storing Bulk Liquid Oxygen for Nonpropellant Use (Without Fuels)

The required separation distance of nonpropellant bulk oxygen storage systems from a number of different exposures, including inhabited buildings, public traffic routes, property lines, flammable and combustible materials, etc…. is given in 29 CFR 1910.104 and NFPA 55. At GRC these requirements apply to non-propellant applications. These standards contain very similar requirements with some difference in the definition of a bulk system capacity. NFPA 55 has some additional recommendations also. Using these distances assumes that all other requirements of the relevant sections of the standard are followed. Note that fire barriers can affect the required distances for some of the exposure categories. Quantity-Distance Guidelines for Storing Bulk Liquid Oxygen for Propellant Use

6.4.3

When liquid oxygen storage and fuel systems are part of a test stand or test area, there is a possibility of reaction with the oxidizer and fuel outside of the normal test parameters or system . A potential reaction is explosion or detonation of the oxygen-fuel mixture with resulting blast overpressure and fragments. For liquid oxygen in conjunction with a liquid fuel, the quantity distances are based on blast hazards and fragmentation. These quantity-distance determinations are given in NASA STD 8719.12,“Safety Standard for Explosives, Propellants, and Pyrotechnics”. NASA STD 8719.12 defines specific hazardous locations associated with propellant / engine testing such launch pads, static test stands, ready storage, etc….. A test area in one of these categories shall have QD determined per NASA STD 8719.12. A method for determining the QD is given for each specific hazardous location category. This requires determination of total propellant weight and possibly explosive equivalent (depending on location category). The quantity distances are those to inhabited buildings and public traffic routes and intraline distances for various quantities of equivalent propellant mixtures. Intraline distance is the minimum distance necessary to limit direct propagation of an explosion by the blast wave from one run or storage complex containing both oxidizers and fuels to another similar complex. Personnel injuries of a serious nature owing to fragments, debris, firebrands, and such are likely.

6.4.4 Quantity-Distance Guidelines for Gaseous Oxygen Storage

Quantity-distances for bulk gaseous oxygen storage facilities are intended to provide facility protection from external fire exposure. The installation and location of bulk gaseous oxygen systems shall conform to the requirements in NFPA 55. As defined by NFPA 55, a bulk oxygen system is an assembly of equipment, such as oxygen storage containers, pressure regulators, safety devices, vaporizers, manifolds, and interconnecting piping, that has a storage capacity of more than 20,000 cubic feet (566 cubic meters) of oxygen, including unconnected reserves at the site. The bulk oxygen system terminates at the point where oxygen at service pressure first enters the supply line. The oxygen containers may be stationary or movable.

Bulk oxygen storage systems shall be located either above ground and outdoors or shall be installed in a building of fire-resistant construction that is adequately vented and is used exclusively for storing oxygen. Fire-resistant building construction is defined in NFPA 220, Standard on Types of Building Construction.

Containers and associated equipment should not be located beneath or be exposed to the failure of electric power lines or piping containing any flammable liquid or gas.

6.4.5 Site Considerations

To provide minimum risks to personnel and equipment, liquid oxygen installations shall be at recommended distances from buildings, fuel storage facilities, and piping. An impermeable, noncombustible barrier shall be provided to deflect any accidental flow of oxygen liquid or vapor from hazardous equipment such as pumps, energized electrical equipment, fuel lines, and so on. In addition, the following guidelines apply:

- Manholes and cable ducts are not safe for oxygen storage and test areas.
- Noncombustible barriers shall be provided to deflect any accidental flow of liquid oxygen away from the site boundaries and control areas.
- The release of spilled oxygen into public drainage systems must be prevented.
- Liquid oxygen tanks shall be located away from oil lines and places where hydrocarbons and fuels can accumulate.
- The location and amount of flammable liquid in nearby storage areas should be reviewed frequently.
- Ground slope modifications, appropriately sized gullies and dikes, and barricades should be used for protection.
- Oxygen storage and use facilities shall be protected from pump failures and other possible sources of shrapnel.
- Liquid oxygen systems shall not be located over or near asphalt roadways.

6.4.5.1 Barricades

Shrapnel-proof barriers may be used to prevent the propagation of an explosion from one tank to another and to protect personnel and critical equipment. The proper height and length of a barricade shall be determined by line-of-sight considerations. Barricades, when required, must block the line of sight between any part of equipment from which fragments can originate and any part of the protected items. Protection of a public roadway shall assume a 12-foot-high vehicle on the road. Barricade design shall comply with DOD 6055.9.

Barricades are needed in oxygen test areas to shield personnel, Dewars, and adjoining areas from blast waves or fragments and may be needed to isolate liquid oxygen storage areas that are close to public property.

6.4.5.2 Dikes, Shields, and Impoundment Areas

To control travel of liquid and vapor due to spills, the facility should include dikes, shields for diverting spills, or impoundment areas. Any loading areas and terrain below transfer piping should be graded toward a sump or impoundment area.

Dikes surrounding liquid storage vessels shall be designed to contain 110 percent of the liquid oxygen in the fully loaded vessel.

6.4 Verification: Siting criteria for oxygen storage or use is defined in the system design documentation and can be reviewed in the safety permit package or facility records. The approved criteria (in compliance with the above requirements) can be audited via a facility inspection of the system and or storage vessel(s).

6.4.5.3 Structures

The storage facility (including support structures, roadways, drainage, etc.) should be made of fire-resistant materials and should be well ventilated. Normally, because of their special insulation, liquid oxygen storage tanks are not covered. If a storage facility requires protection, any open shed structure of fire-resistant materials may be used.

6.4.5.4 Ventilation

Areas in which liquid oxygen is handled must always be well ventilated to prevent excessive concentration of the gas. The liquid must never be disposed of in confined areas or in places that others may enter. Gaseous oxygen will increase the intensity of any fire.

6.4.5.5 Grounding and Lightning Protection

Buildings, storage systems, and transfer facilities shall be properly grounded against static electricity (resistance to ground checked every 6 months and less than 10 ohms) and should have approved lightning protection.

6.4.5.6 Housekeeping

Surrounding areas shall be kept free of grease, oil, oily waste, and all other organic materials (including vegetation). Smoking, sparks, and open flames are not permitted in storage areas.

6.4.5.7 Hazard Warning

The bulk oxygen storage location shall be permanently placarded “OXYGEN – NO SMOKING – NO OPEN FLAMES.”

6.4.6 Electrical Wiring and Equipment

Oxygen storage and test installations are not classified as hazardous locations as defined and covered in Article 500 of NFPA 70, National Electrical Code. Therefore, general purpose or weatherproof types of electrical wiring and equipment are acceptable, depending on whether the installation is indoor or outdoor. Such equipment shall be installed in accordance with the applicable provisions of NFPA 70.

Instrumentation and signal conditioner circuitry installed in oxygen propellant systems should be designed to minimize the overheating and arcing that might result from a sensor system short. Materials should be chosen to minimize the chance of ignition should a short occur. In situations where arcing can occur, testing should verify that the maximum possible spark energy is insufficient to cause ignition of adjacent materials (Bond, et al. 1983).

6.5 Materials (*ASTM MNL36, ASTM G 63, ASTM G 94*)

Safe use of oxygen requires the control of potential ignition energy mechanisms within oxygen systems by judiciously selecting ignition-resistant materials.

6.5.1 Factors Affecting Selection

The basic reason for pursuing oxygen compatibility in systems is to minimize the fire hazard; it is wholly separate from considerations of corrosion, chemical attack, mechanical stability, material physical properties, and the ability to withstand cleaning procedures.

The selection of a material for use with oxygen or oxygen-enriched atmospheres is primarily a matter of understanding the circumstances that cause oxygen to react with the material. Most materials in contact with oxygen

will not ignite without a source of ignition energy. When an energy input exceeds the configuration-dependent threshold, ignition and combustion may occur.

To safely use oxygen, appropriate ignition-resistant materials specific to the oxygen environment must be selected. Only those oxygen-compatible materials that have demonstrated combustion resistance well above the maximum expected operating conditions at each local area in a system should be chosen. Currently, no single test has been developed that can be applied to all materials to determine either absolute ignition limits or consistent relative ratings.

Major progress toward enabling oxygen systems to cope with the demands for higher performance, pressures, temperatures, and so forth has been made by designing systems that protect or shield the more susceptible non-metallic material from direct impingement or interface with oxygen (Bond, et al. 1983) and by empirically testing materials in configurations representing their intended uses.

6.5.2 General Guidelines for Materials Selection

The final selection of a material for an oxygen application is an engineering tradeoff involving the chemical compatibility, the ignition and combustion characteristics, the physical properties of the material, the cost, and the consequences of a failure. Proper material choices, based on experimentally obtained databases, can markedly reduce the probability of system ignition. Relative ranking and apparent ignition temperature values for many materials have been established through experimentation.

Materials selected for cryogenic oxygen service shall have the required structural ductility and notch sensitivity characteristics.

The following references are strongly recommended:

- ASTM MNL36: Safe Use of Oxygen System Design, Material Selection, Operations, Storage, and Transportation,
- Design Guide for High Pressure Oxygen Systems (Bond, et al. 1983); and Fire Hazards in Oxygen Systems (ASTM G4.05).
- ASTM G63–92: American Society of Testing and Materials, Standard Guide for Evaluating Nonmetallic Materials for Oxygen Service
- NFPA 53: Recommended Practice on Materials, Equipment, and Systems Used in Oxygen-Enriched Atmospheres.

6.5.3 Metals for Low-Pressure Oxygen Service

6.5.3.1 Gaseous Oxygen

Metals acceptable for low-pressure (nominally less than 1000 psia) gaseous oxygen service include

- Aluminum-nickel
- Aluminum alloys-nickel alloys
- Copper-stainless steel
- Copper alloys

See Table B.2, Some Recommended Materials for Oxygen Service, for a partial list of these materials and their applications.

6.5.3.2 Liquid Oxygen

Metals recommended for service with liquid oxygen are

- Nickel and nickel alloys
    - Hastelloy B-nickel
    - Inconel-X-Rene 41

    - K-Monel
- Stainless steel types
    - 304–310
    - 304L–316
    - 304ELC–321
- Copper and copper alloys
    - Copper–Cupro-nickel
    - Naval brass
    - Admiralty brass

NOTE: *Refer to Chapter 3, Materials Section of ASTM MNL36: Safe Use of Oxygen System Design, Material Selection, Operations, Storage, and Transportation, January 2000, for more detailed materials information.*

6.5.4 Prohibited Metals

Certain metals are prohibited from being used in oxygen systems (see Restricted Alloys, Chapter 3 of ASTM MNL36).

6.5.4.1 Cadmium

The toxicity and vapor pressure of cadmium restrict its use.

6.5.4.2 Titanium

Titanium metal shall not be used with liquid oxygen at any pressure or with gaseous oxygen or air at oxygen partial pressures above 30 psia. Titanium and its alloys are impact sensitive in oxygen.

6.5.4.3 Magnesium

Magnesium metal shall not be used in oxygen systems. In addition, its alloys shall not be used except in areas with minimal exposure to corrosive environments. Reactivity with halogenated compounds constrains its use with lubricants containing chlorine and fluorine.

6.5.4.4 Mercury

Mercury shall not be used in oxygen systems in any form because it is toxic; in addition, it and its compounds can cause accelerated stress cracking of aluminum and titanium alloys.

6.5.4.5 Beryllium

Beryllium and its oxides and salts are highly toxic and, therefore, they shall not be used in oxygen systems or near oxygen systems where they could be consumed in a fire.

6.5.5 Nonmetallic Materials

The primary concerns about using nonmetals in oxygen systems are their potential reactivity with the oxidant and limitations at cryogenic temperatures. Their ignition temperatures are generally lower than those for metals, and their low thermal conductivity and heat capacity make them much easier to ignite. The selection of these materials for use in oxygen is based on experience and testing of impact, ignition, and flammability characteristics. For more information, consult ASRDI Oxygen Technology Survey, Volume 9 (Schmidt and Forney, 1975) and ASTM MNL36, Chapter 3, Nonmetallic Materials.

Nonmetals that have been used successfully are

- Tetrafluoroethylene polymer (TFE, Halon TFE, Teflon®, or equivalent)
- Unplasticized chlorotrifluoroethylene polymer (Kel F®, Halon CTF, or equivalent)

- Fluoro-silicone rubbers and fluorocarbons (Viton®), batch-tested for acceptability
- Lubricants such as Krytox® and Triolube 16® (Aerospace Lubricants)

Table **B.3** contains a partial list of nonmetals and their applications.

Nonmetallic material selection may be based on data presented in JSC Specification SE R 0006B. Table 2 in Design Guide for High Pressure Oxygen Systems (Bond, et al. 1983) lists ignition variability of nonmetallic materials currently used in oxygen systems and of nonmetallic materials not requiring batch-testing control, along with some use restrictions.

6.5.6 Materials for High-Pressure Oxygen Service

The materials listed in Table B.2 of this chapter (under the high-pressure heading) have demonstrated superior resistance to ignition and fire propagation in high-pressure (nominally greater than 1000 psi) oxygen systems.

6.5 Verification: Material selection criteria for oxygen system components is defined in the system design documentation and can be reviewed in the safety permit package or facility records. The approved criteria (in compliance with the above requirements) can be audited via a system inspection and or review of final component data sheets, material certification, drawings, etc…...

6.5.7 Selecting Material by Configuration Testing

This information taken from Bond et al. (1983)

If it is not possible to find, even with batch/lot testing, materials that meet the functional requirements of a design, it may be possible to provide sufficient protection from ignition so that use of a susceptible material may be permitted. If this design approach is used, the adequacy of the design must be demonstrated through configuration testing at conditions more severe than the worst-case environment for the component in question. But configuration tests are considered valid only if they are conducted on hardware identical to the hardware proposed for use.

The configuration tests should use oxygen pressures at least 10 percent above the worst-case condition. Expected temperature limits should be exceeded by at least 50 °F. If the material is to be subjected to rapidly changing pressures, the pressure rise rate used in the configuration tests should be at least twice that which the component is expected to experience in operation.

If cycling or multiple reuse of the component is a design requirement, the configuration testing should exceed by a factor of 4 the expected number of cycles or reuses. Failure of the configuration test article before completion of the required number of cycles would limit the use life of the component to one-fourth the number of cycles actually completed before failure.

6.5.8 Materials Tests

If a designer chooses a material that has not been previously approved or evaluated for oxygen service, rationale, procedures, and data, as presented in the following guides, shall be provided to the area safety committee, pressure systems office, and SHeD for approval:

- ASTM G 63 87: Standard Guide for Evaluating Nonmetallic Materials for Oxygen Service
- ASTM G 94 90: Standard Guide for Evaluating Metals for Oxygen Service

6.6 System Design (*ASTM MNL36, ASTM G88–90*)

Safe use of oxygen requires the control of potential ignition energy mechanisms within oxygen systems by judiciously selecting system designs. The generally accepted steps in the design process are provided in

- Chapter 5 of ASTM MNL36

- ASTM G88–90, 1991: Standard Guide for Designing Systems for Oxygen
- Design Guide for High Pressure Oxygen Systems (Bond, et al. 1983)

6.6.1 General System Considerations

The following design principles shall be adopted to achieve maximum oxygen safety at GRC.

6.6.1.1 Inherent Safety

Oxygen systems shall be designed selecting materials that are ignition and combustion resistant at the maximum expected operating conditions. Safe oxygen systems must include designs for preventing leaks, eliminating ignition sources, establishing and maintaining a clean system, avoiding cavitation, and preventing resonant vibration.

6.6.1.2 Two Lines of Defense

In addition to the inherent safety features, at least two failure-resistant, independent barriers shall be considered to prevent a given failure from leading to a serious mishap. Thus, at least two undesirable, independent events would have to occur simultaneously under either normal or emergency conditions before there would be a potential danger to personnel or major damage to equipment and property.

6.6.1.3 Fail-Safe Design

The equipment, power, and other system services shall be designed and verified for safe performance in the normal and maximum designed operational regimes. Any failures shall cause the system to revert to conditions that are safest for personnel and that will cause the least property damage. Redundant components shall be incorporated into the design to prevent system failures which can lead to serious consequences.

6.6.1.4 Automatic Safety Devices

System safety valves, flow regulators, and equipment safety features shall be installed to automatically control hazards.

6.6.1.5 Alarms and Warning Systems

Warning systems to monitor those parameters of the storage, handling, and use of oxygen that may endanger personnel and cause property damage shall be incorporated into oxygen system design. Warning systems shall consist of sensors to detect abnormal conditions, to measure malfunctions, and to indicate incipient failures. Data transmission systems for caution and warning systems shall have sufficient redundancy to prevent any single-point failure from disabling an entire system.

6.6.1.6 Formal Procedures

All oxygen operations shall be conducted by knowledgeable, trained, and certified personnel following formal procedures. Personnel involved in design and operations will carefully adhere to the safety standards of this chapter and must comply with regulatory codes. System cleaning procedures shall be adopted from proven methods successfully used in industry or at GRC as defined in Section **6.7**.

6.6.1.7 Personnel Training

Personnel assigned to handle/use liquid and gaseous oxygen or to design equipment for oxygen systems must become thoroughly familiar with the physical, chemical, and hazardous properties of oxygen (Section 6.1 of this chapter).

6.6.1.8 Operator Certification

Operators shall be certified to handle liquid and gaseous oxygen under normal and emergency conditions according to Section **6.1.2** of this chapter.

6.6.1.9 Safety Review

At a minimum, all oxygen design, handling, and test operation activities shall be subject to an independent, third-party safety committee review and subject to a permit issued by the responsible area safety committee. In addition,

any modification to a facility oxygen system or research hardware shall be brought to the attention of the appropriate safety committee for review prior to operation.

6.6.2 Velocity and Thermal Considerations

The use of high-pressure oxygen requires certain design considerations that need special attention at the system level. The architecture, flow dynamics, and thermal design of the system are important.

6.6.2.1 System Flow Velocity

From Bond et al. (1983); Schmidt and Forney (1975); and Williams, Benz, and McIlroy (1988).

The primary source of concern under high-velocity oxygen flow conditions is the entrainment of particulates and their subsequent impingement on a surface, such as at a pipe bend. The result can be propellant system ignition. The following flow dynamics design practices are recommended to avoid oxygen system fires:

1. If practical, avoid velocities that are nominally above 100 feet/second in gaseous oxygen and avoid cavitation in liquid oxygen. Where this is impractical, use the alternate materials recommended in the references called out in Section **6.5** or those listed under the "High Pressure" column of Table B.2 of this chapter.

   NOTE: *During testing at NASA White Sands Test Facility (WSTF) in 1988, the oxygen velocities required for ignition of carbon steel, 316 stainless steel, and 304 stainless steel owing to the impact of a standard particle mixture were investigated at various oxygen pressures. Ignition of the particle mixture and the three alloys occurred at oxygen velocities greater than 146 feet/second and at pressures between 2900 and 3480 psi. The WSTF data suggest that specimen ignition appears independent of pressure up to about 4000 psi. Compared with these tests and other recent data, the CGA (CGA G 4.4) oxygen velocity limits for safe operations may be excessively conservative at high pressures and too liberal at low pressures. During 1991 communications with WSTF, they consider flow velocities of 100 feet/second in gaseous oxygen systems to be low-velocity flow. This value has been selected as the current guideline design value for this chapter. (See Williams, Benz, and McIlroy, 1988 for details.)*

2. If possible, avoid the use of nonmetals at locations within a system where sonic flow or cavitation can occur.

3. Maintain fluid system cleanliness and limit entrained particulates as specified in Section **6.7**.

6.6.2.2 System Thermal Design

System thermal design considerations shall include thermal conditioning at startup and avoiding the lockup of cryogenic oxygen in a system segment. It is necessary to bring components to thermal equilibrium before starting up cryogenic oxygen turbo-pump systems and to avoid hazardous component thermal transients which may affect fits and clearances, cause rotor dynamic instabilities, or lead to high-speed rubbing friction. Any of these problems may result in ignition. Provision shall be made to provide thermal conditioning of the cryogenic system and components by gradually bleeding through cryogenic gas and then liquid.

Cryogenic oxygen hydraulically locked up between two valves or flow control components can absorb heat and, through the increase of pressure, cause structural failure. The system and components shall be designed to provide appropriate pressure relief.

6.6 Verification: System design documentation may be reviewed during safety permit reviews or any other time to verify the above requirements were incorporated or considered in the process.

6.7 System Cleanliness (*ASTM MNL36, ASTM G93–88, CGA G–4.1*)

Safe use of oxygen requires the control of potential ignition energy mechanisms within oxygen systems by maintaining scrupulously clean systems. Cleanliness (contamination control) is critical in oxygen components and systems. Contamination can cause ignition of components or systems by a variety of mechanisms, such as particle

impact, mechanical or pneumatic impact, or spontaneous ignition. In an oxygen environment, contaminants increase the ignitability of both metallic and nonmetallic materials.

6.7.1 General Policy

Before being placed in service, liquid and gaseous oxygen systems and their system components shall be completely cleaned to meet GRC end-result cleanliness quality specifications (Section **6.7.4**).

Furthermore, since oxygen components and systems shall be periodically reinspected to ensure that safety and component integrity are maintained during the life of the system, there are more opportunities for contamination. If the oxygen system contains components with a history of in-service failures, appropriate traps or other easily analyzed components shall be removed, inspected, and periodically replaced (Section **6.7.5**).

6.7.2 Oxygen Cleanliness Supplements

The following publications contain proven, practical guidelines that were developed to safely and successfully control contamination in oxygen propellant systems.

- ASTM G93–88: Standard Practice for Cleaning Methods for Materials and Equipment Used in Oxygen-Enriched Environments
- CGA Pamphlet G–4.1: Cleaning Equipment for Oxygen Service
- NASA Reference Publication 1113: Design Guide for High Pressure Oxygen Systems, Chapters 6 to 8 (Bond, et al. 1983)
- ASRDI Oxygen Technology Survey, Volume 2: Cleaning Requirements, Procedures, and Verification Techniques (Bankaitis and Schueller, 1972)
- MSFC Spec 164: Cleanliness of Components for Use in Oxygen, Fuel, and Pneumatic Systems (contains acceptable methods of cleaning pipe, tubing, and flex hose)
- KSC–C–123: Specifications for Surface Cleanliness of Fluid Systems

6.7.3 Cleaning Procedures

Cleaning methods and subsequent inspections must produce the degree of cleanliness required for the safe operation of oxygen service equipment and the necessary propellant purity required for experimental test operations.

Cleaning a component or system for oxygen service involves the removal of combustible contaminants, including the surface residue from manufacturing; hot work, and assembly operations, as well as the removal of all cleaning agents. These cleaning agents and contaminants include solvents, acids, alkalis, water, moisture, corrosion products, non-compatible thread lubricants, filings, dirt, scale, slag, weld splatter, organic material (such as oil, grease, crayon, and paint), lint, and other foreign materials.

Injurious contaminants can be removed by cleaning all parts and maintaining this condition during construction; by completely cleaning the system after construction; or by a combination of the two.

The prevention of recontamination before final assembly, installation, and use is essential to safe oxygen system operation.

The organization performing the cleaning service shall have the responsibility of developing detailed cleaning procedures. The GRC oxygen systems cleanliness acceptability shall be based only on the quality specifications of the cleaning end result and not on the cleaning procedures used. The organization performing the cleaning shall be completely responsible for meeting the cleanliness specifications of Section 6.7.4, regardless of the procedures used.

The GRC organization responsible for operating the oxygen system or equipment must be assured that the procedures are compatible with the units being cleaned and that the procedures will accomplish the appropriate level of cleanliness.

The GRC system owner/user has the option of exercising approval authority of the cleaning procedures to be used on his/her systems.

6.7.3.1 Cleaning Procedure Safety

The organization performing the cleaning services shall have responsibility for all safety aspects of oxygen cleaning procedures. Guidance for safe procedures can be found in ASTM G 93–88, Section 8, Cleaning Methods.

6.7.3.2 Special Considerations

Complete systems may require disassembly for suitable cleaning. Components that could be damaged during cleaning should be removed and cleaned separately. Cleaning or disassembly operations that might affect tolerances or impair calibration of precision components should be performed only under the supervision of personnel qualified in the handling, calibration, and assembly of the components.

The cleaning procedures established for each system or component shall be compatible with the design configurations. Prior to use, establish the compatibility of cleaning agents with all construction materials, making sure that time or temperature constraints are not exceeded.

6.7.4 Verification of Oxygen System Cleanliness

A key element of the GRC contaminant control safety plan is the final inspection and verification of system cleanliness by using an approved GRC acceptance specification. Experience has shown that approximately one-half of all parts cleaned fail on the initial sampling to meet either the particulate or the nonvolatile residue (NVR) specification. Should this occur, recleaning is required until all parts pass both specifications (see Bond, et al. 1983).

6.7.4.1 Inspection Procedures

Procedures detailed in ASTM G 93–88, Section 10, Inspection, shall be followed to verify cleanliness of components and systems for GRC oxygen service.

6.7.4.2 GRC Cleanliness Acceptance Criteria

Acceptance criteria for all systems and components are based on KSC–C–123H, Surface Cleanliness of Fluid Systems. The acceptance level shall be 300–A, which is suitable for ground-based gaseous and liquid oxygen propellant systems at GRC (see Table D.1, Appendix D). This acceptance level represents a particle limit and a hydrocarbon limit identical to those that NASA Kennedy Space Center uses on ground equipment in oxygen service.

NASA has no standardized procedures for cleaning components or systems. Cleaning organizations may employ varying methods to meet the acceptance criteria of KSC–C–123H and the GRC Oxygen System Cleanliness specification.

Information on the use of approved substitutes for ozone depleting chemicals can be found at http://smad-ext.grc.nasa.gov/shed/pub/epm/epm19-OZONE(26).pdf. The most recently approved and successfully used solvent has been HFE 7100 for in-place cleaning of oxygen systems at GRC.

6.7.5 Recommendations for Reinspection

Oxygen components and systems shall be reinspected periodically to ensure that safety and component integrity are maintained during the life of the system. Determination of system and component reinspection intervals has proven to be a complex task. Detailed knowledge of construction materials, pressure levels, the use environment, and the service the system is performing must be applied. A record of reinspections must be kept on file and labels placed on the inspected components. In establishing the reinspection intervals, the following items should be considered:

- Routine disassembly and reassembly of piping systems invariably increases the level of system contamination because particulates are generated.
- Sampling of an assembled system for gas-borne contaminants yields only limited data on the internal cleanliness. This method of system sampling cannot be directly correlated with the cleanliness of internal system surfaces.
- The reinspection plan must address the design service life of components.
- Additional insight regarding system contamination levels can be gained through systematic inspection of components (e.g., transducers, flex hoses, relief valves, filters) removed for calibration, proof testing, or

periodic maintenance. NASA STD 8719.17 provides in-service inspection requirements for oxygen systems components.

- Cleanliness levels in components and systems that have been in service shall be reverified to make sure the requirements of the GRC Oxygen System Cleanliness specification under Section **6.7.4** of this chapter are met.
- Reassembly procedures shall adhere to guidelines for original assembly, including assembly checkout.

6.7.5.1 Assembly of Propellant Systems

After system and component disassembly and cleaning, reassembly of components and systems must be stringently controlled to ensure that the achieved cleanliness levels are not compromised.

All components requiring reassembly (e.g., valves, regulators, and filters) should be reassembled in a filtered-air environment such as a clean room or flow bench. Personnel should be properly attired in clean-room garments and gloves. All tools that contact component internal parts must be cleaned to the specified levels of the parts.

6.7.5.2 Final System Checkout

After the system has been reassembled, a final pressure integrity and leak test should be performed with an appropriately filtered inert gas that has been analyzed for contaminants. Hydrostatic tests: **It is not recommended that hydrostatic tests be performed on cleaned systems since this is likely to contaminate them**. Conduct these tests on the components before cleaning and final assembly. Refer to Chapter 7, Pressure Systems Safety for pneumatic and hydrostatic pressure testing guidelines.

6.7.5.3 Cryogenic Cold-Shocking

Cold-shocking a newly assembled liquid oxygen system by loading it with clean liquid nitrogen following final assembly is highly recommended. After the cryogenic cold-shocking, the system should be emptied of liquid nitrogen and warmed to ambient temperature. Bolts and threaded connections must then be re-torqued to prescribed values, and gas leak-checking procedures should follow.

The entire system should be inspected for evidence of cracking, distortion, or any other anomaly, with special attention directed to welds. Then system cleanliness must be checked and verified.

6.7.5.4 Final Operational Tests

Final operational tests should be run with oxygen (liquid or gas, as required by the system) at rated pressure. If it is possible to substitute nitrogen for this test, this should be done for greater safety in the operational test. Only verified clean dry nitrogen shall be used for these tests. It is prudent to recheck the system filters for cleanliness after the test is completed.

It is a good practice to perform the first oxygen pressurization of a system by remote control, since assembly-generated contaminants can cause ignition.

6.7 Verification: Cleaning records, re-inspection intervals, etc… are to be maintained by system owners / users and may be audited prior to or during testing as well as reviewed during the safety permit review process.

6.8 Operating Procedures and Policies for Oxygen Systems (*ASTM MNL36*)

Safe use of oxygen requires the control of potential ignition energy mechanisms within oxygen systems by using appropriate operational procedures.

6.8.1 Formal Procedures

All oxygen operations shall be conducted by knowledgeable and trained personnel using formal written procedures. Personnel involved in design and operations shall carefully adhere to the safety standards of this chapter and must comply with regulatory codes.

Standard operating procedures (SOPs) with checklists shall be developed for common operations. The SOPs shall be prepared by persons familiar with the work being done and shall be reviewed and implemented by line management. SOPs for all hazardous operations shall be approved by the area safety committee.

The procedures shall be reviewed by a responsible safety committee (at least annually) for observance and improvement. Special procedures shall be developed to counter hazardous conditions when the system design and the use of safety equipment do not reduce the magnitude of a potential hazard to acceptable levels. The effectiveness of these procedures shall be verified through demonstration tests using sound engineering principles and judgment.

The buddy system, as specified in Section **6.2.1**, shall be followed for oxygen use operations.

6.8.2 Test Cell Entry

Entry into an operating test cell must be considered dangerous. Authorized personnel may gain entry only after conditions within the cell have been determined to be safe.

Test cells and buildings containing combustible or explosive mixtures shall not be entered under any condition. Personnel should be warned of combustible or explosive mixtures and high or low oxygen concentrations by detectors, sensors, and continuous sampling devices that operate both audible and visible alarms.

6.8.3 Transfer and Flow Guidelines

These general guidelines apply to both gaseous and liquid oxygen operations.

1. Storage, transfer, and test areas should be kept neat and free from combustibles and should be inspected frequently. An adequate water supply should be available for firefighting.
2. The manner in which transfer equipment is operated will be determined by local designs and construction, the type of equipment selected, and the procedures prescribed by either the cognizant authority or the equipment manufacturer.
3. Transfer and flow operations shall include procedures to assure that an appropriate level of oxygen system cleanliness has been reached before oxygen flow is begun.
4. After extended use and after periods of extended shutdown, inspections must be made for possible oxygen system contamination and for evidence of unsafe conditions in the equipment.
5. Great care must be exercised when reusing oxygen that has flowed through a propellant system. Flowing oxygen back to the supply tank may contaminate the supply; dumping or venting once-used oxygen is a preferred procedure.

6.8.4 Oxygen System Maintenance or Repair

Provisions shall be made to keep an oxygen system clean when it is opened for maintenance or repair. The following steps must be taken:

1. Isolate, insofar as possible, the portion of the system to be entered.
2. Verify that the system is drained and depressurized. Purge the oxygen system with an inert gas before opening it.
3. Confirm that the entire system is at ambient temperature to keep contaminated air from being sucked into the system. This is particularly important if a part of the system is nitrogen jacketed. “Breathing” may also be caused by barometric pressure variations or temperature changes. A slight positive pressure or purge may be necessary to keep the system from breathing.
4. Cap or seal openings into the part prior to reinstalling it in the system.
5. Purge and re-clean repaired parts of the system prior to reinstallation.

6. Make provisions for periodic cleaning of possible contaminant traps in a system, but every effort should be made to avoid such traps in the design.
7. When working on equipment where oxygen enrichment is a possibility, isolate the equipment by inserting a blank. A shutoff valve is not considered a positive means of isolation from a working oxygen system.

6.8.5 Operational Procedures for Gaseous Oxygen Tube Trailers and Cylinders

Quick-acting valves must not be used to start or stop gaseous oxygen systems. Most failures in gaseous oxygen systems are caused by sudden flow changes.

6.8.5.1 Specific Requirements for Gaseous Oxygen Tube Trailers

1. All GRC-owned gaseous oxygen tube trailers shall be fitted with remotely operated transfer shutoff valves of a Glenn standardized design and configuration. Only inert gas or air shall be used to operate these remote shutoff valves. Oxygen gas from the trailer sample panel shall NEVER be used to operate valves.
2. Trailer-to-facility transfer lines may be made of corrugated stainless steel or Teflon hose, with the proper pressure rating, inside an external braid of stainless steel. In such cases, proper restraining cables and anchoring are required. Gaseous oxygen flow velocities in the transfer line should be kept below 100 feet/second unless higher velocities can be safely tolerated.
3. Appendix C contains specific operational procedures to connect leak-check, purge, start up, and shut down the Glenn gaseous oxygen tube trailer systems.

6.8.5.2 Operational Procedures for Portable Gaseous Oxygen Cylinders

Specific operational procedures for the safe use of gaseous oxygen cylinders are found in the Compressed Gas Association Pamphlet CGA G 4.

6.8.6 Recommended Operational Procedures for Liquid Oxygen Systems

Specific operational check sheets should be formulated by the design and operations team and encompass the following elements as applicable.

6.8.6.1 Leak-Check Systems

Before operating a liquid oxygen system for the first time, cold-shock the entire system with clean liquid nitrogen and then check for leaks. Before loading, purge the system of air and water vapor. Recheck for cleanliness to be sure that cold shocking and leak checking did not contaminate the system.

6.8.6.2 Loading

Fill the system with liquid oxygen gradually to limit “geysering,” severe local temperature gradients, and surges in the system.

6.8.6.3 Operations

Do not proceed with testing until the system has reached thermal equilibrium. This precaution is particularly pertinent to turbo-machinery components in the system.

6.8.6.4 Shutdown

Purge the oxygen residue from all components of the system.

6.8.6.5 Unloading and Transfer Leaks

Make sure transfer hoses have been disconnected before moving the loading vehicle. Leaks are usually caused by deformed seals or gaskets, valve misalignment, or failures of flanges and equipment. A liquid oxygen leak may cause further failures of construction materials.

6.8.6.6 System Leak Repair

Do not repair any leak until all pressure in the system has been bled. All tools and fittings should be cleaned appropriately before use. If welding or brazing is required, the system must be made inert, repaired, and recleaned.

6.8.6.7 Condensation of Contaminants During Loading

Improper loading procedures for cryogenic oxygen can result in condensation of water or any other condensable vapor inside the system. In large systems, even contaminant levels measured in parts per million can produce a sizable frozen mass that could impede flow or system function.

6.8.6.8 Before Loading a Cryogenic System

Purge or evacuate from the system all air, water, and condensable vapors. Experimentation may be required to define the degree of purge or the number of evacuation cycles required.

6.8.6.9 Sampling Techniques

When required, collect samples of oxygen in a sealed container of appropriate design. Follow cleanliness and purging procedures to avoid contamination of the sample.

6.8.7 Transportation of Oxygen

Oxygen, compressed oxygen, and refrigerated liquid oxygen are subject to the U.S. Department of Transportation regulations for hazardous materials.

For complete information and specifications, refer to Title 49, CFR, Parts 100 to 177, Hazardous Materials Regulations.

6.8.8 Disposal of Oxygen

As classified in Title 40, CFR, Parts 260 to 265, Hazardous Waste Management, oxygen is not considered a hazardous waste. Uncontaminated liquid oxygen is best disposed of by allowing it to vaporize from a normal heat leak into the container and letting the vapor escape through the vent. Liquid oxygen may also be piped into an area free from combustible material and allowed to vaporize.

6.9 Specifications

Liquid oxygen, used as an oxidizer in propellant systems, shall conform to MIL–P–25508E, Military Specification, 1995, Propellant, Oxygen. Type II propellant-grade liquid oxygen contains a minimum of 99.5 percent oxygen; the major impurity is argon. Gaseous oxygen used to purge and pressurize propellant systems shall conform to MIL–P–25508E, Type I or Fed. Spec. BB O–925A. (Properties for *breathing oxygen* are specified in MIL–O–27210F Military Specification, 1997, Oxygen, Aviators Breathing, Liquid and Gas.)

7.0 RECORDS

Certification of System Cleanliness (issued by the organization performing the cleaning or verification)

7.1 Pressure Systems Office (PSO) Certification Documents (all maintained by the PSO)

- Nondestructive examination (NDE) reports
- Risk Assessment Report
- System Certification Report
- Pressure System Database

7.2 NASA C Forms (all maintained by the PSO except the C-83 and C-83A)

Form Number	Form Name
C–83	Safety Variance Request (maintained by SHeD)
C–83A	Safety Variance Change Request (maintained by SHeD)

C–802	Pneumatic Test Request
C–804	Pneumatic Test Permit
C–4026	Pressure Vessel Pneumatic Test Checklist
C–4010	Pressure Vessel Pneumatic Test Report
C–4020	Piping System Pneumatic Test Checklist
C–4014	Piping System Pneumatic Test Report
C–4022	Pressure Vessel Hydrostatic Test Checklist
C–4016	Pressure Vessel Hydrostatic Test Report
C–4018	Piping System Hydrostatic Test Checklist
C–4012	Piping System Hydrostatic Test Report
C–4027	Standard Exclusion Request
C–4025	Weld Request Form

8.0 REFERENCES

This chapter is based on the best test information available. Much of the material was compiled directly from Bond et al. (1983); Bankaitis and Schueller (1972); Schmidt and Forney (1975); NSS/FP 1740.12; ASTM G93–88; Other sources include CGA Pamphlets G4.1 and S 1.2; NFPA 53 and 55; and Volumes 1 and 3 of CPIA 394.

References mentioned in this chapter can be found in the following locations:

ASTM, CGA, DOD, MIL, and NFPA documents can be obtained by accessing the Agency wide Full Text Standards System (password and ID required).

NPD and NSS documents can be obtained by accessing the NASA Headquarters Directives and Standards page.

Other references may be available in the GRC Library or may be obtained by contacting the Glenn Operational Safety Branch.

Document Number	**Document Name**
	Aerospace Structural Metals Handbook: 1989 Publication with 1988 Supplement XXI Incorporated. Metals and Ceramics Information Center, Columbus, OH, 1989.
AFM 161 30	Air Force Manual. 1984: Chemical Rocket/Propellant Hazard
ASTM G4.05	American Society for Testing and Materials. 1990: Fire Hazards in Oxygen Systems. ASTM Standards Technology Training Course book, First ed.
ASTM G63	American Society for Testing and Materials. 1999: Standard Guide for Evaluating Nonmetallic Materials for Oxygen Service. ASTM Standards, Vol. 14.02.
ASTM G88	American Society for Testing and Materials. 1997: Standard Guide for Designing Systems for Oxygen Service. ASTM Standards, Vol. 14.02.
ASTM G93	American Society for Testing and Materials. 2003: Standard Practice for Cleaning Methods for Materials and Equipment Used in Oxygen-Enriched Environments. ASTM Standards, Vol. 14.02.
ASTM G94	American Society for Testing and Materials. 1992: Standard Guide for Evaluating Metals for Oxygen Service. ASTM Standards, Vol. 14.02.
ASTM MNL36	American Society of Testing and Materials, January 2000, Safe Use of Oxygen and Oxygen Systems: Guidelines for Oxygen System Design, Materials

	Selection, Operations, Storage, and Transportation, ASTM Standards ISBN 0–8031–2083–4.
	Baker, W.E., et al. 1978: Workbook for Estimating Effects of Accidental Explosions in Propellant Ground Handling and Transport Systems. NASA CR–3023.
	Bankaitis, H.; and Schueller, C.F. 1972: ASRDI Oxygen Technology Survey, Vol. 2: Cleaning Requirements, Procedures, and Verification Techniques. NASA SP–3072.
	Bauer, H.; Wegener, W; and Windgassen, K.F. 1970: Fire Tests on Centrifugal Pumps for Liquid Oxygen. Cryogenics, Vol. 10, No. 3, June 1970, pp. 241–248.
	Bond, A.C., et al. 1983: Design Guide for High Pressure Oxygen Systems. NASA RP–1113.
	Bransford, J.W., et al. 1980: LOX/GOX Mechanical Impact Tester Assessment. NASA TM–74106.
	Cataldo, C.E. 1981. LOX/GOX Related Failures During Space Shuttle Main Engine Development. NASA TM–82424.
CGA Pamphlet G 4	Compressed Gas Association. 2002: Oxygen.
CGA Pamphlet G 4.1	Compressed Gas Association. 2004: Cleaning Equipment for Oxygen Service.
CGA Pamphlet G 4.4	Compressed Gas Association. 2003: Oxygen Pipeline Systems.
CGA Pamphlet S 1.2	Compressed Gas Association. 2003: Pressure Relief Device Standards. Pt. 2: Cargo and Portable Tanks for Compressed Gases.
CGA Pamphlet S 1.3	Compressed Gas Association. 2003: Pressure Relief Device Standards. Pt. 3: Pressure Relief Device Standards. Pt. 3: Stationary Storage Containers for Compressed Gases.
	Commander, J.C.; and Schwartz, M.H. 1966: Cooldown of Large-Diameter Liquid Hydrogen and Liquid Oxygen Lives. (AGC 8800 54, Aerojet General Corp., NASA Contract NAS3 2555). NASA CR–54809.
	Cosman, A.L., et al. 1971: Technical Manual of Oxygen/Nitrogen Cryogenic Systems. NAVAIR 06 30 501. Naval Air Systems Command.
CPIA 394 VOL 1	Chemical Propulsion Information Agency. 1984: Hazards of Chemical Rockets and Propellants. Vol. 1: Safety, Health, and the Environment. J.A.E. Hannum, ed. Johns Hopkins University, Silver Spring, MD.
CPIA 394 VOL 3	Chemical Propulsion Information Agency. 1985: Hazards of Chemical Rockets and Propellants. Vol. 3: Liquid Propellants. J.A.E. Hannum, ed. Johns Hopkins University, Silver Spring, MD.
	CRC Handbook of Chemistry and Physics: 77th ed. 1996. D.R. Lide, ed.
DOD 6055.9–STD	Department of Defense. 1999: Ammunition and Explosives Safety Standards. Glenn Research Center at Lewis Field, Pressure Vessel/System Recertification Handbook, Rev., October 2001
	Hust, J.G.; and Clark, A.F. 1972: A Survey of Compatibility of Materials with High Pressure Oxygen Service. NASA CR–120221.
	Johnson, R.L., et al. 1987: NASA JSC Requirements for Flight and Flight Prototype Liquid and High Pressure Oxygen Components and Systems. NASA JSC SE 0 0104. NASA Johnson Space Center, Houston, TX.

JSC 02681, Rev. J.	NASA Johnson Space Center. 1982: Nonmetallic Materials Design Guidelines and Test Data Handbook.
JSC SN C 0005, Rev. A.	NASA Johnson Space Center. 1982: Contamination Control Requirements.
	JSC Specification SE R 0006B. NASA Johnson Space Center. 1987: Requirements for Materials and Processes.
JSCM 5322B.	NASA Johnson Space Center. 1982: Contamination Control Requirements Manual.
	Kimzey, J.H. 1968: Flammable and Toxic Materials in the Oxygen Atmosphere of Manned Spacecraft. NASA TN D–341.
	1970. Review of Factors Affecting Ignition of Metals in High Pressure Oxygen Systems. NASA TM–X 67201.
	1971. Fire Extinguishment in Hypobaric and Hyperbaric Environments. Conference on Materials for Improved Fire Safety, NASA SP–5096, pp. 163 169.
KSC–C–123H	NASA Kennedy Space Center. 2000: KSC Specification. Surface Cleanliness of Fluid Systems, Specifications for.
	Lapin, A. 1972: Liquid and Gaseous Oxygen Safety Review. (APC1 TM 184, Vols. 1 4, Air Products and Chemicals, Inc., NASA Contract NAS3 15083.) NASA CR–120922.
	Laurendeau, N.M. 1968: The Ignition Characteristics of Metals in Oxygen Atmospheres. NASA CR–140632.
	MIL–0–27210, Military Specification, 1997: Oxygen, Aviators Breathing, Liquid and Gas.
	MIL–P–25508, Military Specification, 1995: Propellant, Oxygen.
	MSFC HDBK 527 Rev. F, NASA Marshall Space Flight Center. 1988: Materials Selection List for Space Hardware Systems.
	MSFC Spec 164B, NASA Marshall Space Flight Center. November 1996: Cleanliness of Components for Use in Oxygen, Fuel, and Pneumatic Systems.
	National Fire Protection Association. 2003: Fire Protection Handbook. Nineteenth ed. A.E. Cote. Quincy, MA..
NFPA 53	National Fire Protection Association. 2004: Recommended Practice on Materials, Equipment, and Systems Used in Oxygen-Enriched Atmospheres.
NFPA 55	National Fire Protection Association. 2005: Standard for the Storage, Use, and Handling of Compressed Gases and Cryogenic Fluids in Portable and Stationary Containers, Cylinders, and Tanks.
NFPA 70	National Fire Protection Association. 2005: National Electrical Code.
NFPA 220	National Fire Protection Association. 1999: Standard on Types of Building Construction.
NHB 8060.1	NASA Handbook. 1981: Flammability, Odor, and Offgassing Requirements and Test Procedures for Materials in Environments That Support Combustion. (NASA TM–84066.)
NPR 8715.3	NASA Safety Manual w/changes through Change 2, 3/31/04.
NASA STD 8719.12	Safety Standard for Explosives, Propellants, and Pyrotechnics.
	Lloyd, James, D, QS/Director, Safety and Risk Management: NASA Adoption of Voluntary Consensus Standards, Headquarters Letter of April 24, 2001.

Ordin, P.M. 1971: Mishaps with Oxygen in NASA Operations. NASA TM–X 67953.

Pelouch, J.J., Jr. 1974: ASRDI Oxygen Technology Survey, Vol. 7: Characteristics of Metals That Influence System Safety. NASA SP–3077.

Phillips, B.R. 1975: Resonance Tube Ignition of Metals. Ph.D. Thesis, University of Toledo, Toledo, OH.

Roder, H.M.; and Weber, L.A. 1972: ASRDI Oxygen Technology Survey, Vol. 1: Thermophysical Properties. NASA SP–3071.

Roth, E.M. 1964: Space-Cabin Atmospheres. Pt. I: Oxygen Toxicity, NASA SP–47, p. 13.

Schmidt, H.W.; and Forney, D.E. 1975: ASRDI Oxygen Technology Survey, Vol. 9: Oxygen Systems Engineering Review. NASA SP–3090.

Stoltzfus, J.; and Benz, F. 1984: Development of Methods and Procedures for Determining the Ignitability of Metals in Oxygen. Report TR 281 001 INT 1. NASA White Sands Test Facility, Las Cruces, NM.

Title 29, Pt. 1910, Sec. 104 — Code of Federal Regulations: Hazardous Materials, Oxygen.

Title 29, Pt. 1910, Sec. 252 — Code of Federal Regulations: Welding, Cutting, and Brazing. General requirements, Fire Prevention and Protection.

Title 40, Parts 260 to 265 — Code of Federal Regulations: Protection of Environment: Hazardous Waste Management

Title 49, Parts 100 to177 — Code of Federal Regulations: Hazardous Materials Regulations.

Williams, R.; Benz, F.; and McIlroy, K. 1988. Ignition of Steel Alloys by Impact of Low-Velocity Iron/Inert Particles in Gaseous Oxygen. Flammability and Sensitivity of Materials in Oxygen-Enriched Atmospheres. Vol. 3, pp. 72–84. ASTM STP 986. D.W. Schroll, ed. ASTM, Philadelphia.

APPENDIX A.—DEFINITIONS AND ACRONYMS

Adiabatic compression.—Compression of a gas in an adiabatic system. Since energy cannot be transferred to or from the surroundings in an adiabatic system, the compressional energy increases the energy (temperature) of the compressed gas.

American Society of Testing Materials (ASTM)

Authority Having Jurisdiction (AHJ)

Autogenous ignition.—The phenomenon in which a mixture of gases or vapors ignites spontaneously with no external ignition source. It is frequently called autoignition or spontaneous ignition.

Autoignition temperature.—The lowest temperature at which a fuel in contact with air or an oxidizer will self-heat to ignition without an external ignition source. The autoignition temperature for a monopropellant is the temperature at which it will self-heat to ignition in the absence of an oxidizer.

Blast wave.—A shock wave in air caused by the detonation of explosive material

Blast yield.—Energy released in an explosion. The amount of energy is inferred from measurements of the characteristics of blast waves generated by the explosion.

Burn velocity.—The propagation velocity of a flame through a flammable mixture. Burning velocities are absolute velocities measured relative to the velocity of the unburned gas; flame velocities are measured in laboratory coordinates and are not absolute.

Chemical Propulsion Information Agency (CPIA)

Combustion wave.—A zone of burning, propagating through a combustible medium, that is capable of initiating chemical reaction in the adjacent unburned combustible layers

Code of Federal Regulations (CFR)

Compressed Gas Association (CGA)

Critical diameter.—The minimum diameter required for a tube to produce a stable spherical detonation into an unconfined environment. This term is sometimes used by other authors to describe the minimum tube diameter for propagation of a flame or of a detonation confined in the tube.

Deflagration.—A rapid chemical reaction in which the output of heat is enough to enable the reaction to proceed and accelerate without input of heat from another source. Deflagration is a surface phenomenon in which the reaction products flow away from the unreacted material along the surface at subsonic velocity. The effect of a true deflagration under confinement is an explosion. Confinement of the reaction increases pressure, rate of reaction, and temperature and may cause transition into a detonation.

Detonation.—A violent chemical reaction of a chemical compound or mechanical mixture in which heat and pressure are emitted. A detonation is a reaction that proceeds through the reacted material toward the unreacted material at supersonic velocity. As a result of the chemical reaction, extremely high pressure is exerted on the surrounding medium, forming a propagating shock wave that originally is of supersonic velocity.

Detonation cells.—The cellular pattern left on a soot-coated plate by a detonation wave. The dimensions of a single cell (length and width) can be used to predict detonation limits and critical diameters.

Detonation limits.—The maximum and minimum concentrations of vapor, mist, or dust in air or oxygen at which stable detonations occur. The limits are controlled by the size and geometry of the environment as well as by the concentration of the fuel. Detonation limit is sometimes used as a synonym for explosive limit.

Detonation wave.—A shock wave that is sustained by the energy of a chemical reaction initiated by the temperature and pressure in the wave. Detonation waves propagate at supersonic velocities relative to the unreacted fluid.

Diffusion coefficient.—The mass of material diffusing across a unit area in unit time at a unit concentration gradient

Electrical arc/spark test.—Method of determining the susceptibility of metals to ignition in oxygen by using an electrical arc or spark. Arc energy input and oxygen pressure are the major variables.

Explosion.—The sudden production of a large quantity of gas or vapor, usually hot, from a smaller amount of a gas, vapor, liquid, or solid. An explosion may be viewed as a rapid equilibration of a high-pressure gas with the environment; the equilibration must be so fast that the energy contained in the high-pressure gas is dissipated as a shock wave. Depending on the rate of energy release, an explosion can be categorized as a deflagration, a detonation, or a pressure rupture.

Explosive limits.—The maximum and minimum concentrations of vapor, mist, or dust in air or oxygen at which explosions occur. The limits are controlled by the size and geometry of the environment as well as by the concentration of the fuel. Detonation limit is sometimes used as a synonym for explosive limit.

Explosive reaction.—A chemical reaction wherein any chemical compound or mechanical mixture, when ignited, undergoes a very rapid combustion or decomposition, releasing large volumes of highly heated gases that exert pressure on the surrounding medium; a mechanical reaction in which failure of the container causes the sudden release of pressure from within a pressure vessel

Explosive yield.—The amount of energy released in an explosion. Explosive yield is often expressed as a percent or fraction of the energy that would be released by the same mass of a standard highly explosive substance such as TNT.

Flammability limits.—The maximum and minimum concentrations of a fuel (gas or vapor) in an oxidizer (gas or vapor) at which flame propagation can occur

Free air or free gas (STP).—Air or gas measured at a temperature of 60 °F (15.6 °C) and a pressure of 14.7 psia (101.4 kPa).

Glenn Research Center (GRC)

Hazardous (classified) location.—A location where fire or explosion hazards may exist because of flammable gases or vapors, flammable liquids, combustible dust, or easily ignitable fibers or flyings

Ignitable mixture.—A mixture that can propagate a flame away from the source of ignition

Ignition energy.—The amount of energy needed to initiate flame propagation through a combustible mixture. The minimum ignition energy is the minimum energy required for the ignition of a particular flammable mixture at a specified temperature and pressure.

Ignition temperature.—The temperature required to ignite a substance by using an ignition source such as a spark or flame

Intrinsically safe system.—A circuit in which any spark or thermal effect is incapable of causing ignition of a mixture of flammable or combustible material in air under prescribed test conditions and which may be used in hazardous National Electric Code (NEC)-classified locations.

Lower explosive limit (LEL).—The minimum concentration of a combustible/ flammable gas or vapor in air (usually expressed in percent by volume at sea level) that will explode if an ignition source is present

Lower flammable limit (LFL).—The minimum concentration of a combustible/ flammable gas or vapor in air (usually expressed in percent by volume at sea level at temperatures up to 121 °C) that will ignite if an ignition source is present

NASA Aerospace Safety Research and Data Institute (ASRDI)

NASA Procedural Requirement (NPR)

NASA Policy Directive (NPD)

NASA Safety and Mission Assurance (SMA)

NASA Safety Standard (NSS)

NASA Safety Training Center (NSTC)

National Electric Code (NEC)

National Fire Protection Agency (NFPA)

Nondestructive examination (NDE)

Nonvolatile residue (NVR)

Office of Protective Services (PSO)

Plum Brook Station (PBS)

Pressure Vessels and Pressurized Systems (PV/S)

Safety and Health Division (SHeD)

Safety, Health and Environmental Training (SHET)

Shock wave.—A surface or sheet of discontinuity set up in a supersonic field of flow, through which the fluid undergoes a finite decrease in velocity accompanied by a marked increase in pressure, density, temperature, and entropy, as occurs in a supersonic flow about a body

Stoichiometric combustion.—The burning of fuel and oxidizer in the exact proportions required for a complete reaction to give a set of products

Unconfined vapor cloud explosion.—Explosion that results from a quantity of fuel having been released to the atmosphere as a vapor or aerosol, mixed with air, and then ignited by some source

Vapor explosion.—A shock wave produced by the sudden vaporization of a superheated liquid coming into contact with a cold liquid.

White Sands Test Facility (WSTF)

APPENDIX B.—TABLES

TABLE B.1.—SELECTED SAFETY-RELEVANT PHYSICAL PROPERTIES OF GASEOUS AND LIQUID OXYGEN
[From Roder and Weber 1972; CGA Pamphlet G 4, 1996; and CRC Handbook of Chemistry and Physics.]

Reference temperature, F [R] (K)	68°	[527.7°]	(293.15°)
Standard pressure (1 atm), psia (kPa abs)	14.69	(101.325)	
Density,(a) lb/ft^3 (kg/m^3)	0.0831	(1.33)	
Specific volume,(a) ft3/lb (m^3/kg)	12.03	(0.751)	
Specific heat,(a) Cp, Btu/lb-F (J/g-C)	0.220	(0.919)	
Cv, Btu/lb-F (J/g-C)	0.157	(0.68)	
Velocity of sound,(a) ft/sec (m/sec)	1070	(326)	
Critical density, lb/ft3 (kg/m^3)	27.2	(436.1)	
Critical pressure, psia (kPa abs)	731.4	(5043)	
Critical temperature, F [R] (K)	–181.43°	[278.3°]	(154.6°)

Vapor pressure at selected temperatures, psia (kPa)

268.6° R	588	(4052.0)	
259°	441	(3039.0)	
240°	294	(2026.5)	
216°	147	(1013.2)	
196°	73.5	(506.60	
175°	29.4	(202.64)	
162°	14.7	(1010.32)	
Boiling point at 1 atm, F [R] (K)	14.7	(101.32)	
Specific heat,(b) Cp, Btu/lb-R (J/g-K)	–297.3	[162.4]	(90.18)
Density,(b) lb/ft3 (kg/m^3	71.23	(1141)	
Cv, Btu/lb-R (J/g-K)	0.221	(0.93)	
Velocity of sound,(b) ft/sec (m/sec)	2963	(903)	
Heat of vaporization,(b) Btu/lb (J/g)	91.59	(213)	
Heat of fusion at triple point, Btu/lb (J/g)	5.98	(13.9)	
Triple point temperature, F [R] (K)	-361.8	[97.9]	(54.35)
Triple point pressure, psia (kPa)	0.022	(0.152)	

Notes:
At reference temperature and standard pressure (527.7 °R and 1 atm).
At 162.4° R and 1 atm.

TABLE B.2.—SOME RECOMMENDED MATERIALS FOR OXYGEN SERVICE[a]
[From Bond et al., 1983.]

Application	Low pressure[b]	High pressure[c]
Component bodies	Nickel alloy steel Stainless steel	Monel Inconel 718
Tubing and fittings	Copper Stainless steel Steel Aluminum Aluminum alloys	Monel Inconel 718
Internal parts	Stainless steel	Monel Inconel 718 Beryllium copper
Springs	Stainless steel	Beryllium copper Elgiloy Monel
Valve seats	Stainless steel	Gold or silver plated over Monel or Inconel 718
Valve balls	Stainless steel Tungsten carbide	Sapphire
Lubricants	Everlube 812 Microsel 100–1 and 200–1 Triolube 1175 Krytox 240AB and 240AC Braycote 3L–38RP	Batch/lot-tested Braycote 3L–38RP Batch/lot- tested Everlube 812 Krytox 240AC
O-seals and backup	TFE, Halon TFE Teflon Kel F Viton	Batch/lot-tested Viton Batch/lot-tested Teflon
Pressure vessels	Nickel steel Stainless steel Steel Aluminum alloys	Inconel 718

[a]This table lists materials for conservative design standards. Materials listed in the “Low pressure” column and other materials that are not listed may be suitable for more extreme environment oxygen service. Careful engineering analysis and rationale shall be used to select alternate materials.

[b]Nominally less than 1000 psi.

[c]Nominally greater than 1000 psi.

APPENDIX C.—FIRST AID FOR CONTACT WITH CRYOGENIC MATERIAL

(To Be Posted At Test Site)

Contact with liquid oxygen or its cold boiloff vapors can produce cryogenic burns (frostbite). Unprotected parts of the body should not be allowed to contact un-insulated pipes or vessels containing cryogenic fluids. The cold metal will cause the flesh to stick and tear. Treatment of frozen tissue requires medical supervision since incorrect first aid practices always aggravate the injury.

C.1 Exposure to Cryogenic Gases/Liquids

Cryogenic burns result when tissue comes into contact with cold gases, liquids, or their containers. Contact may result in skin chilling or true tissue freezing. Commonly, only small areas are involved, with injury to the outer layers of the skin.

Small quantities of cryogenic material may evaporate from the skin before actual freezing occurs. Such an injury typically produces a red area on the skin. More significant injury is caused by true freezing: the formation of crystals within and around the tissue cells. Frozen tissue always assumes a yellowish-white color, which persists until thawing occurs.

C.2 First Aid for Cryogen-Induced Injuries

Steps to prevent and emergency care for cryogen-induced injuries must be incorporated into safety standards and training programs for operations and emergency response. Personnel shall be knowledgeable about the risks of injury from cryogens.

Treatment of frozen tissue requires medical supervision since incorrect first aid practices always aggravate the injury. In the field, it is safest to do nothing other than cover the area, if possible, and to transport the injured person to a medical facility. Attempts to administer first aid for this condition will often be very harmful. Listed below are some important don’ts:

> ***NOTE:*** *Attempts to administer first aid for this condition will often be harmful. Here are some important don’ts:*

- Don’t remove frozen gloves, shoes, or clothing except in a slow, careful manner (skin may be pulled off inadvertently).
- Don’t massage the affected part.
- Don’t expose the affected part to temperatures exceeding 112 °F or temperatures lower than 100 °F.
- Don’t apply snow or ice to the affected area.
- Don’t use safety showers, eyewash fountains, or other sources of water because the water temperatures will almost certainly be incorrect and will aggravate the injury.
- Don’t apply ointments.

Although safety showers may be provided, they are exclusively for nonmedical purposes such as extinguishing fires or flushing acid. Safety showers should be tagged, “Not to be used for treatment of cryogen burns.”

APPENDIX D.—CLEANLINESS SPECIFICATION FOR GASEOUS/LIQUID OXYGEN SERVICE IN GLENN TEST FACILITY SYSTEMS

D.1 Scope of Specifications

This specification establishes the minimum requirements for system and component cleanliness for GRC test facility gaseous and liquid oxygen service. It reflects the requirements of KSC–C–123H, 1995; MSFC HDBK 527, Rev. F; JSC SN C 0005, Rev. A; and MSFC Spec 164B. It includes the acceptable minimum cleanliness, cleaning, packaging, and verification requirements.

Rigid procedures shall be followed in preparing, assembling, testing, and packaging components to assure cleanliness and to avoid the inherent danger of oxygen reacting with grease, oil, or other foreign matter. Any procedure not complying with this specification must be submitted to the Assurance Management Office, the area safety committee and the designated authority having jurisdiction (AHJ) for approval.

This specification does not preclude the supplier's responsibility for providing a product that meets the system performance requirements and acceptability for oxygen use. It shall be considered an integral part of the purchase agreement between the vendor and NASA GRC.

D.2 Requirements

D.2.1 Materials

All materials used shall have been previously determined to be compatible with oxygen and should be widely accepted throughout the aerospace industry. All materials shall be approved by the Glenn Assurance Management Office and/or the area safety committee.

D.2.2 Lubricants

Liquid oxygen is a powerful oxidizing agent, so a petroleum-based lubricant must not be used. Special lubricants, such as the fluorolubes or the perfluorocarbons that have been tested and found suitable for oxygen service, may be used. All lubricants shall be approved by the Glenn Assurance Management Office and/or the area safety committee.

D.2.3 Cleanliness

All component parts shall be free of burrs, chips, scale, slag, or foreign matter and shall be cleaned prior to assembly. Inspection for cleanliness shall consist of the following.

D.2.4 Visual Inspection

Visible contamination shall require recleaning of the surface. Discoloration due to welding will be permitted, providing no scale or rust is associated with the discoloration. Visual inspection aided by an ultraviolet light source (3200- to 3800-angstrom wavelength) shall show no evidence of fluorescence from contamination.

D.2.5 White Cloth Inspection

Surfaces shall be rubbed in two directions with a clean, lint-free white cloth. Any evidence of oil, rust, stain, scale, or foreign matter will be cause for rejection. The cloth may be examined under natural or ultraviolet light. Use of ultraviolet light (3200- to 3800-angstrom wavelength) shall show no evidence of fluorescence from contamination.

D.2.6 Solvent Rinse

Sufficient quantities of solvent rinse shall be used so as to yield 100 milliliters/square foot of internal surface area. The solvent rinse shall be performed by either sloshing or agitating the fluid around the inside surface of the components and straining it through a 5-micron (or finer) filter. Further instructions are found in ASTM MNL36, January 2000.

D.2.7 Assembly

The component parts shall be individually cleaned prior to assembly. Precautions shall be used during handling and assembly to preclude contamination of component parts. Final assembly and inspection shall be done in a laminar-airflow clean work area whenever possible.

D.2.8 Cleaning

Cleaning shall consist of the typical cleaning, rinsing, and drying procedures used throughout the aerospace industry:

1. Cleaning shall consist of a thorough flushing of all surfaces with aqueous detergent solutions.
2. Rinsing shall consist of a thorough rinsing and flushing with demineralized water, followed by rinsing and flushing with isopropyl alcohol.
3. Drying shall consist of blowing dry with filtered gaseous nitrogen or oil-free air.

D.2.9 Inspection

Inspection of cleaned components shall be performed by the solvent rinse method where possible. (This is generally done during the final cleaning stages and just prior to the drying operation.) The solvent shall be used at a rate of 100 milliliters per square foot of internal wetted surface area. (For all components having less than 1 square foot of internal wetted surface area, use 100 ml of solvent.) The solvent rinse shall be performed by either sloshing or agitating the fluid around the inside surface of the component to ensure dislodgment of particles. The rinse shall be poured through a filter sized to detect all particles greater than 100 microns. The assembled component, or any part thereof, shall be recleaned if it fails to pass the inspection(s).

The Glenn Project Assurance Office and/or area safety committee reserves the right to inspect the finished component for cleanliness.

D.2.10 Packaging

On finished components, seal all openings with appropriate blind flanges, plugs, or caps or securely tape polyethylene sheeting (at least 0.008-inch thick (0.20millimeter)) to prevent contamination, making sure the tape does not touch any cleaned surface. Components shall then be double packed and sealed with polyethylene (0.006-inch thick minimum (0.15-millimeter)) before they are put into a shipping container. Pad sharp edges before packaging to preclude puncturing the package. Exercise care in packaging to prevent shredded or abraded polyethylene material from becoming a contaminant.

D.2.11 Verification

Finished components shall be affixed with a tag, label, or stamp showing that they meet the requirements specified herein for oxygen services.

TABLE D.1.—GRC ACCEPTANCE CRITERIA BASED ON KSC–C–123 (LEVEL 300–A)

(a) Solid particles.

Particle size, microns	Maximum number per 100-ml sample (Millipore test)
<100	Unlimited
100 to 250	93
251 to 300	3
>300	0

(b) Fibers.

Fiber length (up to 25 μm diameter), microns	Maximum number of 100-ml sample (Millipore test)
0 to 500	20
501 to 1000	3
1001 to 1875	>1875 None

(c) Nonvolatile residue.

Maximum residue, mg/ft^2 1.0

(d) Hydrocarbon limit.

Method result	Result
Ultraviolet light	No fluorescence
Infrared spectrophotometer	5 ppm hydrocarbon

(e) Total solids and fibers.

25 mg/ft^2 (maximum)

D.3 Pressure Gauges and Transducers

Pressure gauges and transducers represent a cleaning challenge because of the small, inaccessible internal passages. In general, customized equipment for flushing is required (e.g., small-diameter tubing to flush Bourdon tubes). Cleaning, inspection, and packaging of pressure gauges and transducers shall conform to the requirements of this specification. The following table lists the current GRC cleaning specifications for oxygen service gauges and transducers.

TABLE D.2.—OXYGEN-CLEANING SPECIFICATIONS FOR PRESSURE GAUGES AND TRANSDUCERS

(a) Oxygen-clean certification of pressure gauges and transducers.

Hydrocarbon contamination level in solvent wash with IR scan method	< 5 ppm of hydrocarbon in a 50 cubic cm sample
Visual borescope	No scale, heavy rust, or particles

(b) Particles.

Particle size, microns	Maximum number per square foot
<100	Unlimited
100 to 250	1073
251 to 500	27
>500	0

(c) Fibers.

Fiber length, microns (up to 25 microns) diameter	Maximum number per square foot
0 to 500	20
501 to 1000	3
1000 to 1875	1
>1875	0

APPENDIX E.—PROCEDURES FOR GASEOUS OXYGEN TUBE TRAILERS

E.1 Operational Requirements

E.1.1 NOTE

1. Only qualified/certified operators shall perform transfers. Operator certification is described in Section 6.1.
2. While in storage or transport, a properly secured tube trailer should be maintained with all valves in the closed position and with the tailpiece and sample port capped. Additionally, the trailer shall be grounded, wheels chocked, and doors securely shut.
3. A two-man buddy system shall always be in place as specified in Section 6.2.1 of this chapter.

E.1.2 CAUTION

1. All materials shall be compatible with oxygen use as described in Section 6.5.
2. Rapid pressurization must be avoided to prevent potential ignition and fire.
3. Oxygen cleanliness levels must always be maintained. A minor oversight in maintaining cleanliness at the trailer connection point can destroy safe cleanliness levels of the entire oxygen system.
4. All interconnecting components used for fill, purging, or withdrawal must be free of hydrocarbon and particulate contamination (this includes purge gases).

E.1.3 Tube Trailer Fill

1. Ground the trailer at the connector located on the bumper.
2. Secure the trailer doors with latches provided.
3. Chock/block trailer wheels. Also place a cone or sign at the front of the trailer to indicate that the trailer is connected to the manifold.
4. Put up the required barricades and signs.
5. Open the gauge isolation valve to ensure that the supply manifold has maintained pressure and is leak free. (If the manifold has leaked to atmospheric pressure, cease operations and contact the cryogenic maintenance COTR for proper evaluation and repair.)
6. Connect the approved transfer hose to the fill tailpiece and supply-side fitting. (Maintain cleanliness of the caps.)
7. Secure the transfer hose restraining cables to the eyelets provided.
8. Purge the transfer hose.
9. Leak-check the hose connections.
10. Open all tube isolation valves (equalize pressure slowly).
11. After the transfer hose has been purged and checked, stand clear of the transfer hose and slowly open the trailer manual fill valve.
12. Ensure that all personnel stand clear of the transfer hose; then slowly, completely open the main gas supply isolation valve (from source) to fill the trailer.

E.1.4 Post-Fill Shutdown

1. Close the main gas supply isolation valve (from source) to begin the shutdown and disconnect operations.
2. Close the trailer manual fill valve.
3. Open the transfer hose vent/purge valve and bleed to atmospheric condition (cap fitting).
4. Disconnect the transfer hose restraining cable.

5. Remove the transfer hose from the trailer and cap the hose and tailpiece ports. NOTE: If a sample is required, follow the checklist procedures. (Draw the sample gas from the sample panel only.)
6. Close all tube isolation valves (transfer is complete).
7. Remove the ground, and close the doors prior to moving the trailer.
8. Remove the barricades, warning signs, and wheel chocks.

E.1.5 Tube Trailer Withdrawal

1. Ground the trailer at the connector located on the bumper.
2. Secure the trailer doors with the latches provided.
3. Chock/block the trailer wheels. ALSO place a cone or sign at the front of the trailer to indicate that the trailer is connected to the manifold.
4. Put up the required barricades and signs.
5. Open the gauge isolation valve to ensure that the supply manifold has maintained pressure and is leak free. (If the manifold has leaked to atmospheric pressure, cease operations and contact the cryogenic maintenance COTR for proper evaluation.)
6. Connect the approved transfer hose to the trailer withdrawal tailpiece and receiving station.
7. Secure the transfer hose restraining cables to the eyelets provided.
8. Open all trailer tube isolation valves (equalize pressure slowly).
9. Leak-check the trailer manifold piping.
10. Open the receiving station main isolation valve.
11. Pressure-purge the transfer hose assembly and maintain 40 to 100 psi in the transfer line.
12. Leak-check the transfer hose connections.
13. Slightly open the manual withdrawal valve on the trailer (valve will expose a 1/8-inch bleed port when open a half turn).
14. Withdraw personnel from the area of transfer hoses.
15. Open the trailer emergency shutoff valve from the remote location.
16. Allow the oxygen receiving station pressure to reach the trailer pressure; then close the trailer emergency shutoff valve.
17. Fully open the trailer manual withdrawal valve (after a three-quarter turn, the valve will begin exposing the full seat area).
18. Open the trailer emergency shutoff valve from the remote location to withdraw oxygen for use.

E.1.6 Post-Withdrawal Shutdown

1. Close the trailer emergency shutoff valve from the remote location.
2. Close the receiving station main isolation valve.
3. Vent and purge the transfer hose to atmospheric pressure as specified in the area of use.
4. Close the trailer manual withdrawal valve.
5. Disconnect the transfer hose restraining cable.
6. Remove the transfer hose from the trailer and cap the hose and tailpiece ports. Keep the hose and caps oxygen-clean.
7. Close all tube isolation valves. (The transfer is secure.)

8. Remove the ground and close the doors prior to moving the trailer.
9. Remove the barricades, warning signs, and wheel chocks.

Contents

1.0 PURPOSE 4
2.0 APPLICABILITY 4
3.0 BACKGROUND 4
3.1 Typical Hydrogen Hazards 4
3.1.1 Deflagration and Detonation 4
3.1.2 Leakage, Diffusion, and Buoyancy 4
3.2 Hazards of Handling and Storage 5
3.2.1 Storage Tank Failures 5
3.2.2 Unloading and Transfer Leaks 5
3.2.3 Collisions During Transportation 5
3.3 Hazardous Properties of Gaseous Hydrogen 5
3.3.1 Undetectability 5
3.3.2 Flammability 5
3.3.3 Autoignition 5
3.3.4 Ignition at Low Energy Input 6
3.3.5 Lack of Flame Color 6
3.4 Hazardous Properties of Liquid Hydrogen 6
3.4.1 Low Boiling Point 6
3.4.2 Ice Formation 6
3.4.3 Continuous Evaporation 6
3.4.4 Trapped liquid 6
3.4.5 Cold Gas Leak 6
3.5 Hazardous Properties of Slush Hydrogen 6
3.5.1 Low Vapor Pressure 6
3.5.2 Volume Expansion on Melting and Warming 6
3.5.3 Thermal Acoustic Oscillations 7
3.5.4 Solid Particles in Flow Streams 7
3.5.5 Slush Hydrogen System Air Intrusion 7
3.6 Selected Safety-Relevant Properties of Hydrogen 7
3.6.1 Ortho- and Parahydrogen 7
3.6.2 Gaseous (Normal) Hydrogen 7
4.0 POLICY 8
4.1 Policy Documents 8
4.2 Adopted Regulations 9
5.0 RESPONSIBILITIES 9
5.1 Owner/Operators of Hydrogen Systems 9
5.2 Supervisors of Operating Personnel and System Designers 9
5.3 Owner/Operators of Pressurized Hydrogen Systems 9
6.0 REQUIREMENTS (driving reference(s) for requirement) 9
6.1 Training (*ANSI/AIAA G–095–2004, 29 CFR 1910.103, NPR 8715.3 Chapter 7*) 9
6.1.1 Applicable Requirements 10
6.1.2 Recommended Training Classes 10
6.2 General Approach to Hydrogen Safety (*ANSI/AIAA G–095–2004*) 10
6.2.1 Safety Programs 10
6.2.2 Inherent Safety 11
6.2.3 Fail-Safe Design 11
6.2.4 Automatic Safety Devices 11
6.2.5 Alarm Warning and Shutdown Devices 11
6.2.6 Hydrogen Operations According to Formal Procedures 11
6.2.7 Personnel Training 11
6.2.8 Operator Certification 11
6.2.9 Safety Review 11
6.2.10 First Aid 11

6.3 Protective Equipment (*ANSI/AIAA G–095–2004*) 12
6.3.1 Hand and Foot Protection 12
6.3.2 Head, Face, and Body Protection 12
6.3.3 Impermeable Clothing 12
6.3.4 Low-Static and Fire-Resistant Clothing 12
6.3.5 Hydrogen Vapors on Clothing 12
6.3.6 Storage of Protective Equipment 12
6.4 Smoking Regulations (*NFPA 55*) 12
6.5 Facility and System Design and Operation (*ANSI/AIAA G–095–2004*, ASME and CGA Codes and Standards) 12
6.5.1 Safety Approval Policy 12
6.5.2 Safety Review Requirements 12
6.5.3 Detection of Combustibles 13
6.5.4 Buildings 13
6.5.5 Test Chambers 14
6.5.6 Control Rooms 15
6.5.7 Hydrogen Vessels and Storage Systems 16
6.5.8 Overpressure Protection of Storage Vessels and Systems 19
6.5.9 Protective Barricades, Dikes, and Impoundment Areas 19
6.5.10 Piping Systems: General Requirements 20
6.5.11 System Testing and Recertification 20
6.5.12 Contamination 20
6.5.13 Safe Disposal of Hydrogen 22
6.5.14 Slush Hydrogen Systems 24
6.6 Materials (*ANSI/AIAA G–095–2004*) 24
6.6.1 Code Requirements 24
6.6.2 Materials Selection 24
6.6.3 Hydrogen Embrittlement 25
6.7 Ignition Sources (*ANSI/AIAA G–095–2004*) 25
6.7.1 Concept 25
6.7.2 Potential Ignition Sources 26
6.7.3 Limiting Electrical Ignition Sources 26
6.7.4 Other Ignition Sources 28
6.8 Detection of Hydrogen Leaks and Fire (*ANSI/AIAA G–095–2004*) 29
6.8.1 Hydrogen Leak Detection Systems 29
6.8.2 Fire Detectors 30
6.9 Standard Operating Procedures (*ANSI/AIAA G–095–2004*) 30
6.9.1 Policy 30
6.9.2 Requirements for Personnel 31
6.9.3 Startup Examination and Inspection 31
6.9.4 Signals and Identification 32
6.9.5 Checklists 32
6.9.6 Allowable Hydrogen Leakage at Test Installations 32
6.9.7 Clean Systems (see also Appendix C) 32
6.9.8 Purging 33
6.9.9 Gaseous Hydrogen Tube Trailers and Cylinders (*CGA G–5, 49 CFR Chapter 1, Part 177*) 34
6.9.10 Storage, Transfer, and Test Operations 34
6.9.11 Cold-Shock Conditioning 35
6.9.12 Liquid Hydrogen Tank Cooldown 35
6.9.13 Optional Liquid Nitrogen Precool 35
6.9.14 Liquid Hydrogen Systems 36
6.9.15 Removal of Dewars and Gas Trailers From Test Facilities 38
6.9.16 Substitution of Dewars and Change of Content 38
6.9.17 Slush Hydrogen 38
6.10 Protection of Personnel and Equipment (*ANSI/AIAA G–095–2004*) 38

6.10.1 Protective Clothing 38
6.10.2 First Aid for Cryogen-Induced Injuries 39
6.10.3 Access to Hazardous Areas 39
6.10.4 Protective Shelters and Control Rooms 40
6.10.5 Safeguards in Inert Environments 40
6.11 Blast Effects and Separation Distances (*NFPA 55, ANSI/AIAA G–095–2004, NSS 1740.12*) 40
6.11.1 Quantity-Distance Concept 40
6.11.2 Quantity-Distance Policy 41
6.11.3 Quantity Distances for Liquid and Slush Hydrogen 41
6.11.4 Mandated Quantity Distances for Gaseous Hydrogen 42
6.11.5 Fragmentation 42
6.11.6 Need for Barricades 42
6.12 Emergency Procedures (*ANSI/AIAA G–095–2004*) 42
6.12.1 Basic Guidelines 42
6.12.2 Controlling Leaks 43
6.12.3 Hydrogen Gas Leaks From Cylinders 43
6.12.4 Slush Hydrogen Emergencies 43
6.12.5 Transportation Emergencies 43
6.12.6 Assistance in Emergencies 46
6.12.7 Firefighting Techniques 46
6.12.8 Protection from Exposure to Fire 47
6.13 Transportation of Hydrogen (*ANSI/AIAA G–095–2004*) 47
6.13.1 Codes and Regulations 48
6.13.2 Loading Area Requirements 48
6.13.3 Mandatory Transport Regulations 49
7.0 RECORDS 49
7.1 NASA C–Forms (all maintained by the PSO) 49
8.0 REFERENCES 50
8.1 Tables Referenced in Text (see given reference document) 50
8.2 Other 50
APPENDIX A.—DEFINITIONS AND ACRONYMS 53
APPENDIX B.—Recommended Procedures for Gaseous Hydrogen Tube Trailers 56
B.1 Operational Requirements 56
B.2 Tube Trailer Fill 56
B.3 Post-Fill Shutdown 56
B.4 Tube Trailer Withdrawal 57
B.5 Post-Withdrawal Shutdown 57
APPENDIX C.—Cleaning Hydrogen Service Systems 58
C.1 Contamination Control 58
C.2 Recommended Procedure 58
C.3 Cleaning Filters 58
APPENDIX D.—First aid for Contact with Cryogenic Material 60
D.1 Exposure to Cryogenic Gases/Liquids 60
D.2 Treatment of Frozen Body Tissue 60

List of Tables

Table 3.1.—Properties of Liquid (para) hydrogen 7
Table 3.1.—Concluded. 8
Table 3.2.—Properties of gaseous (normal) hydrogen 8

Chapter 6—Hydrogen

***NOTE:** The current version of this chapter is maintained and approved by the Safety, Health and Environmental division (SHED). The last revision date of this chapter was June 2010. The current version is located on the Glenn Research Center(GRC) intranet at http://smad-ext.grc.nasa.gov/shed/pub/gsm/gsm-manual.pdf. Approved by Chief of Safety, Health and Environmental Division.*

1.0 PURPOSE

The Glenn Safety Manual chapter on hydrogen is written to provide requirements and to serve as a guide for the safe design and use of hydrogen systems at the Glenn Research Center (GRC). A summary of operational hazards, hydrogen safety and emergency procedures, and operating procedures for gaseous hydrogen tube trailers is also given. These hydrogen standards and practices are for minimum safety requirements only. More extensive safety precautions should be employed where possible.

2.0 APPLICABILITY

This chapter is applicable to all civil servant and contractor employees assigned to GRC and purchasing, designing, operating, maintaining, or certifying any fixed or portable hydrogen system or container. These guidelines shall govern all aspects of hydrogen handling and usage at GRC and Plum Brook Station (PBS). They shall in no event be considered to be relaxing any occupational safety or health standard imposed by regulation. Section **4.2** presents a list of references that contain rules and procedures to which adherence is mandatory.

3.0 BACKGROUND

3.1 Typical Hydrogen Hazards

The major hazards associated with hydrogen are fires and explosions and, in the event of contact with the liquid or cold boiloff vapor, frostbite and burns.

3.1.1 Deflagration and Detonation

Hydrogen gas can burn in two modes: as a deflagration or as a detonation.

In a deflagration, the ordinary mode of burning, the flame travels through the mixture at subsonic speeds. This happens, for instance, when an unconfined cloud of hydrogen-air mixture is ignited by a small ignition source. Under these circumstances, the flame will travel at a rate anywhere from 10 to several hundred feet per second. The rapid expansion of hot gases produces a pressure wave. Witnesses hear a noise, often a very loud noise, and may say that an explosion occurred. The pressure wave from rapid unconfined burning may be strong enough to damage nearby structures and cause injuries to personnel.

In a detonation, the flame and the shock wave travel through the mixture at supersonic speeds. The pressure ratio across a detonation wave is considerably greater than that in a deflagration. The hazards to personnel, structures, and nearby facilities are greater in a detonation.

A detonation will often build up from an ordinary deflagration that has been ignited in a confined or partly confined mixture. This can occur even when ignition is caused by a minimal energy source. It takes a powerful ignition source to produce detonation in an unconfined hydrogen-air mixture. However, a confined mixture of hydrogen with air or oxygen can be detonated by a relatively small ignition source.

The pressure ratio across a detonation wave in a hydrogen-air mixture is about 20, as indicated when the wave passes a detector mounted flush in a confining wall. (A pressure ratio of 20 means 300 psi if the mixture is at atmospheric pressure.) When the wave strikes an obstacle, the pressure ratio seen by the obstacle is between 40 and 60. Even larger pressure ratios occur in the region where a deflagration builds into a detonation.

3.1.2 Leakage, Diffusion, and Buoyancy

These hazards result from the difficulty in containing hydrogen. Hydrogen diffuses extensively, and when a liquid spill or large gas release occurs, a combustible mixture can form over a considerable distance from the spill location.

3.1.2.1 Leakage

Hydrogen, in both the liquid and gaseous states, is particularly subject to leakage because of its low viscosity and low molecular weight (leakage is inversely proportional to viscosity). Because of its low viscosity alone, the leakage rate of liquid hydrogen is roughly 100 times that of JP–4 fuel, 50 times that of water, and 10 times that of liquid nitrogen.

3.1.2.2 Diffusion and Buoyancy

The diffusion rate of hydrogen in air is approximately 3.8 times faster than air in air. In a 500-gallon, ground-spill demonstration experiment, liquid hydrogen diffused to a nonexplosive mixture after about 1 minute. Air turbulence increases the rate of hydrogen diffusion. The buoyancy of hydrogen tends to limit the spread of combustible mixtures resulting from a hydrogen release. Although hydrogen vapor is heavier than air at the temperatures existing after evaporation from a liquid spill, at temperatures above –418 °F the hydrogen vapor becomes lighter than air, thereby making the cloud buoyant. (see ANSI/AIAA G–095–2004, Guide to Safety of Hydrogen and Hydrogen Systems, for more information.)

3.2 Hazards of Handling and Storage

Safety is improved when designers and operational personnel are aware of accidents that are repeatedly associated with the handling and use of hydrogen. The release of liquid or gaseous hydrogen has resulted in fires and explosions. Such hazards are associated with the formation and movement of a flammable gas-air cloud upon hydrogen release. The dispersion of the cloud is affected by wind speed and wind direction.

3.2.1 Storage Tank Failures

Tank failures resulting in the release of hydrogen may be started by material failures, excessive pressures caused by heat leaks, or failures of the pressure-relief systems. Hydrogen embrittlement is a major material failure threat (see Section **6.6.3**).

3.2.2 Unloading and Transfer Leaks

Deformed seals or gaskets, valve misalignment, or failures of flanges or equipment usually cause unloading and transfer leaks. A leak may cause further failures of construction materials, including vacuum-jacketed lines.

3.2.3 Collisions During Transportation

Damage to hydrogen transportation systems has caused spills and leaks that resulted in fires and explosions.

3.3 Hazardous Properties of Gaseous Hydrogen

3.3.1 Undetectability

Hydrogen gas is colorless and odorless and not detectable by human senses.

3.3.2 Flammability

Mixtures of hydrogen with air, oxygen, or other oxidizers are highly flammable over a wide range of compositions. The flammability limits, in volume percent of hydrogen, define the range over which fuel vapors ignite when exposed to an ignition source of sufficient energy.

The flammable mixture may be diluted with either of its constituents until it is no longer flammable. Two limits of flammability are defined: the lower limit, the minimum amount of combustible gas that makes a mixture flammable; and the upper limit, the maximum amount of combustible gas in a flammable mixture.

The flammability limits based on the volume percent of hydrogen in air (at 14.7 psia) are 4.0 and 75.0. The flammability limits based on the volume percent of hydrogen in oxygen (at 14.7 psia) are 4.0 and 94.0. Reducing the pressure below 1 atmosphere tends to narrow the flammability range by raising the lower limit and lowering the upper limit. No mixture of hydrogen and air has been found to be flammable below 1.1 psia.

3.3.3 Autoignition

Temperatures of about 1050 °F are usually required for mixtures of hydrogen with air or oxygen to autoignite at 14.7 psia; however, at pressures from 3 to 8 psia, autoignitions have occurred near hot hydrogen and flash fire. The primary hazard of using hot hydrogen (1050 to 6000 °F) is that a large leak at temperatures above the autoignition

temperature will almost always result in a flash fire. Other safety criteria are the same as those for ambient-temperature gaseous hydrogen. System construction materials must be suitable for use at the elevated temperatures.

3.3.4 Ignition at Low Energy Input

Hydrogen-air mixtures can ignite with very low energy input, one-tenth of that required for igniting a gasoline-air mixture. For reference, an invisible spark or a static spark from a person can cause ignition.

3.3.5 Lack of Flame Color

Hydrogen-oxygen and hydrogen-pure air flames are colorless. (Any visible flame is caused by impurities.) Colorless hydrogen flames can cause severe burns.

3.4 Hazardous Properties of Liquid Hydrogen

All the hazards that exist when gaseous hydrogen is present exist with liquid hydrogen because of the ease with which the liquid evaporates. However, there are additional hazards due to the properties of liquid hydrogen.

3.4.1 Low Boiling Point

Liquid hydrogen has a normal boiling point of –423 °F at sea-level pressure. Any liquid hydrogen splashed on the skin or in the eyes can cause serious “burns” by frostbite.

Storage tanks and other containers should be kept under positive pressure to prevent air from seeping in. Condensed and solidified atmospheric air, or trace air accumulated in manufacturing, contaminates liquid hydrogen, thereby forming an unstable mixture. This mixture may detonate with effects similar to those produced by trinitrotoluene (TNT) and other highly explosive materials.

3.4.2 Ice Formation

Vents and valves from storage vessels and Dewars may be frozen closed by accumulations of ice formed from moisture in the air. Excessive pressure may then rupture the container and release a potentially hazardous quantity of hydrogen.

3.4.3 Continuous Evaporation

The continuous evaporation of liquid hydrogen in a vessel generates gaseous hydrogen, which must be vented to a safe location.

3.4.4 Trapped liquid

If liquid hydrogen is confined, for example, in a pipe between two valves, it will eventually warm to the surroundings and cause a significant pressure rise. The pressure of a trapped volume of liquid hydrogen at 14.7 psia, when warmed to 70 °F, rises to 28 000 psia.

3.4.5 Cold Gas Leak

At temperatures above –418.6 °F, hydrogen gas is lighter than air at standard temperature and pressure (STP) and tends to rise. At temperatures just after evaporation from the liquid, the vapor is heavier than air and will remain close to the ground until the gas temperature rises.

3.5 Hazardous Properties of Slush Hydrogen

All the hazards that exist with gaseous and liquid hydrogen exist with slush hydrogen. The combustibility properties of slush hydrogen should not present any greater hazard than those of liquid hydrogen, but there are additional hazards with slush hydrogen.

3.5.1 Low Vapor Pressure

The greatest hazard with slush hydrogen systems is the intrusion of air into the hydrogen storage container. Because the vapor pressure of slush hydrogen mixtures is only 1.02 psia, there is always a concern that atmospheric air will leak into the slush system.

3.5.2 Volume Expansion on Melting and Warming

When the solid hydrogen in slush hydrogen melts and the colder liquid hydrogen warms up to temperatures above the triple point, the volume of the hydrogen increases significantly. A mixture of 50-percent solid (by mass) slush

expands more than 15 percent in reaching the density of liquid hydrogen at 36 °R and 1 atm. Sufficient ullage must be available to accommodate the expansion caused by heat input to a slush hydrogen storage system over the expected storage time.

3.5.3 Thermal Acoustic Oscillations

Thermal acoustic oscillations can be caused by the entrance of the slush mixture into a warmer duct (typically into a gauge line and/or instrumentation tube). The subsequent warming and expansion forces the fluid back into the tank where cooling occurs. The cooling lowers the fluid pressure and causes a resurgence of the slush mixture into the tube. Repetition of this process drives an undamped pressure oscillation that pumps thermal energy into the bulk mixture.

3.5.4 Solid Particles in Flow Streams

Slush hydrogen piping systems shall be designed to prevent solid particles from accumulating and then blocking valve seats, instrumentation ports, and relief valve openings.

3.5.5 Slush Hydrogen System Air Intrusion

During operation, slush hydrogen systems shall be monitored continuously for the intrusion of air from the atmosphere. A detection warning system design and emergency operation plan shall be presented to the area safety committee.

3.6 Selected Safety-Relevant Properties of Hydrogen

3.6.1 Ortho- and Parahydrogen

The hydrogen molecule exists in two forms distinguished by the relative rotation of the nuclear spin of the individual atoms in the molecule. Molecules with spins in the same direction (parallel) are called orthohydrogen; those with spins in the opposite direction (antiparallel) are called parahydrogen. The two forms have slightly different physical properties but are chemically equivalent (see Table **3.1**).

3.6.2 Gaseous (Normal) Hydrogen

At or above room temperature, “normal” hydrogen is an equilibrium mixture of 75 percent orthohydrogen and 25 percent parahydrogen. However, at cryogenic temperatures, an equilibrium mixture contains predominately the paraform. The liquefaction of normal hydrogen produces a liquid containing about 75 percent orthohydrogen, which slowly converts to a parahydrogen with the release of some heat. Catalysts are used to accelerate their conversion in production facilities, which produce almost pure parahydrogen in the liquid form (see Table **3.2**).

TABLE 3.1.—PROPERTIES OF LIQUID (PARA) HYDROGEN

Boiling Point at 1 atm	–423.3 °F/36.7 °R	20.27 K
Vapor pressure		
–402 °F/57.7 °R	163.0 psia	1124.3 kPa
–420 °F/39.7 °R	23.7 psia	163.5 kPa
–423 °F/36.5 °R	14.7 psia	101.4 kPa
–433 °F/26.7 °R	1.9 psia	13.1 kPa
Density		
36.49 °R and 1 atm	4.42 lb/ft^3	70.79 kg/m^3
Critical density	1.99 lb/ft^3	31.49 g/m^3
Critical pressure	187.5 psia	1292.7 kPa
Critical temperature	–400.3 °F/59.4 °R	32.98 K
Triple point temperature	–434.8 °F/24.84 °R	13.80 K
Specific heat	Cp = 2.32 Btu/lb-R	Cp = 9.69 J/g-K
	Cv = 1.37 Btu/lb-R	Cv = 5.74 J/g-K
Heat of vaporization	191.7 Btu/lb	445.59 J/g
Heat of fusion	25.1 Btu/lb	58.23 J/g

TABLE 3.1.—CONCLUDED.

Liquid		
Temperature	36.49 °R	20.27 K
Vapor pressure	14.69 psia	101.28 kPa
Density	4.42 lbm/ft^3	70.79 kg/m^3
Liquid at triple point		
Temperature	24.84 °R	13.8 K
Vapor pressure	1.02 psia	7.04 kPa
Density	4.81 lbm/ft^3	77.04 kg/m^3
Slush—50 percent mass solid		
Temperature	24.84 °R	13.8 K
Vapor pressure	1.02 psia	7.04 kPa
Density	5.09 lbm/ft^3	81.50 kg/m^3
Slush—50 percent volume solid		
Temperature	24.84 °R	13.8 K
Vapor pressure	1.02 psia	7.04 kPa
Density	5.11 lbm/ft^3	81.77 kg/m^3
Solid at triple point		
Temperature	24.84 °R	13.8 K
Vapor pressure	1.02 psia	7.04 kPa
Density	5.40 lbm/ft^3	86.50 kg/m^3

TABLE 3.2.—PROPERTIES OF GASEOUS (NORMAL) HYDROGEN

Reference temperature	68 °F/528 °R	293 K
Standard pressure (1 atm) psia	14.69 psia	101.325 kPa (abs)
Density (at 528 °R and 1 atm)	0.00523 lb/ft^3	83.7 g/m^3
Specific volume (at 528 °R and 1 atm)	191.4 ft^3/lb	0.0119 m^3/g
Specific heat	Cp = 3.425 Btu/lb-R	Cp = 14.33 J/g-k
	Cv = 2.419 Btu/lb-R	Cv = 10.12 J/g-k
Velocity of sound	4246 ft/sec	1294 m/sec
	Low = 51596 Btu/lb	Low = 119.93 kJ/g
Heat of combustion	High = 61031 Btu/lb	High = 141.86 kJ/g
Flammability limits		
Hydrogen-air mixture	Lower = 4.0 vol%	Upper = 75 vol%
Hydrogen-oxygen mixture	Lower = 4.0 vol%	Upper = 95 vol%
Explosive limits		
Hydrogen-air mixture	Lower = 18.3 vol%	Upper = 59 vol%
Hydrogen-oxygen mixture	Lower = 15.0 vol%	Upper = 90 vol%
Minimum spark ignition energy at 1 atm		
In air	1.9×10^{-8} Btu	0.02 mJ
In Oxygen	6.6×10^{-9} Btu	0.007 mJ

A more complete listing of the thermophysical properties of hydrogen is available in NASA SP–3089 (McCarty 1975) and NBS–NM–168 (McCarty, et al. 1981). Although both of these references cover a broad range of properties over a wide range of pressures and temperatures, Chapter 3 of the latter provides an in-depth discussion of hydrogen combustibility properties that should be useful to a hydrogen system designer or user.

4.0 POLICY

4.1 Policy Documents

The authority for the hydrogen safety program at GRC comes from the following:

- NASA Procedural Requirement (NPR) **8715.3**, NASA General Safety Program Requirements
- NASA Policy Directive (NPD) **8710.5**, NASA Safety Policy for Pressure Vessels and Pressurized Systems
- NASA STD 8719.17, NASA Requirements for Ground Based Pressure Vessels and Pressurized Systems (PV/S)
- Glenn Safety Manual, Chapter **1**, Safety and Health Management System
- Code of Federal Regulations, 29 CFR, 1910.103, Hydrogen
- NASA Safety Standard (NSS) 1740.12, Safety Standard for Explosives, Propellants, and Pyrotechnics

4.2 Adopted Regulations

This chapter is based on the best information available. It draws heavily on material from the American National Standards Institute/American Institute of Aeronautics and Astronautics (ANSI/AIAA) G–95–2004, Guide to Safety of Hydrogen and Hydrogen Systems. Much additional information is taken from National Fire Protection Association (NFPA) and Compressed Gas Association (CGA) standards. Experience gained over the past 40 years with hydrogen systems at GRC also contributed much to the development of the new safety chapter.

The following documents or portions thereof are referenced within this chapter as mandated regulations and shall be considered as part of the requirements of this chapter; however, whenever there is a conflict between information presented in a reference and information contained in this chapter, the chapter information shall govern.

- NFPA 55, 2005, Standard for the Storage, Use, and Handling of Compressed Gases and Cryogenic Fluids in Portable and Stationary Containers, Cylinders, and Tanks
- Compressed Gas Association (CGA) Pamphlet G–5, Hydrogen
- ANSI/AIAA G–095–2004, Guide to Safety of Hydrogen and Hydrogen Systems, provides an outstanding source of additional practical safety, design, and handling information on the use of hydrogen in gas, liquid, and slush forms. Many useful references are provided. Much valuable guideline information used in this chapter was extracted from the original drafts of NSS/FP 1740.11
- American Society of Mechanical Engineers (ASME) B31.12, Hydrogen Piping and Pipelines

5.0 RESPONSIBILITIES

5.1 Owner/Operators of Hydrogen Systems

NASA employees and contractors responsible for the design, operation, or maintenance of hydrogen systems at GRC, will meet the requirements of this chapter as well as the documents listed in Section **4.2** of this chapter. These requirements include system design, material selection, pressure testing, operational procedures, hydrogen storage, emergency procedures, personnel protection, training, and certification.

5.2 Supervisors of Operating Personnel and System Designers

Supervisors shall ensure that personnel directly involved with the design, installation and operation of hydrogen systems meet minimum training requirements appropriate to the task. For systems containing liquid hydrogen or larger volumes of compressed hydrogen gas, such as tube trailers, the training requirements of Section **6.1** apply.

5.3 Owner/Operators of Pressurized Hydrogen Systems

See the Glenn Safety Manual Chapter **7**, Pressure System Safety, for responsibilities related to pressurized systems.

6.0 REQUIREMENTS (driving reference(s) for requirement)

6.1 Training (*ANSI/AIAA G–095–2004, 29 CFR 1910.103, NPR 8715.3 Chapter 7*)

Personnel who handle/use liquid and gaseous hydrogen or who design equipment for hydrogen systems must become familiar with its physical, chemical, and hazardous properties. In addition, the following requirements apply.

6.1.1 Applicable Requirements

- Personnel must know which materials are most compatible with hydrogen, what the cleanliness requirements of hydrogen systems are, how to recognize system limitations, and how to respond to failures. Operators shall be familiar with procedures for handling spills and with the actions to be taken in case of fire.
- Training should include detailed safety programs for recognizing human capabilities and limitations. Instruction on the use and care of protective equipment and clothing shall be provided. Regularly scheduled fire drills and safety meetings shall be instituted.
- Personnel must constantly reexamine procedures, hazards analyses, and equipment to be sure safety has not been compromised by changes in test methods, overfamiliarity with the work, equipment deterioration, or stresses due to abnormal conditions. Hazards analyses shall be updated as changes are identified.
- Trained supervision of all potentially hazardous activities involving liquid hydrogen is essential. Everyone working with these materials must abide by the first aid procedures described in Appendix **D**. Personnel shall be instructed to call 911 (at GRC and at PBS) for all emergency aid.

Qualified Operators Shall Demonstrate

- Knowledge of the nature and properties of hydrogen in both the liquid and gaseous phases
- Knowledge of the materials that are compatible with both liquid and gaseous hydrogen
- Knowledge of proper equipment and proficiency in its operation
- Familiarity with the operation manuals of the operating equipment
- Proficiency in the use of protective equipment and clothing
- Proficiency in self-aid, first aid, and proper emergency actions
- Recognition of normal operations and of symptoms that indicate a deviation from such operations
- Conscientiousness in following instructions and checklist requirements

6.1.2 Recommended Training Classes

The following NASA Safety Training Center Classes (NSTC) are recommended for operators of hydrogen systems at GRC. Not all classes may be applicable to all personnel.

Class number	Class name
SMA–SAFE–NSTC–0317	Safety and Mission Assurance, Safety in High Pressure Operations
SMA–SAFE–NSTC–0318	Safety and Mission Assurance, Compressed Gas Trailer Safety
SMA–SAFE–NSTC–0056	Safety and Mission Assurance, Flex Hose Safety
SMA–SAFE–NSTC–0037	Safety and Mission Assurance, Hydrogen Safety
SMA–SAFE–NSTC–0054	Safety and Mission Assurance, Safety in Hydrogen System Operations
SMA–SAFE–NSTC–0313	Safety and Mission Assurance, Cryogenics Safety

6.2 General Approach to Hydrogen Safety (*ANSI/AIAA G–095–2004*)

The following are discussed in further detail in Sections **6.3** through **6.13**.

6.2.1 Safety Programs

Safety programs shall be directed towards minimizing the possibilities of accidents, reducing the severity of any accidents that occur, and establishing controls and safeguards for identified hazards.

6.2.2 Inherent Safety

Hydrogen systems and operations shall be designed to be inherently devoid of hazards by observing the cardinal axioms of hydrogen safety: adequate ventilation, leak prevention, and appropriate elimination of ignition sources.

6.2.3 Fail-Safe Design

Redundant safety features shall be incorporated in the system design to prevent a hazardous condition when a component fails. In such incidents, the system controls should rapidly shut down the equipment and allow only minimal leakage.

6.2.4 Automatic Safety Devices

Leak detection and ventilation shall be automatically controlled. Manual controls of pressure and flow rate shall be constrained by automatic limiting devices. Automation may be utilized in standardized test operations.

6.2.5 Alarm Warning and Shutdown Devices

Warning systems shall be installed to monitor those parameters of the storage, handling, and use of hydrogen that may endanger personnel and cause property damage. The warning and shutdown systems shall include sensors to detect abnormal conditions, measure malfunctions, indicate incipient failures, and introduce automatic shutdown when warranted. Data transmission systems for alarm and warning systems shall have sufficient redundancy to prevent any single-point failure from disabling the entire system.

6.2.6 Hydrogen Operations According to Formal Procedures

Personnel involved in design and operations are required to carefully adhere to the safety standards for hydrogen handling and usage, and they must comply with regulatory codes.

6.2.7 Personnel Training

Personnel who handle hydrogen or who design equipment for hydrogen systems must become familiar with the physical and chemical properties of hydrogen as well as with the specific hazardous properties of liquid and gaseous hydrogen. (Also see Section **6.3.3**, Training)

Training should include detailed safety programs for recognizing human capabilities and limitations. Personnel must constantly re-examine procedures and equipment to be sure safety has not been compromised by changes in test methods, equipment deterioration, overfamiliarity with the work, or work-related stress.

6.2.8 Operator Certification

Operators shall be certified as “qualified” for handling liquid and gaseous hydrogen and “qualified” in the emergency procedures for handling leaks and spills in accordance with Section **6.9.2**, Requirements for Personnel. Operators must be kept informed of changes in facility operations and safety procedures.

6.2.9 Safety Review

Activities involving hydrogen use shall be permitted and be subject to an independent, third-party area safety committee review. Safety reviews shall be conducted in such typical areas of concern as effects of fluid properties, training, escape and rescue, fire detection, and firefighting. The safety reviews shall include review of the design, operating procedures, and in-service inspections. As part of obtaining a permit, hazards analyses shall be performed to identify conditions that may cause injury, death, or property damage.

6.2.10 First Aid

(See Section **6.10** for first aid for cryogen-induced injuries.)

Call 911 for emergency first aid at GRC or PBS. From a cell phone, at GRC call 216–433–8888 and at PBS, call 419–621–3222.

Contact with liquid hydrogen or its cold boiloff vapors can produce cryogenic burns (frostbite). Unprotected parts of the body should not be allowed to contact noninsulated pipes or vessels containing cryogenic fluids. The cold metal will cause the flesh to stick and tear.

Treatment of truly frozen tissue requires professional medical supervision because incorrect first aid practices almost always aggravate the injury.

6.3 Protective Equipment (*ANSI/AIAA G–095–2004*)

NOTE: *For further information, see the Glenn Safety Manual Chapter* ***15****, Personal Protective Equipment.*

Protective clothing and equipment shall be included in personnel protective measures.

6.3.1 Hand and Foot Protection

Gloves for work near cryogenic systems must be of good insulating quality. They should be designed for quick removal in case liquid hydrogen gets inside. Because of the danger of a cryogenic splash, shoes should have high tops, and pant legs should be worn outside and over the shoe tops. Leather shoes are recommended.

6.3.2 Head, Face, and Body Protection

Personnel handling liquid hydrogen shall wear splash protection. A face shield or a hood with a face shield shall be worn. If liquid hydrogen is being handled in an open system, an apron of impermeable material should be worn.

6.3.3 Impermeable Clothing

Impermeable clothing with good insulating properties is effective in protecting the wearer from burns due to cryogenic splashes or spills. Impermeable clothing and gloves are not designed for immersion into cryogens.

6.3.4 Low-Static and Fire-Resistant Clothing

Specialized clothing is available to reduce the chance of ignition due to static charge and for protection against burns.

6.3.5 Hydrogen Vapors on Clothing

Any clothing that has been splashed or soaked with hydrogen vapors shall be removed and shall not be used until it is completely free of the gas.

Prior to entering a hydrogen test area, precautions must be taken to assure that the environmental level of hydrogen has stabilized to a safe and acceptable value below the lower explosive limit.

6.3.6 Storage of Protective Equipment

Facilities should be available near the hydrogen use or storage area for the proper storage, repair, and decontamination of protective clothing and equipment. Safety equipment shall be checked periodically to make sure it is operational.

6.4 Smoking Regulations (*NFPA 55*)

Smoking and open flames are prohibited within 25 feet of a gaseous hydrogen system and within 50 feet of a liquid hydrogen system.

6.5 Facility and System Design and Operation (*ANSI/AIAA G–095–2004,* ASME and CGA Codes and Standards)

6.5.1 Safety Approval Policy

The safety of hydrogen storage, handling, and use in systems is enhanced when the facility plans, equipment designs, materials, and cleaning specifications are reviewed and approved before construction begins. Before hydrogen facilities, equipment, and systems are constructed, fabricated, and installed, the design shall be reviewed and approved by SHED and the area safety committee.

Hydrogen facilities, equipment, and systems that are or may need to be electrically classified as hazardous locations shall obtain formal approval from SHED. Documentation that details the design of hazardous locations must be submitted to SHED for review prior to installation, fabrication, or construction. Approval will be documented by memo to the requestor with a copy filed in the SHED office and a copy sent to the area safety committee. For guidelines on Hazardous Classified Locations see Chapter **8** of the Glenn Safety Manual.

6.5.2 Safety Review Requirements

NOTE: *For hydrogen systems in quantities of 10,000 pounds or more, onsite in one location, it is required to abide by the directives of 29 CFR 1910.119, Process Safety Management of highly hazardous chemicals.*

6.5.2.1 Analysis of Hazards

The Safety Permit Request shall include a hazards or failure mode analysis identifying conditions that may cause death, injury, or damage to the facility and surrounding property.

6.5.2.2 Assessment of Final Designs

Reviews of the final drawings, designs, structures, and flow and containment systems shall include a safety assessment to identify potential system hazards and areas of compliance required by local, State, and Federal agencies.

6.5.2.3 Evaluation of Operational Procedures

Operational procedures, along with instrumentation and control systems, shall be evaluated for their capacity to provide the required safety. It may be necessary to develop special procedures to counter hazardous conditions. Analysis or certification testing should verify equipment performance. The area or Process Systems safety committee must review and approve the special procedures and verifications.

6.5.2.4 Training and Certification of Operators

Operators shall be adequately trained and certified prior to operations. Plans for hydrogen safety training shall be presented (see Section **6.1**).

6.5.2.5 Development of Emergency Procedures

The safety of personnel at and near hydrogen systems shall be carefully reviewed, and emergency procedures shall be developed in the earliest planning and design stages. Advance planning for a variety of emergencies, such as fires and explosions, should be undertaken. The first priority is to reduce any risk to life.

6.5.3 Detection of Combustibles

Hydrogen detectors, where possible, shall be placed above possible leak points. The use of gathering hoods around the detectors is recommended. The hydrogen detection system must be compatible with systems for fire detection and suppression. Verification that the detection units shall not be or become ignition sources is extremely critical. Details are provided in Section **6.8**.

Well-placed, reliable hydrogen detectors are imperative for a safe operating installation. Detection of liquid hydrogen leaks by observation alone is not adequate. Although a cloud of frozen air and moisture may be visible, such a cloud is not a reliable indicator of the presence of hydrogen.

The number and distribution of detection points and the time required to shut off the hydrogen at its source should be based on factors such as estimated leakage rates, ventilation, and room volume. In addition, the detection signal should actuate warning alarms that should automatically effect shutoff whenever practicable and send an alarm to emergency dispatch at a designated percentage of the lower explosive limit (usually 20 percent).

Hydrogen detection systems shall be field calibrated at least every 6 months. A record of calibrations shall be maintained for each facility.

6.5.4 Buildings

6.5.4.1 Type of Structure

In general, hydrogen should be stored, transferred, and handled outdoors where leaks are diffused and more easily diluted to noncombustible mixtures. However, if protection from the weather is required, the type of structure should be selected in the following order of preference:

1. Roof without peaks; no sides (weather shelter or canopy)
2. Well-ventilated roof; removable sides
3. Well-ventilated “expendable” building
4. Well-ventilated permanent building

The walls and roof should be lightly fastened and designed to relieve at a maximum internal pressure of 25 pounds per square foot without collapse of the structure. Doors shall be hinged to swing outward in an explosion. Any walls or partitions should be continuous from floor to ceiling and securely anchored. At least one wall shall be an exterior wall, and the room shall not open to other parts of the building.

Rooms and test cells with the potential to contain hydrogen shall be heated only by steam, hot water, or other indirect, passive means. Circulation fans shall have totally enclosed, nonspark-producing induction motors, thermostats shall have nonspark-producing contacts (enclosed) suitable for Class I, Division 2, Group B use.

6.5.4.2 Construction Materials

The building shall be constructed of noncombustible materials on a substantial frame. The windowpanes shall be shatterproof glass or plastic in frames. In addition, floors, walls, and ceilings should be designed and installed to limit the generation and accumulation of static electricity and shall have a fire-resistance rating of at least 2 hours.

6.5.4.3 Electrical Equipment Selection and Installation

Electrical equipment shall, at a minimum, be installed to conform to the National Electric Code (NEC) requirements (NFPA 70) for Class I, Division 2, Group B. Special considerations shall be given to the selection of wire sizes, types, bonding techniques to prevent arcing, and mechanical damage protection.

Materials for electrical and electronic equipment should be selected in accordance with established specifications such as KSC STD E–0002, Hazard Proofing of Electrically Energized Equipment.

Installing electrical equipment in purged boxes, using special types of non-arcing electric motors, and locking out specific electrical circuits when hydrogen is present are alternative ways of meeting code requirements.

Electrical wiring and equipment located within 3 feet of a point where hydrogen line connections are regularly made and disconnected, or within 3 feet of a point where hydrogen is vented shall be Class I, Division 1, Group B. Electrical wiring and equipment located from 3 to 25 feet of a point where connections are regularly made and disconnected, or within 25 feet of a liquid hydrogen storage container, shall be Class I, Division 2, Group B. See Section **6.7.3** for more information and special exceptions.

6.5.5 Test Chambers

6.5.5.1 Ventilation

Any test cell or chamber containing hydrogen system components must be adequately ventilated whenever hydrogen is in the system. The quantities of air, or other means of making the system inert, shall be sufficient to avoid an explosion and should be based on the largest credible volume of the leakage gases relative to the room volume and the time available for instituting corrective measures.

Adequate ventilation must be ensured before hydrogen enters the system, and such ventilation must remain adequate until the system is purged. Do not shut off ventilation as a function of an emergency shutdown procedure. The test cell control system should include interlocking features to prevent operation without adequate ventilation.

Safety-relief devices of containers in buildings should be vented to the outdoors at an appropriate elevation that will ensure area safety and where there are no obstructions (see Section **6.5.13**). Vents must be located at least 50 feet from air intakes (OSHA standard, 29 CFR 1910.103). The discharge from outlet openings must be directed to a safe location (see Section **6.5.7**).

Explosion venting must be provided in exterior walls or in the roof. The venting should be not less than 1 square foot per 30 cubic feet of room volume.

Hydrogen diffuses rapidly if not confined. At room temperature, hydrogen is the lightest of all gases, only one-fourteenth as heavy as air; consequently, it rises. Therefore, inverted pockets will trap hydrogen gas. Avoid covers, suspended ceilings, or places where pockets may form and trap hydrogen gas.

Forced air ventilators shall be powered only by devices approved for hydrogen service. Electric motors and drive belts used to open vents, operate valves, or operate fans must be designated as Class I, Division 1 or 2, Group B.

Adequate ventilation to the outdoors must be provided. Inlet openings should be located in exterior walls. Outlet openings should be located at the high point of the room in exterior walls or the roof. Inlet and outlet openings shall have a minimum total area of 1 square foot per 1000 cubic feet of room volume.

6.5.5.2 Inert Atmosphere

Test cells or chambers that cannot be ventilated sufficiently to cope with potential hazards may be rendered nonhazardous by providing an inert atmosphere of nitrogen, carbon dioxide, helium, steam, or other nonreactive gas. In such cases it is desirable to have the chamber pressure higher than atmospheric pressure to avoid inward leakage of air. The design shall prevent any possibility of asphyxiation of personnel in adjacent areas or of personnel who accidentally enter the cell.

6.5.5.3 Partial Vacuum

Oxidants may be restricted in a test chamber by using a partial vacuum. The vacuum should be sufficient to limit the pressure of an explosion to a value that the tank can withstand. In such a case, the chamber must withstand 20 times the maximum operating pressure, except for heads, baffles, and other obstructions in a pipe run, which must withstand 60 times the maximum operating pressure. Because the reaction time during a detonation is so short, ultimate stress values may be used.

6.5.5.4 Secondary Fire Protection Systems

Strong consideration should be given to the installation of deluge systems along the top of storage areas. These deluge systems should have both manual and automatic actuation capabilities.

Fire-extinguishing systems should be used to protect manifold piping, relief vents, and transfer pump facilities from secondary fires. In addition, rooms containing cryogenic and flammable fluids should be provided with secondary fire and explosion protection. These rooms should have a continuously operating exhaust system with a flow of about 1 cubic foot/minute/square foot (0.3 cubic meter/minute/square meter) of floor area. If a flammable gas is detected at 25 percent of the lower flammability limit, the exhaust capacity should be doubled.

6.5.6 Control Rooms

A blast-proof control room remote from the hydrogen test site is advisable. In any case, control rooms should provide a means to observe (directly or by closed-circuit television) the hydrogen systems. In control rooms where hydrogen use in adjacent test areas could create a hazardous situation, the following must be considered:

6.5.6.1 Openings to Test Area

Any control room window opening into a test cell where excessive pressures or ricocheting fragments could be present must be considered a hazard. If a window is required, it shall be made as small as practicable and shall be of bulletproof glass or the equivalent.

If wall openings and such cannot be sealed, any hydrogen-containing cell with openings to other rooms should be maintained at a negative pressure relative to the communicating rooms.

6.5.6.2 Piping Systems

Hydrogen piping must not enter the control room. Any hydraulic or pneumatic control valve must have a double barrier between the hydrogen line and the control room. Manual isolation valves should be used for greater protection. Conduits shall be sealed at the test rig end and be designed to prevent purge gases from entering an occupied area.

Existing gaseous hydrogen transmission lines buried underground in the control areas shall be pneumatically tested per ASME B31.3 periodically and after periods of nonuse. Buried lines are not allowed for new facilities.

6.5.6.3 Ventilation

Inlet openings for room ventilation should be located near the floor level in exterior walls only. Outlet openings should be located at the high point of the control room in the exterior walls or the roof. Both the inlet and outlet vent openings must have a minimum total area of 1 square foot per 1000 cubic feet of room volume.

Title 29 CFR 1910.103 (b)(2)(ii)(d)(5) and Table H–2 prohibit locating hydrogen systems within 50 feet of intakes for ventilation or for air-conditioning equipment and air compressors. Compliance with this standard is required.

There are stricter limits for liquid hydrogen; for all quantities, the minimum distance to air compressor intakes, air-conditioning inlets, or ventilating equipment shall be 75 feet measured horizontally.

Particular attention should be paid to the ventilation or air source for control rooms that, in an emergency, may be enveloped in hydrogen gas or the products of combustion. Undetected hydrogen is responsible for a large number of fires and explosions.

To ensure that inert gases be prevented from escaping into control room areas

1. Do not pipe inert gases into tightly sealed shelters if there is a possibility of accidental release and suffocation from lack of oxygen
2. Seal purged electrical gear and conduits from personnel shelters
3. Make sure that instrumentation and gas sampling systems cannot provide a leak path for inert gases to the control area

6.5.7 Hydrogen Vessels and Storage Systems

6.5.7.1 General Requirements

The following are design requirements for the safe storage and use of hydrogen.

All hydrogen vessels or containers other than piping shall comply with the following:

1. Storage or stationary containers shall be designed, constructed, and tested in accordance with appropriate requirements of Section VIII of the ASME Boiler and Pressure Vessel Code for unfired pressure vessels.
2. All pressure vessels and systems shall be designed in accordance with the requirements in NPD 8710.5, NASA Safety Policy for Pressure Vessels and Pressurized Systems.
3. Portable containers shall be designed, constructed, tested and maintained in accordance with U.S. Department of Transportation (DOT) specifications and regulations (49 CFR).

All piping and systems shall conform to Section **6.5.10**.

Fixed-storage vessels and propellant trailers shall be located in accordance with the appropriate quantity-distance tables as specified in Section **6.11**.

Amounts of hydrogen in test rigs and special vessels inside buildings should be kept at a minimum as approved by the area safety committee (see Section **6.11**).

All hydrogen vessels shall be protected from potential sources of shrapnel. Barricades should be installed near the test area to protect the Dewar from blast fragments or from disintegrating high-speed machinery. Housings for high-rotational-speed equipment may be designed as shrapnel shields between the rig and the vessel.

Combustible materials shall be allowed in the hazardous areas only when they are required for test purposes. Otherwise, the onsite materials restrictions of NFPA 55 shall be followed.

Piping that carries hydrogen to the test vessels from the Dewars, trailers, and storage vessels should be installed above ground.

1. Hydrogen lines for new construction shall be installed above grade or in open trenches covered with grating.
2. Lines crossing under roadways shall be installed in concrete channels covered with an open grating.
3. Lines carrying liquid hydrogen should be insulated to prevent the condensation of atmospheric air.

Hydrogen transport Dewars and trailers shall be kept outdoors and located so that hydrogen cannot leak into any building.

Hydrogen transport trailer parking areas shall be barricaded and have warning signs posted whenever a loaded hydrogen gas trailer or mobile Dewar is present. Warning signs are required and shall state "Gas (or Liquefied) Hydrogen Flammable Gas No Smoking or Open Flame."

Adequate lighting should be provided for nighttime transfer operations. The electrical wiring and equipment shall comply with established code requirements as specified in Section **6.7.4**.

Vessels shall be tagged and coded per ASME code.

Facility file records of tests on vessels, piping, and components shall be maintained as prescribed by the Glenn Pressure Systems Office certification procedures.

6.5.7.2 Fixed-Storage Systems for Liquid Hydrogen

Surfaces exposed to the cryogen shall be constructed of materials that do not tend toward low-temperature embrittlement. Generally, face-centered-cubic metals and alloys such as aluminum, copper, nickel, and austenitic stainless steels are used. The outer wall or vacuum jacket may be fabricated from mild steels (see Section **6.6**).

The tank outlet and inlet markings should designate whether the working fluid is vapor or liquid. The hazard potential of opening the system will differ significantly for pressurized vapors and liquids. Wherever possible, avoid storing liquid hydrogen in containers with bottom openings, thereby preventing an uncontrollable leak path if a valve or connector should fail.

Insulation shall be designed to have a vapor-tight seal in the outer jacket or covering to prevent air condensation and oxygen enrichment within the insulation. Condensed air in the insulation system may expand explosively as it reverts to a gas when the liquid hydrogen is emptied from the tanks or pipes.

The roadways and surfaces of areas below hydrogen piping from which liquid air may drop shall be constructed of noncombustible materials such as concrete.

6.5.7.3 Mobile Storage Systems for Liquid Hydrogen

The design of mobile storage systems shall conform to the applicable specifications herein and to DOT Hazardous Materials regulations listed in Title 49, CFR, Parts 100 to 185. In addition, dual-rupture disks shall be required on trailers used for NASA liquid hydrogen operations.

6.5.7.4 Fixed and Mobile Storage Systems for Gaseous Hydrogen

Large volumes of gaseous hydrogen shall be stored outdoors in mobile or fixed cylinders. Design guidelines for these systems are as follows:

1. Use recommended materials as listed in Section **6.6**.
2. Do not make unrelieved penetrations to the sidewalls. If a pressure gauge is needed, consider entry through the forged heads.
3. Include a passageway for regular visual inspection in larger diameter vessels.
4. Do not use T–1 steel or cast iron.

Gas tube trailers shall have physically specific connecting fittings to prevent cross connection to the incorrect gas manifold. In addition to the manually operated main shutoff valves, these gas tube trailers should be equipped with remotely operated, normally closed, safety shutoff valves that require maintained power to remain open. They shall automatically return to fully close upon the removal of the control power. The valve cabinets should be well ventilated, and the trailer valve cabinet doors should be fully opened when in service.

Common gas facilities for both fuels and oxidants are not recommended. If common facilities are absolutely necessary, however, the installation must have proper purging procedures, blocking valves, venting systems, and most importantly, personnel technically trained in gas handling. Use of common gas facilities for both fuels and oxidants will require a locally granted waiver.

Fixed-storage vessels shall be located in accordance with the approved gaseous hydrogen quantity-distance tables (see Section **6.11**).

6.5.7.5 Vessel Valves

Valves and other components subjected to liquid hydrogen or cold gas flows shall be suitable for cryogenic service. All liquid hydrogen vessels and mobile Dewars shall be equipped with automatic shutoff valves. Manually operated valves may be used under the following conditions:

1. The loading operations and valves are attended by personnel using the buddy system, if this procedure has been approved by the area safety committee
2. The pressure of the Dewar does not exceed its normally designed operating pressure.
3. Vessels used as components of a test facility have remote-operating fail-safe shutoff valves with manual override to be used if the power fails.
4. For protection against the hazards associated with ruptures, rupture disks or relief valves are installed in all enclosures that contain liquid or that can trap liquids or cold vapors.

6.5.7.6 Vessel Supports for Mobile Dewars

The design and construction of supports for inner vessels, as well as for piping systems, should meet structural and thermal operational requirements.

For over-the-road trailers (tank motor vehicles,) all supports to inner vessels and to load-bearing outer shells should be attached by pads of materials similar to that of the inner vessel or outer shell, respectively, and by load rings or bosses designed to distribute the loads.

Trailers shall be provided with at least one rear bumper designed to protect the tank and piping in the event of a rear-end collision and to keep any part of another vehicle from striking the tank. The design should allow the force of a rear-end collision to be transmitted directly to the chassis of the vehicle. See NFPA 385 for other information on tank motor vehicles for flammable and combustible liquids.

6.5.7.7 Transfer Connections

Connectors must be keyed, sized, or located so that they cannot be cross-connected, thereby minimizing the possibility of connecting incompatible gaseous fluids or pressure levels. The connectors and fittings to be disconnected during operations should have tethered end plates, caps, plugs, or covers to protect the system from contamination or damage when it is not in use.

6.5.7.8 Liquid Hydrogen Connections

Vessels shall be connected to rigidly mounted test facility piping with supported and anchored flexible metal hose that is insulated for low-temperature service at the desired pressure. Other requirements for liquid hydrogen connections follow:

1. Recommendations for flexible hoses include a maximum allowable slack of about 5 percent of the total length, per 29 CFR 1910.103. Flexible hoses pressurized to greater than 165 psia shall be restrained at intervals not to exceed 6 feet and should have an approved restraint device such as the Kellems hose containment grips attached across each union or hose splice and at each end of the hose. The restraint devices should be secured to an object of adequate strength to restrain the hose if it breaks.
2. Sharp bends and twists should be avoided in the routing of flexible hose. A minimum of 5 times the outside diameter of the hose is considered acceptable as a bend radius.
3. The pressure range of the transfer equipment should be rated equal to or greater than the tanker design pressure. Flexible hose delivering a fluid at greater than 165 psia should be secured at both ends.
4. If condensation or frost appears on the external surface of the vacuum-jacketed hose during use, the jacket vacuum should be checked. The hose should be removed from service and repaired if the vacuum is above 100 torr.
5. Gasket materials used shall be suitable for this cryogenic service. Loose-fiber gasket material that can be readily fretted should not be used since the loose particles may contaminate the system. Properly sized gaskets shall be used.

4. O-rings and O-ring grooves shall be matched properly for the design service conditions. (Reference: Parker Handbook, Chart A5–2)

6.5.7.9 Gaseous Hydrogen Connections

Gaseous hydrogen connections from over-the-road tube trailers to facility supply systems shall conform to the specific safety design and material requirements specified by the GRC Facilities Division. General requirements are as follows:

1. Piping, tubing, and fittings shall be suitable for hydrogen service at the pressures and temperatures involved. Preferably, welding should make the joints in piping and tubing.
2. Flexure installations 6 feet long or longer that are to be used at a pressure above 165 psia shall be designed with a restraint on both the hose and the adjacent structure at 6 feet intervals and at each end to prevent whiplash in the event of a burst.

6.5.7.10 Vent Systems

All Dewars and storage and flow systems shall be equipped with unobstructed vent systems designed to dispose of hydrogen safely and to prevent the entry and accumulation of atmospheric precipitation. (see Section **6.5.5** for information on ventilation and Section **6.5.13** for vent systems design.) In addition, note the following:

1. Over-the-road Dewar vent systems shall be connected to a building hydrogen vent system when the Dewar is parked near a building (assuming proper vent system design per NFPA, etc.).
2. Gas or liquid trapped in vessels or transfer lines by emergency shutdown conditions shall be released or vented in a safe manner.
3. Cabinets and housings containing hydrogen control or operating equipment shall be adequately ventilated or purged.

6.5.8 Overpressure Protection of Storage Vessels and Systems

6.5.8.1 General Requirements

Safety devices (safety relief valves and/or rupture disks) shall be installed on tanks, lines, and component systems to prevent damage by overpressure. Relief devices and the installation of such, shall meet the requirements of ASME code Section VIII, Pressure Vessels, and B31.12, Hydrogen Piping and Pipelines. Reference the American Petroleum Institute Standards and Recommended Practices, RP 520 Part 1 and Part 2, and RP 521. Also reference the Compressed Gas Association Standard S–1.3. These standards meet the ASME codes and provide additional guidance.

6.5.9 Protective Barricades, Dikes, and Impoundment Areas

6.5.9.1 Purpose of Barricade

Barricades serve two purposes: to protect uncontrolled areas from the effects of a storage vessel rupture and to protect the storage vessel from the hazards of adjacent or nearby operations. Barricades are often needed in hydrogen storage areas to shield personnel, storage vessels, and adjoining areas from fragments if a rupture should occur where adequate separation distance is not available.

Barricades are mainly effective against fragments and only marginally effective in reducing overpressures at extended distances from the barricade. They should be located adjacent to the expected fragment source and in a direct line-of-sight between it and the facility to be protected.

If this is not possible, a barricade may be placed adjacent to the facility to be protected and in a direct line-of-sight between it and the expected fragment source.

Since pump facilities are usually required at hydrogen storage and use facilities, barricades shall be included in the design to provide protection against pump failures that could yield shrapnel. (See Section **6.11.6** for more information.)

6.5.9.2 Types of Barricades

The most common types of barricades are earthworks (mounds) and earthworks behind retaining walls (single revetted barricades). A mound is an elevation of naturally sloped dirt with a crest at least 3 feet wide. Single revetted barricades are mounds modified by a retaining wall on the side facing the potential hazard source.

6.5.9.3 Barricade Design

The proper height and length of a barricade shall be determined by line-of-sight considerations. Barricades, when required, must block the line-of-sight between any part of equipment from which fragments can originate and any part of the protected items. Protection of a public roadway shall assume a 12-foot high vehicle on the road.

Barricades must not completely confine escaped hydrogen, or detonation rather than simple burning might result. One-cubic-meter, liquid hydrogen spill tests conducted inside an open-ended (U-shaped) bunker without a roof produced detonation of the hydrogen-air mixture. Explosive limits of hydrogen in air are 18.3 to 59 percent by volume (Strehlow and Baker 1975; and Cloyd and Murphy 1965).

6.5.9.4 Confinement of Liquid and Vapor

A rapid liquid hydrogen spill (e.g., from the rupture of a storage vessel) results in a ground-level flammable cloud for a brief period. The quick change from a liquid to a vapor and the thermal instability of the cloud cause the hydrogen vapors to mix quickly with air, disperse to nonflammable concentrations, warm up, and become buoyant.

To control the travel of liquid and vapor due to tankage or piping spills, the facility should include impoundment areas and shields for diverting spills. The loading areas and the terrain below transfer piping should be graded toward an impoundment area, and the surfaces within these areas should be cleaned of flammable materials. Crushed stone in the impoundment area can provide added surface area for liquid hydrogen dissipation.

Planned installations should eliminate possible confining spaces created by the equipment, tankage, and piping. Flames in and around a collection of pipes or structures can create turbulence that causes a deflagration to evolve into a detonation, even in the absence of gross confinement.

Where it is necessary to locate liquid hydrogen containers on ground that is level with or lower than adjacent storage containers for flammable liquids or liquid oxygen, suitable protective means should be employed (such as dikes, curbs, and sloped areas) to prevent accumulation of other liquids within 50 feet of the liquid hydrogen containers (NFPA 55, 8.12.2.5.4.1).

No sewer drains shall be located in an area where a liquid hydrogen spill could occur.

6.5.10 Piping Systems: General Requirements

- All pressure, vacuum, and vent piping for both gaseous and liquid hydrogen systems shall conform to NASA STD 8719.17 as well to the ASME, B31.12, Hydrogen Piping and Pipelines.
- Hydrogen systems shall also conform to the special requirements of NFPA 55, 2005, Standard for the Storage, Use, and Handling of Compressed Gases and Cryogenic Fluids in Portable and Stationary Containers, Cylinders, and Tanks. Also reference CGA G–5.4, Standard for Hydrogen Piping Systems at Consumer Locations; and AIAA G–095–2004, Guide to Safety of Hydrogen and Hydrogen Systems.

6.5.11 System Testing and Recertification

Plans for system testing and recertification must be developed during the system design process. See Chapter **7** of this manual for requirements.

6.5.12 Contamination

Contamination must be prevented. The storage and piping systems, including system components, shall be designed and installed to allow for cleaning of the hydrogen system and for effective maintenance of a clean system. See Appendix **C** of this chapter for more information.

6.5.12.1 Filters

Filter placement should ensure effective collection of impurities in the system and accessibility for cleaning. The following are other guidelines for filter design:

1. Filter elements should be made of noncalendered woven wire mesh.
2. Sintered metal elements are not suitable because metal tends to spall and get into the system.
3. As a general rule, the filter element should retain 100 percent of the particles greater than 0.0059 inches (150 micrometers) in diameter. Some systems, however, may require more stringent standards.

6.5.12.2 Interconnected Systems

The passages in interconnected systems must be arranged so that cleaning or draining procedures can be developed to make sure that all piping, including dead-end passages and possible traps, is adequately cleaned.

6.5.12.3 Pressure Levels

For interconnected systems operating at different pressure levels, adequate means shall be provided to prevent damage to the lower pressure system and its components. Spool pieces, nonstandard elbows, or tees are typically used to isolate the high- and low-pressure systems. Block and bleed valves and/or blind flanges may be required.

6.5.12.4 Protection From Contamination by Other Fluids

Pressure-regulating valves, shutoff valves, and check valves do not adequately protect low-pressure systems connected to high-pressure systems. The low-pressure system must therefore have pressure-relief valves that are sized to handle the maximum high-pressure system flow. Discharge must be vented to an appropriate location (see Section **6.5.13**).

If the pressure differences in the systems cannot be managed by relief valves to prevent leakage and if the hydrogen system is not in use, the hydrogen supply shall be disconnected and capped. Other measures may be necessary or useful in preventing contamination:

1. Relief valves and burst disks are required for the protection of third piping systems supplied through valves from either the high- or low-pressure system.
2. A double block and bleed valve design may help prevent system contamination by other fluids.
3. Check valves shall not be used when bubble-free tightness is required; they can develop leaks during service. Two check valves in series have been found to be unreliable. In some cases, a single check valve has been more leak proof because the larger pressure drop closes the check valve more tightly.
4. Leaking check valves in interconnected systems can contaminate bottled gases, thereby jeopardizing the safety of laboratory operations. Suppliers of bottled gases specifically prohibit contaminating gases in their bottles. Check valves may, however, be used when system contamination is not important and where bottle pressures are not permitted to fall within 40 psig of the contaminating pressure. A safe pressure margin must be maintained.
5. A check valve may be used in the vent line to limit air influx.

6.5.12.5 Explosion Hazards

Explosion hazards in interconnected systems are caused by hydrogen leakage from one system into another. The design should recognize that leakage through valves is always a possibility; therefore

1. Over pressurization safety systems shall be installed for protection.
2. The system shall be designed so that interconnected components can be separated and capped.

Protection from contamination by oxygen, air, or nitrogen: Contamination can occur with interconnected systems (e.g., nitrogen purge system connected to hydrogen systems). Check valves shall not be relied on to prevent contamination. Localized concentrations of solid oxygen particles can become detonable in liquid hydrogen; therefore eliminate oxidants from the hydrogen system and observe the following precautions:

1. Store liquid hydrogen under pressure (4 to 25 psig) to reduce the amount of external contaminants entering the system.

2. Keep the pressurizing hydrogen gas at least 99.6 percent pure. Know the levels of impurities, especially oxygen, to ensure that the hydrogen gas is a satisfactory pressurant.
3. Keep all gas and liquid hydrogen transfer and handling equipment clean, dry, and purged.
4. Do not recirculate hydrogen if dangerous contamination cannot be prevented with reasonable certainty.

If contamination should occur, see Section **6.9.14** for decontamination procedures.

6.5.13 Safe Disposal of Hydrogen

Hydrogen shall be disposed of by atmospheric venting of unburned hydrogen or by using a suitable approved burning system.

6.5.13.1 Vent Stacks

Hydrogen systems and components must be equipped with venting systems that are satisfactory for normal operating requirements and that are protected against explosions. The vent stacks should be designed to keep air out of the stack and be placed to avoid contaminating the air intakes leading into nearby buildings.

6.5.13.2 Vent Stack Quantities

At GRC, the guideline for the steady-state quantity of unburned hydrogen from a single roof vent should generally be limited to 0.25 pounds/second, released at least 15 feet above a roof peak. Multiple roof vents may be used at spacing of 15 feet and at locations across the prevailing wind. Significantly higher vent flows have safely and routinely been disposed of at GRC. The area safety committee may permit higher vent rates based on demonstrated safe experience or appropriate safety analysis.

At PBS, the guideline for the steady-state quantity of unburned hydrogen is 0.5 pounds/second released from a single vent at least 15 feet above a roof peak.

6.5.13.3 Vent Stack Designs

Reference CGA G–5.5 and NASA GRC drawings CF639138, CF639179, and CF303496 for typical 8-, 6-, and 4-inch vent designs.

In the preferred design, each flow system would have its own vent stack because interconnecting vent discharges to the same vent stack could overpressurize parts of the vent system. An inadequate design could effectively change the release pressure on all relief valves and rupture disks connected to the vent system, and overpressure could reverse buckle burst disks in other parts of the system.

High-pressure, high-capacity vent discharges and low-pressure vent discharges shall not be connected to the same vent stack unless there is sufficient vent capacity to avoid overpressurizing the weakest part of the system. The discharge from vacuum pumps shall be ducted to specifically dedicated vents.

The vent systems shall be designed to carry vented hydrogen to safe-release locations above the roof and support the excess thrust load caused by venting the liquid, vapor, or gas. Vents for hydrogen, however, shall not be interconnected with vents for other fluids.

6.5.13.4 Vent Stack Operations

Small quantities of hydrogen may be disposed of outdoors through vent stacks at suitable heights. A check valve or other suitable device should be provided in the vent stack near the atmospheric discharge to limit the backflow of air. The vent piping shall be prepurged to ensure that a flammable mixture does not develop in the piping when hydrogen is introduced. Nitrogen gas may be used as a purge and blanketing gas when process temperatures are above –321 °F. For lower temperatures, helium gas should be used. Vent lines may need trace heating to prevent icing of relief devices.

Nonflare designed hydrogen vent stacks may still occasionally ignite. Possible ignition sources include corona discharge and lightning. The design location of hydrogen vent stacks must take into consideration that all of these stacks may ignite and burn. A system and procedure shall be in place to terminate a hydrogen fire on all nonflare designed vent stacks.

One example, used at Kennedy Space Center and Plum Brook Station for nonflare standby vent stacks that often autoignited from atmospheric discharges is to electrically isolate the top section (nominally 10 feet) of vent stack from the remainder of the system. Using a nonconducting gasket and bolt insulator sleeves at a flange joining the two sections allows the top section of the vent to electrically float at atmospheric potential and the lower section, at ground potential. An adjustable spark gap across the electrical isolation flange joint allows sparks to occur away from the venting hydrogen. (Also incorporate check valves and prepurge as identified in vent stack operations paragraph and any other positive considerations as may prove beneficial to this design).

6.5.13.5 Explosion Venting

If the vent area is sufficiently large it may reduce the severity of hydrogen-air tank explosions. Explosion vents shall not be connected to gaseous hydrogen vent systems.

In general, it is not possible to provide effective venting against an explosion in pipes or long, narrow tanks. See NFPA 68, Guide for Venting of Deflagration, for additional information.

6.5.13.6 Burnoff Flare Stacks

Larger quantities of hydrogen that cannot be handled safely by roof vent systems are best disposed of in a burnoff system in which the liquid or the gas is piped to a remote area and burned with air. These systems shall have pilot ignition warning systems in case of flameout and a means for purging the vent line.

Diffusion flames are most frequently used in flare stack operations; that is, combustion air from the open atmosphere mixes with hydrogen beyond the vent stack discharge, not with the hydrogen within the stack. Although disposing of hydrogen by flaring is essentially safe, hazards related to flame stability, flame blowoff, and flame blowout do exist. The following list contains important safety rules for disposing of hydrogen by burning:

1. The safe disposal of hydrogen through flare stacks requires suitable flows. Atmospheric wind may modify stable performance because the wind not only aids air entrainment but also may direct the flammable mixture laterally from the stack rather than to substantial heights above the facility.
2. Malfunctions in flare stacks, such as fires and explosions, have generally occurred at low flows with air forced downward from the atmosphere. Stack discharge velocities should be from 20 to 30 percent of the sonic velocity. Where the flow is too low to support stable combustion, a continuous purge or a slight positive pressure should be provided.
3. Liquid or gas in flared venting systems should be piped at least 200 feet (61 meters) from the work and storage areas and burned with air.
    a. Water pond burning (burn pond) may be used (under proper climatic conditions) for rapid releases of large quantities as well as for relatively long releases. The hydrogen is dispersed through a submerged pipe manifold to evolve into the atmosphere, where it is ignited and burned. The water serves as a seal to prevent backmixing of air into the distribution manifold and pipeline and provides some protection for the manifold from thermal radiation damage.
    b. Ignitable substances such as trees and grass shall be removed from the vicinity of overland flare stacks.
4. Burnoff flare stacks shall be designed and operated so they do not present a hazard to low-flying aircraft.
5. Hydrogen in a trailer traveling on a highway should be disposed of by venting it unburned in a safe location, away from populated areas and high enough to increase dispersion.

6.5.13.7 Altitude Exhaust Systems

Unburned hydrogen may be dumped into the altitude (vacuum) exhaust system only under certain conditions. Approval of the Process Systems safety committee is required in all cases. Furthermore, a special waiver from the Safety, Health, and Environmental Board is required before the following limits may be exceeded.

6.5.13.8 Lean Mixture Operations

It shall be permissible to introduce hydrogen-air mixture ratios leaner than 0.0068 by weight into the altitude exhaust system. (In calculating the hydrogen-air ratio, noncondensable inert gas that is added to the system may be considered as air.) This value is based on explosive limits and not on the lower limit of flammability. The 0.0068 ratios are about 50 percent of the lower explosive limit of hydrogen at standard pressure and temperature.

The preceding statement includes routine and emergency phases of altitude exhaust system operations including but not limited to hydrogen-rich experimental testing, engine blowout, failure to start, and hydrogen line failure within the exhaust system.

6.5.13.9 Rich Mixture Operations

Hydrogen-air mixture ratios richer than 0.0068 by weight may be introduced into an exhaust system provided that the entire system is capable of withstanding a detonation of the mixture. The system shall be capable of withstanding pressures 20 times the maximum system operating pressure; however, heads, baffles, elbows, and other types of obstructions must withstand 60 times the maximum system operating pressure.

Ultimate stress values may be used to calculate "design-of-system" pressures for rich mixtures because the pressure pulse is of such short duration.

6.5.13.10 Burnoff Ignition Torches

With burnoff ignition torches, controlled burning of free hydrogen before it can accumulate and detonate may enhance safe operation of hydrogen systems at sea level and within an altitude exhaust facility. This burnoff technique is effective at test cell pressures of greater than 4 psia.

6.5.14 Slush Hydrogen Systems

The primary considerations in the design of slush hydrogen systems are thermally protecting the fluid during handling and preventing air from intruding into the storage vessel.

Slush hydrogen systems shall be designed to operate so as to prevent air intrusion into the system (normally at 1.02 psia). Such systems must be designed to handle possible system blockage and wear from the solid particles of hydrogen contained in the flow stream. The structural design materials suitable for liquid hydrogen service are suitable for slush service.

6.6 Materials (*ANSI/AIAA G–095–2004*)

All structural materials shall be selected to provide safe performance with the least degradation of their mechanical properties.

6.6.1 Code Requirements

The materials for fixed-storage hydrogen containers shall be selected, and the containers shall be designed, constructed, and tested in accordance with the appropriate requirements of the ASME Boiler and Pressure Vessel Code.

Materials specifications and thickness requirements for hydrogen system piping and tubing shall conform to the ASME B31.3, Process Piping. Piping or tubing for operating temperatures below 20 °F (29.9 °C) shall be fabricated from materials that meet the impact test requirements of Chapter GR–2 of ASME B31.12 when they are tested at the minimum design metal temperature to which piping may be subjected in service.

6.6.2 Materials Selection

Selection of materials for liquid hydrogen use requires knowledge of the following:

- Hydrogen's unique properties and the effect of cryogenic temperatures on material behavior
- Specific requirements such as pressure, temperature, length of service, physical properties, fluid conditions, and critical performance requirements
- The mechanisms by which flaws can lead to failures

6.6.2.1 Typical Materials

Table A5.2 of ANSI/AIAA G–095–2004, Guide to Safety of Hydrogen and Hydrogen Systems, lists typical recommended materials and their applications in liquid and gaseous service systems.

Also reference CGA G–5.4, Standard for Hydrogen Piping Systems at Consumer Locations.

6.6.3 Hydrogen Embrittlement

6.6.3.1 Effect on Mechanical Properties

Hydrogen service generally reduces the mechanical properties of structural materials. Such losses have been attributed to three independent primary factors: a critical, absorbed, localized hydrogen concentration; a critical stress intensity (crack length and applied or residual stress); and a susceptible path for hydrogen damage. Hydrogen effects on metals include the following:

- Environmental hydrogen embrittlement, present in metals and alloys plastically deformed in a high-pressure environment, leads to increased surface cracks, losses in ductility, and decreases in fracture stress.
- Internal hydrogen embrittlement, brought about by absorbed hydrogen, may cause failures in some metals with little or no warning.
- Hydrogen reaction embrittlement, caused by absorbed hydrogen's reaction with the base metal, an alloy, or a contaminant, typically results in very brittle hydrides that lower the metal's ductility.

6.6.3.2 Considerations in Design

Mechanical property loss can be prevented by such measures as application of coatings, elimination of stress concentrations and additions of impurities to gas-phase hydrogen, oxidation treatments, grain size, specifications of inclusion morphology, and careful selection of alloys.

Available data are sometimes not sufficient to allow selection and application of any specific preventive measure, although the following recommendations can be made:

1. Whenever practical, use aluminum alloys for hydrogen containment. Aluminum is one of the few metals with only minimal susceptibility to hydrogen attack.
2. Use containers with thick walls of low-strength metals because they generally contain hydrogen more safely than containers fabricated from similar alloys treated for high strength.
3. A metal or alloy exposed to cyclic stresses is almost certain to have lower resistance to fatigue if hydrogen is present; in the absence of data, always assume a fivefold increase in fatigue growth rates.
4. Avoid the use of body-centered-cubic metals and alloys whenever practical. Do not use hydride-forming metals and alloys as structural materials for hydrogen service.

6.7 Ignition Sources (*ANSI/AIAA G–095–2004*)

6.7.1 Concept

Elimination of ignition sources is a second line of defense for safe operation with hydrogen. The general procedure is to eliminate all likely ignition sources.

6.7.1.1 Eliminating Risks

Hydrogen leaks and accumulations occur despite safeguards against them. The optimum protection against unsafe conditions is the elimination of all likely ignition sources near the hydrogen hazard areas. However, escaped hydrogen is very easily ignited by unexpected means, and the presence of unknown ignition sources must be always expected. Therefore

1. Controls shall be established for limiting ignition sources in critical areas.
2. Necessary ignition sources in hydrogen areas should be surrounded locally with inert gas and noncombustible heat sinks.

3. Operating limits shall be established for all energized equipment to minimize the temperature, energy, and duration of unavoidable ignition sources.

6.7.1.2 Maintaining Acceptable Safety Risks

If ignition sources are a required part of the hydrogen test apparatus, provisions shall be made to maintain acceptable safety risks during any resulting explosion or fire. Burnoff ignition torches may enhance safe test operations under these conditions by mixture when it first reaches a flammable level. The accumulation and detonation of larger hydrogen accumulations is then prevented. See Sections **6.5.13.6** and **6.5.13.10** for more information.

6.7.2 Potential Ignition Sources

Ignition of hydrogen-air mixtures usually results in ordinary combustion or deflagration, and thus, hazards from overpressure and shrapnel are less than those from detonations (refer to Section **3.1.1**).

The autoignition temperature, the minimum temperature for self-sustained combustion, is 1065 °F (874 K) for a stoichiometric mixture of hydrogen and air. Compare this value with 481.4 °F (523 K) for kerosene and 438.2 °F (499 K) for aviation fuel such as an octane. Although the autoignition temperature of hydrogen is higher than those for most hydrocarbons, hydrogen's lower ignition energy makes the ignition of hydrogen-air mixtures more likely. The minimum energy for spark ignition at atmospheric pressure is about 0.02 millijoules.

6.7.2.1 Electrical

Electrical sparks are caused by sudden electrical discharges between objects having different electrical potentials (e.g., breaking electrical circuits or discharges of static electricity). The minimum spark ignition energy at 1 atmosphere in air and in oxygen is given in Table **3.2**.

6.7.2.2 Examples of Electrical Ignition Sources

- Sparks that are caused by hard objects coming into forcible contact with each other, such as metal striking metal or stone or stone striking stone (Sparks are particles of burning material that have been sheared off as a result of contact.)
- Objects at temperatures above 1065 °F (847 K) that will ignite hydrogen-air or hydrogen-oxygen mixtures at atmospheric pressure (Substantially cooler objects (about 600 °F or 590 K) cause ignition under prolonged contact at less than atmospheric pressure.)
- Open flames and smoking that can easily ignite hydrogen mixtures

6.7.3 Limiting Electrical Ignition Sources

6.7.3.1 Classification of Hydrogen Areas

Areas where flammable hydrogen mixtures are normally expected to occur shall be classified as Class I, Division 1, Group B, in accordance with NEC.

Areas where hydrogen is stored, transferred, or used and where the hydrogen is normally contained shall be classified as Class I, Division 2, and Group B as a minimum. The NEC (NFPA 70) shall be consulted to determine if an area will be made safer by being classified as the more stringent Division 1 installation.

The area safety committee may permit certain test cells where hydrogen is used to remain electrically unclassified if appropriate safety justification is presented. A rocket test cell firing into the open atmosphere might be an example. A waiver of the required Division 1 and 2 designations will be by special exception rather than as a rule and will require approvals of the appropriate committee and Safety Branch.

6.7.3.2 Explosion-Proof Enclosures

A Division 1 installation differs from a Division 2 installation mainly in its degree of isolation from the electrical ignition sources in the system. A Division I installation relies heavily on explosion-proof enclosures for its isolation; such an explosion-proof enclosure is not gas tight. Explosion-proof equipment is equipment that has been qualified by a testing laboratory as being "explosion proof" for a specific gas. It means that

1. The enclosure is strong enough to contain the pressure produced by igniting a flammable mixture inside the enclosure, if code-required seals are properly used.
2. The joints and threads are tight enough and long enough to prevent issuance of any flames or any gases that would be hot enough to ignite a surrounding flammable mixture.

Guidelines for installing and using explosion-proof equipment are given in NFPA 70, KSC STD E 0012 and in NFPA 496.

6.7.3.3 Equipment for Hydrogen Areas

All electrical sources of ignition shall be prohibited in classified areas, including open electrical arcing devices and heaters or other equipment that operates at elevated temperatures. This means that one should use approved explosion-proof equipment (Class I, Division 1, Group B) or select non-arcing equipment approved for Division 2. Articles 500 and 501 of NFPA 70 cover equipment application and installation methods for these locations.

Intrinsically safe installations approved for hydrogen area service may be used if there is appropriate grounding, labeling, and wire separations in accordance with NFPA 70, Article 504, Intrinsically Safe Systems and with ANSI/ISA RP 12.06.01, Wiring Practices for Hazardous (Classified) Locations Instrumentation.

Another alternative to using explosion-proof equipment is to locate the equipment in an enclosure that is purged and then maintained at higher than ambient pressure with air or an inert gas. An indication of positive pressure shall be provided. See NFPA 496, Purged Enclosures for Electrical Equipment.

Cost is minimized if electrical junction boxes are installed outside the hazardous area. If systems are installed in the hazardous area, but are not required during hazardous periods, they may be built with general-purpose equipment, provided that they are disconnected before the hazardous period begins. The conduits for such systems must be sealed in accordance with NEC requirements (NFPA 70) to contain hydrogen within the hazardous area and to exclude inert purge gases from control rooms and other occupied areas. Area safety committee and Safety Branch approval of this protection method is required.

See Section **6.5.4** for electrical equipment selection.

6.7.3.4 Classification of Electric Motors

Electric motor classification rules and definitions are specified in NFPA 70, Article 501.

For Division 1 locations, a totally enclosed, fan-cooled motor can be used if an inert purge is used. Large electric motors are not generally manufactured in explosion-proof Division 1 configurations. However, electric motors of a non-arcing, nonsparking design (brushless, induction) are suitable for Division 2 locations if they meet the requirements of NFPA 70, Article 501.

In both Division 1 and 2 areas, surface temperatures of motors must not exceed 80 percent of the autoignition temperature of the surrounding gas. This means the motor case temperature must not exceed 867 °F for motors used in hydrogen service areas at ambient pressure. Monitoring of motor case temperature may be advisable under some conditions of use.

6.7.3.5 Grounding and Bonding

All transport, storage, and transfer system equipment and connections must be grounded. The offloading facility shall provide easily accessible grounding connections, and the connections shall be made before final operation.

NEC Article 100 (NFPA 70) defines the term “grounded” and lists the sizes of grounding conductors. The minimum size used for grounding fixed equipment in Class 1 areas shall be #2 American wire gauge.

All the metal components of a hydrogen system shall be electrically bonded and grounded in accordance with the NEC. This includes tanks, regulators, valves, pipes, vents, vaporizers, and receivers (mobile or stationary). Each flange should have bonding straps in addition to metal fasteners, which are primarily structural.

The resistance to ground shall be less than 10 ohms, and it shall be checked at least every 6 months to ensure this grounding is maintained. A facility record of these checks shall be maintained.

6.7.3.6 Portable Electrical Equipment

Portable electrical and electronic equipment shall be properly electrically classified for use in a classified hydrogen area. Portable radios, pagers, and hydrogen detectors are typical pieces of equipment that must meet this criterion.

6.7.4 Other Ignition Sources

6.7.4.1 Lightning

Lightning protection in the form of lightning rods, aerial cable, and ground rods shall be provided at all preparation, storage, and use areas. All equipment in buildings shall be interconnected and grounded to prevent induction of sparks between equipment during lightning strikes. This subject is developed further in NFPA 780, Standard for Installation of Lightning Protection Systems. The area considered to be protected by lightning rods or aerial cable is the area within 30° of either side of vertical.

6.7.4.2 Static

Static and electrostatic charges may be generated in flowing gases that contain solid or liquid particles as well as in flowing liquids and gases that are pure.

6.7.4.3 Sparks

Tests and experience indicate that in a liquid hydrogen atmosphere the energy required for ignition is so small that even spark-proof tools can cause ignitions. Therefore, all tools should be used with caution to prevent slipping, glancing blows, or dropping, all of which can cause sparks. Spark-proof and conductive floors, however, are not required.

Clothing made of nylon and other synthetic materials and certain kinds of electrically insulated shoes have generated large static electrical buildups, which have produced significant electrical sparks.

6.7.4.4 Hot Objects and Flames

The following rules will aid in preventing ignition by hot objects and flames:

1. Clearly marked exclusion areas shall be established around hydrogen facilities, and smoking shall be prohibited inside these exclusion areas.
2. Except as they occur normally during tests, flames and objects with temperatures above 80 percent of the hydrogen ignition temperature (871 °F or 739 K) shall be prohibited. Welding and cutting shall not be performed when hydrogen is present.
3. Motor vehicles and equipment employing internal combustion engines shall be equipped with exhaust system spark arresters and hydrogen-safe carburetor flame arresters when they are operated in an established control area during hydrogen transfer.
4. Flame arresters specifically designated for hydrogen applications shall be used to prevent open flames from contacting hydrogen-air atmospheres. A properly designed hydrogen flame arrester is very difficult to accomplish in practice because
    a. The small quenching distance of 0.024 inches (0.060 centimeters) for hydrogen makes it difficult to develop flame arresters and explosion-proof equipment that can successfully disrupt a deflagration or detonation originating within the equipment.
    b. Flame arresters designed for hydrocarbon flames will not stop hydrogen flames, and flame arresters that are effective against hydrogen-air flames may not stop hydrogen-oxygen flames.
5. Vegetation shall not be within 25 feet (7.6 meters) of gaseous or liquid hydrogen systems.

6.8 Detection of Hydrogen Leaks and Fire (*ANSI/AIAA G–095–2004*)

6.8.1 Hydrogen Leak Detection Systems

6.8.1.1 General Requirements of a Reliable System

A reliable hydrogen detection and monitoring system shall give warning when the maximum acceptable condition has been exceeded. This acceptable condition must still be in the safe range, and the warning should indicate that a problem exists. Visual alarms should be designed into the system to indicate hazardous concentrations.

> ***NOTE:*** *Care must be given to the selection of detectors to assure that they cannot become sources of ignition.*

The system should locate the source of a hydrogen leak within the facility during test operations. The goals for test facility hydrogen gas detection systems should be

- Detection of ±0.25 percent by volume of hydrogen in air
- Response time of 1 second at a concentration of 1 percent by volume
- Detection of 1 to 10 percent by volume of hydrogen in inert atmosphere

Portable detectors shall not be used as gas detectors for test installations that require remote location of personnel during the test period. Portable gas detectors are valuable for local leak detection.

6.8.1.2 Design and Calibration Requirements

In the design of a detection system, all possible hydrogen leak sources to be monitored shall be listed and evaluated. Valid justification shall be presented for deciding not to monitor a possible leak source.

A means to ensure that any leaking hydrogen passes the detectors at the installation must be part of the system design and installation. Consideration should be given to using hoods to route any leakage across the detector, which should be positioned to indicate area detection rather than point detection. Hydrogen leaks at exposed liquid hydrogen valves and outside containers or at exposed vacuum-jacketed liquid hydrogen lines may be allowed to diffuse into the atmosphere.

The detection system design shall ensure that the system's expected response time is rapid enough to be compatible with the fire detection or auxiliary safety system.

To ensure acceptable performance, periodic maintenance and field recalibration of detectors shall be conducted every 6 months. Facility records of these recalibrations shall be maintained onsite.

Hydrogen detector locations and alarm levels. The number and distribution of sampling points in hydrogen detection systems must be based on the possible rate of leakage, the amount of ventilation, and the size of the area. A single sampling point does not provide adequate sensing. Typical locations requiring detectors and the recommended performance requirements are presented herein.

> ***NOTE:*** *At STP, 1 percent by volume of hydrogen in air is 25 percent of the lower flammability limit.*

6.8.1.3 Facility Test and Transfer Areas

In the area around hydrogen facilities, a 1-percent-by-volume hydrogen concentration at any point 3.28 feet (1 meter) or greater from the hydrogen equipment shall generate an ambient pressure warning. A 2-percent-by-volume concentration shall generate a high-level alarm. The performance of these detectors depends on the location of the sensors and the leak and on the direction of the wind. The number of sensors must be adequate for the area.

In vacuum-jacketed equipment, detectors are not necessary because liquid hydrogen leaks may be detected through loss of vacuum, formation of frost, formation of solid air, or decrease in outer wall temperature.

6.8.1.4 Enclosure Exhaust Ports

For exhaust vents from enclosures containing hydrogen piping and storage systems, detectors should be located in the vent stream at ambient pressure and within 3 feet of the vent port. Examples of such are vent ports from purged

boxes containing hydrogen valves and ventilation discharge ducts from enclosed force-ventilated test areas where hydrogen is used.

A detector shall warn of a 1-percent-by-volume gaseous hydrogen concentration in the purge exhaust from enclosed areas containing hydrogen systems. A 2-percent-by-volume gaseous hydrogen concentration, or higher, in the purge exhaust from enclosed areas would indicate a hydrogen leak and potential fire hazard within the enclosure. At this alarm level the hydrogen source shall be shut off.

Altitude (vacuum) chambers: Detectors in the altitude chamber shall generate an alarm if 1-percent-by-volume hydrogen concentration occurs when the chamber is not evacuated. A 4-percent-by-volume hydrogen concentration in the evacuated duct shall generate an alarm during altitude operation.

Leak detector accuracy and sensitivity cautions. The catalytic combustion devices currently available can be affected by large concentrations of helium gas. Ionizing hand-held detectors cannot differentiate between gaseous helium and gaseous hydrogen, so a high helium concentration will give a high reading as if it were hydrogen. Furthermore, a nitrogen-rich environment can cause these detectors to give negative readings.

6.8.2 Fire Detectors

Hydrogen fires pose a special safety problem because the flames are essentially invisible. Therefore, thermal and optical sensors have been developed to detect burning hydrogen.

- Thermal fire detectors that can be classified as rate-of-temperature-rise detectors and heat detectors are not subject to frequent failure. To cover a large area or volume, many thermal detectors are required and they must be located at or very near the site of a fire.
- Optical sensors for detecting hydrogen fires operate in two spectral regions, ultraviolet and infrared. In general, different sensors and optical components must be used in each region. Closed-circuit infrared and ultraviolet remote-viewing systems equipped with appropriate filters have been used successfully.
- Linear heat detection systems consist of heat-sensitive polymer insulation and inner conductors that move into contact with each other at any point along its length once a rated activation temperature is reached.

Fire detection systems should be installed in storage and use areas to warn whenever a worst-allowable condition is exceeded. The fire detectors should give a rapid and reliable indication of the existence, location, and size of a hydrogen fire.

Automatic shutdown systems, triggered by multiple fire detectors and activated quickly enough to prevent large-scale damage, should be considered. Connecting an automatic shutdown system to a fire-detecting system may not always be effective since alarms may be triggered by reflections from allowable fires (burn ponds and flare stacks) and sunlight.

6.9 Standard Operating Procedures (*ANSI/AIAA G–095–2004*)

6.9.1 Policy

Standard operating procedures (SOPs), with checklists as required, shall be developed for common operations. The SOP's should be set by individuals directly involved with hydrogen operations and shall be approved during the safety permit review process. These procedures should be reviewed and updated periodically.

6.9.1.1 Confined Spaces (See Chapter 16 of the Glenn Safety Manual)

Repairs, alterations, cleaning, or other operations in confined spaces in which hydrogen vapors or gases are likely to exist are not permitted until a detailed safety procedure is established. These procedures should

1. Specify, as a minimum, the evacuation or purging requirements necessary to ensure safe entry and the maximum hydrogen concentration limits allowed (10 percent of the lower flammability limit in the confined space)
2. Require that an acceptable gas sample be taken before personnel are allowed to enter.
3. Require that persons engaged in operations be advised of possible hazards.
4. Provide for emergency rescue training.

5. Ensure that at least one trained person be always available in case of emergency.

Before major work is performed on hydrogen vessels, they must be drained and purged of hydrogen. All pipelines leading to systems still containing hydrogen shall be disconnected, capped or blank-flanged, and tagged. The following should be done before work begins:

1. De-energize electric power supply to equipment within the vessel.
2. Purge tanks of flammable vapors and test to ensure the effectiveness of the purging operation.
3. For major repairs or modifications, warm and purge the vacuum annulus. (Purging of vacuum jackets is a unique procedure that requires careful planning and execution.)

6.9.2 Requirements for Personnel

Training (see Section **6.1**) shall familiarize personnel with the physical, chemical, and hazardous properties of hydrogen and with the nature of the facility's major process systems (i.e., loading and storage; purge gas piping; control, sampling, and analyzing; alarm and warning signals; ventilation; and fire and personnel protection (see Section **6.10**).

The buddy system of the appropriate level must be followed. Chapter **22** details the level normally accepted for GH2 operations and handling, although the two "qualified operators" who shall be present are required to have an equal degree of knowledge. This qualified operator policy applies to both hydrogen research test operations and hydrogen handling operations. However, no more than the minimum number of personnel necessary should be present in a hazard area (see Chapter **2**).

6.9.3 Startup Examination and Inspection

6.9.3.1 Examination

The test site engineering operations organization is responsible for ensuring that the following are accomplished before system startup:

1. Before initial operations, all storage and piping installations and their components shall be inspected to ensure compliance with the material, fabrication, workmanship, assembly, and test requirements established by NASA. Hydrogen system examinations shall be performed in accordance with the ASME Boiler and Pressure Vessel Code, Section V.
2. The completion of all required examinations and testing shall be verified. Verifications should include but not be limited to certifications and records pertaining to materials, components, heat treatment, examination and testing, and qualification of welding operators and procedures.
3. Materials must be identified for all piping and components used in fabrications and assemblies subjected to liquid hydrogen temperatures. No substitutions for the materials and components specified in the engineering design are permitted without written approval from the facility project engineer. During reassembly, cleanliness and dryness of all components shall be maintained.

6.9.3.2 Test Records

Records shall be made on each system and piping installation during system checkout testing. These records should include date of test; identification of system, component, and piping tested; test method (e.g., hydrostatic, pneumatic, or sensitive leak); test fluid; test pressure; hold time at maximum test pressure; test temperature; locations, types, and causes of failures and leaks in components and welded joints; types of repair; test records; and the name of the responsible safety design engineer or operations engineer.

Test records shall be retained by the responsible operating organization and may need to be incorporated in the system configuration management system.

6.9.4 Signals and Identification

6.9.4.1 Safety Signals

Established uniform audible and visible safety signals are to be used at GRC, and all personnel must know and obey them. The meanings of the signals shall be posted in all operational areas. These signals are specified in Chapter **19**, Vehicle and Pedestrian Safety, Section **6.3** Safety Barricades.

6.9.4.2 System Identification

The approved method of indicating the contents of a container or system is the printed word.

6.9.5 Checklists

Checklists are substantial aids to safe operations and therefore are required for all installations.

6.9.6 Allowable Hydrogen Leakage at Test Installations

Every reasonable effort should be made to eliminate leakage from installations where hydrogen is used. In practice, however, it is sometimes very difficult to completely eliminate leakage. Therefore, operations may be performed coincident with some leakage if the test installation is entirely out of doors or is in a well-ventilated expendable building. Tolerable hydrogen leakage shall not exceed 25 percent of the lower explosive limit at a distance of 2 feet above the leakage source (no wind) and shall be permitted only when

- The source of leakage is known and the leakage is stable (e.g., leakage from a crack may be unstable because the crack might widen).
- Plentiful ventilation is provided.
- The leakage is unconfined and free to diffuse rapidly.
- Ignition sources are eliminated.
- Gas detection means are employed as stated in Section **6.8**.
- Leakage is determined at test temperatures and pressures or by using helium in conjunction with a mass spectrometer and by converting the reading to the equivalent quantity of hydrogen.
- The facility's responsible engineering manager gives written approval of the operation.

6.9.7 Clean Systems (see also Appendix C)

Systems, including their components, for storing and piping liquid and gaseous hydrogen shall be appropriately cleaned for service, thereby ensuring the removal of contaminants and avoiding mechanical malfunctions, system failures, fires, or explosions. Effective cleaning will remove greases, oils, and other organic materials as well as particles of scale, rust, dirt, weld spatter, and weld flux.

The cleaning of liquid hydrogen systems is a specialized service that requires well-trained, responsible individuals to properly carry out the necessary procedures. Note the following guidelines:

1. Some systems may require disassembly for suitable cleaning. Components that could be damaged during cleaning should be removed and cleaned separately.
2. The compatibility of cleaning agents with all system construction materials must be definitely established. Cleaning methods include steam or hot water cleansing; mechanical descaling; vapor, solvent, or detergent degreasing; acid cleaning; and purging.
3. Clean flexible hoses and pipe sections should be sealed and marked to indicate certified cleanliness. The ends should be closed with metal caps and then covered with a clean plastic bag or sheet and, where required, sealed with a tamper-proof seal tape.
4. Systems should be rechecked periodically for cleanliness; the facility engineers should determine the schedule. Accumulations of wear debris and frozen contaminants are possible.
5. Cleaning operations, agents, and their effects on construction materials are described briefly in Appendix **C** of this chapter.

6.9.8 Purging

Before a hydrogen system or vessel is loaded, it must be made inert. This may be accomplished by a vacuum purge, a positive pressure purge, or a flowing gas purge to ensure complete removal of any contaminant gases. These gases, when trapped in a liquid hydrogen system, solidify and introduce the possibility of contamination, fire, or explosion.

6.9.8.1 Vacuum Purge

Vacuum purging is the most satisfactory method of making a system inert since it requires fewer operations and ensures the elimination of air or nitrogen pockets. The system is vented to the atmosphere, evacuated to a relatively low pressure, repressurized with an inert gas to a positive pressure, and again re-evacuated. Before purging the system, the operator must be sure that the container or system will not collapse when the vacuum is applied.

Recommended steps for a vacuum purge are as follows:

1. Evacuate the system to below 10 torr (1.333 kilopascals).
2. Perform a pressure rise-rate test under static conditions and ensure that the system is tight by observing the rate of pressure rise within the system. (A 1-torr/minute (133-pascals/minute) rise for a 5-minute period indicates good vacuum-holding ability.)
3. Backfill with nitrogen or helium to atmospheric pressure.
4. Re-evacuate to 10 torr (1.333 kilopascals).

Two or more cycles of steps (3) and (4) may be required to achieve a contaminate concentration that is low enough (nominally 0.1 percent by volume). A theoretical determination of concentration can be found by multiplying the ratios of the absolute pressures for each purge cycle.

The system is now ready for hydrogen, and the vacuum may be broken with hydrogen gas.

6.9.8.2 Positive Pressure Purge

A positive pressure purge requires alternate pressurizing and venting of the system to progressively dilute air until a safe environment is obtained.

1. Air in the system is diluted with an inert gas to a positive pressure within the working pressure range of the vessel. (Helium must be used for liquid hydrogen system purges; nitrogen will freeze at liquid hydrogen temperatures.) Venting to the atmosphere then displaces the mixture.
2. The system is repressurized to the positive pressure, and the mixture is again vented to the atmosphere. A positive pressure must be maintained in the receiver during these procedures to prevent the backflow of air.
3. Following a check to ensure the system oxygen level is below 0.1 percent by volume, liquid or gaseous hydrogen may be introduced into the container.

It may be necessary to repeat these steps to obtain a safe hydrogen environment. A theoretical determination of contaminant gas concentrations can be found by multiplying the ratios of the absolute pressures for each purge cycle.

6.9.8.3 Flowing Gas Purge

A flowing gas purge is the least likely method of ensuring a positively purged system. It requires the use of an inert gas flowing into one part of the system and out of another part of the system. Helium must be used for liquid hydrogen systems; nitrogen or helium may be used for gaseous hydrogen systems.

Considerations in a flowing gas purge are volume to be purged, gas flow rate, and purge duration. Turbulent flow or a sufficiently high flow rate must be achieved to thoroughly purge all parts of the system. This method should be used only for short lines.

6.9.8.4 System Purge Sample

A newly purged system should be sampled to ensure it is safe for loading hydrogen. Normally, this requires the oxygen level to be below 0.1 percent by volume. Since nitrogen can contaminate a liquid hydrogen system by

condensing and freezing at liquid hydrogen temperatures, nitrogen concentrations below 0.1 percent by volume are recommended.

6.9.9 Gaseous Hydrogen Tube Trailers and Cylinders (*CGA G–5, 49 CFR Chapter 1, Part 177*)

6.9.9.1 Gaseous Hydrogen Tube Trailers

Specific equipment and procedures are required for gaseous hydrogen tube trailers.

6.9.9.2 Equipment Requirements

All GRC-owned gaseous hydrogen tube trailers shall be fitted with remotely operated transfer shutoff valves of a GRC standardized design and configuration. Only inert gas or dry air shall be used to operate these remote shutoff valves.

Transfer lines (trailer to facility) may be made of corrugated stainless steel, rubber, or Teflon hose, with the proper pressure rating, inside an external braid of stainless steel. Proper restraining cables and anchoring are required. A stainless steel tube with proper pressure rating may also be used. Forming the tube into a large loop provides for some flexibility in the connection.

6.9.9.3 Operational Procedures

Specific operational procedures to connect, start up, and shut down GRC gaseous hydrogen tube trailer systems are found in Appendix **B**Appendix D of this chapter.

6.9.9.4 Gaseous Hydrogen Cylinders

To prevent the infiltration of air into gas cylinders, the cylinder pressures should not be allowed to fall below 150 psig.

6.9.9.5 Mandatory Procedures

Specific operational procedures for the safe use of gaseous hydrogen cylinders are found in the CGA Pamphlet G–5, Sections 4 and 5. CGA Pamphlet G–5 is hereby adopted as a part of this chapter.

6.9.9.6 Safety Rules

These rules apply to all portable gas cylinders.

1. Do not transport cylinders unless the valve is closed and covered with a protective bonnet.
2. Never handle cylinders roughly.
3. Secure cylinders in an upright position with a chain, cable, or strap.
4. Store cylinders where they are not subjected to physical damage and where they are protected from direct sunlight.
5. Do not use leaky or damaged cylinders; mark them “defective” and notify the Safety Branch.
6. Never alter, repair, change, or disassemble a valve or safety disk on a cylinder.
7. Use proper regulators on all cylinders. Tag regulators to indicate use.
8. Do not use a wrench to open a cylinder valve. If it cannot be opened by hand, tag it as a bad valve and return it to the supplier.
9. Remove cylinders to a safe storage area when they are not being used.

6.9.10 Storage, Transfer, and Test Operations

A facility’s SOPs shall include safe general operating procedures for the storage, transfer, and test areas (29 CFR 1910.103). In addition, the facility shall provide good illumination, lightning protection, alarm systems, and gas detection and sampling systems. (The hydrogen detection equipment should be calibrated for short response times and detection of 25 percent of the lower flammability limit.)

To limit spill quantities, transfer operations shall be monitored whenever practical and provisions should be made for a programmed automatic shutdown in case the loading or unloading system fails. Furthermore, to protect the unloading area in case of a leak or spill, no liquid hydrogen transfer shall begin unless there is a positive shutoff capability in the supply vehicle system.

As part of the transfer procedures at GRC, the Safety Branch should be notified of the liquid hydrogen offloading location and time. At PBS, Plant Protection should be notified. The responsible manager shall verify that a pretest briefing has been conducted, that approved procedures are used, that emergency escape routes are clear, and that the operational area is clean and free from combustible materials and ignition sources.

Contractor unloading procedures, along with vehicle schematics and descriptions of the piping systems that interact with the NASA facility, must be provided to ensure performance of necessary precautions and procedures during and after unloading operations. As an additional safeguard, checklists shall be made for the operations performed by the supplier and user of the liquid hydrogen.

6.9.11 Cold-Shock Conditioning

All vessels and lines to be used for cryogenic service should be cold-shocked before final leak testing. Cold shocking verifies the integrity of the system for use at cryogenic temperatures. It is especially important that the expansion and contraction from ambient to cryogenic cycling not impose excessive stresses on any component.

Only those liquid hydrogen systems determined to be strong enough to carry the extra nitrogen weight may be cold-shocked with liquid nitrogen.

Components may be function-tested while immersed in liquid nitrogen, but fluid systems should be conditioned with liquid nitrogen (preferably) or hydrogen and function-tested at operating conditions. After the system has been purged, vented, and warmed to ambient temperature, all connections and threaded fittings should be retorqued.

The entire system shall be inspected for evidence of cracking, distortion, or other anomaly, with special attention given to welds. After repairs, cold-shock tests shall be repeated prior to the final pressure test.

6.9.12 Liquid Hydrogen Tank Cooldown

When a warm liquid hydrogen tank is being filled, the tank vent should be connected to a stack to remove hydrogen vapors from the work area. The liquid flow shall be throttled carefully to satisfactorily handle the flashoff through the vent system and to limit stress development due to excessive cooldown. Typical cooldown hydrogen vapor flows are 0.5 to 1.0 pound/second (0.23 to 0.46 kilograms/second). Note: If a warm Dewar needs to be filled, the commercial supplier often can deliver large amounts of cold gaseous hydrogen to the NASA Dewar before liquid hydrogen is added, thereby helping to reduce Dewar cooldown stress.

The filling system must be controlled so that the maximum liquid flow rate into the vessel is less than the tank vent system venting capacity. High vent flow rates can result in vent fires caused by static discharge. They can also result in excessive pressure increases that cause the safety valves to open or the safety disk to rupture. Tank pressures shall not exceed tank design working pressure during any routine operation. Note: This process can be aided by limiting the liquid supply Dewar pressure to a few psig above the tank being filled.

6.9.13 Optional Liquid Nitrogen Precool

An optional method of preparing a warm vessel or system to receive liquid hydrogen uses liquid nitrogen for precooling. The cooling process evaporates large amounts of the cooling liquid, so the vessel must be determined to be strong enough to carry the added load of nitrogen before this method is attempted. The following procedure is to be used:

1. Evacuate the vessel or system to approximately 10 torr (1.333 kilopascals). If this vacuum cannot be tolerated, a warm, inert gas pressure purge should be carefully planned as an alternate procedure.
2. Introduce the liquid nitrogen into the vessel or system, taking care to prevent air migration that will cause contamination.
3. Allow ample time to obtain all the cooling possible from the liquid and the cold gas. Drain off the remaining liquid nitrogen.

4. Remove the nitrogen atmosphere by purging the vessel with helium. Make sure all the nitrogen is removed from the vessel; this is very difficult to accomplish. (Vacuum or pressure pulse purging can be used to remove gaseous nitrogen.)
5. Admit liquid hydrogen into the vessel or system.

6.9.14 Liquid Hydrogen Systems

The equipment and techniques employed in the storage, transfer, and use of liquid hydrogen are determined by the requirements of the user. Procedures shall be periodically reviewed through the safety permit process.

6.9.14.1 General Procedures

The procedures for operating transfer and propellant system equipment will be determined by local designs and construction, the type of equipment, and the procedures prescribed by either the local engineering operations group or the equipment manufacturer. All personnel should be completely and thoroughly instructed before operating the equipment, and all valves, pumps, switches, and such should be identified and tagged. A written operating procedure shall be used at each operational site.

When all filling and transfer connections have been properly made, all inlet and vent valves should be set and checked before the transfer operation is started. Local piping designs will determine the details of the foregoing operation. Inspections for possible contamination and for operating conditions of the equipment are recommended after extended use and after periods of extended shutdown.

6.9.14.2 Composition Acceptance Tests

Requirements for liquid hydrogen composition, sampling methods, and quality performance testing are listed in specification MIL P 27201B and ASTM F310 70. Composition acceptance tests should be performed on the deliverable hydrogen, in the filled transport Dewar, in accordance with these specifications before it leaves the filling site.

6.9.14.3 Liquid Hydrogen Transfers

For safe transfer of liquid hydrogen, note the following:

1. Dewars shall be connected to electrical ground, inspected generally for leaks and mechanical defects, and checked for pressure and vacuum. The connections shall be cleaned and purged. (Contamination must be avoided.)
2. Surfaces should be monitored for condensed water or frost, since these may indicate leaks. Minor frost at bayonet connections is quite common and expected. Cold spots on vacuum-jacketed piping at the annulus spacers are also common.
3. All transfers must be made in closed systems. Liquid hydrogen shall not be transferred into an open-mouthed Dewar or be allowed to come into contact with air, for it can become contaminated with solid air. All hydrogen transfers should be made against enough backpressure to prevent air ingestion.
4. Liquid and gaseous hydrogen should not be transferred if there is an electrical storm or a fire near the facility.
5. Procedures to prevent overloading liquid hydrogen trailers and storage tanks must be followed. Overloading reduces the ullage space and may result in liquid hydrogen leakage during transportation (for trailers); excessive thermal cycling may cause the relief valves to become inoperable.

6.9.14.4 Beware

A major cause of leaks and spills in loading and unloading areas has been the accidental removal of mobile Dewars or gas tube trailers before a transfer hose is disconnected.

6.9.14.5 Ullage Requirements for Liquid Hydrogen Dewars

Ullage, or vapor space, must be maintained above the liquid hydrogen surface for safety purposes. (Filling into this space constitutes unsafe overfilling.) The design capacity for this equipment includes an excess volume normally

10 percent above the rated full capacity as shown on the level gauge. For example, a full 13,000-gallon Dewar contains 13,000 gallons of liquid hydrogen and has a 1300-gallon vapor space. The ullage requirements for slush hydrogen are appreciably greater than 10 percent. Refer to Section **3.5** for additional related information.

Retention of this ullage serves to avoid possible hydrostatic rupture of the vessel, since the vapor in the ullage is readily compressible whereas the liquid is not. It provides an ebullition surface to enable de-entrainment of the liquid from the vent stream and helps prevent freeze-up and consequent malfunction of the overpressure protective devices. Since changes in temperature affect the density of liquid hydrogen, available ullage varies. DOT regulations allow pressure to increase from 1 atmosphere to 17 psig in transit. This represents an ullage volume increase of more than 5 percent.

In summary, without adequate ullage, it is possible to get liquid into the vent piping during venting operations or through sloshing effects during transit. This impairs the operation of these systems and creates hazardous conditions.

6.9.14.6 System Leak Repair

No leaks shall be repaired until all pressure in the appropriate systems has been bled. All tools and fittings should be cleaned appropriately before use.

6.9.14.7 Contamination

Contamination must be prevented. Liquefied or solidified gases can contaminate liquid hydrogen when it is exposed to air or to other gases with a higher boiling point. Containers suspected of being contaminated must be removed from service immediately and must be tagged or otherwise identified as unfit for service. Arrangements with the group responsible for that container shall be made for special handling of the container.

6.9.14.8 Condensation of Contaminants During Loading

During loading of cryogenic hydrogen, water or any other condensable vapor may condense inside the system. In large systems, even contaminant levels measured in parts per million can produce a sizable frozen mass that could impede flow or system function.

Before a cryogenic system is loaded, all air, water, and condensable vapors shall be purged or evacuated from the system. Experimentation and sample analysis may be required to define the degree of purge or the number of evacuation cycles required.

6.9.14.9 Removing a Liquid Hydrogen Vessel From Service

Any liquid remaining in tanks containing liquid hydrogen or cold hydrogen vapor shall be removed through the liquid transfer hose to a liquid disposal system or shall be allowed to boil off through the tank hydrogen pressure buildup coil. Venting must take place through an approved hydrogen vent stack.

Purging a liquid hydrogen tank after the liquid is removed requires the use of gaseous helium or gaseous nitrogen. The instrumentation, calibrating and operating valves and lines, self-pressurization valves (hydrogen pressure buildup coil), and rupture disk bypass valves should be open during purging and venting.

During the final venting, the appropriate trailer valves shall be opened slightly to provide purge gas flow through the trailer connections and lines. A sample of the vented gas shall be taken from the trailer vent and from the empty try-cock valve to verify a hydrogen concentration of 1 percent or less by volume. A warmup period should follow.

6.9.14.10 Dewar Decontamination

Tanks and Dewars should be decontaminated (derimed) periodically by draining the contents and letting the product container warm up to permit removal of all contaminants. The warmup period shall be determined from the service history.

Contamination often occurs in roadable Dewars, which are frequently filled and emptied. Large, fixed Dewars generally do not require frequent decontamination unless they inadvertently become contaminated. The interval then depends on the degree of contamination, and engineering judgment must be used. The responsible managers shall make this decision.

To ensure decontamination, the container should be vacuum purged and vacuum static checked to 10 torr (1.333 kilopascals), if it is strong enough to withstand a vacuum. If the Dewar is not strong enough, a warming or pressure purge will be necessary, and dewpoint and gas analyses should follow.

6.9.15 Removal of Dewars and Gas Trailers From Test Facilities

Dewars and gas trailers should be disconnected from the test equipment after rig operation and moved away from the test facility as soon as practical. However, in controlled areas where large Dewars are used and disconnection may constitute a hazard, the Dewars may remain connected between periods of research operation at the discretion of the appropriate area safety committee. Gaseous hydrogen trailers, isolated from the system manifold, may also be left onsite with the approval of the area safety committee. When Dewars and tube trailers are moved, the peak traffic hours should be avoided.

6.9.16 Substitution of Dewars and Change of Content

Substitutions of Dewars and change of content are not permitted unless approved by the cognizant area safety committee and the responsible engineering managers. With interchange of equipment, purging must be complete and contents must be accurately marked on the Dewar. Note that many liquid hydrogen Dewars are not structurally capable of handling the heavier liquid nitrogen or oxygen. Critical issues, such as load-bearing capability, total heat leak, cleanliness, oil-free condition, and overall system compatibility are but a few of the considerations that must be thoroughly reviewed when changing content and/or substituting Dewars not designed specifically for gas intended to be utilized.

6.9.17 Slush Hydrogen

Procedures for handling slush hydrogen include those for gaseous and liquid hydrogen. However, additional procedures are required for slush hydrogen. Section **3.5** highlights the added hazards of slush operations.

6.9.17.1 Preventing and Monitoring Air Intrusion

System designs and operational procedures shall be developed and shall always be followed to eliminate the possibility of air intrusion into slush hydrogen systems. Operating slush hydrogen systems shall be monitored continuously for the intrusion of air.

Periodic System Warmup

Slush hydrogen systems should periodically be warmed to above the boiling points of nitrogen and oxygen (above 200 °R), and the residual gas should be analyzed. If nitrogen and oxygen are present, air has probably intruded and the system should be cleaned of any entrapped air.

The ANSI/AIAA G–095–2004, Guide to Safety of Hydrogen and Hydrogen Systems, provides an extensive discussion of operations with slush hydrogen.

6.10 Protection of Personnel and Equipment (*ANSI/AIAA G–095–2004*)

The best single investment in safety is trained personnel. Full consideration for the safety of personnel at and near hydrogen facilities must start at the earliest planning and design stages.

Training should familiarize personnel with the physical, chemical, and hazardous properties of liquid and gaseous hydrogen and with the nature of the major processing systems in the facility. It should also provide operators with practice in handling hydrogen as well as in handling emergency spills and fires.

Operators shall be kept up to date on changes in facility operations and safety procedures.

6.10.1 Protective Clothing

- All personnel who handle liquid hydrogen or who may be exposed to cryogenic vapors shall have eye and body protection. Any unprotected parts of the body must not be allowed to touch uninsulated pipes or vessels that contain liquid hydrogen because the cold will cause the flesh to stick and tear. Any clothing that is splashed or becomes soaked with hydrogen vapors should be aired out.
- Face shields shall be required when the system is being operated under pressure, when lines or components are being connected or disconnected, and when the system is being vented, unless the vent system releases gases away from all personnel.

- Proper gloves (e.g., leather) shall be worn when handling anything that comes in contact with cryogenic liquids or vapors. These gloves should fit loosely and come off easily.
- Adequate foot protection should be provided; open or porous shoes are not permitted. Trousers must be kept outside the boots or work shoes.

6.10.2 First Aid for Cryogen-Induced Injuries

6.10.2.1 Exposure to Cryogenic Gases/Liquids

Cryogenic burns result when tissue comes into contact with cold gases, liquid, or their containers. The result may be merely skin chilling or true tissue freezing. Commonly, only small areas are involved and the injury is to the outer layers of the skin.

Small quantities of cryogenic material may evaporate from the skin before actual freezing occurs; this injury typically produces a red area on the skin. More significant injury is caused by true freezing, the formation of crystals within and around the tissue cells. Frozen tissue always assumes a yellowish-white color that persists until thawing occurs.

Steps to prevent and emergency care for cryogen-induced injuries must be incorporated into safety standards and training programs for operations and emergency response. Personnel shall be knowledgeable about the risks of injury from cryogens.

6.10.2.2 Treatment of Frozen Body Tissue

Treatment of truly frozen tissue requires medical supervision because incorrect first aid practices invariably aggravate the injury. In the field it is safest to do nothing other than cover the involved area, if possible, and transport the injured person to a medical facility.

> ***NOTE:*** *Attempts to administer first aid for this condition will often be harmful. Here are some important don’ts:*

1. Don’t remove frozen gloves, shoes, or clothing except in a slow, careful manner (skin may be pulled off inadvertently). Unremoved clothing can easily be put into a warm water bath.
2. Don’t massage the affected part.
3. Don’t expose the affected part to temperatures higher than 112° F or lower than 100° F.
4. Don’t apply snow or ice to the affected area.
5. Don’t use safety showers, eyewash fountains, or other sources of water because the temperature will almost certainly be incorrect therapeutically and will aggravate the injury.
6. Don’t apply ointments.

Although safety showers may be provided, they should not be used for treatment of cryogen burns.

6.10.3 Access to Hazardous Areas

6.10.3.1 Test Cell Entry Forbidden

Test cells and buildings with combustible hydrogen mixtures in the atmosphere shall NOT be entered under any conditions. Furthermore, no personnel may enter a test cell when liquid hydrogen or propellant gaseous hydrogen is flowing in the cell.

6.10.3.2 Test Cell Entry Conditions

Every entry into an operating test cell must be considered dangerous. After conditions within the cell have been determined to be safe, only authorized personnel shall be granted entry and then only if the project operating engineer and the personnel who are entering determine such entry is necessary. The appropriate buddy system shall be employed, and entry shall be limited to essential personnel.

6.10.3.3 Monitoring Personnel in Cells

Personnel outside the test cell shall know the presence of personnel in an operating test cell. Others shall monitor in-cell personnel continuously outside the cell, either by direct sight or closed circuit TV or by the two-man buddy system with periodic calls back to the control room.

6.10.3.4 Warning Personnel of Hazards

Personnel must be warned of the presence of combustible mixtures or low oxygen concentrations. Automatic warning systems shall operate both an audible and a visible alarm. Warning alarms shall be designed so that they are not ignition sources themselves.

6.10.3.5 Work in Confined Hydrogen Areas

Unless a detailed safety procedure is established, work is not permitted in confined spaces in which hydrogen gas could exist. See Chapter **16** of this Manual.

6.10.4 Protective Shelters and Control Rooms

Structures close to the test facilities, which would normally house personnel during a test, shall be designed to adequately protect the occupants if the test facility should explode. The design shall be in accordance with the guidelines in Section **6.5** and shall consider the following:

1. Particular attention shall be paid to the ventilation or source of air for shelters that may, in case of emergency, be enveloped in hydrogen gas or the products of combustion.
2. Inert gases shall not be piped into tightly sealed shelters if there is a possibility of accidental release, which could result in suffocation from lack of oxygen. Likewise, purged electrical gear and conduits shall be sealed from personnel shelters.
3. Hydrogen shall not be piped into shelters or control rooms.
4. In hydrogen test areas, barricades are often needed to shield personnel, Dewars, and adjoining areas from blast waves and/or fragments. Barricades are needed to isolate liquid hydrogen storage areas that are too close to public property.

6.10.5 Safeguards in Inert Environments

Asphyxiation is a safety concern for personnel entering vessels containing inert environments. Acute asphyxia, as from breathing 100-percent inert gases, produces immediate unconsciousness without warning; it happens so quickly that individuals cannot help or protect themselves. Workers may fall as if struck down by a blow on the head and will die in a few minutes if not resuscitated.

To prevent asphyxiation, the contents of a vessel's atmosphere shall be checked before any personnel enter it. Any person entering a vessel shall wear a harness-type safety belt with a lifeline attached. The line must be tended by a watcher positioned outside the vessel at a point where the watcher can be in constant communication with the worker throughout the time the worker is in the vessel. In addition, the worker shall wear a supplied-air respirator if asphyxiation could occur (see Chapter **15** for proper respirator equipment).

Personnel shall never enter an enclosure or vessel, which may contain unsafe quantities of hydrogen or any other inert or toxic gas.

6.11 Blast Effects and Separation Distances (*NFPA 55, ANSI/AIAA G–095–2004, NSS 1740.12*)

6.11.1 Quantity-Distance Concept

Quantity distances are based on the concept that the effects of fire, explosion, and detonation can be reduced to tolerable levels if the source of hazard is kept far enough from people and facilities. Tests, analyses, and experience are employed to determine the relationship between the effects of an accident and the quantity of material involved in the accident. From knowledge of the tolerance levels of people and structures, safe distances are determined. These distances are based entirely on the estimated damage that could result from an incident, without considering probabilities or frequency of occurrence. Baker et al. (1975) present information on methods for predicting yields and blast behavior of propellant explosions. Baker et al. (1975 and 1978) and KHB 1710.2 present information on fragmentation effects from explosions.

6.11.2 Quantity-Distance Policy

The quantity distances are intended as a basic guide in choosing sites for hydrogen operations; they are based on the total quantity of propellants at a particular site and are intended to minimize damage to facilities and to protect personnel from injury.

A hazard analysis shall be performed for each facility system or subsystem. This analysis shall take into account the physical state of the hydrogen propellant (liquid or gas), whether oxidants are present in the system, and the quantities of propellants that could be involved.

The recommended separation distances shall be based on the references listed in the following section. Recommended distances may be impossible to achieve, but proper design can sometimes guarantee that only part of the total propellant supply or only one of the propellants will be involved in an accident.

6.11.3 Quantity Distances for Liquid and Slush Hydrogen

6.11.3.1 Quantity Distances Established for Two Different Situations

1. Storage of liquid or slush hydrogen, in which case the main hazards are pressure rupture, fragmentation, and gas-phase burning of hydrogen in air

5. Use of liquid hydrogen in propulsion test systems together with liquid oxidizers, in which case the main hazards are rapid combustion or detonation of liquid hydrogen-oxidizer mixtures

6.11.3.2 DOD Quantity Distances

The DOD classifies bulk liquid hydrogen storage as a Group III hazard. The Department of Defense manual 6055.9, Ammunition and Explosive Safety Standards, provides quantity-distance information and tables for liquid propellants. These are found in the NASA document NSS 1740.12, Safety Standard for Explosives, Propellants, and Pyrotechnics.

NOTE: *These tables apply only to liquid and slush propellants.*

NSS 1740.12, Table 7–5, Safe Quantity-Distance Relationships for LH2 Storage, page 7–12, gives not only the recommended quantity distances between bulk liquid hydrogen storage and compatible propellants but those between both unprotected and protected inhabited buildings, public traffic routes, and incompatible propellants. These distances provide reasonable protection from fragments of tanks or equipment that is expected to be thrown about should a vapor-phase explosion occur.

6.11.3.3 National Fire Protection Association (NFPA) Quantity distances for Bulk Liquid Hydrogen Storage

An alternate quantity-distance separation can be used, contingent upon Safety Branch approval, only for bulk liquid hydrogen storage as specified in NFPA 55, 2005, Standard for the Storage, Use, and Handling of Compressed Gases and Cryogenic Fluids in Portable and Stationary Containers, Cylinders, and Tanks. The stringent requirements of NFPA 55, Chapter 11, Liquefied Hydrogen Systems, and either CGA Pamphlet S 1.2, for mobile vessels, or S 1.3, for stationary vessels, must be met to use these distances. These values are predicated on the installation of a CGA S 1.2 or 1.3 sized emergency vent system that will prevent a storage vessel rupture even when the vessel is surrounded by fire.

The NFPA quantity distances do NOT apply to slush hydrogen.

6.11.3.4 Liquid Hydrogen Use With Oxidizers

When liquid hydrogen is used in conjunction with liquid oxidizers, such as oxygen or fluorine, as in rocket engine static test operations, the quantity distances are based on blast hazards. The total weight of propellants (fuel plus oxidizer) that could be involved in accidental release must be related to an equivalent amount of TNT or similar highly explosive material that would produce the same blast wave overpressure.

NSS 1740.12, Table 7–1, Equivalent Factors for Liquid Propellants, page 7–5, and Table 7–6, Space Distances for Separation of Propellant Static Testing, Launching, and Storage Sites From Other Facilities, Page 7–15, should be used to determine the blast hazard separation distances. For example, a given total quantity of liquid hydrogen plus liquid oxidizer, accidentally released, can be expected to produce a blast wave characteristic of some smaller amount

of a highly explosive material. To determine the equivalent amount of explosive, multiply the combined total weight of propellants by the explosive equivalent factor, and then use the results to determine the separation distance.

Distances to inhabited buildings and to public traffic routes for various quantities of equivalent propellant mixes and intraline distances (the distances to be maintained between similar propellant combinations within the facility complex) are given in NSS 1740.12, Table 7–6, Space Distances for Separation of Propellant Static Testing, Launching, and Storage Sites From Other Facilities, Page 7–15.

6.11.4 Mandated Quantity Distances for Gaseous Hydrogen

The installation and location of gaseous hydrogen systems, both fixed and tube trailer, shall conform to the requirements in NFPA 55, which shall be considered an integral part of this chapter.

Required quantity distances are based on the total volume of hydrogen involved. The location of a system shall be in the order of preference indicated in NFPA 55.

6.11.5 Fragmentation

Analytical predictions of fragment velocity distributions, fragmentation patterns, and lifting and rocketing fragment free-flight ranges are contained in 29 CFR 1910.95, Occupational Noise Exposure, and in Baker et al. (1974), Assembly and Analysis of Fragmentation Data for Liquid Propellant Vessels (These references describe methods for determining the effects of fragments on concrete and steel walls).

6.11.6 Need for Barricades

Barricades are often needed in hydrogen test areas to shield personnel, Dewars, and adjoining test areas from fragments. For maximum protection, barricades should be placed adjacent to the fragment source.

> ***NOTE:*** *A common misconception is that barricades significantly reduce the overpressures experienced at extended distances. Barricades serve only to stop fragments; after the blast wave passes the barricade, it re-forms with almost full strength.*

Barricades may be needed to isolate liquid hydrogen storage areas close to public property. In addition, they are needed to protect uncontrolled areas from the possible rupture and fragmentation of a storage Dewar and to protect the storage Dewars against vandalism.

For additional design information on barricades, see Section **6.5.9**. Also see Baker et al. (1978), Workbook for Estimating Effects of Accidental Explosions in Propellant Ground Handling and Transport Systems, and Chemical Propulsion Information Agency (CPIA) 394 VOL 1, Hazards of Chemical Rockets and Propellants.

6.12 Emergency Procedures (*ANSI/AIAA G–095–2004*)

6.12.1 Basic Guidelines

If an uncontrolled leak, fire, or other emergency occurs, first call 911 or using a cell phone, call 216–433–8888 at GRC or 419–621–3222 at Plum Brook Station. Specific actions are listed herein for emergencies such as leaks and spills, over pressurization, and transportation emergencies.

6.12.1.1 Leaks and Spills

Fire is the principal danger from a spill or leak. To help reduce the danger of fire, make sure that storage, transfer, and use areas are well ventilated and that ignition sources are avoided.

If a spill occurs, do not allow personnel or vehicles into the area affected by the spill. Completely rope off the area and post signs. If rope or signs are not available, station a person upwind to warn personnel.

6.12.1.2 Liquid

If a liquid leaks or spills from the piping of a vessel or pumping system, remotely shut off the source of supply. After the equipment or piping has been thoroughly vented and purged, the system can be disassembled and the leak repaired.

6.12.1.3 Gas

Gas leaks are more frequently heard than seen. As soon as leaks are detected, immediately stop operations, shut off the source of the supply, and relieve the line (or system) of any pressure. Resume operations only after the repairs are completed.

6.12.1.4 Accumulated Combustible Gas Mixture

If there is an accumulation of combustible gas in a test cell or area, do the following:

1. Evacuate the area. Personnel shall stay out of areas where there are combustible gases.
2. Shut off the gas and ventilate the area.
3. Assess the situation and, if necessary, actuate the emergency shutdown switch. All hydrogen test rigs using electrically actuated valves should have an emergency shutdown safety switch that drives system valves with known safe positions to their safest positions.
4. Do not actuate electrical or other devices having questionable nonsparking characteristics. Portable telephones and radios usually fall in this category. Metal dampers, sashes, doors, and such may create sparks when opened.
5. Call 911.

6.12.2 Controlling Leaks

Controllable leaks are relatively small leaks that do not result in a significant spill before block, shutoff, and relief valves can be enabled. Uncontrollable leaks are large and may cause major spills. In such circumstances, do the following:

1. Take actions to ensure the safety of personnel (i.e., take precautions against fires and explosions).
2. Call 911.
3. Evacuate the area within 500 feet (152 meters) of the spill source.
4. Cool down adjacent equipment to protect it from possible fire.

6.12.3 Hydrogen Gas Leaks From Cylinders

Only properly trained technicians shall be permitted to work on leaking hydrogen gas cylinders, and they shall use only approved solutions to test for leaks (e.g., Leak-tek). If a cylinder safety device leaks, no attempt should be made to tighten the safety device cap while the cylinder is under pressure. Follow this procedure:

1. SLOWLY empty the contents of the cylinder in a safe location.
2. Purge the cylinder with inert gas and sample for a safe level of GH2.
3. Remove the safety device cap and examine the condition of the threads.
4. Correct the damage.
5. Pressurize with inert gas and leak-test.

6.12.4 Slush Hydrogen Emergencies

The most significant hazard associated with slush hydrogen is the intrusion of air into the hydrogen storage vessel. The emergency procedures that apply to liquid hydrogen apply for slush hydrogen use (see Section **6.12.1**). Special additional emergency procedures for slush hydrogen air intrusion problems are detailed in ANSI/AIAA G–095–2004.

6.12.5 Transportation Emergencies

6.12.5.1 Tanker Hazards

Hazards can occur in transporting liquid hydrogen by highway tanker. Some of the likely places and causes are

- During tanker preparation, testing, and filling at the producer's site

- During delivery of cargo at the user's site or preparation of the tanker for return
- Resulting from vehicle malfunction, road conditions, traffic situations, or driver error
- Resulting from cargo leakage en route
- Resulting from vehicle mishaps leading to cargo leakage or spillage

6.12.5.2 Emergency Procedures

1. In the event of a transportation emergency, the first concern shall be to prevent death or injury; therefore, try to get the Dewar off the road, preferably to an open location if possible. Shut off the tractor-trailer electrical system, post warning lights and signs, and keep people at least 500 feet (152 meters) away.
2. Do not try to put out a hydrogen fire while it is still being supplied with hydrogen. For vent fires, initiate a helium gas stack purge prior to attempting to slowly shut off the hydrogen gas supply. For vent stack and other fires, it would be prudent to depressurize the vessel and shut down the pressure buildup coil. If a water hose is available, use it to keep metal parts cool until the fire burns itself out. Be careful when using water: do not to allow water to get down the vent stack because ice formation may take place and plug the vent. For tractor fires, a fire extinguisher should be used to put out engine, tire, or electrical fires that are not fed by hydrogen.
3. If there is no fire, fog may be visible near a cold leak. Stop or minimize the leak if it can be done safely. Remove all ignition sources. Since a flammable mixture may exist when fog is visible, and sometimes beyond the visible cloud, do not deliberately flare hydrogen leaks.

6.12.5.3 Communications

A tractor-trailer transporting liquid hydrogen should be equipped with a radio or telephone to allow the driver to communicate immediately any difficulty. If physically able, the driver should remain in the general vicinity of the vehicle at all times. The first priority is reduction of any risk to the lives of emergency personnel and bystanders. The following information is important:

- Drivers should be trained to take prompt protective measures and to be aware of the aid they can obtain from the Chemical Transportation Emergency Center (CHEMTREC) and other emergency information systems.
- The toll-free CHEMTREC telephone number is 800–424–9300.
- Other emergency information sources include the Dow Chemical USA Distribution Emergency Response System (telephone 517–634–4400) and the Union Carbide Corporation Hazardous Emergency Leak Procedure (HELP), which provides information 24 hours a day. The HELP telephone number is 304–744–3487.

6.12.5.4 Major Accidents

1. If a major accident makes it impossible to move the Dewar off the road, post warnings and keep people away. Notify authorities first, and then notify home base. Keep ALL people, including firefighters, at a safe distance; an explosion could occur.
2. If there is a large hydrogen fire in which the source of hydrogen cannot be shut off, do not allow firefighters to extinguish it. Have them use water streams from a safe distance to cool the container and surrounding equipment and to put out secondary fires.
3. If there has been major damage to the vacuum shell or vent system, pressure may build up and cause the liquid hydrogen container to rupture explosively. Vacate the area and keep people at least 500 feet (152 meters) away. If the surface of the inner vessel or insulation is exposed, do not apply water; this acts as a heat source to the much colder hydrogen and aggravates the boiloff.
4. If frost spots appear on the outer jacket, liquid hydrogen may be contacting the jacket, which is usually made of carbon steel. This metal becomes brittle when cold and should not be struck or shocked, since it could break.

6.12.5.5 Overturned Trailers

If an accident occurs in which the trailer is overturned, follow these procedures:

1. Request the aid of the local police and fire departments by dialing 911.
2. Seek assistance from anyone to stop traffic and evacuate the area. Do not use flares to alert or control traffic; traffic should be detoured.
3. Do not perform any procedures on an overturned trailer unless they are well thought out before action is taken. This activity carries a very high risk.
    a. In the overturned trailer, the ullage space and the venting and pressure-relief devices are exposed to the liquid. It is possible, however, to reduce the tank pressure by venting gas through lines normally used for liquid flow.
    b. The detailed liquid hydrogen tanker piping schematics indicate the lines and valves that allow such an operation.
4. Vent the trailer, if necessary, but only after consultation with the home office.

6.12.5.6 Emergency Venting

1. DOT regulations require the driver to avoid unnecessary delays during transportation. The pressure in the sealed Dewar must be monitored. If it shows signs of approaching the relief valve setting, the truck must be driven to a remote and safe location and the pressure must be reduced through the manual blowdown valve. Observe the rate of pressure rise, and plan manual venting operations for the daylight hours, if possible.
2. Repeated emergency venting during transport is unusual; however, if it is necessary, do not proceed on the established route, but drive the tanker to a safe, open off-the-road area that is clear of power lines, buildings, and people. In choosing an area, consider the wind direction so that vented gas will be carried away safely.
3. Liquid hydrogen trailers are equipped with at least two safety valves. If the road safety valve relieves, pull off the road, and then either
    a. Let the road safety valve relieve until it reseats or
    b. Use the tank operating vent valve to reduce the pressure
4. Regardless of the method used, the tank should be vented as soon as possible to less than 25 psia (172 kilopascals). Before returning to the highway, reconnect the tank to the road safety valve. The information required for selecting either of the two safety valves should be on the trailer schematic located on the trailer operating cabinet door.

6.12.5.7 Faulty Relief Valves

Make no attempt to repair a relief valve leak while the valve is exposed to the tank pressure because such procedures are hazardous. Special methods have been developed for replacing relief valves when the trailers are loaded with liquid hydrogen; however, such operations should be performed under the direction of a qualified pressure system mechanic.

6.12.5.8 Rupture Disk Failure

Procedures for handling rupture disk failure depend on the type of disk on the trailer.

6.12.5.9 Single Disk

Many trailers have one rupture disk whose replacement requires that specific detailed procedures be carried out in a remote area, that firefighting equipment be present, and that protective clothing be worn.

6.12.5.10 Dual-Rupture Disk Assembly

If the trailer is equipped with a dual-rupture disk assembly, the driver must be familiar with the type of three-way valve used to switch to the other rupture disk. The gas flow should stop when the switch to the new disk is completed. The ruptured disk should be replaced as soon as possible.

6.12.6 Assistance in Emergencies

Responsible test site and safety personnel shall monitor hydrogen operations to ensure that all safety precautions are taken during transfer, loading, testing, and disposal operations. In any emergency, assistance should be available from knowledgeable safety-trained personnel, including plant security, the Safety Branch emergency response and site personnel.

Site personnel trained in handling specific mishaps and accidents should be assigned definite tasks to perform in an emergency. The test site senior operations engineer should assign these tasks.

6.12.7 Firefighting Techniques

> ***Caution:*** *Only highly trained firefighting and certified technical professionals should engage in this team activity.*

Training personnel can prevent catastrophic results of fires. Should a hydrogen fire occur, follow these procedures:

1. Prevent the fire from spreading and let it burn until the hydrogen is consumed (Use water to keep adjacent equipment cool, not to arrest the fire).
2. Be aware that if the fire is extinguished without stopping the hydrogen flow, an explosive mixture may form, causing a more serious hazard than the fire itself.
3. Firefighting professionals need to exercise extreme caution in fighting fires involving hydrogen. In the event of a test facility fire, the fire fighting should be under the joint direction of the senior professional fire fighting officer and the senior test site engineer.

6.12.7.1 Liquid Hydrogen Fire Scenario

The following are descriptions of the initial and final phases of a liquid hydrogen fire.

6.12.7.2 Initial Phase of Fire

When a storage tank ruptures, flames will occupy the volume around the ruptured tank. Spills of a few hundred gallons may cause a flash hot-gas ball about 50 feet (15.l2 meters) in radius. Wind may change the shape to an ellipsoid almost entirely downwind of the rupture. Flame temperature will be approximately 3800 °F (2370 K). Large amounts of liquid hydrogen will flash into vapor.

The hot-gas ball will radiate, but more slowly than in gasoline-air fires. Radiation effects on adjacent vessels and lines should not be severe, especially if they have reflective painting or surfaces.

Detonation of hydrogen-air mixtures in unconfined spaces is unlikely. However, the rapid burning of the initial cloud produces pressure waves that are sometimes strong enough to damage structures and injure personnel.

6.12.7.3 Final Phase of Fire

Because hydrogen fires are invisible and radiate less than ordinary fires, their presence is not as easily detected. The invisible flame may be many feet long and shift quickly with the slightest breeze. Therefore, personnel should wear protective clothing when fighting hydrogen fires.

Note: When entering an area where a hydrogen fire is suspected, the use of a broom held out at arm's length with bristles forward has proven to be a safe method of detecting small fires.

The only sure way of handling a hydrogen fire is to let it burn under control until the hydrogen flow can be stopped. If the hydrogen fire is extinguished and the hydrogen flow is not stopped, a hazardous combustible mixture begins to form immediately. It is very possible for the mixture to ignite with an explosion, causing more damage and restarting the fire.

The block or isolation valves located close to the hydrogen container should be closed by remote operations from a safe distance outside the local hazard area.

Although the hydrogen fire should not be extinguished until the hydrogen flow can be stopped, water sprays should be used to extinguish any secondary fire and to keep the fire from spreading.

- The hydrogen-containing equipment should be kept cool with water sprays to decrease the rate of hydrogen leakage and to prevent further heat damage. However, if the inner surface is exposed, water should not be applied.
- Some pressure-relief devices have frozen shut from water spray during liquid hydrogen fire fighting activities. Great caution must be exercised in using water since a frozen relief device can lead to vessel rupture.

Remotely controlled water spray equipment, if it has been installed, should be used instead of hoses to cool equipment and to reduce the spread of the fire. If it is necessary to use hoses, those using them should stay behind protective structures.

It is permissible to use carbon dioxide in the presence of hydrogen fires.

6.12.7.4 Gaseous Hydrogen Fire Scenario

Gaseous hydrogen fires are not generally extinguished until the supply of hydrogen has been shut off because of the danger of reignition or explosion. Hydrogen systems should be designed to allow the gas flow to be stopped. In a fire, water should be sprayed on adjacent equipment to cool it. Fog and solid stream nozzles are the most adaptable in controlling fires. In dealing with hydrogen cylinder fires, proceed as follows:

1. Do not try to put out a fire unless the cylinder is out in the open or in a well-ventilated area free of combustibles and ignition sources. Extreme care should be taken in attempting to extinguish the fire. The process may create a mixture of air and escaping hydrogen that, if reignited, may explode.
2. Do not attempt to remove the burning cylinder but keep it and any surrounding cylinders and combustibles cool by spraying them with water.
3. If a group of cylinders is burning, it is extremely important that the persons fighting the fire be at as great a distance from the fire as practicable and be protected against the possibility of flying debris. The efforts of firefighters in such instances should be divided between keeping the cylinders cool and preventing adjacent equipment and buildings from catching fire.

6.12.8 Protection from Exposure to Fire

Fires can damage objects by heat fluxes transmitted by radiation and convection. Radiation is a significant component of heat flux in hydrogen fires.

Water molecules are responsible for much of the infrared radiation from the hydrogen flame; therefore, atmospheric water vapor is very effective in absorbing this radiation. For example, a 1-percent concentration of water vapor in the atmosphere (corresponding to a relative humidity of about 43 percent at ambient temperature) will reduce the radiation flux at least 2 orders of magnitude at a distance of 328 feet (100 meters).

Water spray/mist is an effective means for attenuating radiation from a hydrogen flame.

Comparisons of hydrogen fires with hydrocarbon fires show that, although smoke inhalation danger is lower with hydrogen fires, it remains a major cause of injuries and deaths in a hydrogen fire due to the burning of other nearby combustible material.

Safe limits for thermal-radiation-flux exposure levels for personnel and equipment cover a wide range and are listed in the appendix of ANSI/AIAA G–095–2004, Guide to Safety of Hydrogen and Hydrogen Systems.

6.13 Transportation of Hydrogen (*ANSI/AIAA G–095–2004*)

Safety of personnel and facilities while hydrogen is being transported requires adherence to accepted standards and guidelines as well as mandatory compliance with existing regulatory codes.

6.13.1 Codes and Regulations

Various industrial and government organizations have published standards and guidelines for facility construction and for safe procedures to be followed in the various phases of producing, handling, transporting, and using cryogenic fluids. Regulatory bodies such as the DOT, which includes the Federal Aviation Administration (FAA), the U.S. Coast Guard, and the Office of Hazardous Materials Transportation, have adapted pertinent published guidelines. DOT regulations, Title 49, Code of Federal Regulations, and Parts 100 to 185 designate the rule-making and enforcement bodies of the DOT.

Transport Dewars are to be marked in accordance with DOT regulations with both of the following legends: "FLAMMABLE GAS" and "LIQUID (or GAS) HYDROGEN," as appropriate.

6.13.2 Loading Area Requirements

Liquid hydrogen is delivered to GRC facilities in tanker trailers. The contracts for supplying hydrogen state that personnel involved in the handling, transportation, and storage of hydrogen must be given appropriate safety training.

The safety operating procedures included in the safety documents at Glenn will be rigidly followed to protect personnel. Emergency procedures shall be detailed in the standard operating procedures of the applicable operating organization. Other requirements are as follows:

1. No flame-producing devices shall be located within the control area. Spark-producing and electrical equipment that is within 25 feet (7.6 meters) of the operation and is not hazard-proof shall be turned off and locked out. All tools used shall be in accordance with established safety procedures.
2. The transfer and control areas must remain clear of personnel not directly involved in the operation. Loading and transfer of liquid or gaseous hydrogen should not begin during an electrical storm and, if underway, should be discontinued if a storm comes within 5 miles (8.05 kilometers) of the operation.
3. In liquid hydrogen trailer transfer
   a. There shall be no smoking or open flames within 150 feet (45 meters) of the loading or unloading of liquid hydrogen trailer.
   b. The tractor ignition switch and light circuit must be turned off during loading and unloading operations.
   c. When the tractor is parked, the trailer wheel chocks must be in place with the emergency brakes set. Prior assurance checks of the area grounds, ground cable, and attachment fixture should be facilitated as identified in Section **6.7.3.5** (every 6 months minimally). Prior to the static ground attachment, a hand held hydrogen detector shall be used to check for presence of hydrogen in the immediate area of operation.
   d. Before the trailer is used, all external or associated systems should be inspected (e.g., for cold spots on vacuum jackets or visible leakage).
4. If a leak develops, the transfer must be stopped and the leak repaired. If a hydrogen fire occurs, the hydrogen sources must be closed as quickly as possible.
5. Before any type of maintenance is performed, the system shall be depressurized and all liquid hydrogen lines disconnected, drained, vented, and purged; the operations area inspected; and the security of all systems verified.
6. The atmosphere must be free of hydrogen in the air before motor vehicles are permitted to operate within the control transfer area. At a hydrogen alarm level of 20 percent of the lower explosive limit, vehicles shall be shut off, and personnel shall immediately leave the area of high hydrogen concentration.
7. All transport Dewar inlets and outlets, except safety relief devices, should be marked to designate whether they are covered by vapor or liquid when the tank is filled to the maximum permitted level. This is a DOT marking requirement.
8. Each cargo tank must be protected by a primary system of one or more spring-loaded, pressure-relief valves and by a secondary system of one or more rupture disks arranged to discharge upward and unobstructed to

the outside of the protective housing. The rated capacity of each pressure-relief device must be set in accordance with CGA Pamphlet S 1.2.

6.13.3 Mandatory Transport Regulations

The following is a sample of mandatory regulations for safe tractor-trailer transportation of liquid hydrogen:

1. Drivers shall be required to successfully complete the training and certification programs provided by the supplier. These programs should include instructions about the nature of loading and the procedures to be followed in an emergency.
2. Two drivers are to be assigned when normal driving time exceeds 10 hours between the point of origin and the destination or between driver relay points.
3. The maximum allowable travel time, the pressure used to determine the marked rated holding time (MRHT), and the appropriate filling density must be marked on the right side of the cargo tank near the front, in accordance with 49 CFR, Parts 100 to 185. The one-way travel time is derived from the MRHT of the cargo tank for liquid hydrogen at the pressure and filling density (in percent) marked on the tank.
4. The trailer shall be equipped with a spring-loaded, fail-safe emergency brake system.
5. The trailer shall be equipped with a dry chemical fire extinguisher. The rating should not be less than Underwriter's Laboratory and NFPA Codes of 10 BC; some special permits require a rating of 20 BC.
6. Each tanker must have an installed brake interlock switching system that ties the tank venting system to the brake system of the trailer. The objective of such a control is to permit venting of the tanker when it is in a controlled park position. For the trailer to be moved without venting, the brake switch position must be moved from park to drive.

7.0 RECORDS

- Pressure Systems Office (PSO) certification documents (all maintained by the PSO)
- Nondestructive examination (NDE) reports
- Risk assessment report
- System certification report
- Pressure system database

7.1 NASA C–Forms (all maintained by the PSO)

Form number	Form name
C–83	Safety Variance Request
C–83A	Safety Variance Change Request
C–802	Pneumatic Test Request
C–804	Pneumatic Test Permit
C–4026	Pressure Vessel Pneumatic Test Checklist
C–4010	Pressure Vessel Pneumatic Test Report
C–4020	Piping System Pneumatic Test Checklist
C–4014	Piping System Pneumatic Test Report
C–4022	Pressure Vessel Hydrostatic Test Checklist
C–4016	Pressure Vessel Hydrostatic Test Report
C–4018	Piping System Hydrostatic Test Checklist
C–4012	Piping System Hydrostatic Test Report

C–4027	Standard Exclusion Request
C–4025	Weld Request Form

8.0 REFERENCES

8.1 Tables Referenced in Text (see given reference document)

- A Selection of Recommended Materials for Typical Applications, Table A5.2, ANSI/AIAA G–095–2004, Guide to Safety of Hydrogen and Hydrogen Systems, page 152.
- Safe Quantity-Distance Relationships for LH2 Storage, Table 7–5, NSS 1740.12, Safety Standard for Explosives, Propellants, and Pyrotechnics, page 7–12.
- Explosive Equivalent Factors for Liquid Propellants, Table 7–1, NSS 1740.12, Safety Standard for Explosives, Propellants, and Pyrotechnics, page 7–5.
- Space Distances for Separation of Propellant Static Testing, Launching, and Storage Sites From Other Facilities, Table 7–6, NSS 1740.12, Safety Standard for Explosives, Propellants, and Pyrotechnics, page 7–15.

8.2 Other

Document number	Document name
ANSI/AIAA G–095–2004	Guide to Safety of Hydrogen and Hydrogen Systems.
ANSI/ISA RP12.06.01–2003	American National Standards Institute/Instrument Society of America. Wiring Practices for Hazardous (Classified) Locations Instrumentation, Part 1: Intrinsic Safety.
ASME B16	American Society of Mechanical Engineers. 2003: Pipe Flanges and Flanged Fittings.
ASME B31.12	American Society of Mechanical Engineers. 2008: Hydrogen Piping and Pipelines.
NFPA 55, 2005	National Fire Protection Association. Standard for the Storage, Use, and Handling of Compressed Gases and Cryogenic Fluids in Portable and Stationary Containers, Cylinders, and Tanks.
NFPA 68, 2002	National Fire Protection Association. Guide for Venting of Deflagration.
NFPA 496, 2003	National Fire Protection Association. Purged and Pressurized Enclosures for Electrical Equipment.
ASME B&PV Code	Section V, Nondestructive Examination.
ASME B&PV Code	Section VIII, American Society of Mechanical Engineers. 2001: Division 1 Rules for the Construction of Pressure Vessels.
ASME B&PV Code	Section IX, American Society of Mechanical Engineers. 2001: Qualification Standard for Welding and Brazing Procedures, Welders, Brazers, and Welding and Brazing Operators.
ASTM F310, 2004	Standard Practice for Sampling Cryogenic Aerospace Fluids.
NASA CR–134538	Baker, W.E., et al. 1974: Assembly and Analysis of Fragmentation Data for Liquid Propellant Vessels.
NASA CR–134906.1975	Workbook for Predicting Pressure Wave and Fragment Effects of Exploding Propellant Tanks and Gas Storage Vessels.
NASA CR–3023.1978	Workbook for Estimating Effects of Accidental Explosions in Propellant Ground Handling and Transport Systems.

NASA SP–3072.	Bankaitis, H.; and Schueller, C.F. 1972: ASRDI Oxygen Technology Survey, Vol. II: Cleaning Requirements, Procedures, and Verification Techniques.
NSA TM–X 52454	Belles, F.E. 1968: Hydrogen Safety Manual..
CGA Pamphlet G–5	Compressed Gas Association, Inc. 2005: Hydrogen.
CGA Pamphlet G–5.4	Compressed Gas Association, Inc. Standard for Hydrogen Piping Systems at Consumer Locations.
CGA Pamphlet G–5.5	Compressed Gas Association, Inc. Hydrogen Vent Systems.
CGA Pamphlet P–1	Compressed Gas Association, Inc. 2000: Safe Handling of Compressed Gases in Containers.
CGA Pamphlet S 1.2, ED7	Compressed Gas Association, Inc. 2003: Pressure Relief Device Standards, Part 2: Cargo and Portable Tanks for Compressed Gases.
CGA Pamphlet S 1.3, ED6	Compressed Gas Association, Inc. 2003: Pressure Relief Device Standards, Part3: Stationary Storage Containers for Compressed Gas.
NASA SP 5032	Cloyd, D.R.; and Murphy, W. J. 1965: Handling Hazardous Materials: Technology Survey.
CPIA 394 VOL 1	Chemical Propulsion Information Agency. 1984: Hazards of Chemical Rockets and Propellants, Vol. 1: Safety, Health, and the Environment. J.A.E. Hannum, ed. Johns Hopkins University, Silver Spring, MD.
CPIA 394 VOL 3	Chemical Propulsion Information Agency. 1985: Hazards of Chemical Rockets and Propellants, Vol. 3: Liquid Propellants, J.A.E. Hannum, ed., Johns Hopkins University, Silver Spring, MD.
CPIA/M4	Chemical Propulsion Information Agency. 2001: Liquid Propellant Manual.
DOD–6055.9–STD	Department of Defense. 1999: DOD Ammunition and Explosives Safety Standards.
	Huber, G., et al. 1992: The Development and Use of Hydrogen-Air Torches in PSL 4.
KHB 1700.7, 45 SPW HB S–100	KSC Space Transportation System Payload Ground Safety Handbook, Revision B. 4.3 Payloads and Ground Support Equipment (GSE).
KSC STD E 002	NASA Kennedy Space Center. 1998: Standard for Hazard Proofing of Electrically Energized Equipment.
KSC STD E 0012	NASA Kennedy Space Center. 2000: Facility Grounding and Lightning Protection Standard.
	McCarty, R.D. 1975: Hydrogen Technology Survey: Thermophysical Properties. NASA SP–3089.
	McCarty, R.D., et al. 1981: Selected Properties of Hydrogen (Engineering Design Data). Report NBS MN 168, National Bureau of Standards.
MIL PRF 27201	Department of Defense. 1995: Propellant Hydrogen.
ECSS–Q–70–01	Cleanliness and Contamination Control, Revision A , 2002.
NFPA 68	National Fire Protection Association. 2002: Guide for Venting of Deflagrations.
NFPA 70	National Fire Protection Association. 2005: National Electric Code.
NFPA 780	National Fire Protection Association. 2000: Standard for the Installation of Lightning Protection Systems.

NFPA 385	National Fire Protection Association. 2000: Standard for Tank Vehicles for Flammable and Combustible Liquids.
NPR 8715.3	NASA General Safety Program Requirements. http://www.hq.nasa.gov/office/codeq/doctree/87105.htm
NASA STD 8719.17	NASA Requirements for Ground Based Pressure Vessels and Pressurized Systems (PV/S). http://www.hq.nasa.gov/office/codeq/doctree/871917.pdf
NPD 8710.5	NASA Safety Policy for Pressure Vessels and Pressurized Systems. http://www.hq.nasa.gov/office/codeq/doctree/87105.htm
NASA STD 8719.11, 2000	Safety Standard for Fire Protection.
NASA TM 88882	Repas, G.A. 1986: Hydrogen-Air Ignition Torch.
NASA CR 155743	Roder, H.M. 1977: The Thermodynamic Properties of Slush Hydrogen and Oxygen.
NASA CR 134779	Strehlow, R.A.; and Baker, W.E. 1975: The Characterization and Evaluation of Accidental Explosions. UILU ENG 75 0503, Illinois University.
29 CFR 1910.103	Occupational Safety and Health Administration, Hydrogen.
49 CFR	Department of Transportation (DOT). http://www.access.gpo.gov/nara/cfr/waisidx_03/49cfr172_03.html

APPENDIX A.—DEFINITIONS AND ACRONYMS

Adiabatic compression.—Compression of a gas in an adiabatic system. Since energy cannot be transferred to or from the surroundings in an adiabatic system, the compressional energy increases the energy (temperature) of the compressed gas.

American Institute of Aeronautics and Astronautics (AIAA)

American National Standards Institute (ANSI)

American Society of Mechanical Engineers (ASME)

American Society of Testing Materials (ASTM)

Authority having jurisdiction (AHJ)

Autogenous ignition.—The phenomenon in which a mixture of gases or vapors ignites spontaneously with no external ignition source. It is frequently called "autoignition" or "spontaneous ignition."

Auto ignition temperature.—The lowest temperature at which a fuel in contact with air or an oxidizer will self-heat to ignition without an external ignition source. The autoignition temperature for a monopropellant is the temperature at which it will self-heat to ignition in the absence of an oxidizer.

Blast wave.—A shock wave in air, caused by the detonation of explosive material.

Blast yield.—Energy released in an explosion. The amount of energy is inferred from measurements of the characteristics of blast waves generated by the explosion.

Burn velocity.—The propagation velocity of a flame through a flammable mixture. Burning velocities are absolute velocities measured relative to the velocity of the unburned gas; flame velocities are measured in laboratory coordinates and are not absolute.

Chemical Propulsion Information Agency (CPIA)

Code of Federal Regulations (CFR)

Combustion wave.—A zone of burning that propagates through a combustible medium and is capable of initiating chemical reaction in the adjacent unburned combustible layers.

Compressed Gas Association (CGA)

Critical diameter.—The minimum diameter required for a tube to produce a stable spherical detonation into an unconfined environment. This term is sometimes used by other authors to describe the minimum tube diameter for propagation of a flame or of a detonation confined in the tube.

Deflagration.—A rapid chemical reaction in which the output of heat is enough to enable the reaction to proceed and accelerate without input of heat from another source. Deflagration is a surface phenomenon in which the reaction products flow away from the unreacted material along the surface at subsonic velocity. The effect of a true deflagration under confinement is an explosion. Confinement of the reaction increases pressure, rate of reaction, and temperature and may cause transition into a detonation.

Department of Transportation (DOT)

Detonation.—A violent chemical reaction of a chemical compound or mechanical mixture in which heat and pressure are emitted. A detonation is a reaction that proceeds through the reacted material toward the unreacted material at supersonic velocity. As a result of the chemical reaction, extremely high pressure is exerted on the surrounding medium, forming a propagating shock wave that originally is of supersonic velocity.

Detonation cells.—The cellular pattern left on a soot-coated plate by a detonation wave. The dimensions of a single cell (length and width) can be used to predict detonation limits and critical diameters.

Detonation limits.—The maximum and minimum concentrations of vapor, mist, or dust in air or oxygen at which stable detonations occur. The limits are controlled by the size and geometry of the environment as well as by the concentration of the fuel. "Detonation limit" is sometimes used as a synonym for "explosive limit."

Detonation wave.—A shock wave that is sustained by the energy of a chemical reaction initiated by the temperature and pressure in the wave. Detonation waves propagate at supersonic velocities relative to the unreacted fluid.

Diffusion coefficient.—The mass of material diffusing across a unit area in unit time at a unit concentration gradient.

Electrical arc/spark test.—Method of determining the susceptibility of metals to ignition in oxygen by using an electrical arc or spark. Arc energy input and oxygen pressure are the major variables.

Explosion.—The sudden production of a large quantity of gas or vapor, usually hot, from a smaller amount of a gas, vapor, liquid, or solid. An explosion may be viewed as a rapid equilibration of a high-pressure gas with the environment; the equilibration must be so fast that the energy contained in the high-pressure gas is dissipated as a shock wave. Depending on the rate of energy release, an explosion can be categorized as a deflagration, a detonation, or pressure rupture.

Explosive limits.—The maximum and minimum concentrations of vapor, mist, or dust in air or oxygen at which explosions occur. The limits are controlled by the size and geometry of the environment as well as by the concentration of the fuel. “Detonation limit” is sometimes used as a synonym for “explosive limit.”

Explosive reaction.—A chemical reaction wherein any chemical compound or mechanical mixture, when ignited, undergoes a very rapid combustion or decomposition, releasing large volumes of highly heated gases that exert pressure on the surrounding medium; a mechanical reaction in which failure of the container causes the sudden release of pressure from within a pressure vessel.

Explosive yield.—The amount of energy released in an explosion. Explosive yield is often expressed as a percent or fraction of the energy that would be released by the same mass of a standard highly explosive substance such as TNT.

Flammability limits.—The maximum and minimum concentrations of a fuel (gas or vapor) in an oxidizer (gas or vapor) at which flame propagation can occur.

Free air or free gas (STP).—Air or gas measured at a temperature of 60 °F (15.6 °C) and a pressure of 14.7 psia (101.4 kPa).

Glenn Research Center (GRC)

Hazardous (classified) location.—A location where fire or explosion hazards may exist because of flammable gases or vapors, flammable liquids, combustible dust, or easily ignitable fibers or flyings.

Ignitable mixture.—A mixture that can propagate a flame away from the source of ignition.

Ignition energy.—The amount of energy needed to initiate flame propagation through a combustible mixture. The minimum ignition energy is the minimum energy required for the ignition of a particular flammable mixture at a specified temperature and pressure.

Ignition temperature.—The temperature required to ignite a substance by using an ignition source such as a spark or flame.

Intrinsically safe system.—A circuit in which any spark or thermal effect is incapable of causing ignition of a mixture of flammable or combustible material in air under prescribed test conditions and which may be used in hazardous NEC-classified locations.

Lower explosive limit (LEL).—The minimum concentration of a combustible/flammable gas or vapor in air (usually expressed in percent by volume at sea level) that will explode if an ignition source is present.

Lower flammable limit (LFL).—The minimum concentration of a combustible/flammable gas or vapor in air (usually expressed in percent by volume at sea level at temperatures up to 121° C) that will ignite if an ignition source is present.

NASA Policy Directive (NPD)

NASA Procedural Requirement (NPR)

NASA Safety Standard (NSS)

NASA Safety Training Center (NSTC)

National Electric Code (NEC)

National Fire Protection Association (NFPA)

Pressure Systems Office (PSO)

Plum Brook Station (PBS)

Pressure vessels and pressurized systems (PV/S)

R.—Rankine temperature scale, 0 R is absolute zero or –459.67 °F; one degree Rankine equals one degree Fahrenheit**.**

Safety, Health and Environmental division (SHED)

Shock wave.—A surface or sheet of discontinuity set up in a supersonic field of flow, through which the fluid undergoes a finite decrease in velocity accompanied by a marked increase in pressure, density, temperature, and entropy, as occurs in a supersonic flow about a body.

Stoichiometric combustion.—The burning of fuel and oxidizer in the exact proportions required for a complete reaction to give a set of products.

Unconfined vapor cloud explosion.—Explosion that results from a quantity of fuel having been released to the atmosphere as a vapor or aerosol, mixed with air, and then ignited by some source.

Vapor explosion.—A shock wave produced by the sudden vaporization of a superheated liquid coming into contact with a cold liquid.

APPENDIX B.—RECOMMENDED PROCEDURES FOR GASEOUS HYDROGEN TUBE TRAILERS

B.1 Operational Requirements

- Only qualified operators are to perform transfers.
- While in storage or transport, a properly secured tube trailer shall have all valves in the closed position and the tailpieces and sample port capped.
- A two-man buddy system shall always be in place. (see Chapter **22**, The Glenn Buddy System, and Section **6.9.2**, Requirements for Personnel) for further in-depth information.

  CAUTION: *Eliminate all potential ignition sources from the area.*

B.2 Tube Trailer Fill

1. Ground the trailer at the connector on the bumper. Make certain that there is a proper ground.
2. Open and secure trailer doors with the latches provided.
3. Chock/block trailer wheels. Also place at the front of the trailer a cone or stand with sign indicating that the trailer is connected to the manifold.
4. Put up the required barricades and signs.
5. Open the gauge isolation valve to ensure that the supply manifold has maintained pressure and is leak free. (If the manifold has leaked to atmospheric pressure, cease operations and contact the cryogenic maintenance COTR for proper evaluation and repair.)
6. Leak-check the trailer manifold piping (use Leak-tek and/or hand-held analyzer).
7. Connect an approved transfer hose to the fill tailpiece and supply-side fitting (maintain cleanliness of caps).
8. Secure the transfer hose restraining cables to the eyelets provided.
9. Open all tube isolation valves.
10. Vacuum evacuate or purge the transfer line as specified in the area where the fill or cascade is being accomplished. Leak-check the hose connections prior to completing the purge.
11. After the transfer hose has been purged and checked, stand clear of the transfer hose and slowly open the trailer-mounted manual fill valve.
12. Require personnel to stand clear of transfer hose, then slowly open the main gas supply isolation fill valve (from source) to fill the trailer.

B.3 Post-Fill Shutdown

1. Close the main gas supply isolation valve (from source) to begin shutdown and disconnect operations.
2. Close the trailer manual fill valve.
3. Purge and vent the transfer hose to atmospheric pressure as specified in the area of use.
4. Disconnect the transfer hose restraining cable from trailer side.
5. Remove the transfer hose from the trailer and cap the hose and tailpiece ports.

   NOTE: *If a sample is required, follow the checksheet procedures as provided by the Chemical Analysis Branch. (Draw sample gas from the sample panel only.)*
6. Close all tube isolation valves (transfer is complete).
7. Remove the ground and close the doors prior to moving the trailer.
8. Remove barricades, warning signs, and wheel chocks.

B.4 Tube Trailer Withdrawal

1. Ground the trailer at the connector located on the bumper. Make sure that the ground has been checked.
2. Open and secure the trailer doors.
3. Chock/block trailer wheels. Also place at the front of the trailer a cone or sign indicating trailer is connected to the manifold.
4. Put up the required barricades and signs.
5. Open the gage isolation valve to ensure that the supply manifold has maintained pressure and is leak free.
6. Connect an approved transfer hose to the trailer withdrawal tailpiece and receiving station.
7. Secure the transfer hose restraining cables to the eyelets provided.
8. Open all trailer tube isolation valves.
9. Leak-check the trailer manifold piping.
10. Open receiving station main isolation valve.
11. Pressure-purge the transfer hose assembly and maintain 40 to 100 psi in transfer lines.
12. Leak-check transfer hose connections.
13. Partially open trailer manual withdrawal valve.
14. Withdraw personnel from area of transfer hoses.
15. Open the trailer emergency shutoff valve from the remote location.
16. Allow H2 receiving station pressure to reach trailer pressure; then close the trailer emergency shutoff valve.
17. Leak-check transfer hose connections.
18. Fully open trailer manual withdrawal valve.
19. Open the trailer emergency shutoff valve from the remote location to withdraw hydrogen for use.

B.5 Post-Withdrawal Shutdown

1. From the remote location, close the emergency shutdown valve.
2. Vent and purge the transfer hose to atmospheric pressure, as specified in the area of use.
3. Close the manual withdrawal valve on the trailer.
4. Close the receiving station main isolation valve to begin securing the system after use.
5. Disconnect the transfer hose restraining cable.
6. Remove the transfer hose from the trailer, and cap the hose and tailpiece ports.
7. Close all tube isolation valves (the trailer is secure).
8. Remove barricades, warning signs, and wheel chocks.
9. Prior to relocating trailer, remove ground and close and secure trailer doors.

APPENDIX C.—CLEANING HYDROGEN SERVICE SYSTEMS

C.1 Contamination Control

- Cleaning procedures shall be established and effective contamination controls developed to maintain the required cleanliness level for hydrogen systems.
- Contamination of liquid hydrogen by solid air or oxygen-enriched air has resulted in serious explosions. Liquid hydrogen exposed to air can form slurries of solid oxygen and nitrogen that tend to be richer in oxygen than in air. These slurries can form explosive mixtures that can detonate with effects similar to those of TNT or other highly explosive materials.
- Solid contaminants should be held to a minimum because they can contribute to the generation of static electricity in flowing systems. Explosions have occurred in filters contaminated with solid air; therefore, filter elements in liquid hydrogen servicing systems should be regenerated well before their capacity is reached. The warmup and purge of liquid hydrogen transfer systems usually regenerates the filters.
- An effective control program must specify the degree of cleanliness, materials, and configuration required. Gross cleaning procedures (blast, mechanical, washing) should be followed by precision cleaning methods (vapor, degreasing, and ultrasonic). Suitable cleaning agents and methods for verifying surface cleanliness should be identified. Contaminants in liquid and gaseous hydrogen systems must be kept under control, and personnel must be trained to ensure control is maintained.
- All storage, transfer, and system components must be completely clean before being placed in service.
- Liquid hydrogen systems must be free of any surface film, oxidant, grease, or oil. They must be free of all matter (e.g., rust, dirt, mill scale, weld spatter, and weld flux) that could jam or clog valves and flow passages.
- Valve stem seals and seats shall be carefully inspected and cleaned if necessary. The system must be dry and free of foreign material.
- A system or Dewar that has been out of service for a significant time should be inspected and cleaned as appropriate.

C.2 Recommended Procedure

- A recommended cleaning procedure for a warm hydrogen system or component includes flushing to remove all loose particles (e.g., sand, grit, rust, and weld spatter). First, flush with approved degreaser, dry, and then flush with demineralized water.
- For liquid hydrogen systems only, the system should be cold-shocked with liquid nitrogen to break off attached particles. The particles then can be flushed with liquid nitrogen into filters. The filters should be cleaned separately.
- The system should be dried by evacuation. If the system cannot withstand a vacuum, flowing hot nitrogen gas through it may dry it. The nitrogen gas temperature should be well above the boiling temperature of water.
- Systems should be dried by three cycles of evacuation and purging through a cold trap before filling with hydrogen gas. Usually three cycles will dry a system so that the cold trap shows no further collection.
- All openings in cleaned systems should be closed in an airtight manner with metal covers and suitable gaskets. Good practice dictates similar treatment or the use of plastic containers for pipes and systems that are yet to receive a final cleaning.

C.3 Cleaning Filters

- Frequency of cleaning depends on the amount of system use and impurities in the fluid. The operators must monitor increases in pressure drops, and clean the filters as needed.

- Filters are cleaned by disconnecting, warming, draining, flushing (with a solvent or ultrasonic cleaning), and then drying thoroughly. Filters must not be cleaned by backflushing the system.
- Periodic system recheck
- To ensure that the appropriate level of cleanliness is maintained, periodically recheck hydrogen systems for contamination levels. Frequency of checking depends upon system use. The engineering organization responsible for a system should establish a cleanliness recheck schedule.

APPENDIX D.—FIRST AID FOR CONTACT WITH CRYOGENIC MATERIAL

(To Be Posted At Test Site)

Contact with liquid cryogens or their cold boiloff vapors can produce cryogenic burns (frostbite). Unprotected parts of the body should not be allowed to contact uninsulated pipes or vessels containing cryogenic fluids. The cold metal will cause the flesh to stick and tear. Treatment of frozen tissue requires medical supervision because incorrect first aid practices always aggravate the injury.

D.1 Exposure to Cryogenic Gases/Liquids

Cryogenic burns result when tissue comes into contact with cold gases, liquids, or their containers. Contact may result in skin chilling or true tissue freezing. Commonly, only small areas are involved, with injury to the outer layers of the skin.

Small quantities of cryogenic material may evaporate from the skin before actual freezing occurs. Such an injury typically produces a red area on the skin. More significant injury is caused by true freezing—the formation of crystals within and around the tissue cells. Frozen tissue always assumes a yellowish-white color, which persists until thawing occurs.

D.2 Treatment of Frozen Body Tissue

Treatment of frozen tissue requires medical supervision because incorrect first aid practices always aggravate the injury. In the field, it is safest to do nothing other than cover the area (if possible) and to transport the injured person to a medical facility. Attempts to administer first aid for this condition will often be very harmful. Listed below are some important don’ts.

- Don’t remove frozen gloves, shoes, or clothing except in a slow, careful manner (skin may be pulled off inadvertently).
- Don’t massage the affected part.
- Don’t expose the affected part to temperatures exceeding 112 °F or temperatures lower than 100 °F.
- Don’t ever apply snow or ice.
- Don’t use safety showers, eyewash fountains, or other sources of water because the water temperatures will almost certainly be incorrect and will aggravate the injury.
- Don’t apply ointments.

Contents

1.0 PURPOSE 3
2.0 APPLICABILITY 3
3.0 BACKGROUND 3
3.1 Codes and Standards 3
3.2 Pressure Testing 3
3.3 GRC Pressure Systems Office 3
4.0 POLICY 4
4.1 NASA Policy Documents 4
4.2 Certification 4
4.3 Variance 4
4.4 Pneumatic Testing 4
5.0 RESPONSIBILITIES 4
5.1 Pressure System Owners and Users 4
5.2 Pressure Systems Manager 5
5.3 Pressure Systems Office Manager 5
5.4 Pressure Systems Office Pressure Systems Engineers 5
5.5 Safety and Health Division Process Safety Engineer 5
5.6 Area Safety Committees 5
6.0 REQUIREMENTS 6
6.1 Training 6
6.1.1 PSO Engineers and NDE Technicians 6
6.1.2 PV/S Operators 6
6.2 Owners and Operators of PV/S (*NASA–STD–8719.17*) 6
6.3 Flexible Hoses 7
6.3.1 General 7
6.3.2 Hose Assembly Requirements 7
6.3.3 Inspection and Certification 7
6.3.4 NCS Hose References 9
6.4 Pressure Testing 9
6.4.1 Applicability 9
6.4.2 Test Methods 10
6.4.3 Pressure Terminology 10
6.4.4 Cold-Shock Testing 11
6.4.5 Low-Pressure Gas-Leak Testing 12
6.4.6 Hydrostatic Pressure Testing Guidelines 13
6.4.7 Pneumatic Pressure Testing Guidelines 14
6.4.8 Other Leak-Testing Methods 17
6.5 Cryogenic Systems 20
6.5.1 Requirements for Cryogenic Vessels and Systems 20
6.5.2 Testing 20
6.5.3 Safety Considerations 20
7.0 RECORDS 22
7.1 PSO Certification Documents 22
7.2 NASA C Forms 23
8.0 REFERENCES 23
APPENDIX A.—DEFINITIONS AND ACRONYMS 25
APPENDIX B.—RESTRICTED DISTANCE FOR PNEUMATIC PRESSURE TESTING 26
B.1 Example 1.—Method for Calculating Restricted Distance for a Pressure Vessel 26
B.2 Example 2.—Method for Calculating Restricted Distance for a Research Rig 27
APPENDIX C.—FIGURES 28

List of Tables

TABLE 6.1.—ALTERNATIVE TEST METHODS AT GRC 10

TABLE 6.2.—CRYOGENIC FLUIDS USED AT GRC 20
TABLE B.1.—OVERPRESSURE EFFECTS 26

List of Figures

Figure C.1.—Typical piping schematic for low-pressure gas-leak test at 5 to 10 psig. 28
Figure C.2.—Typical piping schematic for hydrostatic pressure test. 28
Figure C.3.—Typical piping schematic for pneumatic pressure test. 29
Figure C.4.—Typical piping schematic for operating pressure test. 29
Figure C.5.—Typical plot of system pressure. 30
Figure C.6.—Restricted distance for pneumatic pressure testing. 31

Chapter 7—Pressure Systems Safety

NOTE: *The current version of this chapter is maintained and approved by the Safety and Health Division (SHeD). The last revision date of this chapter was December 2012. The current version is located on the Glenn Research Center intranet at http://smad-ext.grc.nasa.gov/shed/pub/ gsm/gsm-manual.pdf. Approved by Chief of Safety and Health Division.*

1.0 PURPOSE

This document provides reference to the standards and codes containing the NASA and Glenn Research Center (GRC) requirements for all aspects of pressure vessel and pressurized system (PV/S) operation. This includes certification and recertification, design, construction, operation, inspection, and maintenance of PV/S. Because of the extensive detail of the regulations covering these systems, specific requirements of NASA Standards and National Consensus Standards (NCSs) are not repeated in this document. The users of this document must refer to the appropriate standard for specific requirements. The chapter also provides the following:

- GRC policy and guidelines for use and certification of flexible hoses
- GRC policy and guidelines for system pressure testing
- GRC mandatory pneumatic testing permit process
- A method to calculate the restricted distance required during pneumatic testing (Appendix B)
- Basic cryogenic system and vessel information

2.0 APPLICABILITY

Applicability of this chapter follows that of NASA Policy Directive (NPD) 8710.5, NASA Policy for Pressure Vessels and Pressurized Systems, and NASA Standard (STD)–8719.17, Requirements for Ground-Based Pressure Vessels and Pressurized Systems (PV/S), specific to organizations owning, operating, or designing ground-based PV/S at or for GRC at Lewis Field and Plum Brook Station.

3.0 BACKGROUND

3.1 Codes and Standards

NCSs, such as the American Society of Mechanical Engineers (ASME) Boiler and Pressure Vessel Code (B&PV Code), ASME B31 series piping codes, and National Board Inspection Code (NBIC) NB23, etc., have been established to ensure the structural integrity of PV/S through establishment of rules for design, construction, operation, inspection, and maintenance of vessels and systems. NASA directives and standards, given below, require compliance with the applicable NCS as well as certification of systems. Exclusion and waiver processes are also in effect for systems that are outside the scope of the standards, or cannot be immediately certified, but have met risk and hazard assessment requirements.

3.2 Pressure Testing

A large portion of this chapter gives guidance on mandatory pressure testing of new or altered PV/S at GRC. Because of the inherent danger of pneumatic testing, test procedures and equipment use must be carefully planned and reviewed. ASME codes provide test pressures and procedural requirements; however, Section **6.4** provides additional safety guidelines and calculations for the establishment of exclusion zones. A test authorization permit is required for all pneumatic testing at GRC, and the procedure for obtaining the permit is provided.

3.3 GRC Pressure Systems Office

The GRC Pressure Systems Office (PSO) **Web site** provides background information on PV/S certification processes, risk assessment procedures and checklists, supplemental information on preparing pressure system waivers, exclusions and pneumatic test documentation

4.0 POLICY

4.1 NASA Policy Documents

The authority for the pressure system safety program at GRC comes from the following:

- NASA Procedural Requirement (NPR) 8715.3, NASA General Safety Program Requirements
- NPD 8710.5, NASA Safety Policy for Pressure Vessels and Pressurized Systems
- NASA–STD 8719.17, NASA Requirements for Ground-Based Pressure Vessels and Pressurized Systems (PV/S)
- Glenn Safety Manual, Chapter **1**, Safety and Health Management System

4.2 Certification

Per NPD 8710.5, it is NASA policy to manage risk to people, facilities, and the environment posed by flight and ground-based PV/S including boilers. This requires that owner and/or operators (NASA or contractor) of PV/S at GRC design, acquire, fabricate, inspect, test, install, repair and alter, operate, and maintain all ground-based PV/S in accordance with the applicable codes, standards, guides, and regulations as detailed in NASA STD–8719.17. It is policy to certify all ground-based PV/S in accordance with NPD 8710.5 and NASA–STD–8719.17 prior to operation.

4.3 Variance

For pressure systems which cannot be certified per, or are excluded from NASA–STD–8719.17, an approved variance must be in place prior to operation. The PSO web site (http://pso.grc.nasa.gov/) provides instructions on this process. Pneumatic Testing

It is GRC policy to obtain a permit from the Pressure Systems Manager (PSM) prior to performing any pneumatic testing of PV/S.

5.0 RESPONSIBILITIES

Ensuring the safe operation of PV/S involves specialized engineering, nondestructive evaluation (NDE), field verification, and documentation and configuration control. Maintaining safety and compliancy with standards also involves hazard assessment, risk analysis, training, establishing and following operating procedures, and other aspects of basic process safety management. At GRC this involves an extensive number of personnel including the organization owning, operating, and maintaining the system, the GRC PSO, the GRC Safety, Health and Environmental Division (SHED), as well as any outside contracted organization involved in the design, construction, or repair of a pressure system or pressure vessel.

NPD 8710.5 outlines responsibilities of the Center Director, Center Pressure System Manager, management of organizations responsible for ground-based PV/S, and Center Safety Directors.

5.1 Pressure System Owners and Users

NASA employees and contractors responsible for ground-based PV/S shall ensure that their systems meet the requirements of NPD 8710.5 and NASA–STD–8719.17 relative to PV/S. These requirements include all aspects of design, procurement, fabrication, installation, operation, maintenance, training, operating procedures, and configuration control. Pressure system owners shall notify the PSO of new vessels or systems (including flexible hoses) and request certification (via work request) per the above standards. Personnel using non-steel-braided flexible hoses will follow the requirements of Section **6.3.3.2** of this chapter including recordkeeping. PV/S owner operators and or designated contractors shall follow the requirements for all pneumatic testing including test request documentation per Section **6.4** of this chapter.

At GRC, central utility systems as well as other institutional fluid systems are managed and maintained by the Facilities Division. Most test facilities and research labs are serviced by some of these systems. Test and research facility managers and personnel (owners) are responsible for ensuring the requirements outlined above for the equipment and piping systems within their facilities and labs are met. For piping systems, the demarcation (or boundary) is generally defined by a valve or the “System Boundary Valve”. Downstream of the “System Boundary Valve”, the responsibility for ensuring pressure system compliance lies with the system owner or user. The

responsibility upstream of the valve and back to the source lies with the Facilities Division, specifically the System Manager for that specific fluid system. If the "System Boundary Valve" has not yet been identified and marked for a particular system, test and research facility personnel shall contact the Pressure Systems Office (or system manager) to determine the boundary point between the institutional and research systems. This would generally occur when work orders are placed for test and research system initial certification or re-certification.

5.2 Pressure Systems Manager

The GRC PSM is responsible for implementation of NPD 8710.5 and NASA–STD–8719.17, NASA Requirements for Ground-Based Pressure Vessels and Pressurized Systems (PV/S). The PSM oversees the PSO activities that meet the above requirements. The PSM will also review and approve pneumatic test requests for proper justification over hydrostatic testing, technical content including pressure-relieving system, proper barricading of the exclusion zone, and test forms.

5.3 Pressure Systems Office Manager

The PSO manager, reporting to the PSM, is responsible for PV/S engineering assessment, inspection, NDE, risk assessment, and documentation of certified systems and components. The mechanical integrity assessment of pressure vessels and systems via the technical implementation of NPD 8710.5 and NASA–STD–8719.17 is the primary responsibility of the PSO manager.

5.4 Pressure Systems Office Pressure Systems Engineers

PSO pressure systems engineers are responsible for conducting the GRC PV/S certification process in accordance with NPD 8710.5, NASA STD–8719.17, and all applicable consensus codes and standards. These engineers recommend and evaluate NDEs and inspections performed on all PV/S and determine suitable inspection and recertification frequencies. Pressure systems engineers are qualified in characterizing and analyzing flaws in accordance with latest applicable code requirements and engineering practices, and they prepare necessary repair specifications to resolve safety issues. Pressure systems engineers resolve issues in dealing with the certification of existing pressure systems and vessels due to lack of existing system documentation and changes in consensus codes and standards in terms of safe design and construction acceptability. They are also responsible for creating specifications for system inspections.

5.5 Safety and Health Division Process Safety Engineer

The GRC SHeD process safety engineer is responsible for assisting Center personnel with pressure system compliance, safety issues, and review of pressure system waiver requests. The SHeD process safety engineer will work with PSO engineers, system owners and operators, and safety committees to advise on, evaluate, and resolve pressure system operational, compliance, and safety issues. The SHeD process safety engineer will review waiver requests for proper content, including a description of the system and the hazards, overall risk assessment, and acceptability of the proposed mitigation. The SHeD process safety engineer will also review pneumatic test requests for proper justification over hydrostatic testing, technical content including pressure-relieving system, proper barricading of the exclusion zone, and test forms.

5.6 Area Safety Committee Members

The responsibilities of GRC safety committees are defined in Chapter **1** of the Glenn Safety Manual. Safety committees issue safety permits for process systems and test cells containing PV/S only upon the pressure systems being certified, excluded from certification requirements, or an approved variance in place. This requires that verification of certification, an exclusion, or an approved variance be included in any permit application package containing a PV/S. For test and research facility permit applications, the local pressure system piping fed from central institutional systems, is bounded on the upstream side by a "System Boundary Valve" tagged as such in the field and generally identified on distribution system P&IDs. Upstream of this valve the piping certification is the responsibility of the facilities division. Downstream, test facility personnel are responsible and status of systems shall be noted in the permit package. If the "System Boundary Valve" has not yet been identified and tagged, contact the Pressure Systems Office (or System Manager) for the "Boundary Location".

6.0 REQUIREMENTS

6.1 Training (GSM, Chapter 2—Safety, Health, and Environmental Training)

6.1.1 PSO Engineers and NDE Technicians

See the PSO **Website** for specific training, experience, and certification of pressure system engineers and NDE technicians.

6.1.2 PV/S Operators

The following NASA Safety Training Center Classes are recommended for operators of PV/S at GRC. Not all classes may be applicable to all personnel.

Class number	Class name
SMA–SAFE–NSTC–0317	Safety in High Pressure Operations
SMA–SAFE–NSTC–0318	Compressed Gas Trailer Safety
SMA–SAFE–NSTC–0056	Flex Hose Safety
SMA–SAFE–NSTC–0037	Hydrogen Safety
SMA–SAFE–NSTC–0054	Safety in Hydrogen System Operations
SMA–SAFE–NSTC–0052	Fire Hazards in Oxygen Systems
SMA–SAFE–NSTC–053	Oxygen Systems: Operations and Maintenance
SMA–SAFE–NSTC–0313	Cryogenics Safety
SMA–SAFE–NSTC–0314	Liquid Nitrogen Handlers' Course

6.2 Owners and Operators of PV/S (*NASA–STD–8719.17*)

Owners and operators (NASA or contractor) of PV/S at GRC shall design, acquire, fabricate, inspect, test, install, repair and alter, operate, and maintain all ground-based PVS in accordance with the applicable codes, standards, guides, and regulations as detailed in NASA–STD–8719.17. The standard requires compliance with ASME Boiler and Pressure Vessel Code, ASME Piping Codes, Department of Transportation (DOT) regulations, NBIC, and other NCSs.

6.2 Verification: The GRC PSO certifies PV/S for compliance and maintains a data base of systems and components. Safety permits are not issued unless PV/S are either certified, excluded from 8719.17 requirements or operate under an approved variance. Status of PV/S is verified during the system permit review or other reviews.

NASA–STD–8719.17 includes the following:

- Applicability of systems to the standard and certification (the standard applies to all ground-based equipment designed for, or operating at, positive or negative gauge pressure that is not specifically excluded.)
- Exclusions to certification requirements
- General requirements of PV/S certification
- Design and construction requirements for new PV/S
- PV/S integrity assessment
- PV/S risk assessment
- Specific component requirements

6.3 Flexible Hoses (*NASA–STD–8719.17*)

6.3.1 General

Flexible hoses in use at GRC shall be suitable for the specific application (i.e., material and fluid compatibility, pressure, temperature, etc.). A common hose construction for high-pressure or hazardous services at GRC is a PTFE (polytetrafluoroethylene or Teflon) liner or tube with a stainless steel overbraid. Reinforced rubber or thermoplastic compositions are also used for appropriate applications. Flexible hoses shall be used only when required for connection of portable equipment or for vibration isolation when no other feasible means is available. Hazards associated with flexible hoses include flying debris and violent whipping action of the hose due to rupture. Additionally, failure of such hoses could result in hazardous commodity leakage and loss of system control. Therefore flexible hoses in many applications must be specified correctly and periodically inspected and certified. Hoses must be identified with physical marking as to verify proper application and facilitate inspection and tracking.

6.3.2 Hose Assembly Requirements

A hose shall be purchased for the specific fluid that flows through it. Since manufacturers' rate hoses for suitability with specific fluids, these compatibility ratings and the manufacturer's pressure and temperature ratings shall be used for determining acceptability.

The maximum allowable working pressure (MAWP) of the hose must meet or exceed the maximum design pressure (DP) of the system. The burst pressure of the hose must be specified by the manufacturer to be at least four times the MAWP.

At the time of fabrication, steel braided (overbraid covering) hose assemblies shall be pressure tested by the manufacturer according to applicable NCS. Documentation of such testing must be included with each hose assembly. This does not apply to standard hydraulic hose or other rubber or thermoplastic hose which the manufacturer has certified to be manufactured, tested, and assembled to a national standard such as Society of Automotive Engineers (SAE) or International Organization for Standardization (ISO). Individual assemblies of these hoses are generally not tested by the manufacturer.

Hose assemblies shall be tagged with a permanent stamped metal tag or marked along the length of the hose (generally hydraulic or utility hoses). The tag or marking shall show the date of the pressure test (if applicable), the maximum DP and temperature, the manufacturer and part number, and the fluid it will accommodate. The burst pressure may be given on the hose exterior if clearly identified (not to be confused with operating pressure).

All hoses that may whip and cause physical injury to personnel or equipment damage shall have restraints installed in accordance with manufacturers' recommendations to prevent excessive whipping action should breakage occur. Kellems-type restraints are an example of what may be used. Restraints shall be placed at each end and at least every 6 ft of longer hoses. An evaluation of the potential force should be made to ensure adequate strength of the restraint and anchor points. The manifold or other pressure piping shall not be used as an anchor. Tube trailers are provided with anchoring points for harnesses.

6.3.3 Inspection and Certification

All flex hoses except those in excluded categories (as outlined below) must be certified by the PSO. In general, hoses requiring certification are the steel-braided type and are in service conveying any commodity over 210 °F, fluids over 150 psig, gas over 150 psig, or in piping larger than ½ in. in diameter, oxidizers, toxic or flammable commodities, cryogenic fluids, or other fluids that may be hazardous to human tissue per ASME B31.3.

Flex hoses in the following service categories are excluded from PSO certification:

- Flex hoses ½-in. internal diameter and smaller that convey air or inert gas at 150 psig or lower pressure at roughly ambient temperature (less than 210 °F)
- Hoses conveying water, hydraulic oil, lubrication oil, or nontoxic and noncryogenic liquids at operating pressures of 150 psig or lower and 210 °F or lower (There is no hose size and limit for this exclusion; however, the hose must be rated by the manufacturer for the service pressure and temperature and must meet general requirements outlined above.)
- Hydraulic hoses specifically manufactured for hydraulic service (The hoses must be rated and stamped or marked by manufacturer for hydraulic service as outlined above.)

Flex hoses that meet all of the below criteria can be excluded from PSO certification by GRC Pressure Systems Manager via a C-4027 Exclusion Request. A formal C-4029 Exclusion Certificate must be issued for the exclusion to be valid:

- A documented risk assessment has been made to determine potential injury, mission, and environmental risks associated with the flex hose.
- The risk assessment has determined:
  1. there are no credible whipping hazards
  2. there is no unacceptable hazard to personnel in event of hose rupture
  3. flex hoses are assembled and tested per hose manufacturer specifications (especially important in circumstances where third party hose vendor assembles custom hoses to order)
  4. hose rupture would not present any unacceptable hazard to personnel or risk to mission

6.3.3.1 Certification Requirements

All flex hoses, not excluded per Section 6.3.3, must be certified by the PSO. Certification is valid for a 5-yr period and shall include the following:

- Manufacturers' pressure test records and certification documents (to be provided in lieu of PSO initial pressure test)
- Documentation including identification tag number or serial number, manufacturer, nominal size, material of construction, rated working pressure and temperature, and material compatibility with working fluid
- Regular external visual examination on a schedule determined by the PSO (PSO will inspect entire length of the hose for evidence of damaged fittings, kinks, broken wire braid, or other signs of degradation. Hose assemblies shall be removed from service upon evidence of damage or misuse.)
- Installation per manufacturer's and/or NCS requirements
- Inspection records per manufacturer recommendations and/or NCS requirements
- Visual examination (shall be performed by a certified American Society for Nondestructive Testing Level II Non-Destructive Examiner in accordance with the applicable NCS)
- Hoses shall meet all required commodity and pressure specifications

Recertification (renewal for another 5-yr term) by the PSO shall include the following:

- Documentation review
- External visual examination and internal visual examination with a fiber scope
- Visual examination shall be performed by a certified ASNT Level II Non-Destructive Examiner in accordance with the applicable NCS
- A pressure test at the MAWP by the PSO (Hoses shall be replaced if any degradation is found. The dates of inspection shall be documented and maintained by the PSO.)

6.3.3.2 Noncertified Flex Hoses

Noncertified hoses include non-steel-braided (general utility type, reinforced rubber, or thermoplastic hose), hydraulic system hoses, and those in service for low-pressure water and air applications as specified in Section **6.3.3**. For these hoses, the owner operators shall ensure the hose is installed, maintained, and operated in accordance with manufacturer recommendations. This requires the following:

- Documentation including manufacturer, nominal size, material of construction, rated working pressure and temperature, and material compatibility with working fluid

- Installation per manufacturer's and or NCS requirements
- Inspection records per manufacturer recommendations and/or NCS requirements
- Hydraulic system hose assemblies shall be conventional, commercially manufactured, hydraulic hose and fittings.
- Pressure testing of new hydraulic hose assemblies is not required. A leak check at operating pressure shall be done when first put into service and whenever a system is repressurized after downtime.
- Hydraulic hoses shall have the manufacturer's burst pressure identified on the external hose diameter.

6.3 Verification: The GRC PSO certifies PV/S for compliance and maintains a data base of systems and components. Safety permits are not issued unless PV/S, or components including flex hoses, are either certified, excluded from 8719.17 requirements or operate under an approved variance. Status of PV/S is verified during the system permit review or other reviews. Hose certification may also be verified during facility inspections by checking presence of the PSO tag and data.

6.3.4 NCS Hose References

See Section **8.0** for further information.

6.4 Pressure Testing (*NASA–STD–8719.17*, ASME B&PV Code Section VIII, ASME B31.3)

6.4.1 Applicability

The following defines testing requirements for existing and new ground-based pressure vessels and piping systems at NASA Glenn Research Center. NASA requires compliance with NCS and standards to maintain the highest degree of safety for personnel and property.

All pressurized systems at GRC must be pressure tested as noted below. The purpose of the test is to verify structural integrity and pressure tightness. With appropriate NDE, design and construction, and documentation, the pressure test gives assurance that potential hazards to personnel and property are at a minimum.

Cold-shock testing must be performed on all systems in cryogenic service. Before any pressure is applied to the system, it must be chilled to cryogenic temperatures and observed for leakage. After successful completion of the cold-shock test, a pressure test is performed.

6.4.1.1 Systems Requiring Testing

A pressure test is required to verify the integrity of all newly installed or altered pressure vessels and piping systems at GRC. In accordance with the applicable NCS, repaired systems may be required to undergo a pressure test. Most PV/S at GRC will be tested per the ASME B&PV Code, Section VIII or ASME B31.3. In the following situations, a pressure test is required:

1. Installation of a new pressure system that uses either new or reused components
2. Alteration of an existing PV/S (The NBIC defines an alteration as any change that affects the pressure-containing capability of the system. Some nonphysical changes, such as an increase in the maximum allowable working pressure or design temperature, are considered alterations. A reduction in minimum temperature such that additional mechanical tests of system materials are required is also considered an alteration.)
3. Physical relocation of a stationary pressure vessel
4. May be required for periodic recertification of a PV/S
5. Repair of an existing pressure system if the system engineer or the NCS requires it (The NBIC defines a repair as any work necessary to restore a system to a safe operating condition, provided there is no deviation from the original design.)

In addition to PV/S following ASME B&PV Code Section VIII or ASME B31.3, systems with other specific testing requirements include:

6.4.1.2 Mobile Pressure Vessels

Compressed gas cargo tanks (mobile tube trailers) and cryogenic liquid cargo tanks (mobile dewars) are classified as mobile pressure vessels. These vessels fall within the cognizance of DOT requirements in 49 Code of Federal Regulations (CFR), which requires periodic pressure tests and specifies allowable repairs. The periodic pressure tests specified in 49 CFR shall be performed by an organization qualified in accordance with 49 CFR to perform such testing.

6.4.1.3 DOT Specification Cylinders

Specification cylinders fall within the cognizance of DOT requirements of 49 CFR, which requires periodic pressure tests and specifies allowable repairs (see also, Compressed Gas Association (CGA) C–1, Testing of Compressed Gas Cylinders).

6.4.1.4 Unique Piping Systems

Piping systems for certain commodities are designed to specific ASME piping codes. These codes have requirements that relate to those commodities, including pressure test requirements. Some specific codes applicable to GRC are ASME B31.2, Fuel Gas Piping; B31.5, Refrigeration Piping and Heat Transfer Components; B31.8, Gas Transmission and Distribution Piping Systems; and B31.9, Building Services Piping Code. For such piping systems, the pressure test requirements of the appropriate code shall be used directly.

6.4.2 Test Methods

A hydrostatic pressure test is the baseline requirement for pressure testing of a PV/S. Before any pressure test is started, appropriate NDE of the system shall be performed in accordance with the applicable NCS. This will minimize potential hazard or delay during the pressure test. In addition, all systems for use in cryogenic service shall be cold-shock tested before being pressure tested. The hydrostatic pressure test shall be conducted in accordance with the applicable NCS. The unique nature of the research conducted at GRC may require alternate test methods (other than hydrostatic), which are summarized in Table 6.1, along with the primary hydrostatic method.

TABLE 6.1.—ALTERNATIVE TEST METHODS AT GRC

Test	Test method
Cold-shock test	For cryogenic systems only; expose system to liquid nitrogen temperatures (–320 °F) to verify compatibility of design and materials for cryogenic service
Primary pressure test (Hydrostatic)	An optional low-pressure gas-leak test followed by a hydrostatic pressure test conducted in accordance with the applicable National Consensus Standard.
Alternate pressure test (Pneumatic)	An optional low-pressure gas-leak test followed by a pneumatic or combination hydrostatic and/or pneumatic pressure test conducted in accordance with the applicable National Consensus Standard.

Pressure testing is done to verify the structural integrity of a vessel or piping system. The ultimate benefit is to ensure personnel safety; therefore, considerations of time or funding are not sufficient reasons to request use of the alternate test methods or to waive any test requirements.

No pneumatic test shall be conducted until a written procedure incorporating appropriate safety procedures has been approved by SHED and the PSM (see Section **6.4.7)**.

6.4.3 Pressure Terminology

Different terms exist for the maximum allowable pressure in a pressure system. ASME Code, Section VIII, Division I uses MAWP, whereas Division II uses DP. ASME piping codes also use DP. This document uses MAWP to describe the maximum pressure at which a component or system is designed to operate, unless referring to a specific code.

The term “operating pressure” is not synonymous and should not be interchanged with the terms DP or MAWP, as a system or vessel typically operates below the DP or MAWP, to allow a sufficient margin between the operating pressure and the relief device set pressure. This is evident in the definition of operating pressure as defined in ASME Section VIII Div. I, and is as follows:

- Operating pressure.—The pressure at the top of a vessel at which it normally operates. It shall not exceed the maximum allowable working pressure, and it is usually kept at a suitable level below the setting of the pressure-relieving devices to prevent their frequent opening.

6.4.4 Cold-Shock Testing

All vessels or lines designated for cryogenic service shall be subjected to a standard cold-shock test as described in this section. A cold-shock test is the initial test in the sequence for testing of cryogenic systems. It is to be performed before any pressure test is considered. The recommended fluid for cold-shock testing is liquid nitrogen (LN_2). Alternate fluids, for special cases only, are nitrogen or helium gas cooled to at least –150 °F by an LN_2 heat exchanger.

> ***NOTE:*** *CAUTION. When using LN_2 in the pressure testing procedures for liquid hydrogen (LH_2) systems, be aware of the weight and temperature differences between the two fluids.*

6.4.4.1 Purpose of Cold-Shock Testing

The purpose of cold-shock testing is to verify compatibility of materials, equipment, and fasteners for cryogenic service. Cold-shock testing of recommended cryogenic materials at LN_2 temperatures (–320 °F) will produce at least 93 percent of the total thermal contraction that would be obtained with LH_2 (–423 °F) and liquid helium (–452 °F). This contraction in the system being tested may reveal defects, such as inadequate design, incompatibility of materials, etc., leading to brittle fracture or physical distortion. The following precautions will help prevent injury to personnel and failure of the system:

1. Inspection.—The vessel, component, or piping system shall be inspected for correct assembly, weld quality, correct torque on threaded fasteners, and trapped liquids. The pressure of liquids trapped in cavities and frozen by cryogenic temperatures may cause failure of the system.
2. Personal protection.—The principal hazards of cold-shock testing are the extremely low temperatures involved and the potential for asphyxiation. All personnel shall be dressed in personal protective equipment before chilling the system. Gloves that are relatively impenetrable and loose fitting shall be worn for handling LN_2 equipment or LN_2-cooled parts. Handlers of LN_2 shall also wear a face shield that will stop splashes from all directions. An apron of nonabsorbent material shall be worn when splashing is a possibility. Trousers shall be cuffless and worn outside leather high-top shoes.
3. Ventilation.—To prevent asphyxiation of personnel, cold-shock testing shall be done out-of-doors or in adequately ventilated areas.
4. Procedure.—The preferred cold-shock testing method is immersion, but if such is not possible, the cold flow method may be used.
5. Immersion.—Whenever possible, the system shall be completely immersed in an open LN_2 container fabricated from material approved for use with cryogenic fluids. The system shall be immersed slowly to prevent LN_2 splashing.
6. Cold flow.—If the configuration of a system prohibits complete immersion in LN_2, flow low-pressure LN_2 (as close to atmospheric pressure as possible) through the system or fill it with an LN_2-cooled gas.

> ***NOTE:*** *CAUTION. If the system being cold-shock tested has been designed for a cryogen other than LN_2 (e.g., LH_2), the design engineer shall determine the amount of LN_2 to be used so as not to overload the structure with heavier fluid.*

The piping that runs from the LN_2 container to the system being cold-shock tested shall be as short and direct as possible. The initial flow of LN_2 should be established directly into the system under test, rather than through a precooled line, so as to provide maximum temperature induced shock.

Adequate venting capacity of the system shall be ensured during the cold flow test. The initial surge of LN_2 into the system will cause the initial venting rate to exceed the normal venting rate.

The system shall remain in the LN_2 environment until it is completely chilled. A completely chilled system is defined as one immersed in LN_2 until excessive bubble formation ceases or until monitoring equipment indicates no further temperature decrease with extended duration of cold flow (15 minutes).

6.4.4.2 Post-Cold-Shock Testing Procedures

Completion of the cold-shock test shall be documented after the following procedures have been accomplished:

1. System warm-up.—Remove the system from the cold environment and allow it to warm to ambient temperature. On some systems, it may be advantageous to use auxiliary heating devices, a water spray, or gas purge to reduce the warming time. If a water spray is used, it should be maintained until the system is above the freezing point of water, since the ice coating will act as an insulator and lengthen warm-up time (CAUTION—Remove all traces of water).
2. Retorquing.—After the system has reached ambient temperature, all threaded fasteners and components should be retorqued.
3. Inspection methods.—Inspect the entire system for any evidence of failure. Particular attention should be given to welds and joints of dissimilar metals. Repair all defects.
4. Repaired systems.—All defective portions of any system shall be subjected, after repair, to another cold-shock test before any other test is considered.

6.4.5 Low-Pressure Gas-Leak Testing

A low-pressure (5 to 10 psig) gas-leak test is optional for systems that are hydrostatically tested; however, all other systems shall be subjected to such a test. A suggested piping diagram for low-pressure gas-leak testing is shown in Figure C.1 (Appendix **C**).

For cryogenic systems, the low-pressure leak test shall be performed after the cold-shock test and before the pressure strength test. It is the initial test to be performed on all non-cryogenic systems.

The purpose of the low-pressure gas-leak test is to indicate possible failure sites in a system before any form of high-pressure testing is undertaken. Although the system pressure is low, this test will indicate cracks and gross porosity in welds, leakage through threaded components, and improper sealing of gaskets, O-rings, and other joints.

The soap bubble test is recommended as a part of the low-pressure gas-leak test, because it is easy to do, is quick, does not need exotic equipment, and is sensitive. The bubble test is performed by pressurizing the system to 5 psig or less with air and applying a film of bubble-testing liquid or a soap and water solution. Leaks are indicated by the bubbles formed by the leaking gas. Standard prepared bubble-testing solutions or commercial Leak Tec fluid is recommended.

Simple equipment is required for a bubble test. Air or nitrogen gas shall be used for pressurizing the system. Helium gas is not recommended because the extra sensitivity is marginal and the cost of the gas is high.

The suggested procedure for a low-pressure gas-leak test is as follows:

1. Document performance of the test on the appropriate hydrotest or pneumatic test form.
2. Ensure that the system temperature is above the freezing point and below the boiling point of the bubble-testing liquid.
3. Clean the exterior of the system with an approved commercial solvent. Appropriate safety and environmental precautions shall be followed when solvents are being used. The surface must be clean before the bubble-testing liquid is applied, because oil films or small amounts of soldering flux will destroy the liquid’s bubble-producing capability.
4. Pressurize the system to 10 percent of the normal working pressure of the system, but do not exceed 5 psig. High pressures are not necessary for the leak test. Small leaks can be pinpointed without the hazards of high-pressure testing.
5. Apply bubble-testing liquid to all joints and seams of the system. Watch for the formation of bubbles. The gas bubbles will form at the leak, showing its precise location.
6. Repair all leaks before continuing the test sequence.

6.4.6 Hydrostatic Pressure Testing Guidelines

This section provides basic information and guidelines for hydrostatic testing of pressure systems and vessels. These hydrostatic test guidelines apply to pressure systems and vessels designed for liquid, gas, steam, or cryogens. The guidelines are based on ASME Boiler and Pressure Vessel Codes and the ASME Piping Codes. The test pressure for a system or vessel (as well as fluid and ambient temperature requirements) should be found in the applicable code.

Before any pressure tests are considered, all new or altered cryogenic pressure vessels and piping systems shall be cold-shock tested. Furthermore, before any hydrostatic pressure test is done, a low-pressure gas-leak test is recommended for detecting gross leaks.

All high points in the system shall be provided with valves to bleed possible air pockets while the system is being filled with test fluid. If the system cannot be vented, safety measures equivalent to those taken with a pneumatic test must be implemented.

During application of hydrostatic pressure, nonessential personnel shall be restricted from the test area, and the area shall be barricaded or patrolled to enforce such restriction. Test personnel must take shelter behind structures, walls, or proper supports, and take precautions against the potential danger from fluid leakage.

Hydrostatic test results shall be documented on appropriate forms (sample pressure vessel and piping system report forms are included in this chapter).

6.4.6.1 Test Equipment

A typical schematic for a hydrostatic pressure test is shown in Figure C.2 (Appendix **C**). A safety relief device having a set pressure of the test pressure plus 50 psi or 110 percent of the test pressure, whichever is lower, shall be provided. The flow capacity of the relief device shall be at least equal to the output of the hydrostatic pressure source.

Water shall be used as a test medium. Test water shall be clean and of a quality that minimizes corrosion of the materials in the system under test. In the rare cases where water would contaminate or otherwise harm the system, consideration may be given to testing with another nontoxic fluid. Testing with a fluid other than water requires specific approval of the PSO and SHeD.

A calibrated pressure gauge shall be used to indicate test pressure. It shall be visible to the operator of the pressure source and shall be calibrated against a standard deadweight tester or a calibrated master gauge. Gauges shall be recalibrated periodically or at any time there is reason to believe they are in error.

The range of the pressure gauge used to indicate test pressure should be about double the test pressure, but not less than 1.5 times the test pressure nor greater than 4 times the test pressure. Digital pressure gauges may be used if their accuracy is comparable to a calibrated dial pressure gauge.

For large vessels or systems where more than one pressure gauge is required, a recording gauge is recommended and may be substituted for one or more of the indicating gauges.

6.4.6.2 Preliminary Considerations

Equipment that is not to be subjected to the pressure test shall be either disconnected from the system or isolated by a blank or similar device. Valves may be used for this purpose provided the valve closure is suitable for the proposed test pressure. Isolated equipment and piping not being tested shall be vented.

All welded, flanged, and threaded joints and connections not previously pressure tested shall be left uninsulated and exposed for examination during testing.

All stress loadings that may exist during this test shall be determined before the final hydrostatic test pressure is specified. The system shall never be subjected to stresses greater than the predetermined limit.

To locate major leaks in the system, a preliminary low-pressure gas-leak test not exceeding 5 psig may be performed before the hydrostatic pressure test. All leaks shall be repaired before proceeding with the hydrostatic pressure test.

Systems designed for gas or vapor may require temporary support or bracing to withstand the weight of the test fluid used in the hydrostatic pressure test. Adequate drainage or other provisions shall be available to remove the test fluid at the conclusion of the hydrostatic test. Hydrostatic tests with water shall not be conducted when ambient

temperature is below 40 °F. The temperature of water shall not be higher than 120 °F, unless a higher test temperature is specified and approved. If a hydrostatic test is conducted with a water temperature higher than 120 °F, the final, close visual examination at the test conclusion shall be conducted only after the water temperature falls below 120 °F.

Before hydrostatic pressure is applied, the test equipment shall be examined to see that it is tight. All low-pressure filling lines and other components of the test equipment that should not be subjected to test pressure shall be disconnected or blanked off.

6.4.6.3 Procedure

The hydrostatic pressure shall be increased gradually until the system is subjected to 50 percent of the test pressure. At this point, the manual isolation valve shall be closed and the pressure held until the test gauge stabilizes. The system shall be closely examined for leaks and other deficiencies. Leaking will be indicated by a continuous decrease in the system pressure. Temperature changes in the system shall be monitored to correct pressure changes.

> ***NOTE:*** *WARNING. If signs of yielding or failure of the system are observed, pressure shall be slowly decreased to zero.*

After 50 percent of the test pressure is reached, the system pressure shall be increased in 10-percent increments (60, 70, 80, 90, and 100 percent) to final test pressure. At each pressure level, the manual isolation valve shall be closed and the pressure held until the test gauge stabilizes. The system shall be observed for an indication of leakage at each step. Observation shall be carried out from a safe distance. Continue increasing pressure until the full test pressure is applied.

After maximum test pressure is reached, the isolation valve of the hydrostatic pump shall be closed and the full test pressure continuously maintained for a minimum of 15 minutes. During this time, the system shall be observed for indications of leakage. Observation shall be carried out from a safe distance.

Following the application of full hydrostatic test pressure, the pressure shall be reduced to a value not less than the MAWP of the vessel or system. A close visual examination for leakage shall be made at all welds and all flanged and threaded joints.

Hydrostatic testing of a pressure vessel is a potentially hazardous procedure. All suitable safety precautions shall be taken to eliminate potential hazards to personnel and property. All joints and connections shall be examined for leakage. The piping system, exclusive of possible localized instances at pump or valve packing, shall show no visual evidence of weeping or leaking. Piping system expansion joints under test shall be provided with temporary restraints if the additional pressure load makes it necessary, or they shall be isolated with blanks or valving during the system test.

6.4.6.4 Documentation

A checklist and a report are to be filled out for every hydrostatic pressure test and sent to the PSM PSO Administrative Assistant. Use the following NASA C forms, as applicable:

C–4022, Pressure Vessel Hydrostatic Test Checklist

C–4016, Pressure Vessel Hydrostatic Test Report

C–4018, Piping System Hydrostatic Test Checklist

C–4012, Piping System Hydrostatic Test Report

6.4.7 Pneumatic Pressure Testing Guidelines

This section provides basic information and guidelines for pneumatic testing of pressure systems and vessels. These pneumatic testing guidelines apply to pressure systems and vessels designed for liquid, gas, steam, or cryogenics. The guidelines are based on the ASME Boiler and Pressure Vessel Codes, the ASME Piping Codes, and the Glenn Safety Manual. The test pressure for a system or vessel should be found in the applicable code as well as fluid and ambient temperature requirements.

These general guidelines govern pneumatic pressure testing; however the decision to apply a pneumatic test instead of a hydrostatic test is restricted to the following situations:

- The pressure system is designed or supported in a manner that unquestionably cannot be safely filled with liquid.
- The configuration of the pressure system is such that it cannot be dried, and traces of the test medium cannot be tolerated.
- A hydrostatic test would damage linings, internal insulation, or other equipment.

  NOTE: *Variance from these procedures requires PSO and SHeD concurrence.*

6.4.7.1 Test Authorization

Prior to any pneumatic test, a test procedure along with supporting documentation must be reviewed by SHeD and the PSM. The permit requestor must complete a Pneumatic Test Request form (NASA **C–802**), and submit it along with attached documentation to the PSM or PSO Administrative Assistant. Once reviewed and found satisfactory, a Pneumatic Test Permit (NASA **C–804**) is signed by the PSM and issued to the requestor. If insufficient information is provided, or procedures or calculations are incorrect, the requestor will be notified to make the corrections prior to issuance of the permit. A list of the required supporting documentation for most test cases is provided on the Pneumatic Test Request form. This includes system MAWP data, piping and instrument diagrams (P&IDs), test diagram showing pressure source and connection to the system, restricted distance calculations, relief device information, barricade plan, etc. A restricted distance based on the method given in Appendix B must be given along with the calculation. An associated barricade plan containing a plan view of the area is also required.

6.4.7.2 Hazards of Pneumatic Testing

Use of compressed gas as test medium is hazardous. Precautions shall be taken to ensure that adequate protection is provided to prevent injury to personnel and damage to property from missile fragments, shock waves, or other consequences of a rupture or leakage during a pneumatic test. Pneumatic testing shall always be conducted using the two-man buddy system (see Chapter **22** of the Glenn Safety Manual).

The following paragraphs illustrate some hazards associated with pneumatic testing. Personnel attempting a pneumatic test of any system should be aware of these potential hazards.

- Fragmentation into shrapnel will result if the part under test breaks up. Since the shrapnel will travel at high velocity for long distances, the likelihood of injury to unprotected personnel or equipment is very high.
- An explosive noise will result from a large rupture, whereas noise of extended duration will result from a small-orifice failure. By reflex action from the sudden noise, personnel in the nearby area could expose themselves to injury. Another hazard to consider is the cutting action of a high-velocity, small-orifice air leak.
- A pressure wave or pulse could develop from a gross rupture, presenting a hazard to personnel and possible damage to surrounding equipment and structures.
- Equipment motion resulting from a gross rupture can cause whip action from failure of a flexible pipe or hose, unless the system is securely fastened. In addition, a severe structural failure of a lightweight container or vessel could cause the part to act as a projectile, propelled by the resulting discharge force. Therefore, before any pneumatic test is conducted, the parts shall be securely fastened to prevent hazardous movement.

Appendix B of this chapter shows the recommended method for determining the restricted distance for pneumatic tests. The restricted distance is based on the distance where blast overpressure will equal 0.5 psi; this level of overpressure may shatter glass windows. Protection of buildings and major structures shall also be considered if they are inside the exclusion area. The restricted area shall be barricaded or patrolled to control movement of all personnel in the area.

Restrictions for operation may be required to ensure safe operation of the system. These restrictions shall be developed for use both during the pressure test and during subsequent normal operation of the system. The restrictions may include physically isolating the system with blast walls, removing all personnel from a defined area when the system is pressurized, or placing the vessel in a remote location. Permanent signs and barriers should be

considered. Other precautions may be required. Combination hydrostatic/pneumatic pressure tests are as hazardous as pneumatic tests; therefore, identical precautions shall be employed.

Before any pressure tests are considered, all new or altered cryogenic pressure vessels and piping systems shall be cold-shock tested. Furthermore, a low-pressure gas-leak test shall be performed before a pneumatic pressure test is considered.

Brittle materials shall not be subjected to pneumatic pressure tests. A brittle material is one that has either (1) less than 10 percent elongation in standard tensile tests or (2) a ductile-to-brittle transition temperature (as indicated by Charpy impact tests) that is above the test temperature. Some commonly used brittle materials are glass, cast iron, and most high-strength alloys. See the applicable NCS for examination requirements of components that are not pressure tested.

6.4.7.3 Test Equipment

A suggested piping diagram for the pneumatic pressure test is illustrated in Figure C.3 (Appendix C). A safety relief device having a set pressure of the test pressure plus 50 psi, or 110 percent of the test pressure, whichever is lower, shall be provided. The flow capacity of the relief device shall be at least equal to the output of the pneumatic pressure source.

The gas used as the test medium shall be nonflammable and nontoxic. Air or nitrogen gases are the preferred pressurizing fluids. In addition, it shall not be vented in a confined area. This eliminates the possibility of breathing undesirable or hazardous materials that may reside within the hardware.

A calibrated pressure gauge shall be used to indicate test pressure. It shall be visible to the operator of the pressure source and shall be calibrated against a standard deadweight tester or a calibrated master gauge. Gauges shall be recalibrated at any time that there is reason to believe that they are in error. The pressure range of the test gauge shall not be less than 1.5 times the test pressure nor greater than 2 times the test pressure. Digital pressure gauges may be used if their accuracy is comparable to a calibrated dial pressure gauge. For large vessels or systems where more than one pressure gauge is required, a recording gauge is recommended and may be substituted for one or more of the indicating gauges.

Before applying pneumatic pressure, the test equipment shall be examined to ensure that it is tight. All low-pressure filling lines and other components of the test equipment that should not be subjected to test pressure shall be disconnected or blanked off.

6.4.7.4 Preliminary Considerations

The temperature of the test medium used to apply a pneumatic test is determined differently for pressure vessels and pressure systems. All stress loadings that may exist during this test shall be determined before the final pneumatic test pressure is specified. The system shall never be subjected to stresses greater than the predetermined limit. Equipment that is not to be subjected to the pressure test shall be either disconnected from the system or isolated by a blank or similar device. Valves may be used for this purpose, provided the valve closure is suitable for the proposed test pressure. Isolated equipment and piping not being tested shall be vented. All welded, flanged, and threaded joints and connections not previously pressure tested shall be left uninsulated and exposed for examination during testing.

6.4.7.5 Procedure

To locate major leaks in the system, a preliminary low-pressure gas-leak test not exceeding 5 psig shall be performed before other methods of leak testing.

When the leak-test pressure of 5 psig has been reached, the system under test shall be isolated from the pneumatic pressure source with a hand valve. The test gauge shall be observed for at least 15 minutes to ensure the leak tightness of the system. Leaking will be indicated by a continuous decrease in the system pressure. Temperature changes in the system shall be monitored to correct for pressure change due to temperature change.

The pneumatic pressure shall be increased gradually until the system is subjected to 50 percent of the test pressure. At this point, the pressure shall be held until the test gauge is stable. After 50 percent of the test pressure is reached, the system pressure shall be increased by 10-percent increments to the final test pressure (60, 70, 80, 90, and 100 percent). The manual isolation valve of the pneumatic pressure source shall be closed, and pressure shall be held

until the test gauge is stable. At each step, the system test pressure gauge shall be observed from a safe distance for indication of leaks.

> ***NOTE:*** *WARNING. If signs of yielding of failure of the system are observed, pressure shall be slowly decreased to zero.*

After full test pressure is reached, the isolation valve of the pneumatic pressure source shall be closed, and the full test pressure shall be continuously maintained for a minimum of 15 minutes to ensure the quality of the system. During this time, the system test pressure gauge shall be observed from a safe distance for indications of leakage.

Following the application of the full pneumatic test pressure, the pressure shall be reduced to allow for close visual examination. All welds and all flanged and threaded joints shall be examined for evidence of leakage. Local or close inspection of the system shall not be made while the test pressure is above the DP.

> ***NOTE:*** *The applicable NCCS must be referenced for the proper test and inspection pressures and temperatures for the specific system or vessel application. Typically the pneumatic test pressure is 110 percent of the MAWP or Design Pressure, ASME B&PV Code and B31.3, but the specific code and current version must be referenced by the designer specifying the test.*

6.4.7.6 Documentation

A checklist and a report are to be filled out for every pneumatic pressure test and sent to the PSM PSO Administrative Assistant. Use the following NASA C forms, as applicable:

C–4026, Pressure Vessel Pneumatic Test Checklist

C–4010, Pressure Vessel Pneumatic Test Report

C–4020, Piping System Pneumatic Test Checklist

C–4014, Piping System Pneumatic Test Report

6.4.8 Other Leak-Testing Methods

In general, all systems specified by the design engineer shall be leak tested. The leak test is the final test in any test sequence described in this section. It shall be performed only after the system has been hydrostatically or pneumatically tested. A leak test of greater sensitivity than the initial low-pressure gas-leak test shall be used as a final test of system integrity. This final test could be the high-pressure bubble test, the change-in-pressure test, or the mass spectrometer test. Only one of these tests is required for acceptance. The design engineer may specify the test in which the system is pressurized to the normal working pressure of the system. The following equipment, conditions, and procedures are necessary.

6.4.8.1 The Bubble Test

Air or nitrogen gas shall be used for pressurizing the system. The extra sensitivity of helium gas may be warranted only for high-pressure helium and hydrogen systems. Standard NASA-prepared bubble-testing solutions are recommended. Commercial Leak Tec fluid is equivalent to the NASA solution. The piping diagram for high-pressure bubble testing is illustrated in Figure C.4 (Appendix **C**). The system shall be at a temperature that is above the freezing point and below the boiling point of the bubble-testing liquid.

The exterior of the system must be cleaned (when practical) with an approved commercial solvent. It is essential that the surface be clean prior to the application of the soap solution, because oil films or small amounts of soldering flux will destroy the bubble-producing quality of the soap solution. The system shall be slowly pressurized to the normal working pressure of the system.

The bubble-testing liquid should be applied to all joints and seams of the system. Watch for the formation of bubbles. The gas bubbles issuing from a leak will show its precise location. Depressurize the system and repair all leaks before continuing the test sequence.

6.4.8.2 Change-In-Pressure Test

This test is performed by evacuating the interior of the system and monitoring the rate of pressure increase with the pump isolated from the system. Although it is difficult to pinpoint the exact source of a leak with this test, the

overall leak rate of the system can be easily established. Before this test is attempted, be certain that the system has sufficient strength to withstand evacuation.

When the results of this test are analyzed carefully, exceedingly low leak rates can be measured. The sensitivity of this test is comparable to the high-pressure bubble test described previously.

The equipment necessary for this test is as follows:

1. Vacuum gauge.—A thermocouple or Pirani gauge having a range of approximately 1 to 1000 microns is required for this test. The gauge sensing tube shall be connected with as short a tube as possible to the system being evacuated. Because this type of gauge is somewhat inaccurate and the test is based on a relative change, the vacuum gauge does not have to be calibrated. For additional information on the operation of the gauge, check the manufacturer's literature.
2. Vacuum pump.—For most applications, a mechanical (rotary) vacuum pump is desired. The vacuum pump should have a blank-off pressure of no more than 25 microns. The pump shall be connected to the system with as short a length of tubing as possible. To ensure a rapid pump-down time, the evacuation line shall be no smaller than the evacuation inlet of the pump. A flexible connection installed between the pump and the system will reduce vibrations.
3. Vacuum valve.—A valve intended for vacuum usage is required to isolate the system under test. The valve should be located as close to the system as possible and have an opening at least equivalent to the inside diameter of the evacuation line.
4. Thermometer.—A thermometer or thermocouple should be installed in the system to measure the temperature of the evacuated region.

Evacuate the system to a pressure of at least 100 microns. This will allow the pressure rise to be monitored for at least a tenfold increase with the vacuum gauge. Inability to evacuate the system to a pressure of 100 microns can usually be traced to one or more of the following conditions:

- High magnitude of leaks
- System contaminants, particularly water
- Inadequate evacuation system

Isolate the vacuum pump from the system by closing the vacuum valve. Monitor the time, system pressure, and temperature over a suitable time period to establish the leak rate. The leak rate calculation is illustrated in Figure C.5 (Appendix **C**).

The initial evacuation of any system is likely to result in gas evolution, which is often called “outgassing.” The outgassing component of pressure rise may be easily separated from the leakage component by plotting the system pressure as a function of time. Two distinct degrees of curvature are evident in a typical system pressure plot (Figure C.5). Between points A and B, the system pressure rises at a continually decreasing rate; hence, a curve of decreasing slope is evident. Between points B and C, the straight line indicates a uniform rate of pressure increase.

The significance of each curve may be explained by considering the nature of both outgassing and leakage. The rate of outgassing is exponentially dependent on pressure. As the system pressure increases, the rate of outgassing decreases; however, the rate of leakage is constant over the pressure range since the same differential pressure of about 760,000 microns is maintained. Therefore, the initial curve from point A to point B represents both outgassing and leakage, with outgassing being the principal cause of the rate of system pressure rise near point A.

At point B, the system pressure has increased to above the vapor pressure of the outgassing source; therefore, the straight line between points B and C represents system leakage. Only the straight line section of the curve should be used for determining leak rates. The curve between points A and B should be ignored.

6.4.8.3 Mass Spectrometer

A mass spectrometer leak detector is an electrically tuned instrument for detecting the presence of a tracer gas. It is the most sensitive commercially available leak detector. These detectors use a helium tracer gas to detect leaks as low as 10^{-9} cm^3/sec.

Ions of the tracer gas are produced in a source chamber by electron bombardment from a hot tungsten filament. The ions are accelerated electrostatically through an analyzer magnet field. The helium ions are deflected by a permanent magnetic field and collected on a target plate connected to the grid of an electrometer tube. The output of the electrometer tube is amplified and presented on a multirange output meter.

Liquid nitrogen traps, roughing and oil range diffusion pumps, and various valves are incorporated on the mass spectrometer to maintain proper operating conditions in the analyzer tube.

A standard leak is essential if quantitative measurements are to be made, since sensitivity can vary widely as the spectrometer tube becomes contaminated. Large decreases in sensitivity can be encountered when the leak detector is connected to large, separately pumped systems (only a portion of the trace gas entering the leak arrives at the spectrometer tube).

The helium probe consists of a 10^{-4} cm^3/sec leak detector in a probe tube at the end of several feet of flexible tubing. It is used for testing devices that are filled with helium under pressure. Because of the rapid diffusion of helium coming out of a leak, it is unlikely that a leak smaller than 10^{-6} cm^3/sec can be found by this method.

The pressure testing and procedure method of testing is useful in testing large tanks or objects that cannot withstand internal vacuum. The system is pressurized with helium tracer gas, and the exterior of the system is sniffed with the helium probe. When the probe is passed over a leak, the outflowing helium gas is detected. To proceed with the test do the following:

1. Pressurize the system with helium gas to 10 percent of the normal working pressure, but do not exceed 20 psig. High pressure is not desired for this test since it only increases diffusion in air. If the system is large, a tracer gas consisting of a combination of helium and nitrogen gas may be used for testing. The percentage of nitrogen gas to helium gas may be as large as 95 percent by volume.
2. Carefully sniff the exterior of the system with the helium probe. Any helium entering the probe will be recorded as a leak. This test may be made more sensitive by surrounding the helium probe with a small enclosure. The enclosure will prevent wind from rapidly dispersing the helium and allow helium to build up in the enclosure until the concentration is sufficient to be detected by the mass spectrometer.

Vacuum testing is the most sensitive form of leak detection. Here, the system under test is evacuated either with the vacuum system in the leak detector, or if the system is of appreciable size, with an auxiliary pumping system. A helium jet is sprayed over the suspected areas of the system to locate the leaks. Proceed with the vacuum test as follows:

1. Evacuate the system with either the pumping system incorporated in the mass spectrometer or an auxiliary pumping system. Generally, the lower the system pressure, the more sensitive the test. The most sensitive test occurs when the high-vacuum leak detector pumping system can solely maintain the vacuum in the system at or below 10^{-4} mm Hg.
2. Spray the exterior of the system with the helium tracer gas. The tracer gas will be drawn into the system through the leaks and recorded on the mass spectrometer. The exact location of leaks may be determined by using a very fine helium jet or by bagging the suspected area to ensure the accumulation of a helium pocket.
3. Repair each leak immediately on detection, either temporarily, or preferably, permanently. As each leak is repaired, the system pressure will be lowered and smaller leaks may be located.

The mass spectrometer is a highly complicated instrument. The outline for leak testing with a mass spectrometer presented herein is for general information only. Anyone attempting to use a mass spectrometer should be thoroughly familiar with its theory and operation. There is no substitute for properly applied experience in leak detection with a mass spectrometer.

6.4 Verification: Adherence to the requirements of this section is by review of the procedures and system parameters and components used for the test through the submittal and review of the pneumatic test permit by the SHeD process safety engineer and pressure systems manager. Field verification is by on site construction quality assurance personnel or other inspection and signed test reports.

6.5 Cryogenic Systems (GSM Chapter 5 Oxygen Safety, GSM Chapter 6 Hydrogen Safety)

This section discusses stationary cryogenic systems. The CGA defines cryogenic fluids as those with a normal boiling point lower than –238 °F but other authorities set higher boiling points as the criteria. At GRC, cryogenic systems are used to store and distribute cryogenic liquids such as those listed in TABLE 6.2

TABLE 6.2.—CRYOGENIC FLUIDS USED AT GRC

Fluid	Approximate normal boiling point		
	°F	°R	K
Krypton	–243.13	216.54	120.29
Methane	–259	201	111
Oxygen	–297.34	162.32	90.18
Argon	–302.57	157.10	87.28
Nitrogen	–320.45	139.22	77.35
Neon	–410.91	48.76	27.09
Hydrogen	–423.19	36.48	20.27
Helium	–452.07	7.60	4.22

A typical cryogenic system consists of a pressure vessel (called a dewar), pressure-relief devices, control valves, and distribution piping. The dewar is a double-walled pressure vessel with the system fluid contained in the inner vessel. The space between the vessels is filled with a powdered insulation (or is super insulated) and is held at a vacuum with a vacuum pump, thereby providing an insulation barrier for the fluid in the dewar. A control system and pressure building coil allow the dewar to maintain an internal pressure. Cryogenic systems generally operate at pressures below 100 psig. Piping for cryogenic fluid distribution is either vacuum-jacketed or rigid foam insulated to reduce boiloff losses.

6.5.1 Requirements for Cryogenic Vessels and Systems

In addition to conforming to the general requirements for pressure system safety, cryogenic vessels and systems must adhere to specific and unique requirements as follows:

1. Design.—Cryogenic vessels shall be designed in accordance with the ASME Code, Section VIII.
2. Relief device.—The inner vessel of a multi-shell cryogenic vessel shall have relief devices designed and maintained in accordance with Section VIII of the ASME Code. The outer vessel shall have relief protection to allow for a leak or failure of the inner shell.

   Relief valves shall be mounted vertically and with sufficient standoff distance to prevent the valve from icing or failing to operate. Relief valves shall relieve into a vent system or into an area where no harm will come to personnel or equipment. Vacuum insulation spaces shall be provided with over-pressurization protection in case of a leak in the pressure boundary of the inner transfer line.
3. Oxygen.—Comprehensive information on oxygen service is described in Chapter **5** of the Glenn Safety Manual. Design and operation of systems for liquid oxygen storage shall also conform to requirements contained in NFPA 55, Standard for the Storage, Use, and Handling of Compressed Gases and Cryogenic Fluids in Portable and Stationary Containers, Cylinders and Tanks.
4. Hydrogen.—Comprehensive information on hydrogen service is described in Chapter **6** of the Glenn Safety Manual, and ANSI/AIAA G–095–2004, Guide to Safety of Hydrogen and Hydrogen Systems. Design and operation of systems for liquid hydrogen storage shall also conform to requirements contained in NFPA 55, Standard for the Storage, Use, and Handling of Compressed Gases and Cryogenic Fluids in Portable and Stationary Containers, Cylinders and Tanks.

6.5.2 Testing

To ensure the safety of personnel and equipment, testing and recertification of cryogenic systems are required. New, altered, and repaired systems shall be cold-shock tested to verify the compatibility of material, equipment, and fasteners for cryogenic service. Prior to cold-shock testing, the vessel, components, and piping to be tested shall be inspected for proper assembly. Cold-shock testing shall be done in well-ventilated areas, preferably outdoors, to prevent asphyxiation of personnel. Such tests shall be conducted in accordance with Section **6.5.** Pressure testing of new, altered, and repaired systems shall also be performed in accordance with Section **6.4**.

6.5.3 Safety Considerations

Because of the nature of cryogenic systems, the following precautions should be taken:

1. Avoid contact with fluid or equipment cooled to cryogenic temperatures, since cryogenic systems contain fluids that are extremely cold.
2. The vapors of many cryogenic fluids are heavier than air; therefore avoid areas in unventilated spaces where low pockets of cryogenic vapor may accumulate.
3. Provide proper ventilation for all portable dewar fill stations. Low-oxygen alarms should be used if proper ventilation cannot be provided.
4. Vent relief devices to an area where no harm to personnel or equipment will result. Vent cans should be used wherever possible.
5. Adhere to guidelines for personal protective equipment, given in Chapter **15** of the Glenn Safety Manual.

6.5 Verification: Verification of the requirements is performed during PV/S certification and or other design reviews and safety permit reviews or facility inspections.

6.6 Safety-Related Switches and Pressure-Indicating Devices (*NASA–STD–8719.17*)

Pressure indicating devices and transducers convey information on the operating state of associated systems and therefore require regular validation to assure accurate pressure indications. Failure of these devices to accurately convey system pressure information could result in unsafe actions that jeopardize equipment and personnel safety. The criticality of these devices must be assessed, and regular function verification must be performed by system owner/operators. Responsible organizations fall into four categories: Institution, Central Process Systems, Test, and Other.

6.6.1 General

6.6.1.1 Design and installation

Safety-related pressure-indicating devices shall meet an appropriate National Consensus Code/Standard (NCS) such as ASME B40.100, UL-404, or MIL-G-18997. The minimum acceptable accuracy across the system design pressure range for each safety-related pressure indicator shall be in accordance with ASME B40.100 and the design specification.

6.6.1.2 Catastrophic Failure Potential

If catastrophic failure of a gauge is feasible in a manner that can cause personnel injury, the pressure gauge shall be equipped with a relief case/enclosure.

6.6.2 Function Validation

The accuracy of all safety-related pressure indicators shall be periodically verified as specified by category below.

6.6.2.1 Institutional Devices

Institutional pressure-indicating devices and transducers are those associated with facility systems including steam (both facility Low Pressure and distributed High Pressure), hot water, condensate, local service air, local hydraulics, domestic water, HVAC, CNG, etc. Devices must be maintained in accordance with NPR 8831.2, Facilities Maintenance and Operations Management. Gauges and pressure indicating devices must be function verified at the same interval as relief devices within the system. Generally, steam and hot water gauges are validated annually; air and domestic water gauges are validated no less frequently than once every 5-years. Function validation must be a documented part of the Preventative Maintenance (PM) plan. This is typically accomplished by noting the requirement in technician Work Instructions associated with the PM plan. Records of completed work must be maintained in the Computerized Maintenance Management System (MAXIMO, MP-2, EAM, etc.).

6.6.2.2 Central Process Systems

Central Process Systems pressure-indicating devices and transducers are those associated with distributed base-wide systems including 40/150/450 psig Combustion Air System (CAS), Service Air (sometime called shop air), Altitude Exhaust, etc. Devices must be maintained in accordance with NPR 8831.2, Facilities Maintenance and Operations Management. Gauges and pressure indicating devices must be function verified at the same interval as relief devices within the system. Generally, air devices above 150 psig are validated no less frequently than every three years, air devices below 150 psig are validated no less frequently than once every 5-years. Function validation must be a documented part of the Preventative Maintenance (PM) plan. This is typically accomplished by noting the requirement in technician Work Instructions associated with the PM plan. Records of completed work must be maintained in the Computerized Maintenance Management System (MAXIMO, MP-2, EAM, Etc.).

6.6.2.3 Test Facilities

Test Facility pressure-indicating devices and transducers are those associated with test cells and discrete test facilities. Systems include end delivery of CPS products (40/150/450 psig, for example), as well as standalone pressure systems such as K-bottle systems, local hydraulic systems, etc. For test operations, GRC regulations define Inspection, Measuring, and Test Equipment (IMTE) and require all IMTE associated with pressure system be assessed for risk and documented in a Quality and Safety Equipment list. This assessment is in conjunction with Safety Permit and specifies mandatory calibration/accuracy requirements. Records of these calibrations are retained in IMTE database or as specified in local policy documents below. Note that IMTE encompasses a broad range of transducers and instrumentation; not merely gauges. Pertinent documents include:

GLPR-8730.6B	Control of IMTE
GLP-FT-8080.03	Aero Test Engineering
GLP-FT-8080.04	Space Test Engineering
GLP-FT-8080.13	Quality Manual for IN SITU Calibrations
GLF-FT-8080.06	Quality and Safety Equipment List

6.6.2.4 Other (uncategorized) Pressure-indicating Devices and Transducers

This category includes non-temporary devices that do not fall in any of the above categories. An example would be Tenant owned devices. These must be function verified on an interval no less frequent than that of the Relief Devices of the system. STD-8719.17A contains frequencies for various types of systems/commodities. Note temporary contract equipment does not generally fall under this category. Such temporary equipment is covered by Health And Safety Plans (HASP), local permit, and other GRC procedures specific to construction and similar temporary operations.

6.6 Verification: Verification of these requirements is made by auditing component maintenance records and or system testing records (typically at the time of safety permit reviews and or certification).

7.0 RECORDS

7.1 PSO Certification Documents

- NDE reports.—Maintained by the PSO.
- Risk assessment report.—Maintained by the PSO.
- System certification report.—Maintained by the PSO.
- Pressure system database.—Maintained by the PSO.

7.2 NASA C Forms

C–83, Safety Variance Request.—Maintained by SHeD.

C–83A, Safety Variance Change Request.—Maintained by SHeD.

C–802, Pneumatic Test Request.—Maintained by the PSO.

C–804, Pneumatic Test Permit.—Maintained by the PSO.

C–4026, Pressure Vessel Pneumatic Test Checklist.—Maintained by the PSO.

C–4010, Pressure Vessel Pneumatic Test Report.—Maintained by the PSO.

C–4020, Piping System Pneumatic Test Checklist.—Maintained by the PSO.

C–4014, Piping System Pneumatic Test Report.—Maintained by the PSO.

C–4022, Pressure Vessel Hydrostatic Test Checklist.—Maintained by the PSO.

C–4016, Pressure Vessel Hydrostatic Test Report.—Maintained by the PSO.

C–4018, Piping System Hydrostatic Test Checklist.—Maintained by the PSO.

C–4012, Piping System Hydrostatic Test Report.—Maintained by the PSO.

C–4027, Standard Exclusion Request.—Maintained by the PSO.

C–4025, Weld Request Form.—Maintained by the PSO.

8.0 REFERENCES

Document number	Document name
NPD 8710.5	NASA Safety Policy for Pressure Vessels and Pressurized Systems
NPR 8715.3	NASA General Safety Program Requirements
NASA–STD–8719.17	NASA Requirements for Ground-Based Pressure Vessels and Pressurized Systems (PV/S)
29 CFR Part 1910.119	OSHA Occupational Safety and Health Standards, Process Safety Management
49 CFR	Department of Transportation (DOT) Regulations
ASME B&PV Code Section VIII	ASME Boiler and Pressure Vessel Code
ANSI/NB–23	National Board Inspection Code
ASME B31 series	ASME Piping Codes
CGA Standards	Compressed Gas Association Standards
CGA P–1	Safe Handling of Compressed Gases in Containers
CGA S–1.1	Pressure Relief Device Standards—Part 1—Cylinders for Compressed Gases
CGA S–1.3	Pressure Relief Device Standards—Part 3—Stationary Storage Containers for Compressed Gases
CGA E–4	Standard for Gas Pressure Regulators
API RP(s)	American Petroleum Institute Recommended Practices
API 2000	Venting Atmospheric and Low-Pressure Storage Tanks
API 510	Pressure Vessel Inspection Code
API 520	Sizing, Selection, and Installation of Pressure Relieving Devices in Refineries
API 521	Guide for Pressure-Relieving and De-pressuring Systems
Flexible Hose NCS References	
SAE J1273	Recommended Practices for Hydraulic Hose Assemblies

SAE J517	Hydraulic Hose
SAE ARP1658	Visual Inspection Guide for Installed Hose Assemblies
ISO 1436–1	Rubber hoses and hose assemblies—Wire-braid-reinforced hydraulic types—Specification—Part 1: Oil based fluid applications
ISO 1436–2	Rubber hoses and hose assemblies—Wire-braid-reinforced hydraulic types—Specification—Part 2: Water based fluid applications
	Parker Safety Guide for Selecting and Using Hose, Tubing, Fittings and Related Accessories
CGA E–9	Standard for Flexible, PTFE-Lined Pigtails for Compressed Gas Service

APPENDIX A.—DEFINITIONS AND ACRONYMS

American Petroleum Institute (API)

American Society of Mechanical Engineers (ASME)

Boiler and Pressure Vessel Code (B&PV Code)

Code of Federal Regulations (CFR)

Compressed Gas Association (CGA)

Certification.—The official approval process for ensuring and documenting the integrity of pressure vessels and pressurized systems.

Department of Transportation (DOT)

Design pressure (DP)

Glenn Research Center (GRC)

International Organization for Standardization (ISO)

Leak check.—A pre-pressure test of a system or vessel at a pressure of approximately 5 to 10 psig to identify assembly or fabrication defects before subjecting the system to test pressure.

Liquid hydrogen (LH_2)

Liquid nitrogen (LN_2)

Maximum allowable working pressure (MAWP)

NASA Policy Directive (NPD)

NASA Procedural Requirement (NPR)

National Board Inspection Code (NBIC)

National Consensus Standard (NCS)

Nondestructive Examination (NDE).—The application of technical methods to examine materials or components in ways that do not impair future usefulness and serviceability in order to detect, locate, measure, and evaluate flaws; to assess integrity, properties, and composition; and to measure geometrical characteristics.

Operating pressure.—The pressure at the top of a vessel at which it normally operates. It shall not exceed the maximum allowable working pressure, and it is usually kept at a suitable level below the setting of the pressure-relieving devices to prevent their frequent opening.

Piping and instrument diagram (P&ID)

Pressure Systems Manager (PSM).—The person responsible for implementation of NPD 8710.5, and NASA STD–8719.17 at a NASA facility.

Pressure Systems Office (PSO)

Pressure test.—System or vessel test under conditions required by the applicable code. The specified test pressure usually exceeds the maximum allowable working pressure or design pressure.

Pressure vessels and pressurized systems (PV/S).— Pressure vessels and pressurized systems within the scope of NPD 8710.5, NASA Safety Policy for Pressure Vessels and Pressurized Systems, and this standard.

Safety and Health Division (SHeD)

Society of Automotive Engineers (SAE)

Standard (STD)

APPENDIX B.—RESTRICTED DISTANCE FOR PNEUMATIC PRESSURE TESTING

Safety of personnel, buildings, and equipment must be of primary concern during a pneumatic pressure test. A sudden rupture will generate a pressure wave that can cause damage. Some consequences of blast overpressure are listed in Table B.1

TABLE B.1.—OVERPRESSURE EFFECTS

Overpressure, psi	Effect
0.5	Shatters glass windows
1	Knocks personnel down
1 to 2	Causes failure of standard house construction
2 to 3	Shatters concrete or block walls 8 in. thick
5 to 15	Ruptures eardrum
30 to 40	Damages lungs
130 to 180	Kills 50 percent of people

During the application of pneumatic test pressure, all personnel shall be located a safe distance from the test (outside of a predetermined restricted area). Buildings, major structures, and hardware or equipment inside this restricted area shall be protected, or the system to be tested shall be moved to a safe area. If this is not possible, the risk of damage shall be considered and accepted by the appropriate Glenn Research Center (GRC) or NASA program management.

Assuming a 0.5 psi or less overpressure is safe for personnel, we can determine the restricted distance for pneumatic tests. The restricted testing distance for a 1000 ft^3 system is given in Figure C.6 (Appendix **C**). The graph in Figure C.6 was derived from a curve showing pounds of open-field TNT-equivalent explosive per 1000 ft^3 of gas as a function of rupture pressure. The figure was originally published in "Liquid Hydrogen Storage and Transmission," by the Los Alamos Scientific Laboratory, Liquid Hydrogen Safety Committee. Although the curve was plotted for hydrogen gas, the difference in adiabatic expansion between air and hydrogen is slight. The TNT-equivalent per 1000 ft^3 of gas has been converted into restricted distance by information originally supplied by the Bureau of Mines, Boulder, Colorado.

Use of the curve in Figure C.6 is illustrated in Example 1. The curve can be applied to systems of other volumes. The restricted distance need not be strictly adhered to if alternate precautions are taken for personnel. Some alternate safety precautions include locating personnel behind adequate blast shields, sandbags, or other unmovable objects. However, these shields are primarily for protection from fragments and not blast waves (which will travel around the shield). Sample calculations for determining the restricted distance, adjusted for the effect of volume, during a pneumatic test are given below.

A computer calculation is also provided on the PSO web site (http://pso.grc.nasa.gov/).

B.1 Example 1.—Method for Calculating Restricted Distance for a Pressure Vessel

Given the following:

$$\text{Pressure vessel volume } (V_{\text{Vessel}}) = 300 \cdot \text{ft}^3$$

$$\text{MAWP} = 2000 \cdot \frac{\text{lb}}{\text{in}^2}$$

$$\text{Pneumatic test pressure } (P_{\text{test}}) = 2000 \cdot \frac{\text{lb}}{\text{in}^2} \cdot 1.1 = 2200 \cdot \frac{\text{lb}}{\text{in}^2}$$

From Figure C.6, the restricted distance for a 1000 ft^3 system with

$$P_{\text{test}} = 2200 \cdot \frac{\text{lb}}{\text{in}^2} \quad \text{is} \quad D_{1000} = 500 \cdot \text{ft}$$

The formula to obtain the restricted distance for the tank volume is

$$D_{\text{Vessel}} = \frac{D_{1000} \cdot \sqrt[3]{V_{\text{Vessel}}}}{10 \cdot \text{ft}}$$

Therefore, the restricted distance for the pressure test is

$$D_{\text{Vessel}} = \frac{500 \cdot \text{ft} \cdot \sqrt[3]{300 \cdot \text{ft}^3}}{10 \cdot \text{ft}}$$

$$D_{\text{Vessel}} = 334 \text{ ft}$$

B.2 Example 2.—Method for Calculating Restricted Distance for a Research Rig

1. Determine the total system volume.

Given the MAWP for the system:

$$\text{MAWP} = 240 \frac{\text{lb}}{\text{in}^2}$$

Given a 100 cm^3 sample cylinder:

$$V_{\text{cylinder}} = 100 \text{ cm}^3 \quad \text{or} \quad V_{\text{cylinder}} = 3.531 \cdot 10^{-3} \cdot \text{ft}^3$$

Given system tubing with an outer diameter of 0.25 in. with an 0.035-in. wall, the cross-sectional area of the tube is

$$A_{\text{tube}} = \frac{\pi \cdot [0.25 \cdot \text{in.} - (2 \cdot 0.035 \cdot \text{in.})]^2}{4} \qquad A_{\text{tube}} = 0.0254 \cdot \text{in.}^2 \quad \text{or} \quad A_{\text{tube}} = 1.767 \cdot 10^{-4} \cdot \text{ft}^2$$

Given a conservative estimate that there is 20 ft of tubing in the system, the volume of the tubing is

$$V_{\text{tube}} = 20 \cdot \text{ft} \cdot A_{\text{tube}} \qquad V_{\text{tube}} = 3.534 \cdot 10^{-3} \cdot \text{ft}^3$$

Therefore, the total system volume is

$$V_{\text{total}} = V_{\text{cylinder}} + V_{\text{tube}} \qquad V_{\text{total}} = 7.065 \cdot 10^{-3} \cdot \text{ft}^3$$

2. Determine the restricted distance, given the test pressure and total system volume.

The test pressure to be applied to the system,

$$P_{\text{test}} = 1.1 \cdot \text{MAWP} \qquad P_{\text{test}} = 264 \cdot \frac{\text{lb}}{\text{in}^2}$$

From Figure C.6, the restricted distance for a 1000 ft^3 system with

$$P_{\text{test}} = 264 \cdot \frac{\text{lb}}{\text{in}^2} \quad \text{is} \quad D_{1000} = 200 \text{ ft}$$

The correction formula to obtain the restricted distance for the actual system volume is

$$D_{\text{system}} = \frac{D_{1000} \cdot \sqrt[3]{V_{\text{total}}}}{10 \cdot ft} \qquad D_{\text{system}} = \frac{200 \cdot ft \cdot \sqrt[3]{7.065 \times 10^{-3} \cdot \text{ft}^3}}{10 \cdot \text{ft}}$$

Therefore, the restricted distance for the pressure test is

$$D_{\text{system}} = 3.8 \text{ ft}$$

APPENDIX C.—FIGURES

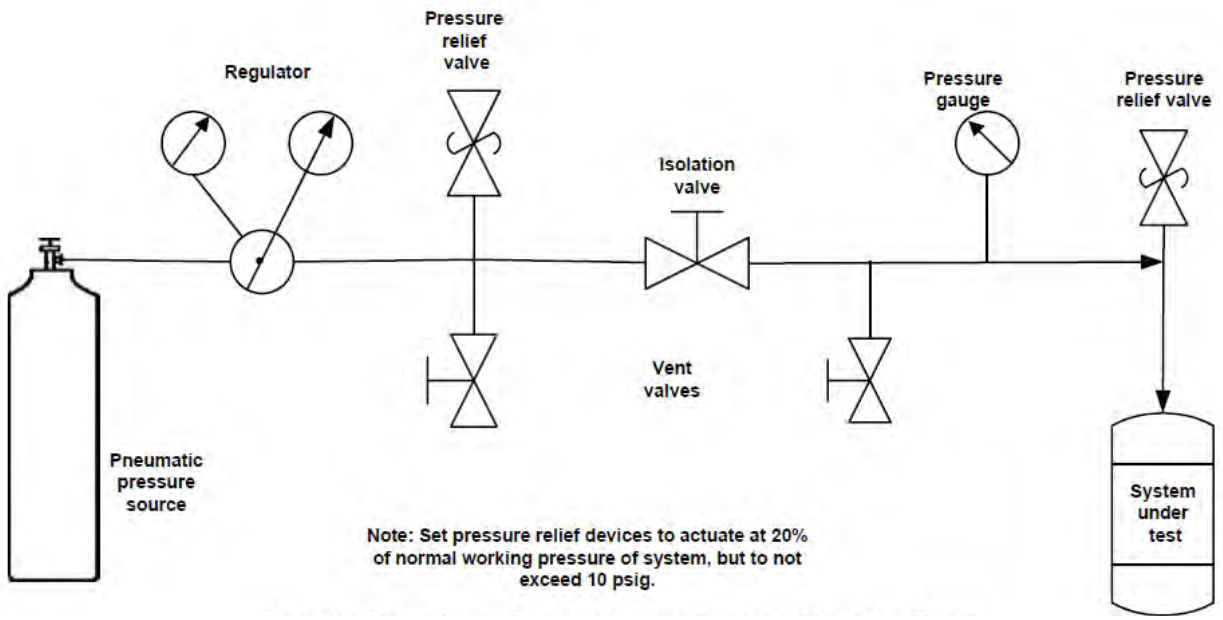

Figure C.1.—Typical piping schematic for low-pressure gas-leak test at 5 to 10 psig.

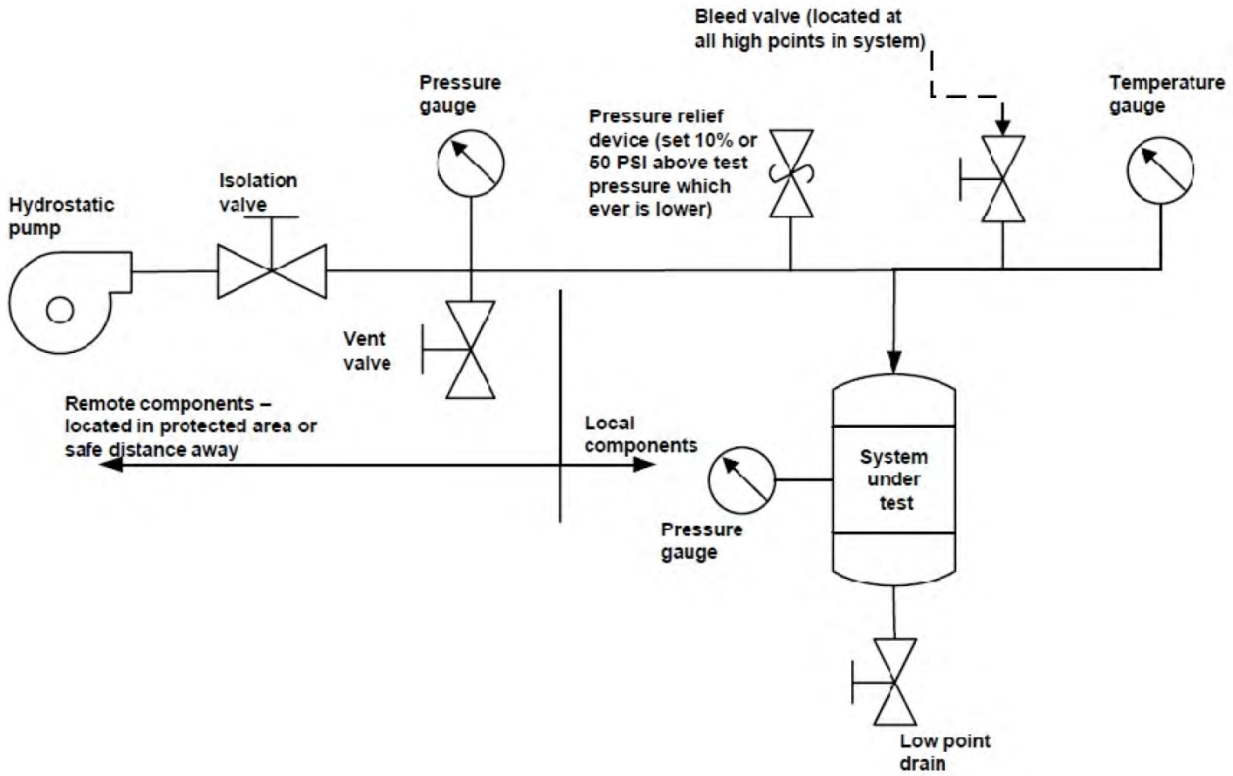

Figure C.2.—Typical piping schematic for hydrostatic pressure test.

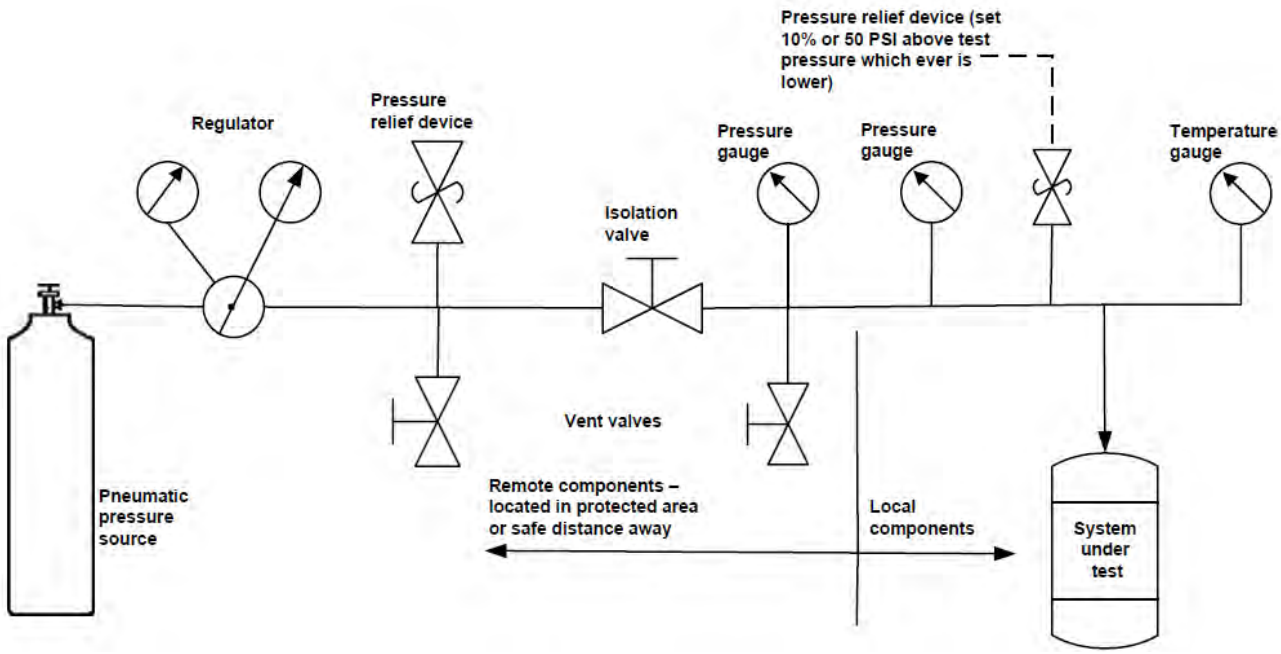

Figure C.3.—Typical piping schematic for pneumatic pressure test.

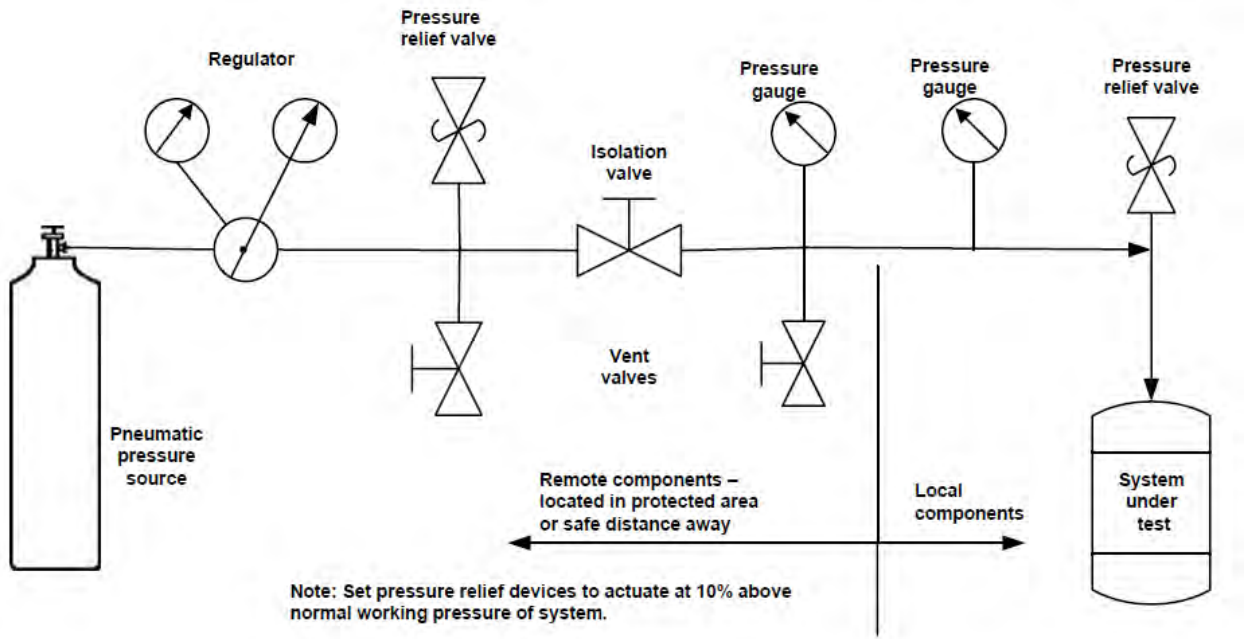

Figure C.4.—Typical piping schematic for operating pressure test.

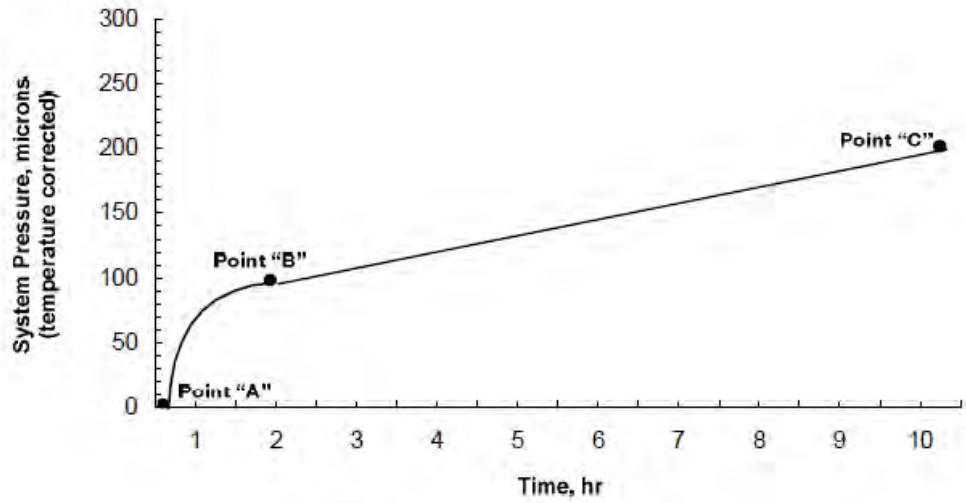

At point B, the system pressure has increased to above the vapor pressure of the outgassing source; therefore, the straight line between Points B and C represents system leakage. Only the straight line section of the curve should be used for determining leak rates. The curve between points A and B should be ignored.

EXAMPLE: Leak rate determined from figure 5

$$\text{Leak rate} = \frac{(200 - 100)\ \text{microns} \times 1\ \text{liter}}{(10\text{-}2)\ \text{hours}} = 12{,}5\ \frac{\text{micron liters}}{\text{hours}}$$

$$\frac{12{,}5\ \text{micron liters}}{\text{hours}} \times \frac{1000\ \text{cm}^3}{\text{liter}} \times \frac{1\ \text{atmosphere}}{760{,}000\ \text{microns}} = 0{,}0164\ \frac{\text{atmosphere cm}^3}{\text{hour}}$$

Figure C.5.—Typical plot of system pressure.

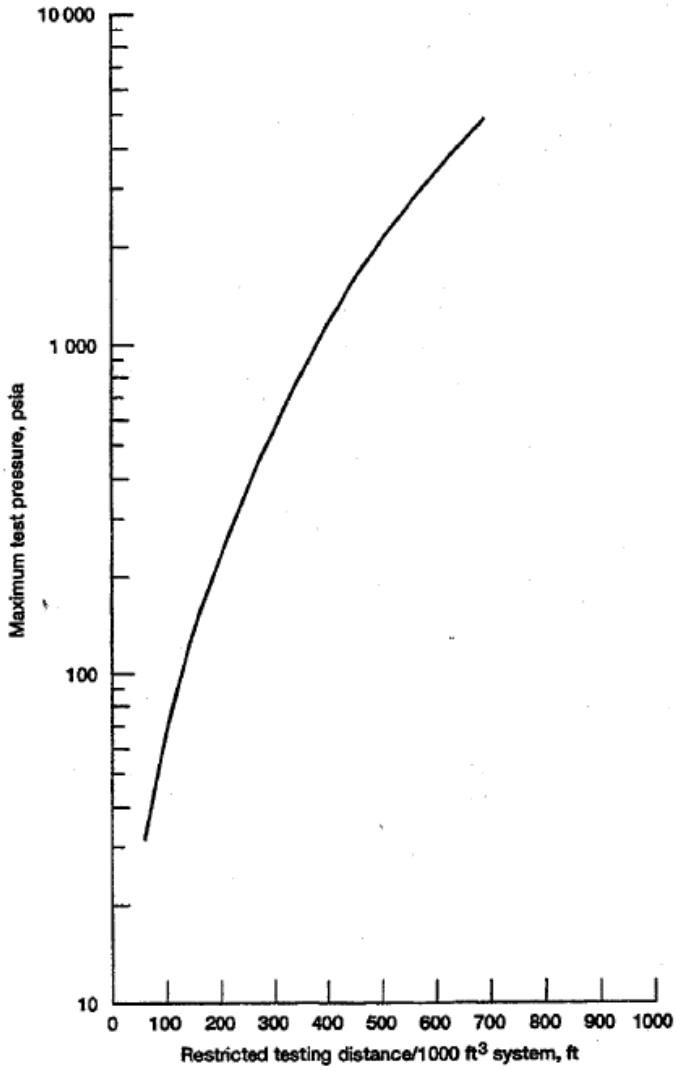

Figure C.6.—Restricted distance for pneumatic pressure testing.

Contents

1.0 PURPOSE 3
2.0 APPLICABILITY 3
3.0 BACKGROUND 3
4.0 POLICY 3
5.0 RESPONSIBILITIES 4
5.1 Area Safety Committees 4
5.2 Electrical Applications Safety Committee 4
5.3 Process Systems Safety Committee 4
5.4 Electrical Systems Managers 4
5.5 Supervisory Personnel 4
5.6 Qualified Person 5
5.7 Qualified Operator (Switch person) 5
6.0 REQUIREMENTS 5
6.1 Codes, Standards and Instructions 5
6.1.1 National Electrical Code (NEC) (*NFPA 70)* 5
6.1.2 National Electrical Safety Code (NESC) (*IEEE C2)* 5
6.1.3 Standard for Electrical Safety in the Workplace (*NFPA 70E)* 5
6.1.4 Occupational Safety and Health Act (OSHA) (*29 CFR 1910 and 29 CFR 1926)* 5
6.1.5 NASA General Safety Program Requirements (*NPR 8715.3)* 6
6.1.6 Electric Power System Operating Instructions *(LVEPS–OI xx and HVEPS–OI xx)* 6
6.2 Electrical Shock *(NFPA 70E)* 6
6.3 Medical/Physical Requirements *(NPR 8715.3, Section 7.4)* 7
6.4 Electrical Isolation *(NFPA 70E, Article 130*) 7
6.5 Lockout/Tagout Procedures *(OSHA 29 CFR 1919.147)* 8
6.6 Consider All Electrical Systems Energized *(NFPA 70E, Article 120)* 8
6.7 Buddy System *(GLM–QS–1700.1)* 8
6.8 Work in a Confined Space (*ANZI Z117.1*) 9
6.9 General Electrical Considerations *(LVEPS and HVEPS OIs)* 9
6.9.1 Configuration Control 9
6.9.2 Validation of Operating Equipment 9
6.9.3 Separately Derived Electric Power Systems 9
6.9.4 Battery Systems 10
6.9.5 Instrument Transformers 10
6.9.6 Capacitors 11
6.10 Hazardous (Classified) Locations *(NFPA 70, Articles 500 through 516)* 11
6.11 Special High-Voltage Electrical Safety Considerations *(HVEPS–OIs)* 12
6.11.1 High-Voltage Electrical Power System Operating Instructions *(HVEPS–OIs)* 12
6.11.2 Connections to High-Voltage Supply 12
6.11.3 NASA GRC High-Voltage Designated Safety Person (DSP) 12
6.11.4 Entry Into Electric Supply Stations 12
6.11.5 Work On or Near High-Voltage Facilities 12
6.11.6 Work in Electric Supply Stations or Near Exposed Lines or Apparatus 13
6.11.7 High-Voltage Switching 13
6.11.8 Cutting High-Voltage Cables 14
6.11.9 Fuses (Removal and/or Replacement) 14
6.11.10 Lifting and Construction Equipment, Vehicles, or Personnel Near Exposed Energized Electrical Parts 14
6.12 Personal Protective Equipment (for additional information on PPE see GSM Chapter 15) 14
6.12.1 Hard Hats *(29 CFR 1910.135)* 14
6.12.2 Eye Protection *(ANSI Z87.1)* 14
6.12.3 Safety Shoes *(29 CFR 1910.136)* 15
6.12.4 Rubber Insulating Gloves *(ASTM D 120 and ASTM F 496)* 15
6.12.5 Hot Sticks *(ANSI/IEEE Standard 516)* 15

6.12.6 Protective Clothing *(ASTM F 1506 and ASTM F1959)* 15
6.13 Equipment Safety Tests and Checks *(ANSI/IEEE or NETA)* 15
6.13.1 Tests To Be Performed Prior to Initial Energization 15
6.13.2 Circuit-Interrupting Devices 16
6.13.3 Protective System Checks 16
6.13.4 High-Voltage Insulation Testing 17
6.14 Experimental Equipment *(GLM–QS–1700.1)* 17
6.14.1 Safety Responsibility 17
6.14.2 Experimental, Developmental, or Flight-Level Electrical/Electronic Equipment 17
6.14.3 Experimental Equipment Utilizing High-Voltage Capacitor Banks 18
6.15 Training (NASA General Safety Program Requirements NPR 8715.3C) 18
6.15.1 Initial Training 18
6.15.2 Employee Retraining 19
7.0 RECORDS 19
8.0 REFERENCES 19
APPENDIX A.—Definitions and Acronyms 21
APPENDIX B.—Energized Electrical Work Permit (NASA C–780) 23
APPENDIX C.—Electrical Power System Operating Instructions 25
APPENDIX D.—Examples of Signs, Labels, and Tags 26

List of Tables

Table 6.1—From NFPA "The Electrical Safety Program" (Table 7.1) 6
Table 6.2.—Minimum hot stick lengths (ft) 13
Table 6.3.—Testing Standards 16

List of Figures

Figure D.1.—Hazardous Area Warning Sign 26
Figure D.2.—Supply Station Entry Sign 26
Figure D.3.—Arc Flash Label 27
Figure D.4.—DANGER DO NOT OPERATE Tag 27
Figure D.5.—CAUTION DO NOT OPERATE Tag 28

Chapter 8—Electrical System Safety

Note: *The current version of this chapter is maintained and approved by the Safety and Health Division (SHeD). The last revision date of this chapter was June 2011. The current version is located at http://smad-ext.grc.nasa.gov/shed/pub/gsm/gsm-manual.pdf. Approved by Chief of Safety and Health Environmental Division.*

1.0 PURPOSE

This chapter sets forth minimum electrical safety guidelines and standards within the framework of the Glenn Research Center (GRC) safety policies and constraints. Electrical systems safety encompasses the responsibilities, regulations, and requirements that ensure a safe working environment for personnel engaged in electrical work at GRC. Minimizing hazards such as shock, arc flash, and arc blast is necessary for providing an electrically safe work environment.

2.0 APPLICABILITY

The provisions of this chapter are applicable to all NASA employees and to all other agencies, organizations, and contractor personnel, who design, construct, inspect, operate, maintain, or manage electrical systems within the confines of GRC at Lewis Field and Plum Brook Station. It is for professional designers, engineers and craftsman; it is not an instructional manual for untrained personnel nor is it a substitute for the detailed procedures judged necessary for the safe conduct of a specific electrical task.

3.0 BACKGROUND

The authority for the electrical systems safety chapter is derived from the "NASA General Safety Program Requirements," NASA Procedural Requirement (NPR) 8715.3C, Chapter 3.6. Electricity is a common source of energy that GRC personnel are exposed to on a daily basis. It provides lighting, power to computers, and numerous manners of creature comfort. Electricity is something we have grown accustomed to using and feeling safe around, but it is that feeling of complacency that can turn electricity into one of the most dangerous and unforgiving energy sources we are exposed to. Numerous personnel injuries and fatalities have occurred through the years because unqualified persons have exposed themselves to unsafe and unguarded sources of electricity. Even trained personnel have lost their lives because of unforeseen circumstances. Electricians may think that an electrical-related accident or injury cannot happen to them, or even worse, may accept that risks are just part of the job. Accidents are not prevented based on one's knowledge of electricity; they occur because of unforeseen circumstances that place you in harm's way. Codes, standards, and regulations, listed later in this chapter, have been put in place so that trained personnel take the proper precautions to safeguard against incidents and mishaps. If a conflict in procedure arises between this chapter and local, State or Federal regulations the most stringent requirements shall apply.

GRC, Lewis Field and Plum Brook Station, is varied in its electrical systems. There are high- and low-voltage, protective/security, central process, and research systems that differ in the types of work performed within and on these systems as well as hazards these systems might introduce. There are indoor, outdoor (including substations with exposed energized equipment), and underground (manholes/vaults, duct banks, etc.) components that make up these electrical systems. This document describes the different types of activities that take place on the electrical systems at GRC as well as the different voltage exposure levels to personnel. It describes the responsibilities of both personnel who are in charge of and those that work on these systems and the minimum training required.

4.0 POLICY

It is GRC policy that electrical systems shall be designed, operated, and maintained to adequately control hazards likely to cause death or serious physical harm or severe system damage. This chapter provides the minimum requirements for the safe completion of tasks within the GRC Electrical Systems. Unless specifically stated otherwise in this document, proper work standards and safe procedures shall follow the recommendations of the National Electric Code (NEC), National Electrical Safety Code, Standard for Electrical Safety in the Workplace, and the Occupational Safety and Health Administration (OSHA). These codes and standards are explained in greater detail later in this chapter. Variances to these codes or standards must be approved, in writing through the GRC Safety, Health and Environmental Division (SHED) and by the Authority Having Jurisdiction (AHJ) (see Appendix **A** Definitions).

5.0 RESPONSIBILITIES

Center SMA Directors shall develop required safety certification programs for their center (NPR 8715.3, Section 7.4 Requirement 25106). Medical offices and cognizant health officials shall determine the need for physical and medical examinations including their depth, scope, and frequency to support certification requirements.

Specific responsibilities of individuals or organizations tasked with establishing safety requirements for electrical systems are as follows:

5.1 Area Safety Committees

The Area Safety Committees conduct third-party reviews of all proposed installations, modifications, and operations in their assigned areas, to ensure that all electrical systems meet minimum design, operational, and safety standards. They should also consider secondary sources of power for installations that are unable to withstand a power outage.

5.2 Electrical Applications Safety Committee

The Electrical Applications Safety Committee (EASC) reviews tasks in all major electrical power systems (e.g. Substations, 10X10 and 8X6 Drives, Central Air Equipment Building). This committee is primarily responsible for high-voltage electrical power systems; however, it also, upon request, reviews new additional or modified electrical applications and advises Area and Special Safety Committees concerning electrical systems safety. The Committee also provides technical oversight to the GRC Arc Flash protection program. The EASC issues operating safety permits for the GRC Lewis Field and Plum Brook Station high-voltage electric power distribution systems and for the high-voltage variable frequency electric power system in building 23. This Committee reviews and permits any construction, maintenance, or repair activity that will modify a permitted system's one-line diagram or that will require a crew to work in the vicinity of high-voltage lines or equipment, both inside and outside of electric supply stations, on the GRC Lewis Field or Plum Brook Station premises.

5.3 Process Systems Safety Committee

The primary responsibility of the Process Systems Safety Committee is to ensure that the Central Process Systems are designed and operated safely. The Committee conducts third-party reviews of all proposed installations, modifications, and operations that could affect systems specifically assigned to this Committee, to ensure that all electrical systems meet minimum design, operational, and safety standards.

5.4 Electrical Systems Managers

Systems Managers are members of the Facilities Division (FD) and manage the systems listed.

- High-voltage Systems Manager
- Low-voltage Systems Manager
- Life Safety and Security Systems Manager
- Central Process Systems, Electrical Systems Manager (Switchgear, Motors, Drives, etc.)
- Central Process Systems, Control Systems Manager (Valve controls, Process Controls, etc.)

Work done on or near these systems shall only be accomplished with proper documentation (e.g. facility change requests, safety permits) and Systems Manager approval. In some areas these Systems Managers have authored specific instructions to be adhered to when working on these systems.

5.5 Supervisory Personnel

Supervisory personnel are responsible for ensuring that the requirements of this chapter are adhered to in the design, construction, modification, operation, and maintenance of electrical systems. Supervisory personnel are responsible for ensuring that employees are trained in safety-related work practices, safety procedures, and other personnel safety requirements that pertain to their respective job assignments. Supervisors shall not permit employees to work in an area where they are likely to encounter electrical hazards unless they have been trained to recognize and avoid the hazards. Training requirements to be considered qualified are addressed in;

- 29 CFR 1910.269(a)(2), which covers the operation and maintenance of electric power generation, control, transformation, transmission, and distribution lines and equipment and
- National Fire Protection Association (NFPA) 70E, Article 110, which covers employees who face a risk of electrical hazard that is not reduced to a safe level by the applicable electrical installation requirements. A qualified person shall be trained and knowledgeable of the construction and operation of equipment or a

specific work method and be trained to recognize and avoid the electrical hazards that might be present with respect to that equipment or work method.

Supervisors shall maintain records as needed (in conjunction with SATERN Training Records) to show employee qualifications. The employees' supervisor will be involved with determining the "Disciplinary Actions" as required for their employees' failures to meet the requirements set forth in the Glenn Safety Manual.

5.6 Qualified Person

A qualified person has skills and knowledge related to the construction, maintenance, and operation of the electrical equipment and installations and has received safety training on the hazards involved. Such persons shall also be familiar with the proper use of the special precautionary techniques, personal protective equipment (PPE), including arc flash, insulating and shielding materials, and insulated tools and test equipment (see NFPA 70E, Article 110). A person can be considered qualified with respect to certain equipment and methods but still be deemed unqualified for others. Qualified persons are responsible for adhering to the requirements set forth in this chapter in the accomplishment of their assigned tasks.

5.7 Qualified Operator

A qualified operator is a qualified person (see previous Section **5.6**) who has also received site-specific knowledge of both the equipment being operated and the system(s) it may affect and who has received instruction on lockout and/or tagout through the GRC Lockout/Tagout Program.

6.0 REQUIREMENTS

All personnel performing work on the various electrical systems at GRC shall have a working knowledge of the following documents, procedures, and policies and shall comply with the requirements therein. If a conflict in procedure or policy arises between this chapter and local, State or Federal regulations, the most stringent requirements shall apply. Organizations involved in these tasks shall, upon request, provide support information and/or documentation (Including training records if not available through SATERN) to SHeD to show compliance with these requirements.

6.1 Codes, Standards and Instructions

The following codes, standards, and instructions relate to the safe design, installation, construction, operation, and maintenance of electric power systems at GRC. The latest versions of these publications/documents shall be adhered to.

6.1.1 National Electrical Code (NEC) (*NFPA 70)*

The NEC (NFPA 70) covers electrical conductors and equipment installed within or on public and private buildings and other premises. This code is the primary code covering design and installation of electrical power systems. This document also covers electrical requirements for Hazardous Classified locations where there is a potential for fire and explosion because of flammable gases or vapors, flammable liquids, combustible dust, or ignitable fibers or flyings.

6.1.2 National Electrical Safety Code (NESC) (*IEEE C2)*

The NESC (Institute of Electrical and Electronics Engineers (IEEE) and American National Standards Institute (ANSI) C2) provides rules for the practical safeguarding of persons during the installation, operation, or maintenance of electric supply and communication lines. ***(Substations facilities & distribution systems, applies to utilities and similar systems associated with multi-building industrial complexes).***

6.1.3 Standard for Electrical Safety in the Workplace (*NFPA 70E)*

This standard addresses electrical safety requirements for employee workplaces that are necessary for the practical safeguarding of employees during activities downstream of the electrical service point such as the installation, operation, maintenance, and demolition of electric conductors, electric equipment, signaling and communications conductors and equipment, and raceways. This standard sets the requirements for Arc Flash Protection. Appendix D, Figure **D.3**, shows an example of an arc flash warning label.

6.1.4 Occupational Safety and Health Act (OSHA) (*29 CFR 1910 and 29 CFR 1926)*

OSHA (Public Law 91–596) covers conditions, practices, or operations to ensure safe and healthful workplaces.

6.1.5 NASA General Safety Program Requirements (*NPR 8715.3)*

This document is the central Agency document containing procedures and guidelines that define the NASA Safety Program.

6.1.6 Electric Power System Operating Instructions *(LVEPS–OI xx and HVEPS–OI xx)*

The GRC Low-Voltage Electrical Power System (LVEPS) and High-Voltage Electrical Power System (HVEPS) managers periodically issue numbered operating instructions applicable to their respective systems. Personnel responsible for design, operation, maintenance, construction, or repair of such systems shall be familiar with and follow these instructions (see Sections **5.4** and **6.10**). A list of these instructions can be found in Appendix **C**.

6.1 The SHeD verification procedure, to ensure compliance with the requirements listed in this section are adhered to, will be through a combination of review processes (HASPs, Safety Permits, design reviews, etc.) and/or worksite/building inspections.

6.2 Electrical Shock *(NFPA 70E)*

Employees exposed to shock hazards shall be trained, per NFPA 70E, in methods of release of victims from contact with exposed energized electrical conductors or circuit parts. Employees shall be regularly instructed (biennially) in methods of first aid and emergency procedures, such as approved methods of resuscitation (cardiopulmonary resuscitation (CPR), automated external defibrillator (AED), etc.).

Note:

Some persons who handle electrical equipment mistakenly believe that their tolerance to electric shock is related to their ability to withstand the pain of the shock. Actually, the lethal occurrence is a function of the amount and duration of current passing through the chest. Furthermore, a lethal current may only be marginally higher than one ranked just painful. It is current, not voltage, that causes physiological damage to humans. As the magnitude of the current increases, statistically the current is more dangerous as a cause of burns than as a cause of heart failure. Although resistance varies with many factors, the accepted value for the internal resistance of the human body is 100 ohms, and 500 ohms is used as a reasonable expectation for contact (touch) resistance. Several factors can impact contact resistance such as coarseness of the skin, area of contact, contact pressure, and degree of wetness of the surface. These factors can lower the overall resistance and allow increased current to flow.

TABLE 6.1—FROM NFPA "THE ELECTRICAL SAFETY PROGRAM" (TABLE 7.1)

Reaction of human body to electric current	Current in amperes (small body - large body)
Perception threshold (tingling sensation)	0.0007–0.0010
Slight shock—not painful (no loss of muscle control)	0.0012–0.0018
Shock—painful (no loss of muscle control)	0.0060–0.0090
Severe shock (muscle control loss & difficulty breathing)	0.0150–0.0230
Possible ventricular fibrillation (3-sec shock)	0.1000–0.1000
Possible ventricular fibrillation (1-sec shock)	0.2000–0.2000
Heart muscle activity ceases	0.5000–0.5000
Tissue and organs burn	1.5000–1.5000

Example: Utilizing Ohm's Law

(Hand contact + internal + foot contact = Total resistance)

500 ohms + 100 ohms + 500 ohms = 1100 ohms

120 volts/1100 ohms = <u>0.1091 amps</u>

This amperage, based on the table above, is of sufficient value to cause ventricular fibrillation, which could be fatal. Note that this is based on only 120 V, which we all use on a daily basis. Wet hands or breaks in the skin would decrease the resistance more and increase the current through the body.

6.2– The SHeD verification procedure, to ensure compliance with the requirements listed in this section are adhered to, shall be accomplished by reviewing SATERN records or other personnel training records, as required,

6.3 Medical/Physical Requirements *(NPR 8715.3, Section 7.4)*

Personnel who perform or control hazardous operations (working on or near energized equipment) shall be trained and certified with the necessary knowledge, skill, judgment, and physical ability (if specified in the job classification) to do the job safely (NPR 8715.3, Section 7.4, Requirement 25113).

Center SMA Directors, as stated in Section **5.0**, shall develop required safety certification programs for their Centers (NPR 8715.3 Section 7.4, Requirement 25106). Medical offices and cognizant health officials shall determine the need for physical and medical examinations including their depth, scope, and frequency to support certification requirements (see NPR 1800.1, Appendix **G**).

6.3– The SHeD verification procedure, to ensure compliance with the requirement listed in this section is adhered to, shall be accomplished by reviewing, when determined by NPR 1800.1, Appendix G, to be necessary, appropriate documentation (medical records).

6.4 Electrical Isolation *(NFPA 70E, Article 130)*

As a rule, GRC does not allow work on energized electrical systems. Exceptions are provided for specific tasks allowed in NFPA 70E, Article 130. A GRC System Manager and/or safety committee may concur with other exceptions to this policy after careful review of the situation and hazards involved. Such decisions shall be documented using an Energized Electrical Work Permit (see Appendix **B**). After permission is granted to work on energized equipment only tools designed and rated for the voltage level of the system voltage shall be used. Only devices designed for voltage testing and rated for the nominal voltage of the circuit under test shall be used to make voltage checks. Each test voltage indicator shall be verified before and after use by using the hot-dead-hot technique. Only qualified persons who have been trained to work safely with test instruments and equipment on energized circuits shall be permitted to perform such tests.

Whenever energized metal-enclosed electric supply apparatus (including high- or low-voltage, metal-enclosed switchgear, unit substations, panel boards, and switchboards that normally isolate the public from electrically energized components) are opened, special precautions shall be taken. Energized metal-enclosed electric supply apparatus shall not be opened without concurrence of the Electric Power Dispatcher at the GRC Lewis Field, or the Electrical Manager at the GRC Plum Brook Station. All requirements of NFPA 70E, Chapter 1 (Safety-Related Work Practices) 29 CFR 1910.269, and the NESC (IEEE C2) shall be followed.

For a low-voltage power apparatus, rated insulated barriers shall be placed over the exposed energized parts, warning sign(s) shall be placed, and flash protection and physical approach boundaries shall be established. If the qualified person who opened the electrical supply apparatus must leave the area, the opened facilities shall be closed and secured. For a high-voltage apparatus, flash protection and physical approach boundaries shall be established, suitable high-voltage warning signage shall be placed and a NASA GRC high-voltage Designated Safety Person (DSP) shall be in attendance (see Section **6.11**). No personnel shall be permitted to enter the work area without permission of the NASA GRC high-voltage DSP. The NASA GRC high-voltage DSP shall confirm that all personnel within the work area are aware of exposed electrically energized components. When the NASA GRC high-voltage DSP leaves the area, either a new GRC high-voltage DSP shall be designated and in attendance or the opened facilities shall be closed and secured (i.e., locked if possible).

To isolate a low-voltage electrical power apparatus, GRC requires a minimum of one electrical open. To isolate high-voltage apparatus, GRC requires two opens, when that cannot be achieved, one electrical open with grounds in place shall suffice. These grounds do not replace the need for working (safety) grounds being placed by the personnel performing the high-voltage tasks. When isolation or lockout/tagout causes a disruption in service an Area Clearance form (NASA **C–978**) is required (see Appendix **A** Definitions) prior to beginning work.

An Electrical Equipment Switching Order (when a written lockout/tagout plan is required) shall govern all scheduled switching, isolation, locking out, tagging out, or grounding of any part of the GRC electrical power systems. Particular effort shall be made to ensure that all potential power sources, including potential transformers (PTs), are disconnected to preclude back feed of power to the isolated site. An Electrical Equipment Switching Order shall govern the restoration of power to isolated systems or equipment. Such orders shall be prepared by the Electric Power Dispatcher at the GRC Lewis Field, or by the responsible engineer at Plum Brook Station. All switching procedures shall comply with the National Electrical Safety Code, ANSI C–2, Part 4.

Each switch person shall be a Qualified Operator (see Section **5.7** or Appendix **A**, Definitions) for the specific electrical power system and equipment involved, shall have a copy of the written switching procedure, and shall initial the written switching procedure attesting to completion of each step of the procedure as it is completed.

6.4– The SHeD verification procedure, to ensure compliance with the requirements listed in this section are adhered to, shall be accomplished by random inspections of work sites

6.5 Lockout/Tagout Procedures *(OSHA 29 CFR 1910.147and GLM–QS–1700.1Chapter 9)*

Lockout/tagout procedures shall be followed whenever work is being performed on a system or piece of equipment where operation of switches, valves, or similar devices could result in injury to personnel or damage to equipment. Refer to Glenn Safety Manual, Chapter **9** for details on Lockout/Tagout procedures.

An electrical "DANGER DO NOT OPERATE," NASA C–946a tag (Appendix C, Figure **D.4**), Stock Number 7530–01–LNO–1449, provides visual notice of work being performed on or near electrical power apparatus. The safety and welfare of work crews and protection of equipment depend on the diligent observance of these tags. Also shown in Figure **D.5** is a yellow caution tag. This tag does not have lockout/tagout authority; it is only used to show system status or give indication of the position the tagged device should be in.

6.5–The SHeD verification procedure, to ensure compliance with the requirements listed in this section are adhered to, shall be accomplished by random inspections of work sites

6.6 Consider All Electrical Systems Energized *(NFPA 70E, Article 120)*

All electrical systems and equipment shall be considered energized until verified to be de-energized and grounded (as required) prior to beginning hands-on work. Verification that an electrical apparatus is de-energized shall be made using a suitable voltage detector by using the hot-dead-hot technique. Subsequent verification may be made by observing the open position of isolating breakers, switches, and links in sectionalizing boxes, or by observing the personnel safety grounds installed at the worksite.

Where new work is incrementally energized during the checkout process or is energized at any time during the construction phase prior to placing the new system into service, temporary warning tags shall be placed on the energized new work.

A suitable tag to use is a "CAUTION DO NOT OPERATE," NASA C–946 tag (Appendix D, Figure **D.5**), Stock Number 7530–01–LNO–1281, stating in the remarks section why the tag is being placed. This tag merely indicates the status the system has been left in or system/equipment configuration.

FAILURE TO OBSERVE THE REQUIREMENTS OF THIS SECTION SHALL BE REASON FOR DISCIPLINARY ACTION.

6.6 – The SHeD verification procedure, to ensure compliance with the requirements listed in this section are adhered to, shall be accomplished by random inspections of work sites.

6.7 Buddy System *(GLM–QS–1700.1)*

The buddy system (see Chapter **22**, Glenn Safety Manual) states that a second person, familiar with the hazards and directly observing the operation, shall be applicable to all aspects of electrical work on or near unguarded electrical apparatus energized at 50 V or more, including field investigations to support design activities, and all construction, operation, and maintenance activities.

6.7– The SHeD verification procedure, to ensure compliance with the requirements listed in this section are adhered to, shall be accomplished by random inspections of work sites.

6.8 Work in a Confined Space (*29 CFR 1910.146, 29 CFR 1910.269, and* ***ANSI Z117.1***)

Many electrical systems are contained within areas identified as confined spaces. Entry into confined spaces is governed by procedures detailed in the Glenn Safety Manual, Chapter **16**. In addition, if high-voltage cables or equipment are contained within the space, the High-Voltage Electrical Power Systems Manager (see Section **5.4**) or Chair of the Electrical Applications Safety Committee (EASC) shall be notified. A Safety Permit Request (NASA **C–923**) may need to be submitted to the EASC if work is to be performed within major electrical power systems (e.g. Substations, 10X10 and 8X6 Drives, Central Air Equipment Building). Specific requirements for entering confined spaces containing high-voltage electric supply equipment or cables are described in HVEPS–OI–004.

6.8 – The SHeD verification procedure, to ensure compliance with the requirements listed in this section are adhered to, shall be accomplished by random inspections of work sites.

6.9 General Electrical Considerations *(LVEPS and HVEPS OIs)*

This section presents general GRC policies for work done on or near electrical power systems. The appropriate Systems Manager shall approve exceptions to these policies (see Section **5.4**).

6.9.1 Configuration Control

GRC has placed certain electrical power systems, including their control and protective systems, under configuration control as established by the provisions of GRC–P7010.002 “Configuration Management” procedure of the Facilities Division at Lewis Field and GRC–H–8810.2 “Facility Change Procedure” at Plum Brook Station. Systems under configuration control are

a. High-voltage electric power distribution systems (See Section **6.11**, Special High-voltage Electrical Safety Considerations)

b. Low-voltage electric power distributions systems

c. Variable Frequency Power System (Building 23)

d. Electrical power systems associated with major research facilities

6.9.2 Validation of Operating Equipment

New or repaired electrical equipment, where the repair involved the insulation system, and equipment that has not been energized for an extended period of time (3 months for outdoor /6 months for indoor equipment) shall be tested to ensure that the equipment dielectric strength is at a safe level before energizing. The appropriate Systems Manager (see Section **5.4**) should be consulted for specific testing requirements for a particular piece of equipment.

In general, power system equipment shall be tested using a direct current (dc) “megger” appropriate to the circuit voltage. Instructions provided by the megger manufacturer, including calculations to correct readings for temperature and humidity conditions, shall be followed in the use of the megger instrument.

Copies of all test reports shall be submitted to the appropriate power Systems Manager for review and concurrence. Energizing of new or repaired power system equipment requires approval of the Electrical Systems Manager. The Electrical Power Dispatch Office shall receive authorization from the appropriate Systems Manager prior to energizing new or repaired electrical equipment.

6.9.3 Separately Derived Electric Power Systems

Separately derived electric power systems whether derived from generators, transformers, converter windings, photovoltaics, or batteries, present unusual safety considerations. Design, installation, operation, and maintenance of such systems shall conform to the “National Electrical Code” (NFPA 70) and to the “Standard for Electrical Safety in the Workplace” (NFPA 70E). Designs for such systems shall be reviewed and approved by the appropriate GRC Electrical Systems Manager for systems to be installed at Lewis Field or by the Infrastructure System Manager (or his designee) for Plum Brook Station. The Systems Manager approving the installation of a separately derived system shall maintain a file that includes copies of the design documents and calculations reviewed, minutes of any meetings related to the review/approval process, and the approval memo, e-mail, or safety permit. This file shall be maintained for the life of the separately derived system. Changes to the separately derived system shall also be reviewed, approved, and documented.

6.9.4 Battery Systems

Design and installation of all stationary installations of storage batteries is governed by NEC Article 480. The nature of batteries is such that they cannot be shut off, therefore special care and handling is required to perform installation, maintenance, or testing. Exposed terminals, even on disconnected batteries, present an electrical shock hazard. Electrically connecting the two posts together on a battery, or the wrong posts on multiple batteries, can cause a high-current short circuit. These high current levels can cause serious burns, and perhaps cause the battery to rupture or explode, which may result in severe injury and possibly death. Some precautions to take while working with batteries are, but not limited to;

- Never touch both battery terminals with your bare hands at the same time
- Remove rings, watches and dangling jewelry when working with or near batteries.
- Only use insulated/non-conducting tools to remove cell caps.
- Never lay tools or other metal parts on top of a battery.
- Consider covering battery terminals and connectors if possible with an insulating blanket before overhead inspections or repairs
- Ensure charger is turned off before connecting or disconnecting a battery to prevent arcing

Vented batteries and battery cells, regardless of electrode type, contain dangerous electrolytes that are subject to spillage. Overcharging or rapid charging can cause boiling and spewing of electrolytes and production of explosive gases.

PPE for working with battery systems will be based on a job hazard analysis (JHA). A generic JHA for battery station maintenance can be viewed at http://smad-ext.grc.nasa.gov/glenn/programs/hazard_analysis/approved/jha6.pdf.

Typical precautions for battery work include

a. Face shields and safety glasses (goggles), butyl rubber gloves (or equivalent), and protective rubber aprons used whenever batteries or cells are being handled, filled, or charged

b. Safety shower and eye wash station located near each battery bank

c. Neutralizing kit available for electrolyte spills

d. Posting of appropriate and prominent signage. No smoking, open flames, or sparking devices in a battery area

e. Sufficient diffusion and ventilation of gases from the battery to prevent the accumulation of an explosive mixture to be assessed, designed, installed and maintained

f. Training in appropriate hazard communications

SHeD shall review and approve all new battery installations and modifications to existing battery plants that impact safety considerations. The package submitted for approval shall include a site layout, ventilation details including hydrogen generation and diffusion calculations, and a site-specific JHA.

If battery electrolyte should come into contact with skin or clothing, immediately treat it with water or a weak neutralizing solution. Electrolyte in the eyes, however, is a very dangerous situation; immediately flush the eyes with profuse amounts of water then seek medical attention.

Also refer to LVEPS–OI–008, “Work On or Near Low Voltage Electrical Systems” for other possible precautions and considerations.

6.9.5 Instrument Transformers

The following precautions shall be observed in handling instrument transformers.

a. Current transformer cases and secondaries shall be grounded. Where more than one set of current transformers are connected electrically, a ground point shall be selected that provides grounding for the network.

b. Secondaries of current transformers (CTs) shall never be opened while the primary circuit is energized. If current is passing through the primary of a CT, and the secondary circuit is not connected to the current coil, a very high and dangerous voltage will be present. The CT becomes a voltage step-up transformer

under this condition. Therefore, it is important to always short the X1 and X2 terminals to each other before breaking the circuit. Shorting bars or shorting terminal strips are permanently installed on most CTs or CT circuits for this purpose.

c. Always ensure potential transformers (PTs) fuse are removed from circuits to be worked on.

d. The case and one wire of the low-voltage side of potential transformers shall always be grounded before energizing the transformer.

6.9.6 Capacitors

Design and installation of all capacitors, except surge capacitors or capacitors furnished as a component part of other apparatus are governed by NEC Article 460. Before employees work on capacitors, the capacitors shall be disconnected from the energizing source, residual charge shall be bled off through a suitable current limiting resister, and the capacitor(s) shall be grounded. Capacitors shall be isolated and the absence of the stored voltage verified utilizing proper PPE as required in NFPA 70E Article 120. Since capacitor units may be connected in series-parallel configurations, after residual charge is bled off, each unit shall be shorted between all insulated terminals and the capacitor tank before handling. Racks for capacitors shall be grounded. Any internal resistor shall not be depended upon to discharge capacitors. Also, see Section **6.13** for special requirements for high-voltage capacitor banks used as part of experimental equipment.

6.9 – The SHeD verification procedure, to ensure compliance with the requirements listed in this section are adhered to, shall be accomplished by random inspections of work sites. Copies of the approved waivers, deviations or exceptions to these policies shall be provided to SHED upon request.

6.10 Hazardous (Classified) Locations *(NFPA 70, Articles 500 through 516)*

Many facilities and test rigs employing or storing flammable gases or vapors, flammable liquids, combustible dust, or ignitable fibers or flyings exist at the GRC Lewis Field and Plum Brook Station. These areas are classified as hazardous locations and shall obtain formal approval of area classification(s) from SHED before becoming operational. Guidance for classifying areas is contained in various NFPA publications. Requirements for electrical and electronic equipment and wiring for all voltages in such classified locations is covered in the NEC, NFPA 70 Articles 500 through 516.

NEC paragraph 500.5(A) FPN reminds us that “Through the exercise of ingenuity in the layout of electrical installations for hazardous (classified) locations, it is frequently possible to locate much of the equipment in a reduced level of classification or in an unclassified location and, thus, to reduce the amount of special equipment required.” Responsible personnel shall involve SHED early in evaluations of use of hazardous materials and the need for classified electrical equipment during design and prior to the installation/operation of such equipment.

All hazardous (classified) locations shall have suitable and prominent warning signs clearly posted to identify that the area is a classified location, what the area classification is, and the organization responsible for the area. Signs shall be framed and securely mounted. Signs shall be 8.5 by 11 in. or larger.

See Appendix D, Figure **D.1** for an example of a hazardous (classified) area warning sign for a simple, single-classification area. More complex situations may require posting additional information, such as a framed sketch depicting multiple classifications within the area, along with the warning sign.

No construction or change to operating procedures shall be allowed within a hazardous (classified) area without a review conducted by the Area Safety Committee that documents the rationale leading to approval of the construction or change to operating procedures.

The organizational element responsible for a hazardous (classified) area shall maintain a file relating to the area. Such files shall contain the document(s) identifying area classifications and the SHED approval. Supporting documents such as calculations, preliminary and final hazard analyses, and related meeting minutes shall be included in the file.

6.10 - The SHeD verification procedure, to ensure compliance with the requirements listed in this section are adhered to, will be through a combination of review processes (HASPs, Safety Permits, design reviews, etc.) and/or worksite/building inspections.

6.11 Special High-Voltage Electrical Safety Considerations *(HVEPS–OIs)*

6.11.1 High-Voltage Electrical Power System Operating Instructions *(HVEPS–OIs)*

These instructions are authored by the High-Voltage Electrical Power Systems Manager and are the basis for much of the information found in this section. They are considered part of the Glenn Safety Manual (see Section **6.1**) and as such must be adhered to when working on or near high-voltage systems and equipment.

6.11.2 Connections to High-Voltage Supply

All connections or modifications to high-voltage electrical power systems require special considerations. The EASC reviews and permits all such changes. High-voltage electric power distribution systems are under configuration control, and change control procedures established by the FD apply to all modifications and additions to the systems. In addition, major facilities incorporating high-voltage systems and equipment are under configuration control by the responsible operating organizations. Each of these organizations has unique configuration control requirements covering changes to their controlled systems. At Plum Brook Station, the Plum Brook Management Office maintains configuration control. In general, prior to additions or modifications to such systems, formal engineering documentation, appropriate safety review, and final approval by the organization with configuration control responsibility are required.

6.11.3 NASA GRC High-Voltage Designated Safety Person (DSP)

At GRC Lewis Field, the NASA GRC high-voltage DSP who monitors and controls entry into electric supply stations, power manholes, cable tunnels or rooms, and transformer vaults is assigned by the high-voltage maintenance contractor from the list of Qualified Operators approved by the Contracting Officer's Technical Representative (COTR) or Alternate COTR. The list of Qualified Operators is incorporated into the approved GRC Electrical Applications Safety Permit for operation of the high-voltage system. For other areas containing high-voltage equipment at GRC Lewis Field, the NASA GRC high-voltage DSP is appointed by the operations contractor or test supervisor for that area, and as incorporated into the approved GRC Safety Permit for operation of the high-voltage system (i.e., Building 23 Variable Frequency Power System).

At the GRC Plum Brook Station, the NASA GRC high-voltage DSP is appointed by the Technical Services Group supervisor. The specific duties and requirements for the NASA GRC high-voltage DSP in the high-voltage electrical power systems are described in HVEPS–OI–012.

> A DSP MUST BE PRESENT BEFORE ANY ACCESS COVERS, HATCHES, OR DOORS TO HIGH-VOLTAGE AREAS OR EQUIPMENT ARE OPENED OR REMOVED.

It is the responsibility of project management and supervisory personnel to ensure this requirement is adhered to. Failure to meet this requirement will result in a work stoppage and possible barring of re-entry.

6.11.4 Entry Into Electric Supply Stations

Entry into electric supply stations by other than the authorized maintenance personnel (as posted on signs at each entry, see Appendix D, Figure **D.2**) requires the presence of a GRC high-voltage DSP. Such entries shall be coordinated through the Electric Power Dispatcher at Lewis Field and through the Plum Brook Management Office at Plum Brook Station. The NASA GRC high-voltage DSP shall notify the Electric Power Dispatcher upon entering and leaving the station. Such notification shall include the purpose of the activity.

> ALL UNAUTHORIZED ENTRIES INTO ELECTRIC SUPPLY STATIONS, REGARDLESS OF WHETHER THE STATION IS ATTENDED, UNATTENDED, LOCKED, OR UNLOCKED, SHALL BE REASON FOR DISCIPLINARY ACTION.

6.11.5 Work On or Near High-Voltage Facilities

6.11.5.1 On High-Voltage Facilities

The general requirement for working on high-voltage electric supply equipment or lines shall be to provide two open breaks in series on all electrical phases between the work site and each energy source, including back feeds, and one open break between the work site and potential transformers. Visible protective safety grounds shall be provided either on both sides of the work site or at the work site.

This general requirement, called two opens, shall be the Center's objective and shall be met in the majority of Electrical Equipment Switching Orders to isolate high-voltage electric supply equipment or lines. The Electrical Power Dispatcher shall approve exceptions to this general requirement.

When more than one work site exists on isolated high-voltage electric supply equipment or lines, such as along overhead 7200- or 34 500-V distribution lines, visible protective safety grounds shall be provided at both ends of the distribution line and at each work site.

6.11.5.2 Near High-Voltage Facilities

When work is performed near high-voltage electric supply equipment or lines utilizing air-insulated configurations, such high-voltage supply equipment or lines shall be isolated and grounded or the high-voltage facilities shall have suitable guards installed which preclude encroachment into minimum safe working clearances from the energized facilities.

When work is performed near insulated high-voltage electrical cables and associated cable apparatus, cables and associated cable apparatus are not required to be de-energized. For such cases when cables or cable apparatus are requested to be de-energized, only one electrical break is required. Utilization of protective safety grounds is optional.

> ***Note:*** *Specific electrical isolation and grounding requirements for the high-voltage power systems are presented in HVEPS–OI–011, "Work On or Near High-Voltage Electrical Systems." Minimum safe working distances from air-insulated high-voltage apparatus are shown in HVEPS–OI–012.*

6.11.6 Work in Electric Supply Stations or Near Exposed Lines or Apparatus

For all work within energized high-voltage electric supply stations or in the vicinity of exposed energized high-voltage lines or apparatus:

a. Each contractor shall abide by all applicable OSHA, NEC, NESC, and GRC safety rules and regulations. GRC Safety Documents that exist and receive authorization through the Glenn Safety Manual are incorporated into the contractor's contract by reference, and as such, have the same force and effect as if they were given in full text. The full text of the GRC safety documents shall be provided to the contractor upon the contractor's request of the Contracting Officer.

b. Each contractor shall appoint an individual (employee in charge) to be responsible for the electrical safety of each of the contractor work teams. Before starting the work, the contractor shall provide a document to the Government establishing that the employee in charge is qualified and knowledgeable in all required safety regulations. This individual shall verify that each work area, and a safe zone beyond the work area, has been de-energized and made safe (properly isolated and grounded) before permitting a team to work in the energized electric supply station.

   Note: *This requirement is not to be confused with the NASA GRC high-voltage DSP.*

c. Each contractor shall abide by all barriers and rope guards, placed by the GRC DSP, to clearly define the safe work zone and to prevent the workers from inadvertently moving out of the safe work area. Work area separation from exposed energized lines and apparatus is established in HVEPS–OI–012.

6.11.7 High-Voltage Switching

Only personnel who are listed on an approved Qualified Operator's List (NASA **C–580**) as qualified for the specific circuits or equipment shall perform high-voltage switching.

The following precautions must be observed:

Disconnecting poles (hot sticks) and rubber gloves shall be used when operating high-voltage, hook-stick-operated disconnecting switches having open circuit voltages. The following table lists the minimum pole length for various voltages:

TABLE 6.2.—MINIMUM HOT STICK LENGTHS (ft)

Voltage	Minimum length of hot stick,
601 to 7500	4
7501 to 50 000	8
50 001 to 73 000	12
73 001 to 138 000	16

a. Rubber gloves with leather protectors shall be worn when operating any manually operated, mechanically connected, remotely controlled air break switch where the voltage exceeds 600 V.

b. No work shall be done on circuits or equipment isolated from power sources by oil switches alone.

c. A switch person operating any switch used for maintenance or for isolation of circuits above 600 V shall be accompanied by a NASA GRC high-voltage DSP who shall stand at a safe distance and be prepared to take any necessary steps in event of an emergency.

6.11.8 Cutting High-Voltage Cables

Cutting high-voltage cables when neither end of the cable is visible from the location of the cut presents unique safety considerations. The procedure to identify and cut high-voltage electric cables is governed by HVEPS–OI–009.

6.11.9 Fuses (Removal and/or Replacement)

Removal/Replacement of fuses may be accomplished once the fuse is disconnected from all sources of electrical energy. Removal/replacement of fuses from an energized circuit shall require an Energized Electrical Work Permit (NASA form C-780). Fuses shall not be removed on energized circuits above 34. 5kV. **Fuses are not to be replaced under load**.

When removing or replacing fuses on unloaded energized circuits insulated fuse extractors and NFPA 70E Hazard/Risk Categories (HRC) with the associated required PPE shall be used:

a. On circuits rated 50 to 240 V, HRC 1.

b. On circuits rated 241to 600V, HRC 2

c. On circuits rated 601V to 34 500 V (34.5 kV), HRC 4

Exception; *an Energized Electrical Work Permit will not be required for Control power, Instrumentation and Potential Transformer (PT) secondary fuses being removed or replaced, with the circuit energized, as long as the transformer they are connected to is rated less than 240V and 125 kVA or smaller.*

6.11.10 Lifting and Construction Equipment, Vehicles, or Personnel Near Exposed Energized Electrical Parts

- Personnel working near and/or using hoisting, lifting, or other construction equipment or vehicles near air-insulated energized electrical lines or exposed terminals of electrical apparatus are subject to the minimum safe working distances established in HVEPS–OI–012.
- Construction equipment shall be separated far enough from such lines and apparatus so that equipment failure would not result in the construction equipment approaching energized electrical facilities closer than the established minimum safe work distance.
- All equipment shall be effectively grounded (to ensure proper fault protection) when being moved or operated in close proximity to energized lines or electrical apparatus. Consideration shall be given to grounding the load, particularly if insulated lifting straps are in use. All such operations shall have a dedicated observer (without any other duties) to warn equipment operators of potentially hazardous situations and/or movements.

6.11 – The SHeD verification procedure, to ensure compliance with the requirements listed in this section are adhered to, shall be accomplished by random inspections of work sites. Copies of the approved waivers, deviations or exceptions to these policies shall be provided to SHeD upon request.

6.12 Personal Protective Equipment (for additional information on PPE see GSM Chapter 15)

6.12.1 Hard Hats *(29 CFR 1910.135 and ANSI Z89.1)*

All personnel entering high-voltage electric supply stations, power manholes, electrical cable tunnels, electrical cable rooms, or vaults shall wear a Type I, Class E hard hat conforming to 29 CFR 1910.135 and ANSI Z89.1.

6.12.2 Eye Protection *(ANSI Z87.1 and ASTM F 2178)*

Safety glasses, goggles, or face shields shall be worn by an individual in any area or during any work where there is a reasonable probability of eye injury. Eye and face protection shall meet or exceed ANSI Z87.1 Standard "Occupational and Educational Eye and Face Protection Practice" and ASTM F 2178 "Standard Test Method for Determining the Arc Rating and Standard Specification for Eye or Face Protective Products".

6.12.3 Safety Shoes *(ASTM F2412 and F2413)*

All personnel who regularly enter high-voltage electrical supply stations, power manholes, cable tunnels, etc., shall wear safety shoes meeting the requirements of ASTM F2412 and F2413.

6.12.4 Rubber Insulating Gloves *(ASTM D 120 and ASTM F 496)*

Rubber gloves used for protection against electrical shock shall meet the requirements of ASTM D 120, "Standard Specification for Rubber Insulating Gloves" and be tested in accordance with American Society for Testing and Materials (ASTM) F 496, "Standard Specification for Rubber Insulating Gloves in Service Care." In addition, ASTM F 1236, "Standard Guide for Visual Inspection of Electrical Protective Rubber Products" provides suggested methods of pre-use inspections to ensure glove integrity.

All qualified switch persons shall have two pairs of personal rubber insulating gloves, protective leather gloves, and a glove bag. Protective leather gloves shall always be worn over lineman-type rubber gloves and will be in accordance with ASTM F 696, "Standard Specification for Leather Protectors for Rubber Insulating Gloves."

Preferable glove construction shall be in contrasting two-color combinations. The contrast between the thin outer color against the inner color makes inspecting for cuts and tears easier when the glove is inflated or stretched. Whenever the inner rubber color is visible, the pair of gloves shall be discarded.

6.12.5 Hot Sticks *(ANSI/IEEE Standard 516 and* 29 CFR 1910.269(j)*)*

All hot sticks used at GRC Lewis Field and Plum Brook Station shall be made of fiberglass and shall meet the requirements of 29 CFR 1910.269(j). Field care, handling, and storage shall be per ANSI/IEEE Standard 516, Section 4.

6.12.6 Protective Clothing *(NFPA 70E)*

Personnel shall wear protective clothing as required by NFPA 70E, Table 130.7(C)(10), when performing energized work, whether or not an Energized Electrical Work Permit (NASA C-780) is required. Table 130.7(C)(10) lists the requirements for protective clothing and other protective equipment based on Hazard/Risk Category numbers 0 through 4. This clothing and equipment shall be used when working within the Arc Flash Protection Boundary.

Table 130.7(C)(11) lists examples of protective clothing systems and typical characteristics, including the degree of protection, for various clothing. The protective clothing selected for the corresponding Hazard/Risk Category number determined from Table 130.7(C)(9) (including associated notes) and the requirements of 130.7(C)(10) shall have an arc rating of at least the value listed in the last column of Table 130.7(C)(11). Flame Resistant (FR) clothing that has an arc rating based on testing defined by ASTM F 1506, "Standard Performance Specification for Flame Resistant Textile Materials for Wearing Apparel for Use by Electrical Workers Exposed to Momentary Electric Arc and Related Thermal Hazards", and ASTM F 1959, "Standard Test Method for Determining the Arc Thermal Performance Value of Materials for Clothing", adheres to these requirements.

6.12 – The SHeD verification procedure, to ensure compliance with the requirements listed in this section are adhered to, shall be accomplished by random inspections of work sites.

6.13 Equipment Safety Tests and Checks *(ANSI/IEEE or NETA)*

6.13.1 Tests To Be Performed Prior to Initial Energization

a. Initial energization of all new electrical equipment shall be done only in the presence of the appropriate Government representative. Before the initial energization, feeder circuit breakers shall be checked for proper adjustments in accordance with the manufacturer's instructions. (Molded-case circuit breakers without solid-state trip devices are excluded from this requirement.)

b. All protective relays and other such devices shall be tested to be sure that they can operate in the range required. Where possible, tests shall include loading in at the current transformer secondaries to validate the circuitry as well as the device.

c. All wiring shall be checked for conformity to the design and to functional requirements.

d. All motors, cables, and switchgear shall be tested in accordance with industry standards and manufacturer's recommendations, at voltage levels approved by the appropriate Systems Manager for the specific type of equipment. The following industry standards shall apply:

TABLE 6.3.—TESTING STANDARDS

Equipment	Standard[a]
Motors	ANSI/IEEE or ANSI/NETA[b]
Cables	AEIC or ANSI/NETA
Paper-insulated	AEIC or ANSI/NETA
Rubber, ethylene, propylene rubber, cross-linked polyethylene-insulated	ICEA or ANSI/NETA
Switches	ANSI/IEEE or ANSI/NETA
Transformers	ANSI/IEEE or ANSI/NETA

[a]See appropriate Systems Manager to determine preferred standards and methods

[b]InterNational Electrical Testing Association

6.13.2 Circuit-Interrupting Devices

All circuit-interrupting devices shall be rated to interrupt the maximum short-circuit current that can be supplied by the power system at the point of application of the device.

Whenever a proposal is made to add circuit-interrupting devices to the system and whenever large loads are added or major system changes are made, the responsible engineering organization shall make system short-circuit studies to establish the circuit-interrupting duty requirements. All such studies shall be reviewed and approved by the responsible electrical Systems Manager.

After any operation in which a circuit breaker opens under short circuit or fault conditions, the circuit breaker shall be inspected and checked immediately to ensure suitability for reuse.

All inspections and checks shall be performed following GRC lockout/tagout procedures and guidance contained in high-voltage and low-voltage Electrical Power System Operating Instructions. Work on high-voltage devices shall follow directions from the Electric Power Dispatcher and/or Systems Manager. Inspections and checks of molded case circuit breakers shall be limited to visual inspection and a contact resistance (micro ohm) test of each pole with maximum acceptable resistance levels as established by the device manufacturer. Inspections and checks of all other circuit breakers, both low- and high-voltage, shall consist of (a) visual inspection of the main contacts where the insulating medium will not be compromised by the inspection, (b) an insulation (megger) test, and (c) a contact resistance (micro ohm) test. Acceptable insulation test values shall be a minimum of 1 megohm or 1 megohm per 1000 V of operating voltage, whichever is greater. Acceptable test values of contact resistance shall be as established by the device manufacturer.

If the above inspection and checks are complete and the circuit breaker appears to be within normal operating parameters, prove functionality by cycling the breaker in the test or isolated position.

If the breaker fails any of the above inspections or checks, it shall not be put back into operation. When a trip occurs on breakers above 600 V, the troubleshooting process shall verify the settings of all breakers between the fault and the breaker that tripped. (Molded-case circuit breakers without solid-state trip devices are excluded from the requirement to verify trip settings.)

To ensure satisfactory mechanical operation, all circuit breakers rated 34.5 kV and above shall be operated at least once every 18 months, with the exception of those installed for 15 years or more, which shall be operated annually.

6.13.3 Protective System Checks

Protective relay settings shall be coordinated to provide selective tripping. The appropriate Electrical Systems Manager shall maintain a listing of the required settings and the frequency of periodic testing of all protective relays in use. All HVEPS protective relays at GRC Lewis Field and Plum Brook Station shall be checked and calibrated on a triennial basis. Every reasonable effort shall be made to perform an end-to-end test of the relay circuitry in the process of this check, including verification of the integrity of grounds, grounding cables, grounding resistors, and grounding transformers.

6.13.4 High-Voltage Insulation Testing

High-voltage test levels and procedures for all operating equipment shall be verified with the HVEPS Manager to ensure that the test voltage selected and/or procedure used is based on evaluations of the type and condition of insulation, age, damage, equipment history, and desired service, as recommended in ANSI/IEEE 95 (Insulation Testing of Large AC Rotating Machinery with High Direct Voltage) or in NETA MTS (Maintenance Testing Specifications).

High-voltage dielectric testing shall be performed in the presence of a NASA-designated GRC high-voltage safety person. Isolation, tagging, area securing, and grounding procedures as required shall precede testing. During testing, all safety precautions listed in the respective standard/specification shall be followed.

6.13 – The SHeD verification procedure, to ensure compliance with the requirements listed in this section are adhered to, shall be accomplished by random inspections of work sites test data.

6.14 Experimental Equipment *(GLM–QS–1700.1)*

6.14.1 Safety Responsibility

Experimental electrical or electromechanical equipment that is under development, and therefore subject to frequent modifications, can present a particular hazard to personnel. The operating and emergency procedures and attendant hazards may change from day to day. The project manager is responsible for the safety of personnel and equipment associated with the development of experimental apparatus. A responsible member of the team shall perform and document periodic assessment of project/equipment hazards using, as a minimum, a Safety Permit Hazard Analysis form, NASA **C–923a**.

The frequency of these assessments will be determined by the initial Safety Committee Review and listed as a requirement on the safety permit.

These assessments shall be used to establish correct working procedures, to identify need and to implement use of appropriate PPE, and to establish proper emergency procedures. Particular emphasis shall be placed on de-energization of the equipment.

6.14.2 Experimental, Developmental, or Flight-Level Electrical/Electronic Equipment

Following are additional guidelines for working on or near energized electrical experimental, developmental, or flight-level electrical/electronic equipment:

a. A responsible member of the research and development team such as the Project Engineer shall establish correct working procedures as well as proper precautions, warnings, emergency procedures, and some approved operators list. Safety should be a recurring topic of discussion during project team meetings. Emphasis should be placed on establishing and familiarizing project personnel with emergency procedures to de-energize the equipment. New project personnel shall be apprised of unusual shock hazards associated with the equipment.

b. Electric shock can be experienced under certain conditions when working with voltages as low as 15 V rms (effective voltage). The level at which exposed energized parts become dangerous is considered much lower for wet conditions, wet contact, or for personnel with physical limitations such as an installed heart pacemaker. High leakage current (>0.5 milliamps) could be indicative of an unsafe condition or shock hazard. Use of ground fault interrupting circuitry is encouraged.

c. As a minimum, guards shall be provided around exposed connections energized above 50 V rms per the NEC.

d. Personnel shall not work alone on energized electrical equipment with dangerous voltage levels, 50 V or more to ground (see Section **6.7** and Glenn Safety Manual, Chapter **22**).

e. After deenergizing, a required minimum discharge time should be observed and/or grounding probe(s) should be utilized to discharge circuits prior to physical contact or circuit modifications to ensure that no residual or hazardous voltages remain.

f. Where reasonable and possible, fail safe and/or current limiting circuits should be incorporated in equipment to minimize effects of personnel exposure to hazardous electric shock energy.

g. Temporary wiring utilized shall (1) be rated for the environment and use, (2) be routed in a reasonably neat manner, and (3) not pose unreasonable additional hazards and (4) meet the requirements of the NEC unless justified in writing by the AHJ.

h. Periodic hazard assessment of project/equipment hazards and identification of appropriate PPE shall be conducted. Faulty equipment, frayed cords, or faulty grounding conditions shall be repaired or eliminated.

i. Conductive articles of jewelry and clothing such as watch bands, bracelets, rings, key chains, necklaces, metalized aprons, cloth with conductive thread, or metal headgear shall not be worn where they present an electrical contact hazard with exposed energized parts unless such articles are rendered nonconductive by covering, wrapping, or other insulating means.

j. Equipment with power circuits that utilize instrument/metering type current or potential transformers, or large capacitive or inductive elements could be extremely dangerous. These electrical apparatus pose a unique set of shock hazards and should be worked with in an energized circuit only after careful considerations of consequences such as resonances or extreme currents or voltages.

6.14.3 Experimental Equipment Utilizing High-Voltage Capacitor Banks

Test personnel conducting experiments in which capacitor banks with voltages above 600 V are employed shall have total knowledge of the experiment, the circuit, and the component layout. Personnel shall be fully trained in the operating and safety procedures to be used at that facility, including procedures to be used in the event of equipment failure. These personnel should be listed on a Qualified Operators List (NASA **C–580**). General guidance for use of capacitors on power circuits is contained in NEC Article 460 and paragraph 8.8.16. Additional precautions and procedures are as follows:

a. Each high-voltage test area shall be enclosed and protected by using gates and interlocks on the test controls. Since capacitors and related high-voltage component faults are a source of hazardous shrapnel, these components shall be isolated in a manner that precludes personnel injury or facility-related hazards such as fire.

b. High-voltage warning signs shall be displayed in conspicuous locations. Flashing warning lights shall be used to indicate that tests are in progress.

c. Shorting switches and grounding devices that normally discharge the capacitor bank shall be clearly visible to the test operator. These devices shall be fail-safe and shall function to a safe configuration with no electrical power.

d. A voltmeter connected across the capacitor bank shall be clearly visible to the test operator at all times. A redundant voltmeter shall be installed at the capacitor bank.

e. Prior to touching a high-voltage component within the test area, personnel shall determine, by using a grounding wand approved by the safety manager for the particular installation, that the capacitor bank is fully discharged to a building ground.

f. Extreme caution shall be used on capacitor banks that are operated by dc voltages, since a dc capacitor bank will maintain a residual voltage for extended periods.

g. Capacitors that are connected in series/parallel to form a bank shall be treated with great care, and each capacitor terminal in a series/parallel string shall be properly shorted to ground prior to making any changes to a test bank or circuit.

6.14 - The SHeD verification procedure, to ensure compliance with the requirements listed in this section are adhered to, will be through a combination of review processes (HASPs, Safety Permits, design reviews, etc.) and/or worksite/building inspections.

6.15 Training (NASA General Safety Program Requirements NPR 8715.3C)

6.15.1 Initial Training

GRC, through SHeD, shall develop and provide training to ensure that the purpose and function of the Electrical System Safety program are understood by its employees per NPR 8715.3C, Chapter 3, Section 3.6.1(d). Classroom

training and testing shall be utilized to verify that the knowledge and skills required for the safe application, and usage of both onsite and national requirements are adhered to when working on electrical systems at GRC. The training shall be coordinated by the Human Capital Development Branch, and records shall be maintained in SATERN. The training shall include the following:

- Certified (Qualified) Low Voltage Switchperson/Operator
  - Requirements of GSM Chapter **8**, Electrical System Safety, and Chapter **9**, Lockout/Tagout.
  - Awareness on the requirements of NFPA 70E, Standard for Electrical Safety in the Workplace.
  - Requirements of the low-voltage electrical power systems operating instructions (LVEPS–OIs).
- Unqualified Employees (trades personnel, engineers, etc. that are exposed to electrical circuits operating at 50 volts or more to ground)
  - On-line COURSE SMA-OS-EXTW-340 (4Hr) or equivalent
- Unqualified Employees such as office employees
  - On-line COURSE SSC-001-09 (1hr) or equivalent

A passing test score shall provide the certification requirement needed to perform switching and operating low-voltage equipment at the GRC Lewis Field and Plum Brook Station.

- Employees exposed to shock hazards shall be trained in:
  - Methods of release of victims from contact with exposed energized electrical conductors or circuit parts.
  - Methods of first aid and emergency procedures, such as approved methods of resuscitation, if their duties warrant such training. Training of employees in approved methods of resuscitation, including cardiopulmonary resuscitation, shall be certified by the employer annually

6.15.2 Employee Retraining

Retraining shall be accomplished, at a minimum, every 3 years. Retraining shall also be provided for all certified employees whenever the employer has reason to believe that there are deviations from or inadequacies in the employee's knowledge or use of the requirements set forth in GSM Chapter 8.

The retraining shall reestablish employee proficiency and introduce new or revised requirements (GSM, OIs, NFPA 70E, etc.) as necessary. If revised requirements or procedures are not being introduced, proficiency can be reestablished by retesting only.

The employer shall certify that employee training has been accomplished and is being kept up to date. The certification shall contain each employee’s name and dates of training.

6.15 – The SHeD verification procedure, to ensure compliance with the requirements listed in this section are adhered to, shall be accomplished by reviewing SATERN records or other personnel training records, as required,

7.0 RECORDS

- Energized Electrical Work Permit C-780, maintained on file by the Safety and Health Division (SHeD).

8.0 REFERENCES

Document Number	Document Name
29 CFR 1910 and 1926	Public Law 91–596, Occupational Safety and Health Act (OSHA), 1970
ANSI/IEEE C2	American National Standards Institute. National Electrical Safety Code
ANSI/IEEE 95–2002	Insulation Testing of Large AC Rotating Machinery with High Direct Voltage
ANSI/IEEE 516	IEEE Guide for Maintenance Methods on Energized Power Lines
ANSI Z87.1	Practice for Occupational and Educational Eye and Face Protection

ANSI Z89.1	Requirements for Protective Headwear for Industrial Workers
ASTM D 120	Standard Specification for Rubber Insulating Gloves
ASTM F496	Standard Specification for Rubber Insulating Gloves in Service Care
ASTM F696	Standard Specification for Leather Protectors for Rubber Insulating Gloves
ASTM F 1236	Standard Guide for Visual Inspection of Electrical Protective Rubber Products
ASTM F 1506	Standard Performance Specification for Flame Resistant Textile Materials for Wearing Apparel for Use by Electrical Workers Exposed to Momentary Electric Arc and Related Thermal Hazards
ASTM F 2178	Standard Test Method for Determining the Arc Rating and Standard Specification for Eye or Face Protective Products
ASTM F 2412	Standard Test Methods for Foot Protection
ASTM F 2413	Standard Specification for Performance Requirements for Foot Protection
ASTM F1959	Standard Test Method for Determining the Arc Thermal Performance Value of Materials for Clothing
ANSI/NETA ATS	Standard for Acceptance Testing Specifications for Electrical Power Equipment and Systems
ANSI/NETA MTS	Standard for Maintenance Testing Specifications for Electrical Power Distribution Equipment and Systems
HVEPS–OI–xx	High-voltage Electric Power System Operating Instructions. Various dates
LVEPS–OI–xx	Low-voltage Electrical Power System Operating Instructions. Various dates
GLM–QS–1700.1	NASA Glenn Safety Manual, BMS Document
NPR 8715.3C, Chapter 3.6	NASA General Safety Program Requirements Chapter 3.6
GRC–P7010.002	Configuration Management (Lewis Field)
GRC–H-8810.2	Facility Change Procedure (Plum Brook Station)
NFPA 70	National Electrical Code
NFPA 70E	Standard for Electrical Safety in the Workplace
NFPA Item # 320-3760-03	The Electrical Safety Program Book

APPENDIX A.—DEFINITIONS AND ACRONYMS

Following are some key definitions related to electrical safety. Many additional related definitions are contained within referenced documents such as the National Electrical Code (NEC) and the National Electrical Safety Code (NESC).

Arc Flash (Flash Hazard).—A dangerous condition associated with the release of energy caused by an electric arc.

Area Clearance Process.—Documented way of communicating a disruption in service.
https://knowledgeshare.grc.nasa.gov/eRoomReq/Files/NASAc1f1/GRCKnowledgeBase/0_1c365/GLP-QS-1100_2_Area_Clearance.pdf

American Society of Testing and Materials (ASTM)

American National Standards Institute (ANSI)

Association of Edison Illuminating Companies (AEIC)

Authority Having Jurisdiction (AHJ) – The organization, office, or individual responsible for enforcing the requirements of a code or standard, or for approving equipment, materials, an installation, or a procedure.

Automated External Defibrillator (AED).—this is a portable electronic device that automatically diagnoses the potentially life-threatening cardiac arrhythmias of ventricular defibrillation and ventricular tachycardia in a patient and is able to treat them through defibrillation.

Cardiopulmonary Resuscitation (CPR).—an emergency procedure in which the heart and lungs are made to work by manually compressing the chest overlying the heart and forcing air into the lungs. CPR is used to maintain circulation when the heart stops pumping.

Designated safety person (DSP)

Electrical Applications Safety Committee (EASC)

Electrically Safe Work Condition.—A state in which the conductor or circuit to be worked on or near has been disconnected from energized parts, locked/tagged in accordance with established standards, tested to ensure absence of voltage, and grounded if deemed necessary.

Electric Supply Equipment.—Equipment that produces, modifies, regulates, controls, or safeguards a supply of electric energy.

Electric Supply Station.—Any building, room, or separate space within which electric supply equipment is located and the interior of which is accessible, as a rule, only to qualified persons. This includes substation, transformer, storage battery and switchgear rooms or enclosures, but does not include facilities such as pad-mounted equipment and installations in manholes and vaults.

Enclosure.—The case or housing of apparatus, or the fence or walls surrounding an installation to prevent personnel from accidentally contacting energized parts or to protect the equipment from physical damage.

Facilities Division (FD)

Fine Print Note (FPN).—Are not requirements and are for information purposes only.

Glenn Safety Manual (GSM)

Glenn Research Center (GRC)

Guarded.—Covered, shielded, fenced, enclosed, or otherwise protected by means of suitable covers, casings, barriers, rails, screens, mats, or platforms to remove the likelihood of approach or contact by persons or objects to a point of danger.

High-voltage electrical power system operating instructions (HVEPS–OI)

International Electrical Testing Association (NETA)

Insulated Cable Engineers Association (ICEA)

Institute of Electrical and Electronics Engineers (IEEE)

Job Hazard Analysis (JHA)

Lockout/Tagout.—Method of controlling hazardous energy sources.

Low-Voltage Electrical Power System Operating Instruction (LVEPS-OI)

Maintenance Testing Specification (MTS)

National Aerospace and Space Administration (NASA)

National Electrical Code (NEC)

National Electric Safety Code (NESC)

National Fire Protection Association (NFPA)

NASA Procedural Requirements (NPR)

Occupational Safety and Health Administration (OSHA)

Personal Protective Equipment (PPE).—Equipment designed to protect employees from serious workplace injuries or illnesses resulting from contact with chemical, radiological, physical, electrical, mechanical, or other workplace hazards.

Potential Transformer (PT).—A potential transformer is a special type of transformer that allows meters to take readings from electrical service connections with higher voltage (potential) than the meter is normally capable of handling without at potential transformer.

Qualified Operator (Switch person).—A person that has (1) Received site-specific knowledge of both the equipment being operated and the system(s) it may impact. (2) Been trained on the maintenance and safe operation of particular equipment including, specific voltages, and the proper PPE. (3) Received instruction on lockout and/or tagout through the GRC Lockout/Tagout Program.

Qualified Person.—One who has skills and knowledge related to the construction and operation of the electrical equipment and installations and has received safety training on the hazards involved. See NFPA 70E, Standard for Electrical Safety in the Workplace, Article 110.6.

Safety and Health Division (SHeD)

Shock Hazard.—A dangerous condition associated with the possible release of energy caused by contact or approach to live parts.

Voltage (of a circuit).—The greatest root-mean-square (effective) difference of potential between any two conductors of the circuit concerned.

Voltage (nominal).—A value assigned to a circuit or system for the purpose of conveniently designating its voltage class (e.g., 208Y/120 V; 2400 V; 34 500 V). The operating voltage of the system may vary above or below this value within a range that permits satisfactory operation of equipment.

Voltage, Low.—Electric system and equipment operating at 600 V nominal or less.

Voltage, High.—Electric system and equipment operating at above 601 V nominal.

APPENDIX B.—ENERGIZED ELECTRICAL WORK PERMIT (NASA C–780)

Energized Electrical Work Permit

Part I: To be completed by the requester:

Job/Work Order Number/Contract Number:

1. Description of circuit/equipment/job location:

2. Description of work to be done:

3. Justification of why the circuit/equipment cannot be de-energized or the work deferred until the next scheduled outage:

Requester/Title _____ Date _____

Part II: To be completed by the electrically qualified persons performing the work:

1. Detailed job description procedure to be used in performing the above detailed work:

2. Description of the Safe Work Practices to be employed:

3. Results of the Shock Hazard Analysis:

4. Determination of Shock Protection Boundaries:

5. Results of the Arc Flash Hazard Analysis:

6. Determination of the Arc Flash Protection Boundary:

NASA C-780 (JUL 09) Page 1 of 2

7. Necessary personal protective equipment to safely perform the assigned task:

8. Means employed to restrict the access of unqualified persons from the work area:

9. Evidence of completion of a Job Briefing including discussion of any job-related hazards.

10. Do you agree the above described work can be done safely? ☐ Yes ☐ No *(If No, return to requester)*

Electrically Qualified Person(s) — Date

Electrically Qualified Person(s) — Date

Additional comments:

Part III: Approval signatures required allowing electrically energized work to be accomplished:

Requestor's Supervisor — Date

Project Manager/Engineer/COTR — Date

System Manager or Appropriate Safety Committee — Date

Safety Health and Environmental Division (SHED) — Date

Note: Once the work is complete, forward this form to the SHED at MS: 6-4 for review and retention.

NASA C-780 (JUL 09) Page 2 of 2

APPENDIX C.—ELECTRICAL POWER SYSTEM OPERATING INSTRUCTIONS

LOW VOLTAGE

LVEPS–OI–001, Revision 2	Naming Conventions for Low-Voltage Panels and Low-Voltage Apparatus
LVEPS–OI–002	Identification Plates for Low-Voltage Equipment
LVEPS–OI–003	Low-Voltage Metering Standards
LVEPS–OI–004	Standards for Conduit Installations
LVEPS–OI–005	Fluorescent Lighting Fixture Requirements
LVEPS–OI–006	Occupancy Sensor Requirements
LVEPS–OI–007	The Use of Flat Conductor Cable
LVEPS–OI–008	Working On or Near Low-Voltage Electrical Systems
LVEPS–OI–009	Low Voltage Electrical System Switching

HIGH VOLTAGE

HVEPS–OI–001	Procedures to Implement Technical Policies and Instructions
HVEPS–OI–002	Compliance With OSHA 29 CFR 1910.147 Lockout/Tagout Inspection Audit
HVEPS–OI–003	Compliance With OSHA 29 CFR 1910.147 Lockout/Tagout Inspection: Tagout Devices
HVEPS–OI–004	Work in Electric Power Manholes and Cable Tunnels
HVEPS–OI–005	Control and Relay Test Program
HVEPS–OI–006	Naming Conventions for Power Apparatus and Cables
HVEPS–OI–007	Place Name Tags on Power Apparatus and Cables
HVEPS–OI–008	Application of Arc Proofing on High-voltage Cables
HVEPS–OI–009	Procedure to Identify and Cut High-voltage Cables
HVEPS–OI–010	(unused instruction number)
HVEPS–OI–011	Work On or Near High-Voltage Electrical Equipment
HVEPS–OI–012	Designated Safety Person
HVEPS–OI–013	New and Modified Electrical Systems
HVEPS–OI–014	High-voltage Cables
HVEPS–OI–015	Protective and Auxiliary Relays
HVEPS–OI–016	Inspection and Acceptance Testing of New High Voltage Equipment at GRC
HVEPS–OI–017	Operation of First Energy/GRC 34.5kV Tie Circuit
HVEPS–OI–018	Operation and Maintenance Responsibilities for High-voltage Equipment

APPENDIX D.—EXAMPLES OF SIGNS, LABELS, AND TAGS

WARNING
HAZARDOUS AREA

BUILDING: 44

THE ELECTRICAL INSTALLATION IN THIS AREA IS RATED FOR:

CLASS 1, DIVISION 2, GROUP D

IN COMPLIANCE WITH NFPA 70

NO MODIFICATIONS MAY BE MADE TO THIS
AREA WITHOUT WRITTEN APPROVAL FROM
Robert Vanek, 3-2698.

THE GLENN OPERATING ORGANIZATION RESPONSIBLE FOR THIS AREA IS:
Facilities Division, Systems Management and Maintenance Branch - DFI

Sign printed on 2-10-06 To update this sign please contact the Glenn Safety Branch, e-mail: Safety-Office@GRC.NASA.GOV

Figure D.1.—Hazardous Area Warning Sign

Figure D.2.—Supply Station Entry Sign

Figure D.3.—Arc Flash Label

Front view Reverse (back) view

Figure D.4.—DANGER DO NOT OPERATE Tag

Front view

Reverse (back) view

Figure D.5.—CAUTION DO NOT OPERATE Tag

THIS IS NOT A LOCKOUT/TAGOUT TAG

Contents

1.0 PURPOSE 2
2.0 APPLICABILITY 2
3.0 BACKGROUND 2
4.0 POLICY 3
5.0 RESPONSIBILITIES 3
5.1 Area Safety Committees 3
5.2 System Manager 3
5.3 Building Manager 3
5.4 Research Facility Manager and/or Facility Operations Specialist 3
5.5 Designated Person 4
5.6 Supervisory Personnel 4
5.7 Requestor (Authorized Employee or Primary Authorized Employee) 4
5.8 Qualified Operator (Switchperson) 5
6.0 REQUIREMENTS (*NPR 8715.3*) 5
6.1 Medical and Physical Requirements (*NPR 8715.3, Section 7.4*) 5
6.2 Codes, Standards, and Instructions 5
6.2.1 Codes and Standards 5
6.3 Energy Control Program (*OSHA 29 CFR 1910.147 (c) (1)*) 6
6.4 Lockout/Tagout and Area Clearance Procedure (*SHeD GPL–QS–1100.2*) 6
6.5 Minimum Isolation Criteria (*OSHA 29 CFR 1910.147 (c)(4)*) 9
6.5.1 Isolation 9
6.5.2 Device Selection Responsibilities 9
6.5.3 Isolation of equipment/systems for safety or configuration control 10
6.6 Group Lockout or Tagout (*OSHA 29 CFR 1910.147 (f)(3)*) 11
6.7 Shift or Personnel Changes (*OSHA 29 CFR 1910.147 (f)(4)*) 11
6.8 Return to Service (*OSHA 29 CFR 1910.147 (e)(3)*) 12
6.9 Emergency Lockout Removal (*Exception to OSHA 29 CFR 1910.147 (e)(3)*) 12
6.10 Training and Communication (*OSHA 29 CFR 1910.147(c) (7)*) 12
6.10.1 Limitations of Tags *(OSHA 29 CFR 1910.147(c)(7)(ii)(A))* 13
6.10.2 Employee Retraining (*OSHA 29 CFR 1910.147(c)(7)(iii)*) 13
6.11 Inspections and Audits (*OSHA 29 CFR 1910.147 (c)(6)(ii)*) 13
7.0 RECORDS 14
8.0 REFERENCES 14
APPENDIX A .—DEFINITIONS AND ACRONYMS 15
APPENDIX B .—LOCKS, TAGS, AND DEVICES 18

List of Tables

TABLE I.—TAG INFORMATION 9

List of Figures

Figure B.1.—Lockout/Tagout Tag, shown above is the ONLY Authorized Tag at Glenn Research Center. 18
Figure B.2.—Lockout locks, ONLY red-bodied locks to be used for lockout/tagout. 18
Figure B.3.—All valve lockout. 19
Figure B.4.—Pneumatic valve lockout. 19
Figure B.5.—Gate valve lockouts. 19
Figure B.6.—Large breaker lockout. 19
Figure B.7.—Single-pole breaker lockouts. 20
Figure B.8.—Fuse lockouts. 20
Figure B.9.—Lockout/tagout kits. 20
Figure B.10.—Switching/Configuration Tag, provides information on system status or position, and it is not to be used for lockout/tagout purposes. 21

Chapter 9—Lockout/Tagout

Note: *The current version of this chapter is maintained and approved by the Safety and Health Division (SHeD). The last revision date of this chapter was July 2012. The current version is located at http://smad-ext.grc.nasa.gov/shed/pub/gsm/gsm-manual.pdf. Approved by: Chief of Safety and Health Division*

1.0 PURPOSE

This chapter establishes requirements for a program to achieve proper lockout/tagout (LO/TO) to protect employees and equipment from all sources of potentially hazardous energy at NASA Glenn Research Center (GRC). The program ensures that before an employee performs any construction, service, or maintenance on any machine, piece of equipment, or system, proper isolation is accomplished to prevent the unexpected energization, startup, or release of energy that could cause an injury. Specific definitions, practices, and procedures are outlined by the Occupational Safety and Health Administration (OSHA) as given in 29 Code of Federal Regulations (CFR) 1910.147, Control of Hazardous Energy (LO/TO).

2.0 APPLICABILITY

The provisions of this chapter are applicable to all NASA employees and to all other agencies, organizations, and contract personnel that could become exposed to potentially hazardous energy during the performance of their duties at GRC.

3.0 BACKGROUND

Employees constructing, servicing, or maintaining machines, equipment, or systems may be exposed to serious physical harm or death if hazardous energy is not properly controlled. Craft workers, machine operators, and laborers are among the 3 million workers who service equipment and face the greatest risk. Compliance with the LO/TO standard prevents an estimated 120 fatalities and 50,000 injuries each year. The authority for the LO/TO chapter is derived from the "NASA General Safety Program Requirements," NASA Procedural Requirement (NPR) 8715.3C, Section **3.4**, in conjunction with the Personnel Safety Certification Programs for Potentially Hazardous Operations and Materials specified in Section **7.4**. Because of the numerous types of hazardous energy sources one might be exposed to at GRC, the procedures set forth in this chapter apply, during all work activities, to the control and/or isolation of those energy sources capable of causing injury to personnel, damage to equipment, harm to the environment, and loss or compromise of test data. In addition to the many types of hazardous energy sources there are three main categories that must be accounted for when providing a safe work environment, and they are

Main—Energy sources that supply entire machines or complete systems

Secondary—Energy sources downstream or in series with main supplies

Stored—Energy sources in components that retain residual energy

Energy sources and work activities include, but are not limited to

Energy sources	***Work activities***
Acoustical systems	Adjustment
Chemicals, fuels, and cryogens	Calibration
Compressed gas	Cleaning
Electrical systems	Close proximity
Hydraulic systems	Construction
Ionizing/non-ionizing radiation	Inspection
Mechanical systems	Installation
Pneumatic systems	Maintenance
Spring tension and compression	Repair
Suspended or moving loads	Testing
Thermal systems (i.e., heat/cold)	
Vacuum systems	

If stored hazardous energy is present in any form, care must be taken to ensure that the residual energy is reduced to a nonhazardous level. Extra care must be exercised to avoid re-accumulation of energy to hazardous levels through special measures; grounding, continual bleed-off, and monitoring are some examples.

These standards do not apply to operations known as "hot tapping" (0, Definitions and Acronyms), dealt with on an individual basis by the appropriate Safety Committee and SHeD, or to cord- and plug-connected equipment if it is unplugged and the plug is controlled by the employee performing the maintenance.

4.0 POLICY

It is GRC policy at Lewis Field and Plum Brook Station to set requirements for the safe completion of tasks that introduce personnel to potentially hazardous sources of energy. Unless specifically stated otherwise in this document, proper work standards and safe procedures shall follow the recommendations of OSHA as well as American National Standards Institute (ANSI), IEEE, and National Fire Protection Association (NFPA) standards and regulations listed later in this chapter. This policy has been put in place so that trained personnel take the proper precautions and safeguards. Variances to these codes or standards must be approved through SHeD.

5.0 RESPONSIBILITIES

Center Safety and Mission Assurance (SMA) Directors shall develop required safety certification programs for their Center (NPR 8715.3, Section 7.4, Requirement **25106**). Medical offices and cognizant health officials shall determine the need for physical and medical examinations including their depth, scope, and frequency to support certification requirements.

5.1 Area Safety Committees

Area Safety Committees conduct third-party reviews of all proposed installations, modifications, and operations in their assigned area of responsibility. They should ensure that all systems containing energy sources meet minimum design, operational, and safety standards including methods of safely controlling that energy source when isolation (LO/TO) is required.

5.2 System Manager

System Managers are the accepted experts on their particular systems and are responsible for the operational status of those systems. The isolation of energy sources within these systems should only be allowed to occur with System Manager approval and after they have concurred with the impact upon the system, with the use of an Area Clearance Form, NASA **C–978** (see Section **6.4**). The System Manager should help in the initial process to determine where isolation should occur to prevent the least amount of impact to systems involved, while providing safe isolation between personnel and the energy sources to which they could potentially be exposed.

5.3 Building Manager

The primary responsibility of a Building Manager is to represent the building occupants as the primary communications focal point. The Building Manager is responsible for assuring that any concerns, changes, impacts (such as an interruption of services), plans, or general information is effectively communicated to all building personnel. (Affected Employees, see Appendix A, Definitions and Acronyms). The Building Manager can only forward the information provided by the Area Clearance Form (NASA **C–978**) as to the impact to building personnel; they are not responsible for unanticipated disruptions in service.

5.4 Research Facility Manager and/or Facility Operations Specialist

The Research Facility Manager and/or Facility Operations Specialist directly oversee facilities within the aforementioned systems and in many situations may be considered the affected employee (see Appendix **A**), Definitions and Acronyms) or might even be the Designated Person. LO/TO must be approved by the corresponding Research Facility Manager or Facility Operations Specialist through the Area Clearance Process, to ensure that operations, research in progress, or required services are not disrupted.

5.5 Designated Person

A Designated Person shall be in charge of LO/TO procedures (see Appendix **A**, Definitions and Acronyms). Such a person(s) shall be a knowledgeable individual who is specifically appointed with overall responsibility to ensure that all energy sources are under LO/TO. The Electrical Power Dispatch (EPD)/Central Air Dispatch (CAD) personnel provide the written procedures (switching orders and/or tagging records) for isolation of energy sources at GRC Lewis Field within the central process systems. They also maintain LO/TO records for tracking tag activity and system status; tags applied under these written orders shall be marked as such: *CENTRAL CONTROL DISPATCH. For research and/or test facilities or institutional facilities not covered as part of the central process systems, the Research or Facility Managers or their designee shall be responsible for developing the necessary procedures. At Plum Brook Station, the Systems Manager's designated system engineer develops the written procedures for LO/TO of the equipment and systems under their assigned areas and maintains the required records and documentation. In any of the aforementioned situations, the person(s) authorizing the switching and/or isolation required will be considered the Designated Person.

The Designated Person shall be kept informed of operating conditions affecting the safe and reliable operation of the system. They shall maintain a suitable record showing operating changes in such conditions and issue or deny authorization for switching, as required, for safe and reliable operation. When more than one crew, craft, department, etc. is involved, assignment of the overall lockout or tagout control responsibility will be assigned to the Designated Person to coordinate affected workforces and to ensure continuity of protection.

The Designated Person shall provide written isolation procedures and maintain a record showing tag placement and device activity (GRC Lockout/Tagout Planning Form, NASA **C–787** or equivalent).

5.6 Supervisory Personnel

Supervisors are responsible for assigning only trained personnel (certified if specified in the job classification) to accomplish tasks involving hazardous energy sources. It is the supervisor's responsibility to ensure assigned personnel are properly trained, whether acting as an authorized employee, performing LO/TO to safely work on equipment, systems, or processes they have been deemed qualified to work on, or as a Qualified Operator (Switchperson) performing isolation requirements. They are also responsible for providing lists of authorized employees (see Section **5.7**) and Qualified Operators/Switchpersons (see Section **5.8**) to the personnel responsible for providing the written LO/TO procedures. If an employee requesting permission to perform LO/TO is not listed as an authorized employee, permission shall be denied until their supervisor has vouched for their training and added their name(s) to the list of authorized employees. Supervisors are also responsible for providing the list of personnel, whether by Qualified Operators List (NASA **C–580**) or other written means, to the Designated Persons overseeing isolation and/or switching procedures to allow LO/TO to be performed. Supervisors may also be required to perform emergency lockout removal (see Section **6.9**).

5.7 Requestor (Authorized Employee or Primary Authorized Employee)

The Requestor locks and/or tags out equipment, systems, or processes to perform servicing, maintenance, alteration, or other activity as required. The Requestor is the one protected by the LO/TO and is therefore the only one that shall actually place the LO/TO device(s) and the only one authorized to remove the LO/TO device(s) (see see Section **6.9**, Emergency Lockout Removal). The Requestor maintains possession of the keys to the lockout devices installed for his/her protection (see Section **6.7**). An affected employee (see Appendix **A**, Definitions and Acronyms) becomes an authorized employee when that employee's duties include performing servicing or maintenance covered under this section. Personnel shall be trained on recognition of hazardous energy sources, type and magnitude of the energy available including possible residual energy, and the proper methods and means for isolation and control. They shall be trained on the use of necessary test equipment to properly verify the loss or absence of the energy source(s) being isolated. They shall also be trained on the required personal protective equipment (PPE) to safely accomplish these duties. An authorized employee may or may not be a Qualified Operator (see Section **5.8**). When a crew (group) is utilized to perform a task, primary authorized employee may be assigned as the Requestor and may have LO/TO responsibility for the crew rather than requiring LO/TO for each individual involved.

The Requestor shall apply to the Designated Person to have the particular energy source de-energized or controlled. After the equipment, lines, or sources of energy have been safely isolated, the Requestor and those under his/her direction may proceed with work on the de-energized parts. Equipment may be re-energized for testing purposes only under the supervision of the Requestor and subject to authorization by the Designated Person.

The Requestor, upon completion of the work and after ensuring that all persons assigned are in the clear, tools and materials are picked up and safety grounds, if required, are removed, shall report to the Designated Person that all tags protecting that person or crew may be removed.

5.8 Qualified Operator (Switchperson)

A Qualified Operator is someone who has received training on the machines, equipment, or processes of LO/TO, on the safe procedures for accomplishing LO/TO and the isolation methods used, and in the proper PPE required to achieve LO/TO safely.

It is also someone who has, in the opinion of his supervisor, demonstrated through hands-on operation and site-specific knowledge shown the ability to safely perform isolation procedures and orders. Often the list of Qualified Operators accompanies or is part of safety permit request forms required for system, process, or test facility operational safety permits.

6.0 REQUIREMENTS (*NPR 8715.3*)

Employees performing work on the various systems at GRC shall have a working knowledge of the following documents, procedures, and policies and shall comply with the requirements therein. If a conflict arises between this chapter and local, state, or Federal regulations, the most stringent requirements shall apply. Organizations involved in these tasks shall, upon request, provide support information and/or documentation (Including training records if not available through SATERN) to SHeD to show compliance with these requirements.

6.1 Medical and Physical Requirements (*NPR 8715.3, Section 7.4*)

Personnel who perform or control hazardous operations shall be trained and certified with the necessary knowledge, skill, judgment, and physical ability (if specified in the job classification) to do the job safely (NPR 8715.3, Section 7.4, Requirement **25113**).

6.1– The SHeD verification procedure, to ensure compliance with the requirement listed in this section is adhered to, shall be accomplished by reviewing, when determined by NPR 1800.1, Appendix G, to be necessary, appropriate documentation (medical records).

6.2 Codes, Standards, and Instructions

The following codes, standards, and instructions relate to the safe design, construction, operation, and maintenance of electric power systems at GRC. The latest versions of these publications or documents shall be followed.

6.2.1 Codes and Standards

- Occupational Safety and Health Act (*OSHA 29 CFR 1910.147*)

  OSHA (Public Law 91–596) covers conditions, practices, or operations to ensure safe and healthful work places.

- Control of Energy Sources for Construction and Demolitions Operations (*ANSI A10.44*)

  This standard establishes minimum requirements for the control to prevent release of energy sources that could cause injury or illness to personnel performing these tasks.

- Control of Hazardous Energy Lockout/Tagout and Alternate Methods (*ANSI Z244.1*)

  This standard establishes requirements for the control of hazardous energy associated with machines, equipment, or processes that could cause injury to personnel. It establishes performance objectives for procedures, techniques, designs, and methods that protect personnel where injury can occur as a result of the unexpected release of hazardous energy.

- National Electrical Safety Code (*NESC, IEEE C–2, Part 4*)

  The NESC (IEEE and American National Standard Institute (ANSI), C2) covers basic provisions for protecting personnel from electrical hazards during switching control procedures, de-energizing equipment or lines to protect personnel, and the application and removal of working (safety) grounds.

- Standard for Electrical Safety in the Workplace (*NFPA 70E*)

  This standard provides the basis for Arc Flash Protection, Section 130 Working On or Near Live Parts, and Section 120, establishing an Electrically Safe Work Condition.

- Electric Power System Operating Instructions (*LVEPS–OI xx and HVEPS–OI xx*)

  The GRC Low-Voltage Electrical Power System (LVEPS) and High-Voltage Electrical Power System (HVEPS) Managers periodically issue numbered operating instructions applicable to their respective systems. Personnel responsible for design, operation, maintenance, construction, or repair of such systems shall be familiar with and follow these instructions (see Glenn Safety Manual, Chapter **8**, Section **5.4** and Section **5.2** of this document).

6.2 The SHeD verification procedure, to ensure compliance with the requirements listed in this section are adhered to, will be through a combination of review processes (HASPs, Safety Permits, design reviews, etc.) and/or worksite/building inspections.

6.3 Energy Control Program (*OSHA 29 CFR 1910.147 (c) (1)*)

The employer shall establish a program consisting of energy control procedures, employee training, and periodic inspections to ensure that before any employee performs any servicing or maintenance on a machine or equipment where the unexpected energizing, startup, or release of stored energy could occur and cause injury, the machine or equipment shall be isolated from the energy source and rendered inoperative. This will be accomplished through LO/TO methods and an onsite LO/TO training program sponsored through SHED. When outside contract personnel perform LO/TO at GRC they shall be trained through their employer as qualified employees, if their training requirements are less stringent than those at GRC, GRC LO/TO program policies shall be adhered to.

When an employee is required to remove or bypass a guard or other safety device; or an employee is required to place any part of his or her body into an area on a machine or piece of equipment where work is actually performed upon the material being processed (point of operation) or where an associated danger zone exists during a machine operating cycle LO/TO shall be required. When LO/TO is not used for tasks that are routine, repetitive, and integral to the production process or traditional LO/TO prohibits the completion of those tasks, then other alternative control methodologies, procedures, or combinations thereof shall be used to protect personnel. However, before adopting alternative methods of control, a risk assessment that demonstrates the adequacy and the effectiveness to provide the same level of protection as if LO/TO be accomplished must be done.

6.3 The SHeD verification procedure, to ensure compliance with the requirements listed in this section are adhered to, will be through a combination of review processes (HASPs, Safety Permits, design reviews, etc.) and/or worksite/building inspections.

6.4 Lockout/Tagout and Area Clearance Procedure (*SHeD GPL–QS–1100.2*)

The authorized employee (Requestor) working with the System, Facility, and/or Research Managers along with the Area Supervisor(s) and the affected employee(s) will identify any device(s) that are needed to safely isolate equipment, systems, or processes that are in his/her area of responsibility. This step in the planning process is required to not only provide safe isolation/control of energy sources to protect the Requestor, but also to reduce impact to outlying facilities and/or systems.

The Requestor shall apply to the Designated Person to have a particular energy source, piece of equipment or system isolated, identifying it by position, letter, color, number, or other means. The Designated Person shall provide written isolation procedures (Switching Orders) that clearly and specifically outline the scope, purpose, and techniques to be utilized for the control of hazardous energy sources, and the means to enforce compliance including, but not limited to, the following:

(A) A specific statement of the intended use of the procedure;
(B) Specific procedural steps for shutting down, isolating, blocking and securing machines or equipment to control hazardous energy;
(C) Specific procedural steps for the placement, removal and transfer of lockout devices or tagout devices and the responsibility of them; and

(D) Specific procedural steps for testing a machine or equipment to determine and verify the effectiveness of lockout devices, tagout devices, and other energy control measures.

NOTE: Not all pieces of equipment require a written lockout/tagout procedure. A written procedure is not needed if the following 8 requirements are met; (1) The machine or equipment has no potential for stored or residual energy or re-accumulation of stored energy after shut down which could endanger employees; (2) the machine or equipment has a single energy source which can be readily identified and isolated; (3) the isolation and locking out of that energy source will completely deenergize and deactivate the machine or equipment; (4) the machine or equipment is isolated from that energy source and locked out during servicing or maintenance; (5) a single lockout device will achieve a locked-out condition; (6) the lockout device is under the exclusive control of the authorized employee performing the servicing or maintenance; (7) the servicing or maintenance does not create hazards for other employees; and (8) the employer, in utilizing this exception, has had no accidents involving the unexpected activation or re-energization of the machine or equipment during servicing or maintenance

The Designated Person shall direct the operation of all switches, valves, or lines through which energy may be supplied to be placed in a state, by a Qualified Operator/Switchperson, as to control the possible energy release and shall direct that those components be rendered inoperable, locked, and tagged by the Requestor. The Designated Person shall maintain a record (GRC Lockout/Tagout Planning Form, NASA **C–787**or equivalent) showing tag placement and device activity.

After the equipment, lines, or sources of energy have been safely isolated, the application of lockout or tagout devices to energy isolating devices has been accomplished and all potentially hazardous stored or residual energy has been relieved, disconnected, restrained, and/or otherwise rendered safe, the Requestor and those under his/her direction may, once verified safe, proceed with work on the de-energized or isolated parts. Equipment may be re-energized for testing purposes only under the supervision of the Requestor (Authorized Employee) and subject to authorization by the Designated Person. If there is a possibility of reaccumulation of stored energy to a hazardous level, verification of isolation shall be continued until the servicing or maintenance is completed, or until the possibility of such accumulation no longer exists.

When performing LO/TO causes a disruption of service(s) an Area Clearance Form, NASA **C–978**, shall be completed. The purpose of this process is to identify the approach for planning, coordinating, approving, authorizing and implementing required system isolation(s) and outage(s) and to provide notification to the affected employee(s) (see Appendix **A**, Definitions and Acronyms). Where only local service is disrupted, such as a single machine or office, an e-mail routed through the Building Manager to the affected employee(s) will suffice. (Affected Employees shall be informed prior to Lockout/Tagout occurring and before Lockout/Tagout removal). The Area Clearance Procedure can be accessed online.

If a disruption in services is going to occur, the Requestor (or his/her representative) shall generate an Area Clearance Form (NASA **C–978**) and route for approval. The Requestor should attain information from the System Manager, Research and/or Facility Managers, and Designated Person as to the proper points of isolation required to safely perform their task and the areas or personnel to be affected. Affected Employees shall be informed prior to Lockout/Tagout occurring and before Lockout/Tagout removal. When building services are to be disrupted, the Building Manager will be considered the affected employee for that building. The Building Manager will be responsible for the notification to personnel within their buildings and approving (signing) the Area Clearance Form, NASA **C–978**. The following signatures are required:

- Requestor
- Project engineer or technician
- Contractor's representative
- Quality control

  Note*: One of the above signatures must be a civil servant.*

- The support service contractor's Contracting Officers Technical Representative (SSC COTR) signature is required if the SSC is involved with supporting the LO/TO procedures.
- Facility Manager or Facility Operations Specialist signs, acknowledging the impact to their facility.

- Project Manager signs and concurs with the need for the outage in order for the project to be completed.
- System Manager signs, acknowledging the impact to their system.
- Building Manager signs, acknowledging that the personnel within the affected area(s) have been notified.
- SHeD representative signs, concurring with the need for the service disruption and that safety systems are not impacted without proper notification.
- Designated Person (EPD, CAD, etc. if they are generating the isolation procedures), should be the last to sign. Since they are generating the isolation procedures there should be approvals by all parties listed before they are requested to begin.

To establish a safe work condition, it is critical to identify all sources or potential sources of energy. The method of hazardous energy control selected depends on whether the task can be performed with or without energized conditions. In all cases, the primary method of control will be LO/TO. This process entails placing a red-bodied lock with a locking device and proper tag (see Appendix B, Figure B1) on the final point of isolation. Tags shall be attached using a non-releasable, non-reusable nylon cable tie (tie wrap) with a minimum 50lb breaking strength. Locks intended for use under the requirements of this chapter must not be used for any other purposes.

If an energy isolating device is capable of being locked out, lockout shall be used (see section 6.5.1). If an energy isolating device is not capable of being locked out, a tagout program shall be used (see section 6.10.1). When a tagout device is used in lieu of lockout, it must be demonstrated that an effective level of safety is achieved, providing full employee protection, in the tagout program. Additional protective means shall include but are not limited to the

- Removal of an isolating circuit element such as a fuse, verify loss of energy, and maintain control of the fuse(s)
- Blocking of a controlling switch and ensuring it cannot be inadvertently operated
- Opening of an extra disconnect, where a second action must now occur
- Removal of valve handles to reduce the chance of an inadvertent operation

All newly acquired equipment involving potentially hazardous energy sources must be outfitted to accommodate lockout devices per 29 CFR 1910.147 (c)(2)(iii). Also included is any equipment that is replaced, renovated, or has major repairs conducted on it. In these instances, the equipment must be retrofitted to accommodate lockout devices per 29 CFR 1910.147 (c)(2)(iii).

Before starting work on machines, equipment, or processes that have been locked and/or tagged out, verification of isolation and de-energization shall be accomplished by the authorized employee or primary authorized employee. Verification may be accomplished by testing circuitry, cycling, visually inspecting position, manually trying, monitoring movement or discharge, observing bleeds, gauges, indicators, etc., or other available means. When verifying voltage absence, the hot-dead-hot method shall be used (see Appendix **A**, Definitions and Acronyms). For electrical isolation, safety grounds may be required.

Whether lockout and/or tagout is used, the Requestor shall be responsible for placing the LO/TO, verifying that the hazardous energy has been safely controlled, and removing the LO/TO (see Section 6.9 for emergency removal).

> ***Note****: Whether LO/TO or simply tagout methods are utilized, a DANGER, DO NOT OPERATE tag (NASA–C946a, Stock No. 7530–01–LNO–1449) shall be used and completely filled out. Table I below shows the information required on the tag. Tags shall be attached using a non-releasable, non-reusable nylon cable tie (tie wrap) with a minimum 50lb breaking strength.*

TABLE I.—TAG INFORMATION

Front Side	Back (Reverse) Side
Local or Central Control Dispatch Tag Tag Number Apparatus Name (Requestor) Date Phone Dispatcher (on duty for isolation)	Switchperson(s) (Qualified Operator) Phone number Print lock number in the REMARKS area. Also indicate position that the tagged apparatus is in (open, closed, etc.)

6.4 The SHeD verification procedure, to ensure compliance with the requirements listed in this section are adhered to, will be through a combination of review processes (HASPs, Safety Permits, design reviews, etc.) and/or worksite/building inspections.

6.5 Minimum Isolation Criteria (*OSHA 29 CFR 1910.147 (c)(4)*)

The following minimum criteria will be used to determine that a "Safe Work Condition" has been achieved.

6.5.1 Isolation

Isolation is the operation of a device(s) necessary to make equipment (system) safe to work on.

- Mechanical Systems

One-point isolation is for working "on" the system and two-point isolation for working "in" the system. A point of isolation would be considered a valve, blind (blank) flange, blocking or bracing a valve, etc., that provides a physical means for the control of the hazardous energy source.

- Electrical Systems

One break (open) is required for working on low-voltage systems, 600 volts and below, and two opens are required for working on high-voltage electrical systems, above 600 volts. A break would be an open breaker, disconnect, or fuse holder, etc. With high-voltage isolation, when two breaks are not available, grounds will be applied and represent the second means of isolation. These grounds will not replace the need for working crews' safety grounds.

6.5.2 Device Selection Responsibilities

It is important that the responsibilities for critical decisions be clearly defined when planning LO/TO. The following is offered to clarify who is responsible for device selection.

6.5.2.1 Equipment/System/Process Isolation (Not Part of the Central Process System)

The authorized employee working with the System, Facility, and/or Research Managers along with the Area Supervisor and the affected employee(s) will identify all devices that are needed to safely isolate equipment, systems, or processes that are in his/her area of responsibility. This step in the planning process is required to not only provide safe isolation/control of energy sources to protect the authorized employee (Requestor) but also to provide minimal impact to outlying facilities and/or systems.

6.5.2.2 Central Process Distribution System Isolation

The EPD or CAD will assume the function of the Designated Person. This includes matters relative to distribution equipment modification or when facility isolation is necessary (single or group). The EPD will be responsible for defining all electrical isolation devices associated with the GRC power distribution system. The CAD will be responsible for defining all valves necessary to safely isolate the air distribution system.

6.5.2.3 System Boundaries

The following devices are used to assist in defining boundaries within the Central Process System. When a device is needed for isolation and is outside the Area Supervisor's or Appropriate Manager's responsible area then the adjoining Area Supervisor and/or Manager will be responsible for clearly identifying the appropriate device.

The following are general guidelines to be used when specific guidelines are not available:

1. The boundary between the electrical power distribution system and an area is the first device out of the substation.
2. The boundary between the air service generation equipment and the distribution system is the first valve outside the generating building.
3. The boundary between the distribution system and the utilization equipment is the cell isolation valve.

   ***Note**: In all cases, the final point of isolation is where the LO/TO devices will be placed. Work may proceed only after verification to the control of the hazardous energy has been accomplished.*

6.5.3 Isolation of equipment/systems for safety or configuration control

Lockout/Tagout, by OSHA definition, is only supposed to be placed by the personnel that are being protected by the isolation device(s) that the lockout/tagout devices are being attached to. They shall control the keys and they shall be the ones that remove the locks that they applied. Lockout/Tagout is not a means of controlling the configuration of systems or equipment to provide safety for others to work under or to isolate potential areas where unsafe conditions might occur, that should be accomplished using the NASA C-946 is a "**Caution** - Do Not Operate" tag. In order to stay within this statement of application, and still provide safety through configuration (positioning) control of an isolation device from other situations where exposure to a hazardous energy under abnormal circumstances might occur, the Glenn Lockout/Tagout Program has authorized the use of this second tag for these situations.

The NASA C-946 is a "**Caution** - Do Not Operate" tag, it is a yellow and black tag that indicates component/system control, configuration or status. Although this tag receives it's authorization by virtue of the Glenn Lockout/Tagout Program and is used, when accompanied by a lock, to secure isolation points in various types of systems it **is not** a "lockout/tagout tag" nor is it to be used for the purpose of lockout/tagout by OSHA definition. The use of the "**Caution** - Do Not Operate" tag is also covered as part of the Lockout/Tagout training.

The intent behind these tags is to allow for the control of systems and/or equipment providing status of a required configuration or to provide warnings of tests in progress, secondary points of energy isolation, tie circuit status, etc. This tag should only be removed by or with permission of the person(s) who placed it. When used as a means for configuration control of distributive systems to or throughout buildings (Institutional, Central Process, Cryogenic/Gaseous, etc.) this tag should only be used with permission of the responsible FD System Manager. Though the removal of such tags may not place personnel or equipment directly in a hazardous situation it might have adverse effects that could potentially cause a hazardous situation to occur. Examples of institutional systems would include Chilled Water, Domestic Water, Electrical (high voltage and low voltage), Protective /Security, Steam/Condensate etc.

The difference between these tags is that one (the NASA C-946a, Danger tag) is saying that someone , in the process of performing a task, would be immediately exposed to a hazardous energy source if the tag were removed and the device operated (thus the warning "DANGER"). The other (the NASA C-946, Caution tag) is saying there is a **potential** for someone to be injured **if** the device were operated and **if** personnel were in the area where the equipment is located; or, if a configuration change is being made to a system in which the System Manager is responsible. Both tags are used to control hazardous energy in the above explanation, both tags provide information on who to contact, both tags say "Do Not Operate", both tags are authorized through the lockout/tagout program and are to be adhered to. It is extremely important to differentiate between the "**will place**" (Danger tag) or "**could place**" (Caution tag) someone in jeopardy. With lockout/tagout a red lock must be hung with the Danger tag on the isolating device, with the Caution tag a lock is optional (often preferred), but when a lock is used it must be other than a red lock.

6.5 The SHeD verification procedure, to ensure compliance with the requirements listed in this section are adhered to, will be through a combination of review processes (HASPs, Safety Permits, design reviews, etc.) and/or worksite/building inspections.

6.6 Group Lockout or Tagout (*OSHA 29 CFR 1910.147 (f)(3)*)

Separate tasks require separate LO/TO locks and tags to provide the proper level of protection for all employees involved.

When servicing and/or maintenance is performed by a crew, they shall utilize a procedure which affords each employee within the crew a level of protection equivalent to that provided by the implementation of a personal lockout or tagout device. Group LO/TO shall be used in accordance with standard LO/TO requirements: Procedures shall be developed, documented, and utilized for the control of potentially hazardous energy with primary responsibility vested in an “primary authorized employee” for a set number of employees working under the protection of a group lockout or tagout device (such as a~~n~~ “job lock” or “operations lock”). In addition to the group lockout device each member of the crew hangs their personal lock.

Each authorized employee must affix a personal LOTO device to the group lockout device, group lock-box or comparable mechanism and remove that device when he/she are finished with the servicing or maintenance activity. No person may attach or remove another person's LOTO device. The authorized employee in charge of a crew (“Principal Authorized Employee”) does not remove the group lockout or tagout mechanism from the energy isolating devices until each employee in the group has removed her personal device. Individual employee device removal indicates that employees are no longer exposed to the hazards from the servicing or maintenance operation. Most importantly, these group LOTO devices (personal lockout or tagout devices; group LOTO mechanisms) ensure that the equipment LOTO devices are maintained on energy isolating devices throughout the "life of the job."

Primary responsibility is vested in a “primary authorized employee” for a set number of employees working under the protection of a group lockout or tagout device The Designated Person will make provisions to ascertain the exposure status of individual group members with regard to the lockout or tagout of the machine or equipment. When more than one crew, craft, department, etc. is involved, assignment of the overall lockout or tagout control responsibility will be assigned to a Designated Person to coordinate affected work forces and ensure continuity of protection. At GRC, each separate task will require a separate LO/TO to be accomplished.

Instructions to re-energize machines, equipment, or processes that have been de-energized by permission of the Designated Person shall not be issued by the Designated Person until all employees who requested the LO/TO have reported clear.

6.6– The SHeD verification procedure, to ensure compliance with the requirements listed in this section are adhered to, shall be accomplished by random inspections of work sites. Documentation of procedures shall be provided to SHeD personnel upon request.

6.7 Shift or Personnel Changes (*OSHA 29 CFR 1910.147 (f)(4)*)

Specific procedures shall be utilized during shift or personnel changes to ensure the continuity of lockout or tagout protection, including provision for the orderly transfer LO/TO device protection between off-going and oncoming employees, to minimize exposure to hazards from the unexpected energization or startup of the machine or equipment, or the release of stored energy. These procedures shall entail *personal* transference of keys from one authorized employee to another with notification to the Designated Person (EPD, CAD, etc.). This procedure also involves the use of the term “Or” as the Requestor on the lockout/tagout plan. The transference of lockout keys from one authorized employee to another constitutes transferring ownership of the “lock” because the protected authorized employee maintains control of the lockout device. If transference of keys does not occur then additional LO/TO must be performed before the present authorized employee or primary authorized employee may begin work.

Based on the requirements found in the Directive on the Control of Hazardous Energy-Enforcement Policy and Inspection Procedures, CPL 02-00-147 p3-59; The *Job Lock* is the first lock placed on the energy isolating device(s) or lockbox, and it is the last one removed when the job is complete. Each primary authorized employee from each shift controls the key to the job lock. Individual Authorized Employees shall hang their locks respectively. The Authorized Employee (Primary Authorized Employee) who applies the continuity device, *Job Lock*, may or may not be the same Authorized Employee who removes it.

6.7– The SHeD verification procedure, to ensure compliance with the requirements listed in this section are adhered to, shall be accomplished by random inspections of work sites. Documentation of procedures shall be provided to SHeD personnel upon request.

6.8 Return to Service (*OSHA 29 CFR 1910.147 (e)(3)*)

Prior to "return to service," the work area(s) should be inspected by the authorized employee or primary authorized employee to ensure that the system, equipment, or process is intact, free of tools and debris, all guards have been reinstalled, and all employees are in the clear. They must ascertain that everyone connected with the work on the system is accounted for before the locks and tags are cancelled. Each LO/TO device shall be removed from the energy isolating device(s) by the authorized employee or primary authorized employee who was protected by the device.

The Requestor shall report to the Designated Person that all tags protecting that person or crew may be removed, but before a machine, piece of equipment or process is started or placed into service, the Affected Person(s) shall be notified. The Area Clearance Form provides tentative schedules for outages and restorations; personnel working in the affected areas shall be notified if those schedules are altered. The Designated Person working with the Requestor and Qualified Operator/Switchperson coordinates the removal of the lockout/tagout devices and tags and the restoration of systems/equipment to normal service.

6.8– The SHeD verification procedure, to ensure compliance with the requirements listed in this section are adhered to, shall be accomplished by random inspections of work sites.

6.9 Emergency Lockout Removal (*Exception to OSHA 29 CFR 1910.147 (e)(3)*)

When the authorized employee/requestor is unavailable to remove his/her LO/TO device(s), the device(s) may be removed by contacting the requestor's supervisor (supervisor must be an authorized employee who has received lockout/tagout training) and using the following procedures:

- The authorized employees' Supervisor verifies that the authorized employee is not available to remove his/her LO/TO device(s). This should occur only after every possible effort to contact the authorized employee has been made.
- The Supervisor of the authorized employee notifies the Area Supervisor, Designated Person, and/or the affected employee that he/she will assume responsibility of the LO/TO device(s) and, when determined safe to do so, will remove them in accordance with the procedure that would have been used by the listed authorized employee.
- The Supervisor shall, either through discussion with personnel involved with the task or personal knowledge and inspection, verify that the worksite is cleaned up, tools are removed, and that the equipment/systems are safe to place back in service.
- The Supervisor of the authorized employee will notify all parties upon the actual removal of the LO/TO device(s) and ensure that the authorized employee is notified prior to returning to the job.
- The Supervisor will also notify the authorized employee's line management and SHeD, documenting the required action(s) and the justification.

6.9– The SHeD verification procedure, to ensure compliance with the requirements listed in this section are adhered to, shall be accomplished by random inspections of work sites. Documentation of procedures shall be provided to SHeD personnel upon request.

6.10 Training and Communication (*OSHA 29 CFR 1910.147(c) (7)*)

GRC, through SHeD, shall develop and provide training to ensure that the purpose and function of the energy control program are understood by its employees. Classroom training and testing shall be utilized to verify that the knowledge and skills required for the safe application, usage, and removal of the energy controls are acquired by employees. The training shall be coordinated by the Human Capital Development Branch and records maintained in SATERN. The training shall include the following:

- Each authorized employee shall receive training in the recognition of applicable hazardous energy sources, the type and magnitude of the energy available in the workplace, and the methods and means necessary for energy isolation and control.

- Each affected employee shall be instructed in the purpose and use of the energy control procedure.
- All other employees whose work operations are or may be in an area where energy control procedures may be utilized, shall be instructed about the procedure, and about the prohibition relating to attempts to restart or re-energize machines or equipment that are locked out or tagged out.

6.10.1 Limitations of Tags *(OSHA 29 CFR 1910.147(c)(7)(ii)(A))*

When tagout systems are used, employees shall also be trained in the following limitations of tags:

- Tags are essentially warning devices affixed to energy isolating devices and do not provide the physical restraint on those devices that is provided by a lock.
- When a tag is attached to an energy isolating means, it is not to be removed without authorization of the authorized person responsible for it, and it is never to be bypassed, ignored, or otherwise defeated.
- Tags must be legible and understandable by all authorized employees, affected employees, and all other employees whose work operations are or may be in the area, in order to be effective.
- Tags and their means of attachment must be made of materials that will withstand the environmental conditions encountered in the workplace.
- Tags may evoke a false sense of security, and their meaning needs to be understood as part of the overall energy control program.
- Tags must be securely attached to energy isolating devices so that they cannot be inadvertently or accidentally detached during use.

6.10.2 Employee Retraining (*OSHA 29 CFR 1910.147(c)(7)(iii)*)

Retraining shall be accomplished, at a minimum, every 4 years per NPR **8715.3C**, Chapter **7**, Section **7.4.6.1(e)**. Retraining shall also be provided for all authorized and affected employees whenever there is a change in their job assignments, a change in machines, equipment, or processes that present a new hazard, or when there is a change in the energy control procedures.

Additional retraining shall also be conducted whenever a periodic inspection reveals, or whenever the employer has reason to believe that there are deviations from or inadequacies in the employee's knowledge or use of the energy control procedures.

The retraining shall reestablish employee proficiency and introduce new or revised control methods and procedures, as necessary. If revised methods or procedures are not being introduced, proficiency can be reestablished by retesting only.

The employer shall certify that employee training has been accomplished and is being kept up to date. The certification shall contain each employee’s name and dates of training.

6.10 – The SHeD verification procedure, to ensure compliance with the requirements listed in this section are adhered to, shall be accomplished by reviewing SATERN records or other personnel training records, as required.

6.11 Inspections and Audits (*OSHA 29 CFR 1910.147 (c)(6)(ii)*)

Inspections and audits to show compliance to the standards of this chapter and OSHA 29 CFR 1910.147 must be conducted at least annually. The purpose of these inspections and audits are to gauge the effectiveness of all written procedures kept on file for specific tasks (Tagout Plan Annual Audit, NASA **C–787D**) and to ensure the requirements of this program are being followed (GRC Lockout/Tagout Inspection Form, NASA **C–787C**). Results of inspections or audits are to be certified by the employer and submitted to the responsible organization to be kept on file with a copy sent to the SHeD. The periodic inspection and/or audit shall follow the guidelines listed below;

- Inspections must be conducted by an authorized employee, other than the one utilizing the procedure being inspected (787C)

- Where LO/TO is used for energy control, include a review, between the inspector and each authorized employee, of that employees' responsibilities under the energy control procedure being inspected (787C)
- Where tagout is used, include an understanding of the authorized employees' responsibilities and how they may differ from LO/TO (787C)
- Audits must be conducted by an authorized employee to correct any deviations or inadequacies identified (787D)

NOTE: For purposes of procedure grouping, machines and equipment may be grouped together as one procedure if they all are listed or identified in the scope of the energy control procedure and if they all have the same or similar:

- Procedural steps for shutting down, isolating, blocking, securing, and dissipating stored energy in machines or equipment;
- Procedural steps for the placement, removal, and transfer of the lockout or tagout devices and the responsibility for them; and
- Requirements for testing a machine or equipment to determine and verify the effectiveness of LOTO devices and other control measures.

6.11 – The SHeD verification procedure, to ensure compliance with the requirements listed in this section are adhered to, shall be accomplished by random inspections of work sites. Documentation of procedures shall be provided to SHeD personnel upon request.

7.0 RECORDS

- GRC Switching and Lockout/Tagout Record, NASA **C–787**.—Maintained for 1 year by Designated Person.
- GRC Equipment/Apparatus Switching Record, NASA **C–787A**.—Maintained for 1 year by Designated Person.
- GRC Switching Action Record, NASA **C–787B**.—Maintained for 1 year by Designated Person.
- GRC Lockout/Tagout Inspection Form, NASA **C–787C**. — Maintained on file by Designated Person with a reference copy to SHeD.
- GRC Lockout/Tagout Annual Audit Form, NASA **C–787D**. — Maintained on file by Designated Person with a reference copy to SHeD.
- Area Clearance Form, NASA **C–978**.—Required for a disruption in service before a switching order is approved, maintained with **C–787**.

8.0 REFERENCES

Document Number	Document Name
29 CFR 1910 and 1926	Public Law 91–596, Occupational Safety and Health Act (OSHA), 1970
1910.147	The control of hazardous energy, lockout/tagout. (General Industry)
1926.417	Lockout and tagging of circuits. (Construction)
NPR 8715.3	NASA General Safety Program Requirements
GLM–QS–1700.1	NASA Glenn Safety Manual, BMS Document
GRC–P7500.004	Configuration Management
NFPA	National Electrical Code
NFPA 70E	Standard for Electrical Safety in the Workplace
HVEPS–OI-xx	High-Voltage Electric Power System Operating Instructions, various dates
LVEPS–OI-xx	Low-Voltage Electric Power System Operating Instructions, various dates

APPENDIX A.—DEFINITIONS AND ACRONYMS

Affected employee.—An employee whose job requires him/her to operate machinery or equipment on which servicing or maintenance is being performed under lockout/tagout (LO/TO), whose job requires him/her to work in an area in which such servicing or maintenance is being performed, or works in an area that has a disruption in services caused by the required LO/TO.

American National Standards Institute (ANSI)

Area Clearance Process.—Documented way of communicating a disruption in service. https://knowledgeshare.grc.nasa.gov/eRoomReq/Files/NASAc1f1/GRCKnowledgeBase/0_1c365/GLP-QS-1100_2_Area_Clearance.pdf

Area Supervisor.—An employee who is responsible for the operation of equipment and personnel in a given area.

Authorized. — Deemed qualified (certified where required) by one's supervisor to be able to perform an assigned task safely and competently.

Authorized employee (Requestor)**.**— A person (certified as required) who locks out and/or tags out machines or equipment in order to perform servicing or maintenance on that machine or equipment. The Requestor is the one protected by the LO/TO and is therefore the only one that actually places the LO/TO device and the only one that will remove that LO/TO device. An affected employee becomes an authorized employee when that employee's duties include performing servicing or maintenance covered under this section.

Capable of being locked out.—Equipped with an energy-isolating device that is designed with a hasp or other attachment or integral part to which, or through which, a lock can be affixed, or that has a locking mechanism built into it. Also includes other devices if lockout can be achieved without the need to dismantle, rebuild, or replace the device.

Central Air Dispatch (CAD)

Central process systems.—Services, facilities, equipment, and components managed, operated, and maintained by the Facilities and Test Engineering Division, which directly support research facilities. These facilities include any system, equipment, or component used for generating, supplying, conveying, distributing, conditioning, monitoring, measuring, removing, or processing of air, exhaust, lubricating oil, control oil, pneumatic controls, refrigerants, cooling tower water, natural gas, and the entire high-voltage electrical power distribution system. The end point of these systems, relative to test cells is generally recognized as the Central Process Systems isolation valve(s) serving a particular facility. The electrical power dispatcher (EPD) and the central air dispatcher must be involved in all lockout/tagout procedures involving the central process systems.

Code of Federal Regulations (CFR)

Contracting Officers Technical Representative (COTR)

Designated Person.—Person responsible for providing/preparing switching/isolation procedures for all individuals working within his/her area/system of responsibility on a specific job or task. The Designated Person shall be kept informed of operating conditions affecting the safe and reliable operation of these systems. They shall also maintain suitable records showing operating changes in such conditions and issue or deny authorization for switching, as required, for safe and reliable operation. Prior to releasing the lockout, the Designated Person will verify and assure that all individuals working under his/her lockout have completed their work, are accounted for, and will ensure that all employees are clear, all tools removed, and all guards reinstalled.

Designated safety person (DSP).—See Section **5.5**.

Electrical Power Dispatch (EPD)

Electrically safe work condition.—A state in which the conductor or circuit part to be worked on or near has been disconnected from energized parts, locked/tagged in accordance with establiSHeD standards, tested to ensure absence of voltage, and grounded if determined necessary. In this condition protective clothing is no longer needed.

Energized.—Connected to an energy source or containing residual or stored energy.

Energy isolating device.—A mechanical device that physically prevents the transmission or release of potentially harmful energy, for example, a disconnect switch, a blind flange, or a physical block preventing motion of a mechanical device or valve. (Control components such as push buttons and operating levers that are used in normal operation to direct energy flow or release do not qualify as energy-isolating devices.)

Energy source.—A source of potentially harmful electrical, thermal, pneumatic, mechanical, hydraulic, chemical, or other energy.

Final point of isolation.—The selected energy isolating device closest to the work being performed which is identified in the lockout/tagout procedure.

Glenn Research Center (GRC)

High-Voltage Electrical System.—Equipment, parts, and components used in distributing and utilizing electrical power to all institutional and research loads throughout the Glenn Research Center, at a voltage level greater than 600 V. This system is considered to be part of the Central Process Systems.

High-Voltage Electrical Power System (HVEPS)

Hot-dead-hot.—Validate the test equipment being used by measuring a known energized source, verify absence of isolated energy source, and validate the test equipment once more on a known energized source.

Hot tapping.—A procedure used in the repair, maintenance, and services activities which involves welding on a piece of equipment (pipelines, vessels, or tanks) under pressure, in order to install connections or appurtenances. It is commonly used to replace or add sections of pipeline without the interruption of service for air, gas, water, steam, and petrochemical distribution systems.

Lockbox.— Container for keys used for multiple lock tasks. Where multiple points of lockout are required for isolation, where the application of multiple locks on a single device could cause damage to that device, or where more than one crew or department may be working within the same isolation device(s) (each task requiring its own lockout/tagout procedure) a lockbox may be utilized. The actual “lockout” device keys shall be placed in the box with application of individual employee locks applied (with lock extenders as required) to the lockbox.

Lockout.—A procedure whereby one or more lockout device(s) is placed on an energy-isolating device(s) to ensure that neither the energy-isolating device nor the equipment being controlled can be operated until the lockout device is removed.

Lockout device.—A device that utilizes a positive means (such as a keyed lock) to hold an energy-isolating device in the safe position, thereby preventing the energizing of a machine or equipment. Lockout devices shall be substantial enough to prevent removal without the use of excessive force or unusual techniques, such as with the use of bolt cutters or other metal cutting tools.

Lockout/tagout (LO~~/~~TO)

Low-Voltage Electrical Power System (LVEPS)

Multiple lockout device(s).—A mechanical device, such as a hasp, enabling application of more than one lock to an energy-isolating device.

Normal operation.—The utilization of a machine or piece of equipment to perform its intended function.

NASA Procedural Requirement (NPR)

National Electric Safety Code (NESC)

National Fire Protection Association (NFPA)

Occupational Safety and Health Administration (OSHA)

Personal protective equipment (PPE)

Positive means of protection.—Prevention of potentially harmful release of energy by a means that would require unusual and obvious measures to defeat.

Primary Authorized Employee. – For group LOTO this employee would exercise primary responsibility for implementation and coordination of the overall LOTO of hazardous energy sources for the equipment to be serviced.

He also has the responsibility to ensure continuity of protection with respect to multi-shift energy isolation (e.g., through the use of group continuity devices, such as "Job Lock" or "Operations Lock" procedures).

Qualified.—Knowledgeable in the construction, operation, and installation of machines, equipment, and/or processes pertaining to one's assigned tasks and trained in recognizing and controlling any hazards involved.

Qualified Operator/Switchperson.—Personnel meeting minimum site-specific knowledge requirements on the machines, equipment, and/or processes they are responsible for during the execution of their daily duties. This knowledge is achieved through hands-on training and demonstrating the ability to safely operate and maintain the machines, equipment, or processes involved.

Servicing and/or maintenance.—Workplace activities such as constructing, installing, setting up, adjusting, inspecting, modifying, and maintaining and/or servicing machines or equipment. These activities include any situation where the employee may be exposed to the unexpected energization or startup of equipment or release of hazardous energy.

Safety and Health Division (SHeD)

Safety and Mission Assurance (SMA)

Safety and Mission Assurance Directorate (SMAD)

Support service contractor (SSC)

Switching orders.—Written or verbal step-by-step procedures developed by Designated Persons and utilized in the process for isolating and controlling sources of hazardous energy. These procedures specify an exact sequence of steps to be taken by Qualified Operators (Switchpersons) that are responsible for performing the isolation required for lockout and/or tagout of equipment, systems, and/or components.

Tagout.—The placement of a tagout device on an energy isolating device, in accordance with an establiSHeD procedure, to indicate that the energy isolating device and the equipment being controlled may not be operated until the tagout device is removed. Tagout devices, including their means of attachment, shall be substantial enough to prevent inadvertent or accidental removal. Tagout device attachment means shall be of a non-reusable type, attachable by hand, self-locking, and non-releasable with a minimum unlocking strength of no less than 50 pounds and having the general design and basic characteristics of being at least equivalent to a one-piece, all-environment-tolerant nylon cable tie.

APPENDIX B.—LOCKS, TAGS, AND DEVICES

Front Side	Back (Reverse) Side

Figure B.1.—Lockout/Tagout Tag, shown above is the ONLY Authorized Tag at Glenn Research Center.

Figure B.2.—Lockout locks, ONLY red-bodied locks to be used for lockout/tagout.

Figure B.3.—All valve lockout.

Figure B.4.—Pneumatic valve lockout.

Figure B.5.—Gate valve lockouts.

Figure B.6.—Large breaker lockout.

Figure B.7.—Single-pole breaker lockouts.

Figure B.8.—Fuse lockouts.

Figure B.9.—Lockout/tagout kits.

Front Side	Back (Reverse) Side

Figure B.10.—Switching/Configuration Tag, provides information on system status or position, and it is not to be used for lockout/tagout purposes.

Contents

1.0 PURPOSE....2
2.0 APPLICABILITY....2
3.0 BACKGROUND....2
4.0 POLICY....2
5.0 RESPONSIBILITIES....2
5.1 SHED....2
5.2 Project Managers and Researchers....3
5.3 Supervisors....3
5.4 Authority Having Jurisdiction....4
5.5 Employees....4
5.6 Medical Director, Occupational Medicine Services....4
5.7 Human Capital Development Branch Chief....4
6.0 REQUIREMENTS....4
6.1 Determining Hazardous Operations (*NASA NPR 8715.3C, Section 3.8)*....5
6.2 Elements of Hazardous Operation Certification (*NASA NPR 8715.3, Section 3.8*)....5
6.3 Hazardous Operating Permit (*NASA NPR 8715.3C, Section 3.8.2*)....5
6.4 Medical Surveillance (*29 CFR 1910* and *NASA NPR 1800.1*)....6

7.0 RECORDS....6

8.0 REFERENCES....6
APPENDIX A.—DEFINITIONS AND ACRONYMS....7

APPENDIX B—HAZARDOUS OPERATIONS PROCEDURES SAMPLE FORMAT....8

Chapter 10—Hazardous Operations

NOTE: *The current version of this chapter is maintained and approved by the Safety and Health Division (SHeD). The date of this chapter is August 2012. The current version is located on the Glenn Research Center intranet at http://smad-ext.grc.nasa.gov/shed/pub/gsm/gsm-manual.pdf. Approved by Chief of Safety and Health Division.*

1.0 PURPOSE

The purpose of the Hazardous Operations (HazOps) program is to protect employees who may engage in HazOps involving materials or equipment that, if misused or mishandled, have a high potential to result in loss of life, serious injury or illness to personnel, or damage to systems, equipment, or facilities. NASA Glenn Research Center (GRC) believes that adequate preparation and strict adherence to operating procedures can prevent most of these mishaps. .

2.0 APPLICABILITY

This chapter is applicable to all civil servant and support service contractor (SSC) employees assigned to GRC sites, construction contractors conducting or involved in HazOps. Requirements for protecting personnel and property during hazardous test operations are provided in Section **6.0** of this chapter.

3.0 BACKGROUND

Hazardous Operations must be assessed and properly controlled to protect the workforce, public, equipment, and facilities. Therefore, in order to comply with the requirement of NPR 8715.3C, SHeD has developed the following guidelines for current and future HazOps conducted at Lewis Field or Plum Brook Station.

4.0 POLICY

It is GRC's policy to comply with all applicable regulations regarding HazOps to prevent illness and injury of workers and damage to the environment, equipment, and facilities. To accomplish this, all personnel must comply with the requirements of this chapter.

Personnel who perform or control HazOps must be trained and certified with the necessary knowledge, skill, judgment, and physical ability (if specified in the job classification) to do the job safely.

It is also GRC's policy to ensure personnel obtain HazOps safety certification for those tasks that potentially have an immediate danger to the individual (death or injury to self) if not done correctly, could create a danger to other individuals in the immediate area (death or injury) or to the environment.

5.0 RESPONSIBILITIES

5.1 SHeD

The following are the responsibilities of SHeD:

- Provides guidance on evaluating HazOps and assist those, as needed, with obtaining an HOP when required.
- Reviews all HOPs
- Maintains an "approval" process for all HOPs
- Receives concurrence for the Authority Having Jurisdiction for HOPs that concern fire protection and life safety issues
- Ensures specific personnel certification requirements are established in cases where HazOps depend upon adherence to specific standards, guidelines, and training
- Recommends procedures to reduce the risk and minimize potential hazard exposures
- Verifies required training beyond that provided under the Hazard Communication Standard

5.2 Project Managers and Researchers

Project managers and researchers are responsible for

- Identifying HazOps in their areas and operations and following the requirements established to control hazards
- Contacting a SHeD industrial hygienist or safety engineer or both, as appropriate, to assist with determining what operations are considered HazOps
- Ensuring that all HazOps have been reviewed by fire protection and/or safety professionals
- Ensuring all HazOps are reviewed by SHeD and the contractor's safety and health representative has approved the procedure.
- Ensuring deviations or changes to the HOPs are documented and reviewed.
- Ensuring facility operating instructions and changes are developed based on the facility mission and operational requirements
- Ensuring all procedures include sufficient detail to identify residual hazards and cautions to NASA personnel
- Ensure HOPs title pages are marked conspicuously with "THIS DOCUMENT CONTAINS HAZARDOUS OPERATIONS PROCEDURES" to alert operators that strict adherence to the procedural steps and safety and health precautions are required to ensure the safety and health of personnel and equipment
- Ensure personnel other than certified operators are excluded from exposure to HazOps that depend upon adherence to specific standards, guidelines, and training
- Ensure the buddy system is used whereby an adjacent or nearby person not directly exposed to the hazard serves as an observer to render assistance where the risk of injury is high
- Ensure all HOPs, except for construction related activities, are governed by an approved safety permit.

5.3 Supervisors

Supervisors are responsible for the following:

- Identifying the HazOps and HOPs in their areas
- Complying with the requirements and/or conditions set forth in applicable HOPs or other procedures established to control hazard
- Conducting job hazard analyses, when appropriate, to ensure personnel have the proper personal protective equipment for HazOps
- Ensuring regulated areas are properly marked and access restricted
- Ensuring that employees performing HazOps are certified with the necessary knowledge, skill, judgment, and physical ability
- Managing the certification program for their employees and contractors in accordance with the requirements of this chapter
- Ensuring employees follow good work practices
- Ensuring employees meet training requirements and have knowledge of the hazards
- If industry-recognized training is not available, such as wind tunnel operator, developing a certification program to meet the requirements specified within Section **6.2**
- Providing a list of employees that require HazOps certification
- Managing employee certifications with System for Administration, Training, and Educational Resources for NASA (SATERN)

5.4 Authority Having Jurisdiction

The Authority Having Jurisdiction for Fire Protection and Life Safety must

- Review HOPs that have identified fire protection or life safety risks.

5.5 Employees

Employees are responsible for the following:

- Becoming familiar with HazOps in their work area
- Complying with the requirements and/or conditions set forth in applicable HOPs and with other requirements for controlling hazards
- Notifying supervisors of any uncontrolled hazards in their work areas
- Using personal protective equipment as specified in established work procedures (i.e., JHAs, safety permits, HOPs, Standard Operating Procedures (SOPs), etc.)
- Notifying their supervisors of any operational changes that would present new hazards
- Becoming certified to perform HazOps activities requiring certification (i.e., high-voltage work, critical lifts, wind tunnel operation, etc.)
- Attending required training

5.6 Medical Director, Occupational Medicine Services

Medical Services is responsible for

- Ensuring that physical and medical examinations to support certification requirements are in compliance with OSHA and other Federal, State, and local agency applicable codes, regulations, and standards
- Maintaining complete, accurate records of all physical and medical examinations for personnel in the certification program. Records are to be retained for at least 30 years. Results of examinations are to be discussed with employees as needed.

  NOTE: *The need for fitness-for-duty examinations should be based upon the hazardous consequences of the employee's inability to perform the job correctly due to physical or mental deficiencies. The certifying authority will determine if a medical examination is required.*

5.7 Human Capital Development Branch Chief

The Human Capital Development office is responsible for

- Scheduling employee training
- Maintaining records for employees who completed NASA-sponsored training and any associated examinations.

6.0 REQUIREMENTS

SHED must review HazOps at the Center. Hazardous Operations Procedure is required to address the hazards. The process must be appropriately controlled to prevent loss of life, serious injury or illness to personnel, or damage to systems, equipment, facilities, or the environment.

6.0 Verification: SHeD will review all HOPs meeting the definition in paragraph 6.1 and provide written concurrence that the HOP meets all of the requirements in this chapter.

Determining Hazardous Operations (*NASA NPR 8715.3C, Section 3.8)*. HazOps are any operations that involve materials or equipment that, if misused or mishandled, have a high potential to result in the following: Loss of life, Serious Injury or Illness to Personnel, or Significant Damage to Systems, Equipment, or Facilities

A hazardous operations procedure (HOP) is generally required in the following situations:

- Whenever engineering controls are either not feasible or have been shown to be inadequate to control a significant hazard to personnel or equipment.
- Whenever significant facility damage has occurred previously, but resulted in no personnel injury or loss of life, and that facility damage could have been prevented by following a detailed step-by-step procedure.
- Where personnel may be directly exposed to a significant hazard (thermal, mechanical, electrical, chemical, radiation, high or low pressure) that cannot be controlled by any other means.

NOTE: Before attempting to develop a HOP, a discussion between SHeD and the responsible organization is required to evaluate the necessity for the HOP and to investigate possible alternatives before proceeding.

6.1 Hazardous Operations Certification (*NASA NPR 8715.3, Section 3.8*)

The following are to be incorporated into the HazOps certification and documented, when required:

- Physical exam Initial training (online, classroom, and on-the-job)
- Written exam with passing score (70 percent or greater)
- Periodic refresher including emergency response procedures
- A recertification period (not to exceed 4 years)
- Applicable requirements related to federal regulations

6.1 Verification: Personnel who are hazardous operations certified or hazardous material handler certified are identified through the issuance of a card, license, badge or a listing on a personnel certification roster or database by their employer. Personnel certification rosters indicate the name, date, materials or operations for which certification is valid, name of certifying official, and date of expiration.

6.2 Hazardous Operations Permit or Hazardous Operations Procedure (*NASA NPR 8715.3C, Section 3.8.2*)

All HazOps must be assessed and analyzed to ensure that if they require an HOP, that the document contains the following information:

- Detailed procedure with step-by-step functions or tasks performed on the system or equipment to ensure safe and efficient operations
- Clear identification within the procedure when the HazOp begins and when it ends.
- Any special precautions, such as personal protective equipment, required to maintain a safe operation
- Start and stop times of the operation
- Approving supervisor

All HOP title pages shall be marked conspicuously with “THIS DOCUMENT CONTAINS HAZARDOUS OPERATIONS PROCEDURES” to alert operators that strict adherence to the procedural steps and safety and health precautions contained within the procedure are required to ensure the safety and health of personnel and equipment. A template for preparing a HOP is shown in Appendix B.

6.3 Medical Surveillance (*29 CFR 1910* and *NASA NPR 1800.1*)

Individuals requiring medical certification to perform HazOps must have the appropriate physical examination according to the NASA NPR **1800.1C**, Appendix C, requirements.

Individuals requiring such exams must contact Occupational Medicine Services to receive directions on scheduling the examination. The content of the exam is dictated by NASA and provided in Appendix C. For those using another medical provider, they must contact the SHED industrial hygienist who will coordinate with Medical Services to provide minimum exam content requirements to that medical provider.

7.0 RECORDS

Original Safety Permit Documentation—Maintained by Safety Committee Chair. Original Safety Permit documentation including the approved Safety Permit(NASA **C–919**), New Safety Permit Request (NASA **C–923**), Safety Permit Renewal Change Request (NASA **C–590**), Qualified Operators List (NASA **C–580**), Safety Permit Hazard Analysis Worksheet (NASA **C–923a**), or facility hazard analysis (FHA) and all related drawings, specifications, procedures, and checklists including written correspondence with the permit requester.

Copies of Safety Permit Documentation—Maintained by SHeD**.** Copies of Safety Permit documentation including the approved Safety Permit (NASA C–919), New Safety Permit Request (NASA C–923), Safety Permit Renewal Change Request (NASA C–590), Qualified Operators List (NASA C–580), and all cancelled or archived safety permits.

HazOps Certifications—Original maintained by supervisors within SATERN

Job Hazard Analysis—Copy of original maintained by Requester and Supervisor

Hazard Assessment—Maintained by Requester and Supervisor

Exposure Assessment—Original Maintained by SHeD

Medical Examinations—Original maintained by Medical Services

Chemical Inventory—Original maintained by SHeD

8.0 REFERENCES

Document number	Document name
NPR 8715.3.C (3.8 and 7.4)	NASA General Safety Program Requirements (7/20/09)
GLM–QSA–1700.1	NASA Glenn Safety Manual, Chapter **33**—Job Hazard Analysis
NPR 1800.1	NASA Procedural Requirement

APPENDIX A.—DEFINITIONS AND ACRONYMS

Authority Having Jurisdiction (AHJ) - The appointed individual at GRC responsible for implementation of the Center's Fire and Life Safety Program.

Engineering controls.—Designing out a hazard at its source by process changes, substitution of less harmful materials, isolation, ventilation, and source modification. Physical controls implemented at the design, installation, or engineering stages (e.g. guards, auto shutoff, etc.).

Facility Hazard Analysis (FHA)- A systematic approach to hazard identification where each system, sub-system, or component is evaluated using a "What If" analysis, a hazard and operability analysis or failure mode effects analysis. A risk index is assigned to each hazard typically before controls are applied and after controls are applied.

Hazardous Operations Procedures (HOP).—A document that shall contain all of the necessary steps needed to control a serious hazard.

Hazardous Operations (HazOps).—Any operation that involves materials or equipment that, if misused or mishandled, has a high potential to result in the following: (1) loss of life, (2) serious injury or illness to personnel, and (3) damage to systems, equipment, or facilities.

Safety and Health Division (SHeD)

Support Service Contractor (SSC)

System for Administration, Training, and Educational Resources for NASA (SATERN)

APPENDIX B— HAZARDOUS OPERATIONS PROCEDURES (HOP) SAMPLE FORMAT

1. Title Page
   - Name of process or procedure
   - Location of procedure: facility or building and room number
   - Revision status and approval date in the upper right hand corner
   - Text box centered in the middle of the title page stating: The following contains Hazardous Operations Procedures. The text box shall have a bright red background and white lettering.
2. Document signature page of required signatures of supervisor
3. Document revision page
4. Description of the hazard and consequences of noncompliance
5. HOP "step-by-step" procedure or checklist
   - The procedure or checklist must begin with a text box centered in the center of the page with wording indicating: "The following steps contain hazardous operations-strict adherence is required" at the beginning of the HOP. The text box will have a bright red background and have white or high contrast lettering that is easy to read.
   - The procedure or detailed checklist must indicate the date and operator's name
   - Each step will be marked with a checkbox or underscore at the beginning of each step for the operator to check off
   - The procedure must end with a text box centered in the page with the wording indicating: "This is the end of the Hazardous Operations Procedure". The text box must have a green background and white or high contract lettering that is easy to read.
   - The procedure or checklist must have a start and stop time.

Contents

1.0 PURPOSE 2
2.0 APPLICABILITY 2
3.0 BACKGROUND 2
4.0 POLICY 2
5.0 RESPONSIBILITIES 2
5.1 Center Director 2
5.2 Chief, Aircraft Operations Office 2
5.3 Aviation Safety Officer 3
5.4 Ground Safety Officer 3
5.5 Pilot in Command 4
5.6 Airworthiness and Configuration Control Manager 4
5.7 Aviation Safety Committee 4
6.0 REQUIREMENTS 4
6.1 General Requirements for GRC Activities Involving Aviation Assets 4
6.2 Proposed Program Approval 4
6.3 Airworthiness and Flight Experiment Reviews 4
6.4 Aviation Safety Program 5
6.5 Configuration Control Plan 5
6.6 Medical Clearance and Physiological Requirements 5
7.0 RECORDS 5
8.0 REFERENCES 5
APPENDIX A.—DEFINITIONS AND ACRONYMS 7

Chapter 12—Aviation Safety

***NOTE:** The current version of this chapter is maintained and approved by the Safety and Health Division (SHeD). The last revision date of this chapter was December 2012. The current version is located on the Glenn Research Center (GRC) intranet at http://smad-ext.grc.nasa.gov/shed/pub/gsm/gsm-manual.pdf. Approved by Chief of Safety and Health Division.*

1.0 PURPOSE

The Glenn Research Center (GRC) Aviation Safety Program (GLM-FA-7900.4) establishes policy, responsibilities, and guidelines, and sets forth procedures and requirements to ensure the safety of personnel and equipment and the safe conduct of aviation functions and activities. This program is tailored to the flight research mission of the GRC Aircraft Operations Office. The GRC Aviation Safety Program follows the guidelines set forth in NASA Procedural Requirement (NPR) 8715.5, NASA Safety Manual Procedures and Guidelines, and the NPR and NASA Procedural Document (NPD) 7900 series as well as other documents referenced in Section **8.0**, References.

2.0 APPLICABILITY

The provisions of this chapter are applicable to all NASA employees and to all other agencies, organizations, and contractor personnel who perform administrative duties or work in an office setting within the confines of the Center at Lewis Field in Cleveland and at the Plum Brook Station in Sandusky.

3.0 BACKGROUND

This chapter is intended to provide basic information concerning aviation safety and is not comprehensive. The Chief, Aircraft Operations Office, the Aviation Safety Officer (ASO), or the Chair of the Aviation Safety Committee (ASC) should be contacted to provide details and resources concerning the comprehensive Aviation Safety Program.

4.0 POLICY

While safety is a concern of every employee it is line management's responsibility to provide a safe working environment. Therefore, the program is tailored to provide the flight organization the tools necessary for continued safety oversight of the associated flight activities. Aircraft operations shall be conducted under the cognizance of the GRC Safety and Mission Assurance Directorate (SMAD), and no aircraft or experiment shall be committed to flight without a valid safety permit or appropriate safety approval. It is the intent of this program to comply with all applicable NASA directives and other governing instructions when applicable.

5.0 RESPONSIBILITIES

The primary responsibility for aviation safety rests with the Center Director and the Flight Operations Manager.

To ensure effective implementation of the GRC Aviation Safety Program, responsibilities and functions are assigned as follows. It is not the intent of this section to be comprehensive but to point out some of the key personnel that can provide further information concerning the program.

5.1 Center Director

The Center Directors are responsible for the safe operation of all aircraft, including unmanned aircraft systems (UASs), assigned to or operating from their centers (NPR 7900.3C, section 1.2.5, Requirement 14). Center Directors will support and maintain an aviation safety program and organization in accordance with this chapter. Center Directors shall ensure that the Center ASO is granted formal access to senior management when safety issues cannot be resolved at a lower level in the flight organization.

5.2 Chief, Aircraft Operations Office

The Center Chief, Aircraft Operations Office, is the senior line manager with authority and responsibility for all flight operations at the Center and is responsible to the Center Director for the safe and effective operation of all aircraft, including UASs (NPR 7900.3C, section 1.2.3, Requirement 33). This is necessary to ensure that aviation management decisions are made only by designated and qualified individuals and to ensure that management actions do not create or contribute to unsafe conditions. In particular, he/she will ensure that the following elements and functions are a part of the Aviation Safety Program:

- A flight operations handbook outlining procedures, requirements, and guidelines for conducting safe flight operations (GRC Aircraft Operations Manual, GLM–FA–7900.2)
- An organization that is actively conducting airworthiness reviews for research aircraft or projects, using multidisciplinary, systems-type approach and functioning independent of line management, and that these reviews are documented (NPR 7900.3C, section 2.2.3, Requirement 81). A configuration control system to ensure real-time monitoring and documentation
- Training for initial checkout and currency requirements; the chief of aircraft maintenance, under the cognizance of management authority, is responsible for maintaining all GRC aircraft and for ensuring compliance with the applicable NASA and industry guidance

5.3 Aviation Safety Officer

While safety is a concern and responsibility of the entire staff, the ASO is the key person in the Safety Program. As such, the ASO is the Center's focal point on flight research (NPR 7900.3C, section 1.2.6.1, Requirement 37). The ASO is the Center's focal point for flight experiment airworthiness. In addition, the ASO is responsible for reviewing and evaluating proposed modifications to the aircraft and experiments to be flown thereon. Also, the ASO is responsible for reviewing flight work orders as required per Research Flight Operations and Airworthiness Procedures Manual (GLP–FA–7900.3). The ASO is also the focal point on flight and ground operating procedures and practices for GRC aircraft, and for reviewing and evaluating flight profiles, operating procedures, training and performance requirements, and any aircraft operating limitations. Mishap response and reporting is another responsibility of the ASO, as well as creating, implementing, and managing the Aviation Safety Program (GLM–FA–7900.4). Although the Chief, Aircraft Operations Office, has direct responsibility for flight safety, should the need arise, the ASO has unrestricted access on matters affecting flight safety to the Safety, Health and Environmental Board chairman and if necessary, the Center Director. In this capacity, the ASO has the authority to shut down any operation or activity in question until an appropriate review can be conducted Duties include (NPR 7900.3C, section 6.3.1, Requirement 474).

Managing an Aviation Safety Program

- Providing operational safety awareness by reviewing safety periodicals and reports from the Federal Aviation Administration (FAA), the National Transportation Safety Board, and military and civilian safety organizations
- Maintaining awareness of FAA and Air Traffic Control procedural changes
- Focal point for flight and ground operating procedures and practices
- Reviewing and evaluating flight profiles, operating procedures, training and performance requirements, and any aircraft operating limitations
- Disseminating information to all pilots concerning safety
- Working in concert with the Aircraft Experiment Manager and/or Airworthiness and Configuration Control Manager (ACCM) when research proposals require operational input
- Reviewing operating procedures and training for GRC aircraft and making recommendations to the Chief, Aircraft Operations Office when necessary
- Reporting and investigation of all aircraft incidents and accidents as well as coordinating the GRC mishap response plan

5.4 Ground Safety Officer

The Ground Safety Officer (GSO) shall assist the ASO in execution of the Aviation Safety Program. Duties include

- Assist in managing the Aviation Safety Program
- Ensure safety meetings are conducted for all maintenance personnel at least once a quarter
- Conduct safety inspections of the facility at least once a quarter
- Serve as primary point of contact for safety when ASO is absent

5.5 Pilot in Command

A GRC aircraft Pilot in Command (PIC) has the final responsibility and authority to ensure the safe operation of the aircraft and the safety of passengers or crewmembers who may be involved in research activities onboard the aircraft.

5.6 Airworthiness and Configuration Control Manager

The ACCM is responsible for coordinating and documenting airworthiness reviews and for maintaining documentation necessary to fully define an aircraft's immediate configuration (Research Flight Operations and Airworthiness Procedures, GLP–FA–7900.3, and the Aircraft Operations Manual, GLM-FA-7900.2).

5.7 Aviation Safety Committee

The ASC, as established in Chapter **1** of the Glenn Safety Manual, reviews operations of and research and development modifications to aircraft operated by GRC, as well as experiments placed on these aircraft. The ASC is the sole authority for recommending the issuance of GRC aircraft and flight experiment safety permits.

6.0 REQUIREMENTS

6.1 General Requirements for GRC Activities Involving Aviation Assets

The requirements of this section are governed by NPR 7900.3C and GRC local manuals. These requirements pertain to all flight activity occurring at GRC's Lewis Field and Plum Brook Station. Any proposed flight activity must be routed through the GRC Aircraft Operations Office and may require a review by the ASC and the issuance of a GRC safety permit. Refer to Research Flight Operations and Airworthiness Procedures, GLP–FA–7900.3, for details of the approval process or contact a representative of GRC aircraft operations.

This requirement is intended to be comprehensive and will include the following when any airborne asset is intended for use:

- Flight test activities
- Airborne research
- Contracts requirements
- Space Act Agreements
- Construction and maintenance
- Remotely controlled aircraft
- Joint projects with other centers or other entities
- Memorandums of Understanding
- Aircraft charter or lease
- NASA equipment intended for use on non-NASA aircraft
- NASA or support service contractors serving as observers or crew members on non-NASA aircraft

6.2 Proposed Program Approval

To enhance safety and ensure management awareness at an early stage, any GRC division proposing an airborne project and flight experiment shall prepare a memorandum detailing the principal objectives and specific requirements of the proposed flight program. The program proposal will be reviewed and accepted or rejected by the flight operations management team. For non-GRC-originated experiments, a Space Act Agreement must be used once the program has been accepted.

6.3 Airworthiness and Flight Experiment Reviews

The purpose of these reviews is to assure management that the risks to persons and property are minimized and that the operational plans for conducting programmatic flights have been approved. Formal review requirements must be commensurate with the significance of the program and the risk involved. The ASC conducts these reviews

independent of line management. This review process is a multidisciplinary, system-like approach that includes appropriate safety analysis and risk assessment. Such reviews are formally conducted and fully documented. They are applicable to all aircraft modifications and flight experiments as per GLP–FA–7900.3.

6.4 Aviation Safety Program

The Aviation Safety Program (GLM–FA–7900.4) is designed to ensure a high level of operational safety awareness in day-to-day aircraft operations among flight and ground crews. It is implemented and managed by the ASO and the GSO. The program will include the following elements as a minimum (NPR 7900.3C, section 6.3.1, Requirement 474):

- Risk assessment and hazard analysis
- Mishap and near mid-air collision reporting and investigating
- Process to create project and program safety plans
- Design reviews, aircraft configuration management, and flight and test readiness reviews
- Training, education, and awareness
- Aviation safety inspections and surveys
- Hazard reporting and investigation

6.4 Review of programmatic safety documentation and safety permit documentation.

6.5 Configuration Control Plan

Configuration control is a vital part of any aviation safety program. The ACCM is responsible for coordinating this plan. A very important aspect of this system is the flight work order document. The process and details of this plan, as well as the flight work order procedures, can be found in Research Flight Operations and Airworthiness Procedures, GLP-FA-7900.3 (NPR 7900.3C, section 2.2.2, Requirement 80), and the Aircraft Operations Manual, GLM–FA–7900.2.

6.5 Review airworthiness documentation related to configuration control and weight and balance.

Medical Clearance and Physiological Requirements

Medical clearance and physiological requirements shall be in accordance with NPR 7900.3C, Chapter 7, and the GRC Aircraft Operations Manual, GLM–FA–7900.2. In general, all GRC pilots are required to obtain FAA first-class medical certificates or military equivalent, annually. Flight crewmembers and research personnel require FAA third-class medical certificates or equivalent medical clearance from the GRC flight examiner. Physiological, egress, and life-support training shall be accomplished as required in the Aircraft Operations Manual. Training and certification records shall be kept in an Aircraft Operations Office file per the GRC Aircraft Operations Manual, GLM–FA 7900.2.

7.0 RECORDS

The Chief, Aircraft Operations Office, will maintain records as per the requirements of NASA Headquarters NPRs, GRC, and organization manuals. Medical clearance records will be maintained by GRC medical staff.

8.0 REFERENCES

Document number	Document name
GLM–FA–7900.2	Aircraft Operations Manual, 1999, NASA Glenn Research Center
GLP–FA–7900.3	Research Flight Operations and Airworthiness Procedures, NASA Glenn Research Center
GLM-FA-7900.4	Aviation Safety Program Manual

NPR 7900.3B	NASA Aircraft Operations Manual
NPR 8715.3B	NASA Safety Manual
NPR 8621.1B	Procedures and Guidelines for Mishap Reporting, Investigating and Record-keeping

APPENDIX A.—DEFINITIONS AND ACRONYMS

Airworthiness and Configuration Control Manager (ACCM)

Aviation Safety Committee (ASC)

Aviation Safety Officer (ASO)

Federal Aviation Administration (FAA)

Glenn Research Center (GRC)

NASA Procedural Document (NPD)

NASA Procedural Requirement (NPR)

Pilot in Command (PIC)

Safety and Health Division (SHeD)

Safety and Mission Assurance Directorate (SMAD)

Unmanned Aircraft System (UAS)

Contents

1.0 PURPOSE....4
2.0 APPLICABILITY....4
3.0 BACKGROUND....4
4.0 POLICY....4
5.0 RESPONSIBILITIES....4
5.1 Safety and Health Division....4
5.2 Supervisors....5
5.3 Employees....5
6.0 REQUIREMENTS....5
6.1 Administrative Policies and Procedures....5
6.1.1 Visitor Information for Machine Shops....5
6.1.2 General Shop Safety Procedures....5
6.2 Policies and Procedures for Environmental Compliance....7
6.2.1 Chemical Storage, Dispensing, and Disposal....7
6.2.2 Waste Management System....7
6.3 Policies and Procedures for Hot Work (Welding, Cutting, etc.)....7
6.3.1 Welding and Cutting....8
6.3.2 Soldering....9
6.4 Policies and Procedures for Compressed Gas Cylinders....9
6.4.1 Cylinder Storage Area....9
6.4.2 Cylinder Use....10
6.4.3 Empty Cylinders....10
6.4.4 Moving Cylinders....10
6.5 Policies and Procedures for Ladders and Scaffolds....11
6.5.1 Ladders—General....11
6.5.2 Fixed Ladders....12
6.5.3 Portable Ladders....12
6.5.4 Stepladders....14
6.5.5 Rolling Scaffolds....15
6.5.6 Scaffold Decks....16
6.6 Policies and Procedures for Metal Fabrication Equipment....18
6.6.1 Bench and Pedestal Grinders....18
6.6.2 Handling and Storing Bonded Abrasive Wheels....19
6.6.3 Beveling Machines....21
6.6.4 Fixture Removal or Installation....22
6.6.5 Mechanical Presses....23
6.6.6 Press Brakes....24
6.6.7 Metal Shear....26
6.6.8 Waterknives....26
6.7 Policies and Procedures for Metal-Working Machines....27
6.7.1 Metal-Working Machines—General....27
6.7.2 Drill Presses....28
6.7.3 Lathes....29
6.7.4 Milling Machines....29
6.8 Policies and Procedures for Nonpowered Hand Tools....30
6.8.1 General Hand Tools....31
6.8.2 Hammers....32
6.8.3 Nonpipe Wrenches....33
6.8.4 Pipe Tools—Wrenches, Cutters, Reamers, and Threaders....34
6.8.5 Pliers and Wire Cutters....35
6.8.6 Screwdrivers....37
6.8.7 Snips....38
6.8.8 Struck Tools—Chisels, Punches, Nail Sets, and Wedges....39

6.8.9 Vises 40
6.8.10 Torque Wrenches 41
6.9 Policies and Procedures for Powered Hand Tools 43
6.9.1 Electrical Tools—General 43
6.9.2 Pneumatic Tools 45
6.9.3 Drills 46
6.9.4 Hand Grinders 48
6.9.5 Magnetic Drills 50
6.9.6 Saws 50
6.9.7 Surface Grinders 54
6.10 Policies and Procedures for Spraying Paint or Combustible Liquids 55
6.10.1 Ventilated Spray Hoods (*29 CFR 1910.107(b)(5)(i)* and *National Fire Protection Association (NFPA) 33*) 55
6.10.2 Ventilated Spray Booths (*29 CFR 1910.107(b)(5)(i)* and *NFPA 33*) 56
6.10.3 Spraying Outside of a Hood or Booth 56
7.0 RECORDS 56
8.0 REFERENCES 56
APPENDIX A.—DEFINITIONS AND ACRONYMS 59

List of Tables

TABLE 6.1.—TYPES OF WELDING LENSES 8

List of Figures

Figure 6.1.—Hazardous Materials Identification System label. 7
Figure 6.2.—Proper cylinder storage. 10
Figure 6.3.—Cylinder trolleys. 10
Figure 6.4—Fixed ladder. 12
Figure 6.5.—Ladder stay in use. 13
Figure 6.6.—Three points of contact. 14
Figure 6.7.—Lock spreader. 15
Figure 6.8.—Keep your knees below the top step. 15
Figure 6.9—Components to inspect on a stepladder. 15
Figure 6.10—Rolling scaffold. 16
Figure 6.11—Framed scaffold. 16
Figure 6.12—Securing scaffold planking, option 1. 17
Figure 6.13.—Securing scaffold planking, option 2. 17
Figure 6.14.—Deformations not permitted in scaffold planking. 18
Figure 6.15.—Proper grinder setup. 18
Figure 6.16.—Dress grinding wheels routinely to keep them sharp and effective. 19
Figure 6.17.—Ring test tapping locations. 20
Figure 6.18.—Anatomy of a pedestal grinder. 20
Figure 6.19.—Tightening sequence. 21
Figure 6.20.—Using C-clamps. 23
Figure 6.21.—The difference between the proper and improper power flow through a standard precision-ground tooling set is obvious. 24
Figure 6.22.—European (a) and standard American (b) press brake tooling are configured differently. American tooling is reversible from a power flow point of view but can lose its center on the die. (c) European tooling performs in the opposite way—reversibility on centers, but mishaps in power flow that are possible if an improper setup is used. 25
Figure 6.23.—Open height on a press brake should be set in a way that ensures the safety of the operator's fingers. 25
Figure 6.24.—Reaching between a punch and die set is one of the most foolish things a press brake operator can do. 25
Figure 6.25.—Holding the workpiece over the top of previous bend is a no-no, as is leaning over a workpiece that is about to be bent, unless you enjoy being slapped in the face by sheet metal. 26

Figure 6.26.—Hammers, punches, chisels, and other tools with mushroomed heads should be discarded and replaced....32
Figure 6.27.—Strike the hammer squarely....32
Figure 6.28.—Hold the hammer with your wrist straight and hand firmly wrapped around the handle....33
Figure 6.29.—Do not strike with the side or cheek of the hammer....33
Figure 6.30.—Do not strike a wrench with a hammer or other object to gain more force....34
Figure 6.31.—Allowing a gap between the back of the hook jaw and the pipe produces maximum gripping force....34
Figure 6.32.—Always pull the wrench towards you....35
Figure 6.33.—Choose pliers that have a grip span of 2.5 to 3.5 in....36
Figure 6.34.—Offset screwdrivers can be used to get into close quarters....37
Figure 6.35.—Pistol grip and ratchet spreaders can give better leverage....38
Figure 6.36.—Select the right snips for the job....38
Figure 6.37.—Hammers, punches, chisels, and other tools with mushroomed heads should be discarded and replaced....39
Figure 6.38.—Tools are available to protect hands....40
Figure 6.39.—The chisel angle must be 70° for hard metals and 60° for soft metals....40
Figure 6.40.—A properly mounted vise....41
Figure 6.41.—Only use dead-front plugs....44
Figure 6.42.—Knots can cause short circuits and shock....45
Figure 6.43.—Tool balancers can greatly reduce fatigue....45
Figure 6.44.—Hold air line away from yourself and others....46
Figure 6.45.—Use quick disconnects of a pressure-release type rather than a disengagement type....46
Figure 6.46.—Compressed air used for cleaning purposes must be reduced to less than 30 psi....46
Figure 6.47.—Ensure that bits and attachments are properly seated and tightened in the chuck....47
Figure 6.48.—Drill components....48
Figure 6.49.—Straight grinder wheel....49
Figure 6.50.—Cup grinder wheel....49
Figure 6.51.—Cone grinder wheel....49
Figure 6.52.—Use suitable adapters to mount depressed center wheels to prevent the wheel from breaking apart....50
Figure 6.53.—Circular saw....52
Figure 6.54.—Use a wedge or guide clamped to the stock to rip lumber with a circular saw....53
Figure 6.55.—Starting an outside cut....54
Figure 6.56.—Starting an inside cut....54

Chapter 14—Shop Safety

NOTE: *The current version of this chapter is maintained and approved by the Safety and Health Division (SHeD). The last revision date of this chapter was July 2012. The current version is located on the Glenn Research Center intranet at http://smad-ext.grc.nasa.gov/shed/pub/gsm/gsm-manual.pdf.*
Approved by Chief of Safety and Health Division.

1.0 PURPOSE

This chapter describes the policies and procedures for working safely in machine and fabrication shops as well as for working with typical machining and metal-forming equipment and tools. This document is intended to be a compilation of several requirements and standards from the Occupational Safety and Health Administration (OSHA) and NASA. It provides practical implementation guidance based on those documents. These policies and procedures protect employees and visitors working in or near shop areas as well as protect hardware and equipment.

This document does not replace safety programs specified by OSHA or NASA; it only acts as a collection of primary information and the practical application of that information.

2.0 APPLICABILITY

The provisions of this chapter are applicable to civil servants, support service contractors, and construction contractors at the NASA Glenn Research Center's (GRC) Lewis Field and Plum Brook Station.

3.0 BACKGROUND

The majority of the jobs in the manufacturing sector are labor intensive. Workers are engaged in the mechanical, physical, or chemical transformation of materials, substances, or components into products. Manufacturing facilities characteristically use power-driven machines and material-handling equipment.

Workers in the manufacturing fields are at risk for illness and injuries because of long hours; changing shifts; contact with machinery and equipment; slips and falls; physical exertion and repetitive motions causing musculoskeletal disorders; hazardous exposure to toxic substances such as heavy metals, organic solvents, dust, isocyanates, chemicals, aerosols, nanoparticles, and carbon monoxide; explosions and structural failures; noise; ototoxicants; and stress.

The Glenn Shop Safety Program establishes the policies, procedures, and responsibilities necessary for the safe operation of machining and fabrication shops.

4.0 POLICY

GRC's safety, health, and environmental professionals shall provide support to Center personnel and operations to assist them in meeting mission goals safely and healthfully. It is GRC policy for all GRC personnel to manage and conduct their operations in such a manner as to eliminate or minimize all potential hazards and to avoid accidents involving injury to personnel, damage to property, or loss of research operating time and effectiveness. In addition, it is GRC policy to eliminate pollution to the atmosphere, ground water, or land and to minimize potential exposure to hazardous materials.

Shop operations, design, fabrication, and assembly shall follow all applicable Federal, State, and local laws; NASA safety, health, and environmental standards and policies; and all recognized professional organizations' "best practices." Although there is no OSHA or NASA requirement for a shop safety program, this document is intended to act as a guidance document and a compilation of requirements including machine guarding and lockout/tagout.

5.0 RESPONSIBILITIES

5.1 Safety and Health Division Professionals

Safety and Health Division (SHeD) professionals are responsible for

- Providing safety and health input on regulatory and best-practice requirements and support shop activities
- Assisting in developing solutions to challenges that provide minimal impact to budget and schedule while meeting requirements

- Working with personnel, projects, and organizations in a team format to meet mission goals

5.2 Supervisors

Supervisors are responsible for

- Supporting SHeD and shop employees in implementing safety and health rules and regulations
- Ensuring that the safety and health policies and procedures established for shop areas and operations are being followed
- Immediately correcting recognized unsafe conditions affecting personnel and facilities under their jurisdiction
- Securing funding to ensure that shop facilities and equipment meet safety and health standards
- Ensuring that all incidents and injuries are reported in NASA's Incident Reporting Information System (IRIS)

5.3 Employees

Employees are responsible for

- Following all safety rules, regulations, and practices
- Maintaining training requirements and only operating equipment that they are qualified to operate
- Informing management of unsafe conditions that need to be addressed
- Immediately reporting all incidents and injuries to their supervisors

6.0 REQUIREMENTS

6.1 Administrative Policies and Procedures

(29 CFR 1910 Subpart I Personal Protective Equipment, 29 CFR 1910 Subpart D Walking-Working Surfaces29 USC 654 (a)…General Duty Clause)

6.1.1 Visitor Information for Machine Shops

We welcome visitors to our shop facilities, and we welcome our visitors to look around and ask questions. We want our visitors to have a safe and enjoyable visit, so we have a few safety procedures that we ask our visitors to follow:

- Visitors should arrive to the facility prepared to walk through a working machining and fabrication environment. This means ankle-length slacks or pants. We respectfully ask that you not wear skirts, shorts, or capris. Please wear closed-toed and closed-heeled shoes. Clogs, sandals, and high heels are not appropriate foot attire.
- Visitors may be asked to wear hard hats, safety glasses, and hearing protection. These items will be provided to visitors by the facility. Visitors must wear these items throughout the duration of their visit.
- Visitors must stay with their escort.
- Visitors are welcome to look all they like but will need to refrain from touching. Some pieces may contain sharp edges or may be hot from welding processes.

6.1.2 General Shop Safety Procedures

6.1.2.1 Securing the Area

- Shop areas must be controlled to prevent unqualified and unauthorized personnel from entering and using equipment.
- Proper signage must be displayed alerting individuals to the hazards and personal protective equipment requirements in the shop.

- Walkways must be marked and used at all times. Walkways must be consistent with emergency evacuation routes and provide visitors a safe path through the shop area.

6.1.2.2 Safety Attire

- Safety glasses with side shields are required throughout all shop areas.
- Safety shoes are required when outside designated walkways.
- Inside walkways, closed-toed and closed-heeled shoes are required.
- Loose clothing, neckties, scarves, and other loose items must not be worn when outside of the designated walkways. Roll sleeves above the elbow to prevent them from being caught in revolving parts.
- Long hair must be secured when anyone is near machinery.
- Loose gloves, rings, watches, necklaces, lanyards, and bracelets must not be worn near machinery.
- Hearing protection must be worn when workers are grinding, torch cutting, operating a water knife, a brake, and other tools where hearing protection is indicated for use.

6.1.2.3 Equipment Inspection

- Always inspect equipment before using.
- Check and adjust all safety devices before each job.
- Ensure that the guards are in position and in good working condition before operating.
- Ensure that all stationary equipment is anchored securely to the floor.
- Ensure that all machines have a start/stop button within easy reach of the operator.
- Have any alterations or major repairs made by a qualified machine repairman.

6.1.2.4 Housekeeping

- Ensure that the area around the machine is free of clutter, debris, and oil to prevent slip and trip hazards.
- Ensure that there is enough room around the machine to do the job safely.
- Ensure that the working surfaces are clean of scraps, tools, and materials.

6.1.2.5 Equipment Operation

Only trained and qualified operators may use equipment. All others must work under the supervision of a journeyman-qualified operator. A journeyman-qualified operator may train others to use a piece of equipment and verify that the person is qualified to operate the equipment using the NASA Glenn Research On-the-Job Training (OJT) form (NASA **C–40**). The form must clearly state the training topics that were discussed and provide verification that the individual understands how to use the equipment accurately and safely.

For safe operation,

- Keep rags, brushes, hands, and other tools away from moving machine parts.
- Avoid awkward operations and hand positions. A sudden slip could cause your hand to move into the cutting tool or blade or contribute to a fall.
- Ensure that machines that are running are attended at all times.
- Use a vacuum, brush, or rake to remove cuttings. Do not handle cuttings by hand.

6.1.2.6 Buddy System

All shops shall follow the “no-one alone system.” As defined in The Glenn Buddy System, Chapter **22** (Section 6.1.4) of the Glenn Safety Manual, the “no-one alone system involves situations in which two or more

persons, not necessarily having the same skills or training, are working in the same area and checking with reasonable frequency on the continuing well-being of each other." Under this system, at least two individuals must be present in the shop together within line of sight and hearing.

6.1 Verification of compliance with these requirements is done by SHeD during periodic evaluation and assessments.

6.2 Policies and Procedures for Environmental Compliance

(29 CFR 1910 Subpart H Hazardous Materials, 29 USC 654 (a)…General Duty Clause)

6.2.1 Chemical Storage, Dispensing, and Disposal

- Chemicals shall be stored in appropriate chemical storage cabinets.
- Dispensing bottles are not permitted to be stored on benches, on roll-around toolboxes, or on equipment.
- All chemicals must be returned before the end of the shift to the appropriate safety cabinet.
- All dispensing bottles must have a legible Hazardous Materials Identification System label affixed to them.

Figure 6.1.—Hazardous Materials Identification System label.

6.2.2 Waste Management System

- All employees shall receive annual training in the appropriate Waste Management Program procedures.
- Used solvent and oil rags must be placed in an oil or solvent rag disposal container at the end of each shift. A solvent and an oily rag disposal container will be provided in each shop area. No items other than solvent and oily rags may be disposed of in these containers. These containers must be emptied nightly into the oily and solvent rag collection drum.
- Sanding disk and grinding wheels must be collected in a separate collection drum. All grinding wheels, sanding wheels, disks, and belts must go into this container. No other waste items may be discarded in this container.
- A scrap metal container should be located within the shop area. These cans must be emptied periodically into the metal dumpster located outside the building to prevent them from overflowing. All scrap metal will be thrown into these containers. Only scrap metal may be discarded into these containers.
- All unwanted chemicals and empty containers need to be discarded through the waste management system. The user must fill out a NASA **C–260a** form so that Waste Management can come and pick up the container.

6.2 Verification of compliance with these requirements is done by SHeD during periodic evaluation and assessments.

6.3 Policies and Procedures for Hot Work (Welding, Cutting, etc.)

(29 CFR 1910 Subpart G, Occupational Health and Environmental Control, 29 CFR 1910 Subpart I Personal Protective Equipment, 29 CFR 1910 Subpart P Hand and Portable Powered Tools and Other

Hand-Held Equipment, 29 CFR 1910 Subpart Q Welding, Cutting, and Brazing, 29 USC 654 (a)…General Duty Clause)

A checklist for conducting a walkthrough and inspection of a hot work setup follows:

- Ensure that a valid Hot Work Authorization Permit is present and complete the Hot Work Pre-Operations Checklist (NASA **C–7a** and **C–7b**).
- Inspect the area for combustible hazards prior to performing hot work.
- Inspect electrical cords and hoses to ensure that they are in a safe condition.
- Connect electrical cords and hoses so that they do not create a trip hazard. If a cord or hose must extend into a pedestrian walkway, take measures to ensure that it is not a trip hazard.
- Ensure that a dedicated fire extinguisher is in the welding/hot work station or on the welding machine. The fire extinguisher cannot be taken from the facility wall.
- Ensure that fire blankets are in the hot work area.
- Ensure that a metal splatter pan is the area for cutting operations.
- Use welding curtains to protect workers in the area from sparks and radiant energy emitted from welding and grinding processes.
- Use a respirator with high-efficiency particulate air (HEPA) filtration during welding and grinding unless otherwise stated by an industrial hygienist.
- Use local exhaust ventilation whenever available and when feasible.

6.3.1 Welding and Cutting

6.3.1.1 Personal Protective Equipment for Welding and Cutting

Don a welding jacket, welding gloves, hearing protection, and a respirator with a HEPA filter. Use welding lenses with the following shade levels:

TABLE 6.1.—TYPES OF WELDING LENSES

Welding lenses	Current, A	Shade level
Shielded metal arc welding	160 to 250	10
Shielded metal arc welding	50 to 500	11
Gas metal arc welding (flux core)	>60	10
Gas tungsten arc welding	50 to 150	8
Gas tungsten arc welding	150 to 500	10
Plasma cutting	300 to 400	9
Plasma cutting	400 to 800	10
Carbon arc gauging	<500	11

- Use welding blankets to protect equipment in the welding area.
- Use welding curtains and shields to protect nearby workers from welding flash.
- Disconnect the electrical cord after use and store it off the floor when finished welding.
- At a minimum, don a welding jacket when performing cutting operations and overhead welding; however, a leather welding jacket is more protective in these operations.

6.3.1.2 Mechanized Welding and Cutting Processes

- Ensure that the track is balanced and secured.
- Ensure that the mechanized welding machine is safely secured to the track.

- Ensure that the mechanized welding machine operator has a positive indication of fall hazards.
- Ensure that the area around the weld zone is free of trip and slip hazards and obstructions to permit the operator free and safe travel with the welder.
- When welding or cutting, do not wear loose clothing, gloves, or jewelry (including rings); and secure long hair.

6.3.1.3 Cutting Processes

- A fire watch, or safety monitor, must be present the entire time that carbon arc gauging or plasma cutting is taking place as well as for at least 30 min after the hot work is completed (refer to NASA **C–7a** and **C–7b** for the required fire watch duration).
- Metal splash pans must be placed under the work zone, and an enclosed barricade must be set up around the work zone. (Fire blankets may ignite.)
- Local exhaust ventilation must be used near the hot work zone during plasma cutting and carbon arc gauging.

6.3.2 Soldering

Soldering flux has the potential to emit formaldehyde. Soldering practices should be done in the presence of a desktop fume extraction device or inside a ventilated hood whenever possible. It is important that employees wash their hands thoroughly after soldering.

6.3 Verification of compliance with these requirements is done by SHeD during periodic evaluation and assessments.

6.4 Policies and Procedures for Compressed Gas Cylinders

(29 CFR 1910 Subpart Q Welding, Cutting, and Brazing, 29 USC 654 (a)…General Duty Clause)

6.4.1 Cylinder Storage Area

- Store cylinders in a clearly identified, dry, well-ventilated storage area away from doorways, walkways, elevators, and stairs.
- Post “no smoking” signs in the area.
- Store cylinders in the upright position and secure with a chain.
- Secure the protective caps.
- Ensure that the area is well ventilated.
- Protect cylinders from contact with the ground, ice, snow, water, salt, corrosion, and high temperatures.
- Store oxygen and fuel gases separately. Indoors, separate oxygen from fuel gas cylinders by at least 20 ft or by a wall at least 1.5 m (5 ft) high with a minimum half-hour fire resistance. Oxyacetylene cylinders may be placed on an undivided cart when in use but cannot be stored on the cart.

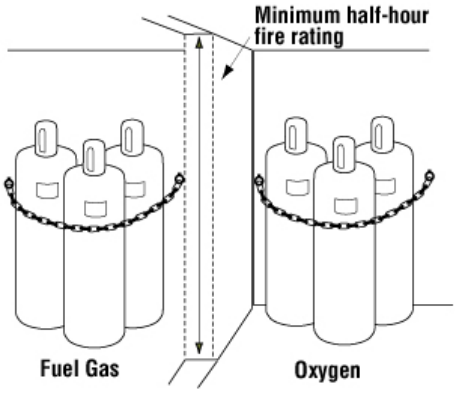

Figure 6.2.—Proper cylinder storage.

6.4.2 Cylinder Use

- Do not fasten cylinders to a work table or to structures where they could become part of an electrical circuit.
- Before attaching the regulator, “crack” a secured cylinder (except hydrogen cylinders) by opening the valve slightly then closing it immediately to blow out dust or dirt from the valve outlet. Use two hands on the valve and stand at the side of the valve—never stand directly in front of or behind the valve outlet.
- Do not crack fuel gases near ignition sources.
- Never crack hydrogen cylinders since released compressed hydrogen may ignite by itself.

6.4.3 Empty Cylinders

- Mark or label an empty cylinder as an “empty cylinder” and store it away from full cylinders.
- Return empty cylinders to the “empties storage area,” where Logistics will pick them up and take them to Building 215 to schedule return to the vendor.
- Remove regulators when not in use and store these away from grease and oil. Put protective caps on the fittings when in storage.
- Keep cylinders and fittings from becoming contaminated with oil, grease, or dust.
- Do not use a cylinder that is not identified or if the label is not legible. The colors of industrial gas cylinders are not standardized.

6.4.4 Moving Cylinders

- Remove the regulator and replace the valve protection cap before moving a cylinder.
- Move cylinders with appropriate trolleys. Cylinders must be secured to the trolley when moving. Use proper lifting cradles.

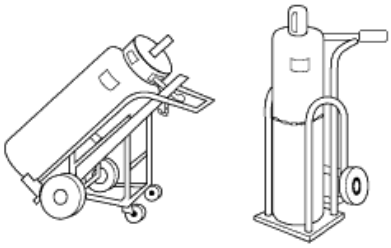

Figure 6.3.—Cylinder trolleys.

- Call Center Dispatch, at 216–433–2088 from Lewis Field or at 419–621–3222 from Plum Brook Station, to remove leaking cylinders. Dispatch will contact Logistics to remove the cylinder.

- Do not lift a cylinder by the valve cap, sling it with ropes or chains, or lift it with electromagnets.
- Do not drag, slide, or drop cylinders. They may be rolled for short distances on their base.
- Never place cylinders on their sides as rollers to move equipment.
- Do not lay acetylene cylinders on their sides. If an acetylene tank has accidentally been left on its side, set it upright for at least 1 hour before it is used.

6.4 Verification of compliance with these requirements is done by SHeD during periodic evaluation and assessments.

6.5 Policies and Procedures for Ladders and Scaffolds

(29 USC 654 (a)…General Duty Clause, 29 CFR 1910 Subpart D Walking-Working Surfaces)

6.5.1 Ladders—General

6.5.1.1 Ladder Inspection

Before each use, check for

- Missing or loose steps or rungs (They are loose if you can move them by hand.)
- Damaged or worn nonslip feet
- Loose nails, screws, bolts, or nuts
- Loose or faulty spreaders, locks, and other metal parts in poor repair
- Rot, decay, or warped rails in wooden ladders
- Cracks and exposed fiberglass in fiberglass ladders
- Cracked, split, worn, or broken rails, braces, steps, or rungs
- Sharp edges on rails and rungs
- Rough or splintered surfaces
- Corrosion, rust, oxidization, and excessive wear, especially on treads
- Twisted or distorted rails (Check ladders for distortion by sighting along the rails. Using a twisted or bowed ladder is hazardous.)
- Missing identification labels

6.5.1.2 Stepladders

Check for

- Wobble
- Loose or bent hinges and hinge spreaders
- Broken stop on a hinge spreader

6.5.1.3 Extension Ladders

Check for

- Loose, broken, or missing extension locks
- Defective locks that do not seat properly when ladder is extended

- Sufficient lubrication of working parts
- Defective cords, chains, and ropes
- Missing or defective pads or sleeves

6.5.1.4 General Care and Maintenance

- Red tag any defective ladders and take them out of service.
- Clean fiberglass ladders every three months.
- Protect wooden ladders with a clear sealer or wood preservative.
- Replace worn or frayed ropes on extension ladders.

6.5.2 Fixed Ladders

6.5.2.1 Fixed Ladder Inspection

Before each use, check for

- Loose, worn, and damaged rungs or side rails
- Damaged or corroded cage
- Corroded guard, bolts, or rivet heads
- Damaged or corroded handrails or brackets on platforms
- Broken or loose anchorages
- Weakened or damaged rungs on brick or concrete slabs
- Defects in climbing devices, including loose or damaged carrier rails or ropes
- Slippery surfaces from oil and ice
- Clutter obstructing the base of the ladder or platform

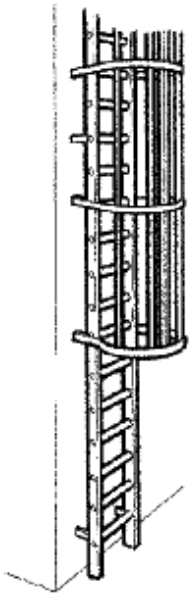

Figure 6.4—Fixed ladder.

6.5.2.2 Fixed Ladders Use

- Wait until the other person has exited before ascending or descending.
- Maintain three-point contact by keeping two hands and one foot, or two feet and one hand on a ladder always.
- Face the ladder and use both hands to grip the rungs firmly.
- Place feet firmly on each rung.
- Wear footwear with heels. Ensure that footwear is in good condition.
- Clean muddy or slippery boot soles before mounting a ladder.
- Raise or lower tools and materials using a handline. Do not carry tools or materials in your hand while climbing. Carry small tools in a tool pouch.
- Check footing before descending a ladder.

6.5.3 Portable Ladders

6.5.3.1 Portable Ladder Use

- Inspect the ladder before and after each use (see Section **6.5.1.1**).
- Get help when handling a heavy or long ladder.

- Keep ladders away from electrical wires.
- Tie off ladders at the top and secure at the bottom to prevent them from slipping. Rest the top of the ladder against a solid surface that can withstand the load. Attach a ladder stay across the back of a ladder if a surface cannot stand the load. Extend the stay across a window for firm support against building walls or a window frame.

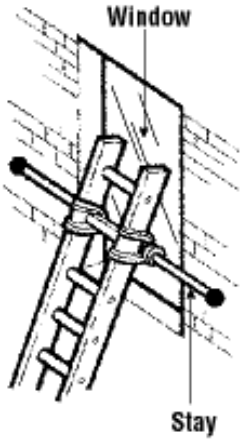

Figure 6.5.—Ladder stay in use.

- Set up barricades and warning signs when using a ladder in a doorway or passageway.
- Before mounting a ladder, clean your boot soles if they are muddy or slippery.
- Avoid climbing with wet soles. Ensure that footwear is in good condition.
- Face the ladder when going up or down and when working from it.
- Keep the center of your body within the side rails.
- Ladders may not be used in a horizontal position as a scaffold plank or runway.
- Hoist materials or attach tools to a belt instead of carrying them by hand.
- Do not work from the top three rungs of a ladder. The higher a person goes on a ladder, the greater the possibility that the ladder will slip out at the base.
- Wooden ladders may not be painted. Defects may be hidden by the paint. Wood preservatives or clear coatings may be used.

6.5.3.2 Portable Ladder Setup

- Place the ladder feet one-fourth of the ladder's working length away from the base of the structure (e.g., for every 4 ft high, the base of the ladder will need to be out 1 ft horizontally from the support point).
- Extend the ladder at least 3 ft above the landing platform.
- Place the ladder on a firm, level footing. Use a ladder with slip-resistant feet or secure blocking, or have someone hold the ladder.
- Rest both side rails on the top support and secure the ladder to prevent slipping.
- Check for overhead electrical wires or other overhead obstructions before setting up a ladder.
- Clear debris, tools, and other objects from the area around the base and top of the ladder.

6.5.3.3 Climbing Portable Ladders

- Tie off yourself with a safety harness when working with both hands.

- Ensure that only one person is on a single-width ladder.
- Maintain three-point contact by keeping two hands and one foot, or two feet and one hand, on the ladder at all times.

Figure 6.6.—Three points of contact.

- Grasp the rungs when climbing a ladder, not the side rails. If your foot slips on a ladder, holding onto the rungs is easier than holding onto the side rails.
- Wear protective footwear with slip-resistant soles and heels.

6.5.4 Stepladders

6.5.4.1 Stepladder Selection

Use a stepladder that is about 1 m (3 ft) shorter than the highest point you have to reach. This gives a wider, more stable base and places shelf at a convenient working height.

6.5.4.2 Stepladder Setup

- Open the stepladder spreaders and shelf fully. Do not climb a stepladder that is leaning against a wall. Use a straight ladder instead.
- Do not use stepladders on slippery surfaces.
- Set the ladder up on solid surfaces. Do not use stepladders on soft ground where one leg may sink farther into the ground than others.
- Ladders shall not be placed on boxes, unstable bases, or on scaffolds to gain additional height.
- Check stability. Ensure that all ladder feet are on a firm, level, and nonslippery surface.
- Place a stepladder at right angles to the work, with either the front or back of the steps facing the work.
- Keep the stepladder close to the work.
- Avoid pushing or pulling stepladders from the side. Repeated sideways movement can make ladders wobbly since they are weaker or less stable in those directions.

Figure 6.7.—Lock spreader.

6.5.4.3 Stepladder Use

- Face the stepladder when climbing up or down. Keep your body centered between the side rails. You have climbed too high if your knees are above the top of the stepladder or if you cannot maintain a handhold on the ladder.
- Maintain a firm grip. Use both hands when climbing.
- Move a stepladder when needed so that you are working within the width of the rails.
- Stepladders may not be used as a brace or as a support for a work platform or plank.

Figure 6.8.—Keep your knees below the top step.

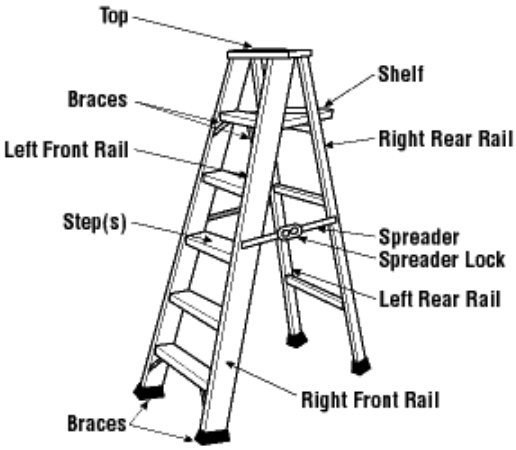

Figure 6.9—Components to inspect on a stepladder.

6.5.5 Rolling Scaffolds

6.5.5.1 Rolling Scaffold Setup

- Assemble the rolling scaffold according to manufacturer's instructions.
- Ensure that the surface on which the scaffold will be moved is level and without holes or obstructions.
- Brace all rolling scaffolds horizontally and diagonally.
- Cleat or secure all planks.
- Prevent joints from separating with a locking mechanism.
- Secure access ladders.
- Ensure that each wheel or castor is equipped with brakes to prevent rolling and swiveling.

- Lock the caster brakes before climbing onto the scaffold.
- Secure or remove all material, equipment, and personnel from platform before moving it.
- Push toward the base when moving the scaffold.
- Install outriggers as directed by the manufacturer.
- Install guardrails. Ensure that the top rail is 30 in. above the platform.
- Toeboards are required when the work platform is over 10 ft high.

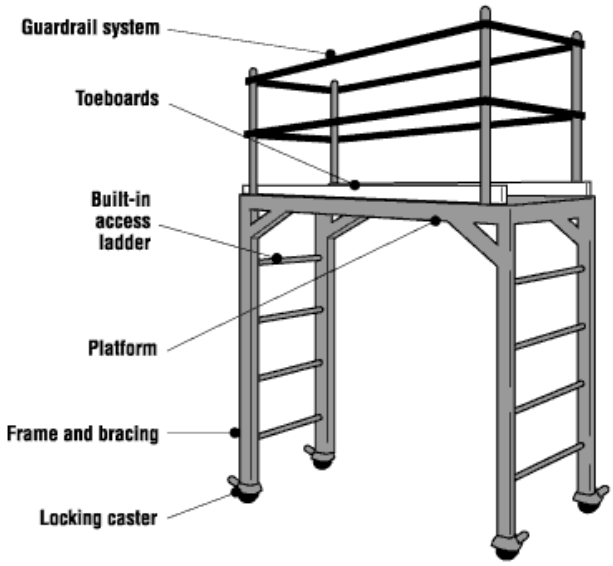

Figure 6.10—Rolling scaffold.

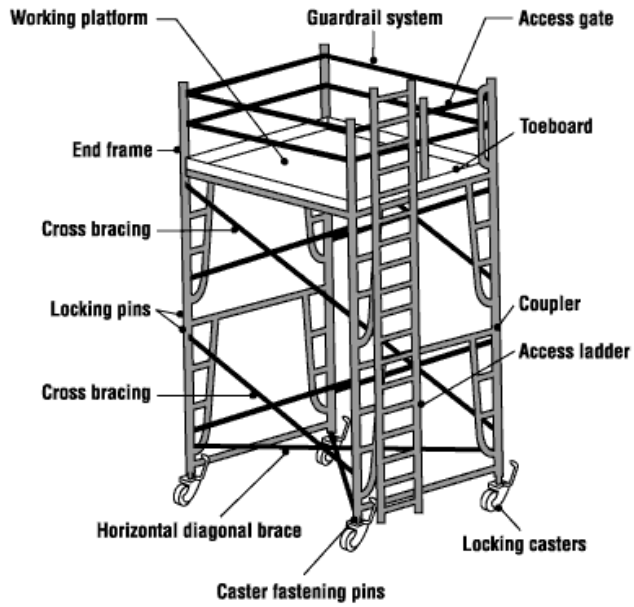

Figure 6.11—Framed scaffold.

6.5.5.2 Rolling Scaffold Use

- Exit the scaffold before it is moved.
- Do not extend adjusting screws more than the manufacturer recommends.
- Do not allow the working platform height to exceed three times the base width, unless it is guyed and equipped with outriggers or otherwise stabilized.
- Protect all planked or working levels with proper guardrails, midrails, and toeboards along all open sides and at the ends of scaffold platforms.

6.5.6 Scaffold Decks

6.5.6.1 Securing Scaffold Planks

- Only cleat planks at the ends to prevent lengthwise movement. Wiring down planks can also prevent movement, provided the wire does not create a tripping hazard.
- Where planks overlap, rest the cleated end on the support.
- To prevent splitting, do not use cleats elsewhere on the plank.
- Ensure that adjoining planks are of uniform thickness for an even platform.
- Lay planks side by side across the full width of the scaffold.

- Check scaffold planks for large knots, worm holes, steeply sloping grain at the edges, spike knots, and splits. Splits that are wider than 3/8 in. lengthwise and closer than 3 in. to the edge of the plank or lengthwise longer than one-fourth the length of the plank are not acceptable. Discard immediately any planks showing these defects or others.
- Regularly check hooks and hardware of prefabricated platform units for looseness, distortion, and cracks. Damage can occur if the platforms are dropped or thrown.
- Clean ice, snow, oil, and grease off planks. Platform decks must be slip resistant and may not accumulate water.
- Inspect planks on a regular basis while on the scaffold. Weather, rot, and general use can deteriorate the planks.
- Do not jump on the planks to test their strength. Jumping can cause undetectable damage.

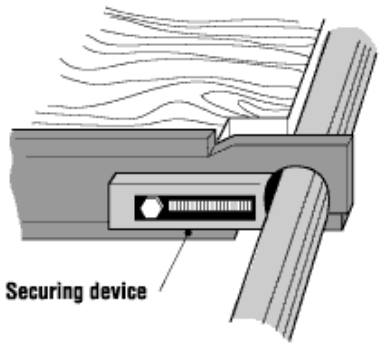

Figure 6.12—Securing scaffold planking, option 1.

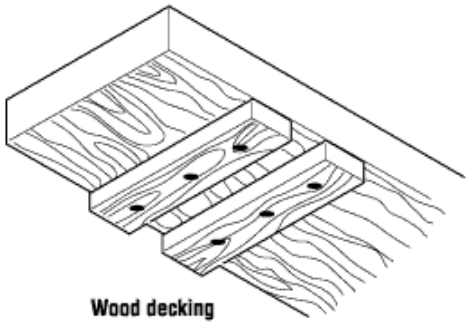

Figure 6.13.—Securing scaffold planking, option 2.

6.5.6.2 Minimum Scaffold Decking Requirements

- Ensure that the deck material is consistent with OSHA 29 Code of Federal Regulations (CFR) 1910.28 requirements.
- Ensure that all working platforms are at least 18 in. wide.
- Use a minimum of 2- by 9-in. number 1 grade spruce-pine-fir planking or better.
- Overlap or extend planking 6 to 12 in. and cleat at each end to prevent it from slipping and blowing off.
- Support planks at intervals not exceeding 10 ft for light work and 7 ft for heavy work (bricklaying or masonry).
- Toeboards (3 1/2 in. high) are required when the working surface is over 10 ft high.

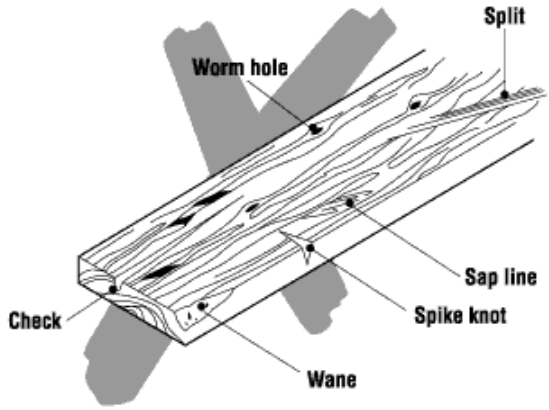

Figure 6.14.—Deformations not permitted in scaffold planking.

6.5 Verification of compliance with these requirements is done by SHeD during periodic evaluation and assessments.

6.6 Policies and Procedures for Metal Fabrication Equipment

(29 CFR 1910 Subpart O Machinery and Machine Guarding, 29 CFR 1910 Subpart P Hand and Portable Powered Tools and Other Hand-Held Equipment, 29 USC 654 (a)…General Duty Clause)

6.6.1 Bench and Pedestal Grinders

6.6.1.1 Bench and Pedestal Grinder Inspection

- Ensure that the pedestal and bench grinders are securely fastened.
- Ensure that all the guards are in place and secure before using a grinder.
- Ensure that the tool rest is adjusted to within 3 mm (1/8 in.) of the wheels. The work rest height must be on the horizontal center line of the machine spindle.
- Maintain 6-mm (1/4-in.) wheel exposure with a tongue guard or a movable guard.
- Ensure that the appropriate wheel is in the grinder for the workpiece and the work. Wheels are made only for grinding certain items. Rough forgings may not be ground on a small precision grinding wheel. Wood, plastics, and non-iron metals cannot be ground with an ordinary wheel.
- Ensure that the grinder speed does not exceed the operating speed marked on the wheel.
- Visually inspect the wheels for possible damage before mounting.

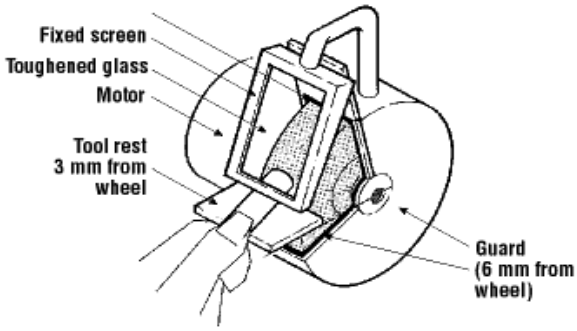

Figure 6.15.—Proper grinder setup.

6.6.1.2 Bench and Pedestal Grinder Use

- Wear safety glasses with side shields and a faceshield.
- Keep the floor around the area free of oil, grease, and clutter that could create a trip or slip hazard.
- Ensure that the working surface is clean of scraps, tools, and materials.
- Ensure that guards are in place and in good working order.
- Do not wear any loose clothing or ties. Roll sleeves above the elbow to prevent them from being caught in revolving parts.
- Secure long hair.
- Do not wear gloves, rings, watches, or bracelets.
- Stand to one side of the grinder until the wheel reaches the operating speed.
- Bring work into contact with the grinding wheel slowly and smoothly, without bumping.
- Apply gradual pressure to allow the wheel to warm up evenly. Use only the pressure required to complete a job.
- Move the work back and forth across the face of the wheel to prevent grooves from forming.
- Dress wheels regularly. Do frequent, light dressings rather than heavy dressings. Support dressing tools to apply leverage without undue effort. With revolving cutter dressing tools, use the lugs as anchors. Replace worn wheels if you cannot dress them.
- Discard a wheel if it has been dropped.
- Do not grind on the side of a regular wheel.

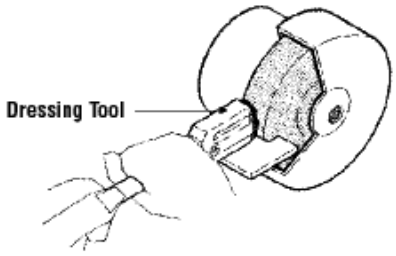

Figure 6.16.—Dress grinding wheels routinely to keep them sharp and effective.

6.6.2 Handling and Storing Bonded Abrasive Wheels

6.6.2.1 Abrasive Wheel Selection

Select the right wheel for the job. It is important for safety. A wheel is dangerous when used for work for which it was not designed.

Use only wheels marked with the type of wheel and maximum speed in revolutions per minute (rpm). Ensure that the mounting equipment is compatible with the wheels rated speed and type.

6.6.2.2 Abrasive Wheel Inspection

Examine the wheel for any signs of damage; then use the “ring test” to check the wheels: Tap the wheels gently with a nonmetallic tool such as a plastic screwdriver handle or wooden mallet. A wheel in good condition will emit a metallic ring. Reject any wheel that sounds dead or cracked.

Ring tests do not apply to wheels with diameters of 10 cm (4 in.) or smaller.

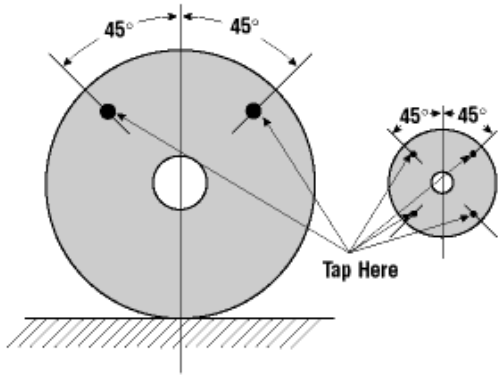

Figure 6.17.—Ring test tapping locations.

6.6.2.3 Wheel Handling and Storing

- Handle wheels carefully. Avoid dropping or bumping.
- Transport wheels in containers designed to provide support for the wheels if they are too heavy to carry by hand.
- Do not pile other items such as tools on top of wheels.
- Store wheels in racks or bins with dividers for different types of wheels.
- Place straight or tapered wheels on end in a cradle or chocked position to prevent rolling.
- Never store wheels near
  - Excessive heat or cold
  - In contact with oil or moisture (liquids can cause balance problems)
  - In drawers with loose tools

6.6.2.4 Mounting Bench and Pedestal Abrasive Wheels

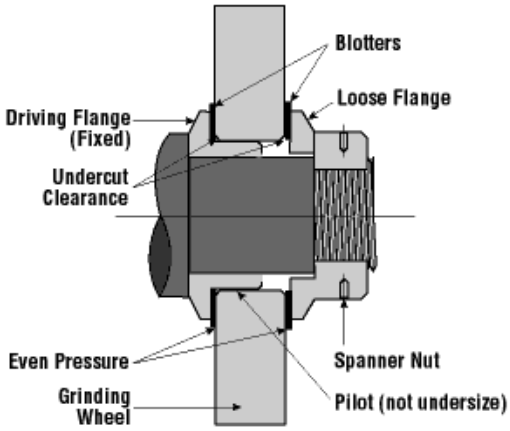

Figure 6.18.—Anatomy of a pedestal grinder.

6.6.2.4.1 Wheel Selection

Ensure that you have the correct type and size wheel for the machine by checking the markings on both. The machine spindle speed must not be greater than the speed marked on the wheel.

6.6.2.4.2 Wheel Inspection

- Examine the wheel for cracks or chips; then perform the ring test:

  Tap the wheel gently with a nonmetallic tool such as a plastic screwdriver handle or wooden mallet. A wheel in good condition will emit a metallic ring. Reject any wheel that sounds dead or cracked. Replace the wheel, if faulty.

- Maintain even pressure from both flanges against the sides of the wheel. Check flanges with a straight edge. Worn or warped flanges must not be used.
- Check the surface of the abrasive wheel and flanges to ensure that no particles are present.

6.6.2.4.3 Wheel Mounting

- Do not force a wheel onto the machine spindle or change the size of the mounting hole.
- Maintain a clearance (undercut relief) of at least 3 mm (1/8 in.) to prevent pressure on the wheel near the hole.
- Use paper blotters between the wheel and the flanges to take up slight wheel surface roughness.
- Ensure that the mounting pilot(s) is rounded with a length of about two-thirds of the width of the wheel.
- Extend the threaded section well inside the loose flange.
- Tighten the grinding wheels just enough to prevent them from slipping. Overtightening the spindle nuts or clamping screws can damage the wheel and grinder parts. With multiple screw-mounting flanges, tighten the bolts uniformly. Start by barely tightening a screw, “snug-up” the opposite screw and, in a crisscross manner, continue until all mounting screws are uniformly tight.
- Place the threads of the central spindle in the direction that will cause the nut to tighten from the force of the work being done.
- Replace all guards.
- Before turning on the power, the operator should turn the wheel by hand to check for appropriate wheel clearance.
- Warn all persons to stay clear of the area where the wheel is used.
- Stand to one side and test the wheel. Start and run the wheel for at least 1 min. If any undue vibration occurs, switch off the wheel immediately and make adjustments.

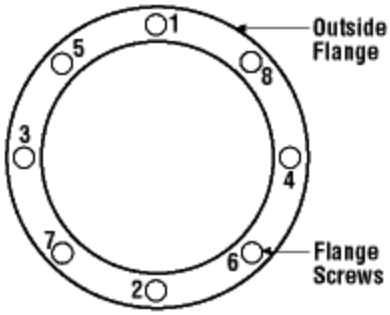

Figure 6.19.—Tightening sequence.

6.6.3 Beveling Machines

- Inspect the electrical cords and cables to ensure that they are in a safe condition.
- Connect electrical cords and hoses in a manner that does not create a trip hazard. If the cord or hose must extend into a pedestrian walkway, measures must be taken prevent a trip hazard.
- Ensure that the beveller has received proper servicing.

- Ensure that the guards are secured and in place around the feed and cutting areas.
- Ensure that the plate is balanced and secured prior to beveling.
- Ensure that the area around the plate is free of trip and slip hazards and obstructions to permit the operator free and safe travel with the beveller.
- Don safety glasses with side shields, a faceshield, and tight-fitting leather or cut-resistant gloves.
- Do not wear loose clothing or gloves.
- Do not wear jewelry (including rings).
- Secure long hair.
- Ensure that the beveler is unplugged when cutter bits are being changed.

6.6.4 Fixture Removal or Installation

- Keep fixtures secured during the entire process of removing fixtures or hardware.
- Keep fixtures secured during the entire process of installing fixtures or hardware.
- Keep the floor around the area free of oil, grease, and clutter that could create a trip or slip hazard.
- Ensure that the working surface is clean of scraps, tools, and materials.
- Ensure that guards are in place and in good working order.
- Do not wear any loose clothing or ties. Roll sleeves above the elbow to prevent them from being caught in revolving parts.
- Secure long hair.
- Do not wear gloves, rings, watches, or bracelets.
- Secure fixtures by any number of methods, including c-clamps, bar clamps, pipe clamps, handscrews, bull dogs, grasshoppers, cranes, mechanical hoists, and other means and methods traditionally used in a fabrication environment.
- Ensure that the attachment and the components can withstand the weight of the fixture and hardware as well as any forces that could be imparted from the fixture slipping.
- Select the clamp size and style on the basis of the holding requirements of the job and the following clamp features:
  - Strength and weight (e.g., consider rail size and nominal clamping pressure)
  - Opening (length of reach)
  - Throat depth (depth of reach)
  - Ease of adjustment
  - Clamping surfaces (material used and size)
- Dispose of clamps with bent frames and spindles.
- Ensure that the pressure plate and anvil parts of the clamp are in full contact with the workpiece before tightening them.
- Use pads with C-clamps to avoid marking the work.
- Remove clamps as soon as the job is finished. Clamps serve only as temporary devices for holding work securely in place.
- Keep all moving parts of clamps lightly oiled and keep tools clean to prevent slippage.

- Ensure that there is no dirt or oil on any part that will come in contact with the work.
- Use deep-throat clamps instead of oversize clamps that have deep throats due to their larger overall size.
- Hand tighten clamps unless they were designed to be tightened with tools.
- Do not use C-clamps for lifting.

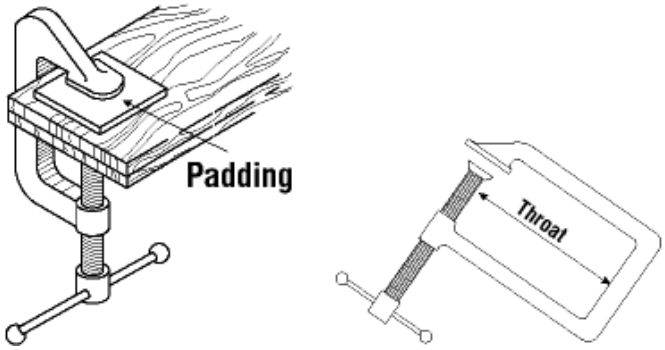

Figure 6.20.—Using C-clamps.

6.6.5 Mechanical Presses

6.6.5.1 Press Inspection

- Check the vise for cracks or other damage before clamping a workpiece in it.
- Ensure that all threaded and moving parts are clean, oiled, and free of chips and dirt.
- Inspect the pads for cracks and damage. Take cracked and damaged devices out of service by placing a tag on them.
- Do not use damaged presses. Presses may not be repaired by welding or brazing.

6.6.5.2 Press Use

- Wear safety glasses with side shields when using striking tools or power tools on a workpiece held by a press.
- Keep the floor around the area free of oil, grease, and clutter that could create a trip or slip hazard.
- Ensure that the working surface is clean of scraps, tools, and materials.
- Ensure that guards are in place and in good working order.
- Do not wear any loose clothing or ties. Roll sleeves above the elbow to prevent them from being caught in revolving parts.
- Secure long hair.
- Do not wear gloves, rings, watches, or bracelets.
- Load and set up the press in a secure manner with the material centered with the press.
- Support the end of extra-long work with an adjustable stand, saw horse, or box rather than putting extra strain on the press and work piece.
- Do not apply heavy pressure at the corner of the press pads.
- Do not use a handle extension (e.g., a pipe) for extra clamping pressure.
- Do not hammer on the handle to tighten beyond hand pressure.
- Do not use the pads of the vise as an anvil.

6.6.6 Press Brakes

6.6.6.1 Press Brake Tooling Installation

Before any tooling can be installed, the ram must be locked in the shut height position, with the ram in its most extended position. Once the press is locked into that position, the tooling can be slid safely into the press.

Not all tooling can be loaded universally into the press brake; many tools can be loaded correctly only one way. The best way to know if you have installed tooling correctly is to look at the tooling from the end and check where the flow of power is (see Fig. 6.21).

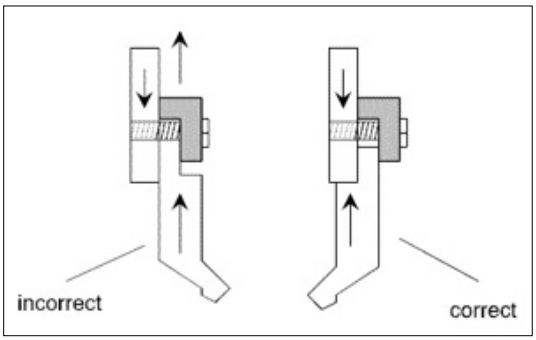

Figure 6.21.—The difference between the proper and improper power flow through a standard precision-ground tooling set is obvious.

Before installing any tooling, check for previous damage that may cause trouble and clean the machine and the tools. Check to make sure that the tooling angles match correctly for the type of forming that you are attempting. Take special care to ensure that the total applied tonnage does not exceed the abilities of the tooling.

6.6.6.2 Press Brake Use

- Ensure that the stops are able to flip out of the way in time.
- Ensure that the ram opens far enough to get the formed piece out of the press.
- Ensure that the back gauge is not going to crash into the tooling.

Conduct a dry-run of the forming program and the press before using any material. This should always be done before starting any job.

When two or more people are working together on the same press brake, only one may be designated as the operator. This duty may never be shared. The operator in charge of the brake must make certain that coworkers are clear of the press before beginning the bending process.

Never apply any pressure on the back gauge—just a light touch is necessary to produce a good part. Pushing against the back gauge with force puts the operator in the position of leaning into the machine.

Setting the open height of the brake correctly is critical (see Fig. 6.22). If you can place your finger between the punch and die, they are too far apart and you could lose a finger. If the open height is set the correct way, there is no chance of losing a finger. For situations that require the open height to be greater than normal practice allows, set the open height to allow only the material to slide between the punch and die.

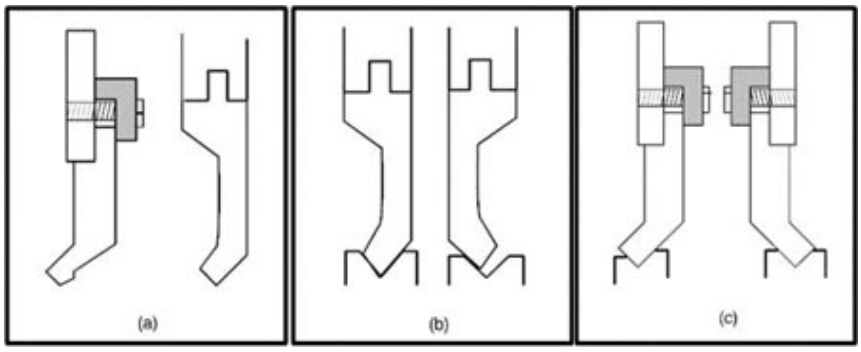

Figure 6.22.—European (a) and standard American (b) press brake tooling are configured differently. American tooling is reversible from a power flow point of view but can lose its center on the die. (c) European tooling performs in the opposite way—reversibility on centers, but mishaps in power flow that are possible if an improper setup is used.

Always use caution when reaching behind tooling. Make sure the back gauge is in position. If the back gauge moves while your hand is there, you can catch your fingers in the tooling.

When operating a flywheel-driven (mechanical) press brake, pay very close attention to drift. If the ram is not brought back up to or past top dead center, chances are good that it will drift back down the wrong way before the clutch reengages. Not knowing where the ram is in relationship to the stroke is the single most common reason for the loss of fingers and limbs among press brake operators.

Remember, with a flywheel-driven press brake, there is no way to reverse the stroke. If you are caught, the stroke has to be completed, regardless of whether or not fingers or hands are in the way.

Always reach around or walk behind the press brake (see Fig. 6.24). Never reach between the punch and die sets for any reason. If you happen to get your hand caught in the brake, it can splinter a finger bone all the way down to the marrow.

Figure 6.23.—Open height on a press brake should be set in a way that ensures the safety of the operator's fingers.

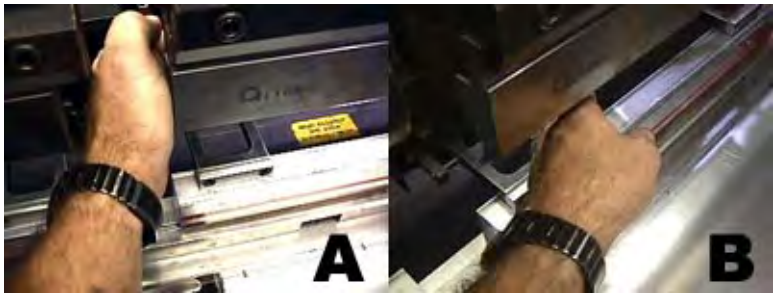

Figure 6.24.—Reaching between a punch and die set is one of the most foolish things a press brake operator can do.

6.6.6.3 Press Brake Safety Tips

The following are some tips for avoiding serious injury while operating a press brake:

- Never put any part of your body between the punch and die. Never let your fingers or other body parts come between your workpiece and the machine. Never hold your workpiece over the top of a previous bend. Keep your face and upper body out of the way for workpiece movement. This will keep you from getting slapped (see Fig. 6.25).
- Do not sit in front of a press brake—you may not be able to move out of the way quickly enough in an emergency.
- Never interrupt someone or allow yourself to be interrupted when operating a press brake.
- Except in an emergency, never try to back a workpiece out of the slip roll while the rollers are still clamped into place. The workpiece is still being rolled regardless of the direction of the roll. This causes the radius to vary for the distance that was traveled by the roller, only in reverse.
- Should it become necessary to remove a workpiece from the slip roller before the work cycle is complete, lift the top roll and remove the piece. Make all the necessary adjustments; then return the workpiece to complete the rolling.

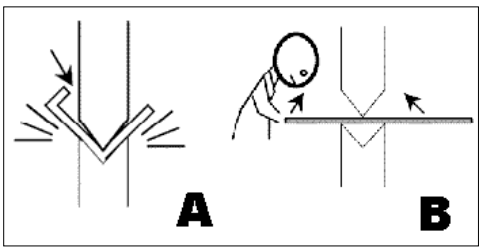

Figure 6.25.—Holding the workpiece over the top of previous bend is a no-no, as is leaning over a workpiece that is about to be bent, unless you enjoy being slapped in the face by sheet metal.

6.6.7 Metal Shear

- Wear safety glasses with side shields and hearing protection.
- Keep the floor around the area free of oil, grease, and clutter that could create a trip or slip hazard.
- Ensure that the working surface is clean of scraps, tools, and materials.
- Ensure that guards are in place and in good working order.
- Do not wear any loose clothing or ties. Roll sleeves above the elbow to prevent them from being caught in revolving parts.
- Secure long hair.
- Do not wear gloves, rings, watches, or bracelets.
- Ensure that the shear is rated to cut the gauge of sheet metal that you are working with, or you may damage the blade. The gauge rating of a shear is generally marked prominently on the machine.
- Place sheet stock on the table, and slide it below the shield.
- Ensure that no one’s feet are below the treadle.
- Ensure that no one is behind the shear.
- Sound the horn before shearing.

6.6.8 Waterknives

6.6.8.1 Waterknife Use

- Load garnet into the waterknife using ergonomically sound and healthful methods.

- Ensure that the proper servicing schedule is being followed for the nozzle and that the nozzle does not need to be replaced.
- When removing cut pieces from the waterknife for inspection, stop the cutting action and tag out the control panel.
- Don hearing protection and safety glasses with sideshields while attending the waterknife unless a sound-level survey determines otherwise.
- Keep the floor around the area free of oil, grease, and clutter that could create a trip or slip hazard.
- Ensure that the working surface is clean of scraps, tools, and materials.
- Ensure that guards are in place and in good working order.
- Do not wear any loose clothing or ties. Roll sleeves above the elbow to prevent them from being caught in revolving parts.
- Secure long hair.
- Do not wear gloves, rings, watches, or bracelets.

6.6.8.2 Crane Support for Waterknives

Attach the necessary hardware to the metal to permit removal from the waterknife without relying on magnets. Small parts can be removed from parent material in the waterknife with magnets.

6.6 Verification of compliance with these requirements is done by SHeD during periodic evaluation and assessments.

6.7 Policies and Procedures for Metal-Working Machines

(29 CFR 1910 Subpart O Machinery and Machine Guarding, 29 CFR 1910 Subpart P Hand and Portable Powered Tools and Other Hand-Held Equipment, 29 USC 654 (a)…General Duty Clause)

6.7.1 Metal-Working Machines—General

6.7.1.1 Metal-Working Machine Setup

- Wear safety glasses with sideshields.
- Check and adjust all safety devices before each job.
- Ensure that the guards are in position and in good working condition before operating.
- Ensure that all stationary equipment is anchored securely to the floor.
- Ensure that all machines have a start/stop button within easy reach of the operator.
- Ensure that keys and adjusting wrenches have been removed from the machine before turning on the power.
- Provide a convenient tool rack.
- Ensure that all cutting tools and blades are clean and sharp. They must be able to cut freely without being forced.
- Ensure that the area around the machine is free of clutter, debris, and oil to prevent trip hazards.
- Ensure that there is enough room around the machine to do the job safely.
- Ensure that the working surfaces are clean of scraps, tools, and materials.
- Do not wear any loose clothing or ties. Roll sleeves above the elbow to prevent them from being caught in revolving parts.

- Secure long hair.
- Do not wear gloves, rings, watches, or bracelets.

6.7.1.2 Metal-Working Machine Use

- Stop the machine before measuring, cleaning, or making adjustments.
- Use a vacuum, brush, or rake to remove cuttings. Do not handle cuttings by hand.
- Keep hands away from the cutting head and all moving parts.
- Avoid awkward operations and hand positions. A sudden slip could cause your hand to move into the cutting tool or blade.
- Each machine should have only one operator at one time.
- Machines must be attended at all times.
- Shut down power and bleed residual energy following lockout/tagout procedures before trying to free a stalled cutter. See Chapter **9** of the Glenn Safety Manual for more information on lockout/tagout.
- Keep rags away from the moving parts of machines.

6.7.1.3 Postmachining Tasks

Clean all tools, and return all portable tooling to their proper storage place after use.

6.7.2 Drill Presses

6.7.2.1 Drill Press Setup

- Wear appropriate safety glasses with side shields.
- Ensure that the drill press has a start/stop button within easy reach of the operator.
- Ensure that drill bits are clean and sharp. Dull drills are a common cause of breakage.
- Keep the floor around the drill press free of oil, grease, and clutter that could create a trip or slip hazard.
- Ensure that the working surface is clean of scraps, tools, and materials.
- Ensure that guards are in place and in good working order.
- Do not wear any loose clothing or ties. Roll sleeves above the elbow to prevent them from being caught in revolving parts.
- Secure long hair.
- Do not wear gloves, rings, watches, or bracelets while working with a drill press.
- Remove the chuck key from the chuck.

6.7.2.2 Drill Press Use

- Use a vacuum, brush, or rake to remove cuttings.
- Remove burrs and chips from a drilled hole. When making deep holes, clean out the hole frequently.
- Use a strap, clamp, or drill-press vise to prevent work from spinning or from being pulled up away from the work-holding device, which would then allow the workpiece to spin.
- Lubricate the drill bit when drilling metal to prevent chips and the drill bit from being caught in the workpiece.
- Use the appropriate drill designed for the workpiece material. For example, brass drills for brass, plastic drills for plastics, and so forth.

- Reduce the drilling pressure when the drill begins to break through the workpiece. This action prevents the drill from pulling into the work and breaking.
- Adjust speeds and measure work once the machine has completely stopped.
- Keep hands away from under the stock while it is being drilled.
- Do not use your hand to stop the chuck and spindle from rotating.
- Drill presses must be attended at all times while running.

6.7.3 Lathes

6.7.3.1 Lathe Setup

- Wear appropriate safety glasses with side shields.
- Ensure that the lathe has a start/stop button within easy reach of the operator.
- Follow job specifications for the speed, feed, and depth of cut for the materials being turned.
- Ensure that all work runs true and centered.
- Center the workpiece deeply enough to provide support for the piece while it is turning.
- Use a lifting device to handle heavy chucks or work.
- Inspect chucks for wear or damage. Flying pieces can be very dangerous.
- Remove the chuck wrench immediately after adjusting the chuck.
- Use a barrier guard when operating the lathe in the semiautomatic or automatic mode.
- Remove all tools, measuring instruments, and other objects from the saddle or lathe bed before starting the machine.
- Ensure that the chip and coolant shields are in place.
- Ensure that the floor around the lathe is free of oil, grease, and clutter that could create a trip or slip hazard.
- Ensure that the working surface clean of scraps, tools, and materials.

6.7.3.2 Lathe Use

- Shut off the power supply to the motor before mounting or removing accessories.
- Stop the lathe before taking measurements of any kind.
- Use a vacuum, brush, or rake to remove cuttings only after the lathe has stopped moving.
- Do not leave lathe operations unattended.

6.7.4 Milling Machines

6.7.4.1 Mill Setup

- Wear appropriate safety glasses with side shields.
- Remove gloves, rings, watches, and loose clothing. Tie back long hair.
- Ensure that the floor around the mill is free of oil, grease, and clutter that could create a trip or slip hazard.
- Ensure that the working surface is clean of scraps, tools, and materials.
- Ensure that the milling machine has a start/stop button within easy reach of the operator.
- Before starting, make sure that
  - All guards are in place.

  - Work is properly secured in place and mounted squarely.
  - Bolts used to hold down work clear the tooling.
  - Tooling and supporting pieces are properly tightened in position.
  - Table stops are secured properly.
  - Handles on all feed screws are in neutral.
  - Table is free of stock, tools, or other loose material.
  - The arbor and arbor support are clear of the work.
- Mount work in a vise that is bolted or held magnetically to the table.
- Wear gloves when handling milling cutters to avoid being cut when handling them.
- Move table as far as possible from the cutter while setting up work to avoid injuring your hands.
- Ensure that the following factors are considered when setting cutting speed:
  - Material to be machined
  - Type of cutter
  - Finish required
  - Depth of cut
  - Rigidity of machine and workpiece

6.7.4.2 Mill Use

- Keep hands, brushes, and rags away from the revolving milling cutter.
- Use a vacuum, brush, or rake to remove cuttings only after the cutters have stopped moving.
- Change cutting compounds periodically.
- Keep cutters sharpened correctly and in good condition.
- Keep working surface clear of scraps, tools, and materials.
- Use lifting equipment when appropriate to move heavy work to or from milling machines.
- Wait until cutter is completely stopped to mount, measure, or adjust work.
- Do not use an excessively heavy cut or feed as it can cause the cutter to break. The flying pieces could cause serious injury.
- Do not reach over or near a revolving cutter. Keep hands at least 12 in. from a revolving cutter.
- Do not lean or rest hands on a moving table.
- Wait until the machine stops running to make adjustments.
- Only move the operating levers if you know what they control and what action is going to take place.
- Attend the machine the entire time that it is running.

6.7 Verification of compliance with these requirements is done by SHeD during periodic evaluation and assessments.

6.8 Policies and Procedures for Non-powered Hand Tools

(29 CFR 1910 Subpart P Hand and Portable Powered Tools and Other Hand-Held Equipment, 29 USC 654 (a)…General Duty Clause)

6.8.1 General Hand Tools

6.8.1.1 Hand Tool Selection

Select the right tool for the job. Substitutes increase the chance of having an accident. Tools will only be used for tasks they were designed for. For example, do not use a slot screw driver as a chisel, pry bar, wedge, or punch or use wrenches as hammers.

Use tools designed to allow your wrist to stay straight. Avoid using hand tools with your wrist bent.

6.8.1.2 Hand Tool Inspection

- Inspect tools for defects before use. Replace or repair defective tools.
- Replace cracked, splintered, or broken handles on files, hammers, screwdrivers, or sledges; or discard the tool. Do not use damaged tools.
- Ensure that the handles of tools like hammers and axes fit tightly into the head of the tool.
- Replace wrenches, pipe tools, and pliers with worn jaws.
- Discard any hammer with a mushroomed or chipped face or with cracks in the claw or eye sections.

6.8.1.3 Hand Tool Storage

- Keep cutting tools sharp. Cover sharp edges with a suitable covering to protect the tool and to prevent injuries from unintended contact.
- Lay pointed and sharp tools (e.g., saws, chisels, and knives) with the sharp edges pointed away from walkways.
- Ensure that tool handles do not extend over the edge of the bench top.
- Do not leave tools unsecured on the upper levels of ladders and hardware where they could fall onto someone below.
- Return tools to their proper storage location at the end of the shift.

6.8.1.4 Hand Tool Use

- Use wrenches and pliers for pulling but not for pushing.
- Tether tools when you are working on upper levels. Areas below the work zone must be barricaded. Persons working below must wear hard hats.
- Keep the work environment clean and tidy to avoid clutter that could cause accidents and to remove additional risks in the event of a fall.
- Use a heavy belt or apron and hang tools at your sides, not behind your back.
- Do not apply excessive force or pressure on tools. This increases the risk of slipping and personal injury or damage to hardware.
- Cut away from yourself when using cutting tools.
- Do not hold a workpiece in the palm of your hand when using a cutting tool or a screwdriver.
- Wear tight-fitting work gloves when using hand tools.
- When handing a tool to another worker, present it handle first.
- Carry tools in a way that does not interfere with using both hands on a ladder, while climbing on a structure, or when doing any hazardous work. When working on a ladder or scaffold, raise or lower tools using a bucket and hand line or other means that allows safe climbing.

6.8.2 Hammers

6.8.2.1 Hammer Selection

- Select a hammer that is comfortable for you and that is the proper size and weight for the job.
- Select a hammer that is appropriate for the material. Misuse can cause the striking face to chip, possibly causing a serious injury.
- Choose a hammer with a striking face diameter approximately 0.5 in. larger than the face of the tool being struck (e.g., chisels, punches, wedges, etc.).

6.8.2.2 Hammer Inspection

- Ensure that the head of the hammer is firmly attached to the handle.
- Replace loose, cracked, or splintered handles or dispose of the hammer.
- Discard any hammer with a mushroomed or chipped face or with cracks in the claw or eye sections.
- Do not redress, grind, weld, or reheat-treat a hammer head.

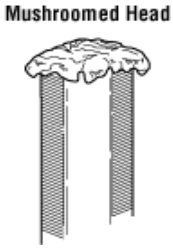

Figure 6.26.—Hammers, punches, chisels, and other tools with mushroomed heads should be discarded and replaced.

6.8.2.3 Hammer Use

- Wear safety glasses with side shields when using a hammer.
- Strike a hammer blow squarely with the striking face parallel to the surface being struck. Always avoid glancing blows and over and under strikes. (Hammers with beveled faces are less likely to chip or spall.)
- Look behind and above you before swinging the hammer to ensure no persons or obstacles are in the swing radius.
- Hold the hammer with your wrist straight and your hand firmly wrapped around the handle.
- Do not strike with the side or cheek of the hammer.

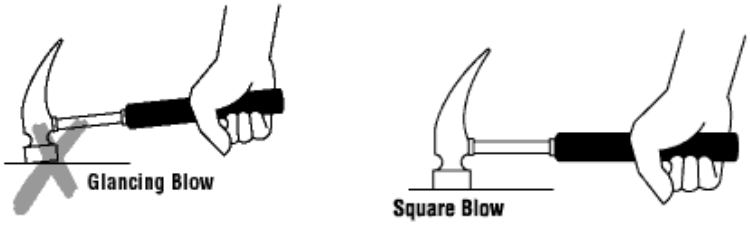

Figure 6.27.—Strike the hammer squarely.

Figure 6.28.—Hold the hammer with your wrist straight and hand firmly wrapped around the handle.

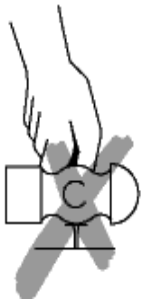

Figure 6.29.—Do not strike with the side or cheek of the hammer.

6.8.3 Nonpipe Wrenches

6.8.3.1 Nonpipe Wrench Selection

- Select the correct wrench for the job:
  - Pipe wrenches for pipes, plumbing, and fittings
  - General-use wrenches for nuts and bolts
- Do not insert a shim in a wrench for a better fit.
- Select the correct jaw size to avoid slippage.
- Select a box or socket wrench with a straight handle, rather than an offset handle, when possible.

6.8.3.2 Nonpipe Wrench Inspection

- Inspect open-ended wrenches for distorted jaws and box wrenches for broken or damaged points. Discard any damaged wrenches.
- Ensure that the teeth of a pipe wrench are sharp and free of oil and debris and that the pipe or fitting is clean to prevent unexpected slippage and possible injuries.

6.8.3.3 Nonpipe Wrench Use

- Position your body in a way that will prevent you from losing balance and hurting yourself if the wrench slips or something (e.g., a bolt) suddenly breaks.
- Ensure that the jaw of an open-ended wrench is in full contact (fully seated, “flat,” not tilted) with the nut or bolt before applying pressure.
- When turning an adjustable wrench, the direction of the turn should be against (toward) the permanent jaw.
- Apply a small amount of pressure to a ratchet wrench initially to ensure that the ratchet wheel (or gear) is engaged with the pawl (a catch fitting in the gear) for the direction toward which you are applying pressure.
- Support the head of the ratchet wrench when socket extensions are used.
- Pull on a wrench using a slow, steady pull; do not use fast, jerky movements.
- Ensure that adjustable wrenches do not “slide” open during use.
- When using a wrench, pull it toward you. You are more likely to lose your balance if the wrench slips when you are pushing it. Do not use a wrench that has a bent handle or is damaged.
- Do not strike a wrench (except a “strike face” wrench) with a hammer, or similar object, to gain more force.
- Do not increase the leverage by adding sleeved additions (e.g., a pipe) to increase tool handle length.

- Do not expose a wrench to excessive heat (like from a blow torch) that could affect the temper of the metal.

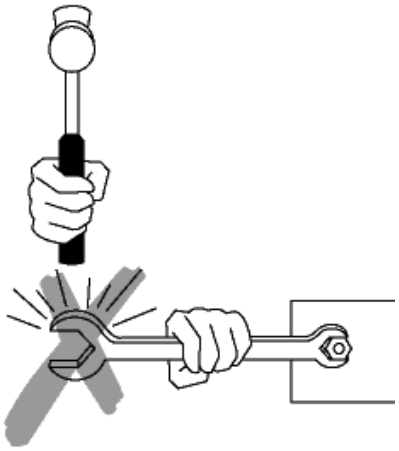

Figure 6.30.—Do not strike a wrench with a hammer or other object to gain more force.

6.8.4 Pipe Tools—Wrenches, Cutters, Reamers, and Threaders

6.8.4.1 Pipe Wrench Selection

- Select a pipe wrench with sufficient capacity and leverage to do the job. The wrench must be large enough to allow a gap between the jaw hook and the back of the throat.
- Always use tools for the purpose they were intended. Use a pipe wrench to turn or hold a pipe.
  - Never use a pipe wrench to bend, raise, or lift a pipe.
  - Never use a pipe wrench as a hammer.
  - Never strike a pipe wrench with a hammer.
  - Never use pipe wrenches on nuts and bolts.

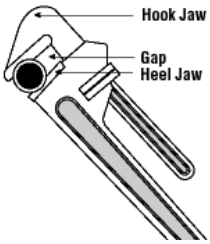

Figure 6.31.—Allowing a gap between the back of the hook jaw and the pipe produces maximum gripping force.

6.8.4.2 Pipe Wrench Inspection

- Inspect pipe wrenches periodically for worn or unsafe parts and replace them (e.g., check for worn threads on the adjustment ring and movable jaw).
- Keep pipe wrench teeth clean and sharp.

6.8.4.3 Pipe Wrench Use

- Adjust the pipe wrench grip to maintain a gap between the back of the hook jaw and the pipe. This concentrates the pressure at the jaw teeth, producing the maximum gripping force. It also aids the ratcheting action.

- Face a pipe wrench forward. Turn the wrench so that the pressure is against the heel jaw.
- Pull, rather than push, on the pipe wrench handle. Maintain a proper stance with your feet firmly placed to hold your balance.
- Do not use a pipe extender for extra leverage. Get a larger pipe wrench.

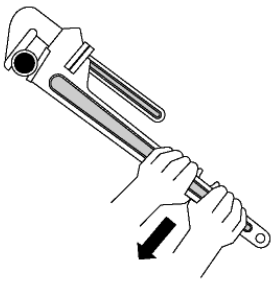

Figure 6.32.—Always pull the wrench towards you.

6.8.4.4 Cutter, Reamer, and Threader Selection

- Choose a cutting wheel suitable for cutting the type of pipe material required:
  - Thin wheel for cutting ordinary steel pipe
  - Stout wheel for cutting cast iron
  - Other wheels for cutting stainless steel, plastic, and other materials
- Select the proper hole diameter and correct tap size to tap a hole. The hole must be sized so that the thread cut by the tap will be about 75 percent as deep as the thread on the tap.
- Use a proper tap wrench (with a “T” handle) for turning a tap.

6.8.4.5 Cutter, Reamer, and Threader Inspection

Replace pipe cutter wheels that are nicked or otherwise damaged.

6.8.4.6 Cutter, Reamer, and Threader Use

- Use a three- or four-wheeled cutter if there is not enough space to swing a single-wheel pipe cutter completely around the pipe.
- Use lubricant or machine cutting fluid with metals other than cast iron.
- Remove chips to prevent flutes (grooves in the tap that allow metal chips to escape from the hole) from getting clogged). The chips may prevent the tap from turning, and the tap may break if you continue to apply pressure.
- Do not use a conventional adjustable wrench for turning a tap; it will cause uneven pressure on the tap that may cause it to break.
- Do not thread any rod or other cylindrical object that is larger in diameter than the major diameter of the die thread.
- A spiral reamer cannot be used on a rotating pipe. The reamer may snag and cause serious injury.

6.8.5 Pliers and Wire Cutters

6.8.5.1 Pliers and Wire Cutter Selection

- Select the correct tool for the job. Pliers are made in various shapes and sizes and for many uses. Some are used for gripping something round like a pipe or rod, some are used for twisting wires, and others are

designed to be used for a combination of tasks including cutting wire. There are also tools that are used just for cutting wires (as opposed to wire cable and rope).

- Choose pliers or wire cutters that have a grip span of 2 1/2 to 3 1/2 in. to prevent your palm or fingers from being pinched when the tools are closed.
- Select adjustable pliers that allow you to grip the workpiece firmly while maintaining a comfortable handgrip (i.e., hand grasp is not too wide).

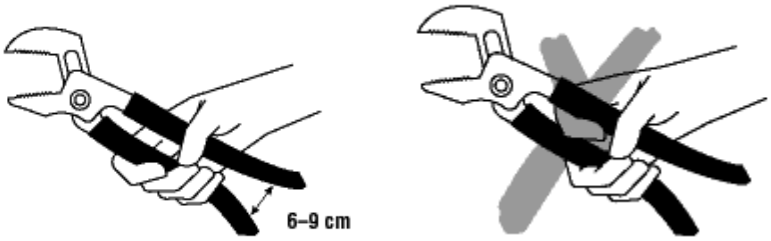

Figure 6.33.—Choose pliers that have a grip span of 2.5 to 3.5 in.

6.8.5.2 Pliers and Wire Cutter Inspection

- Ensure that the cutting edges are sharp. Tools with dull and worn cutting edges require many times more force for cutting than do tools with sharp edges.
- Ensure that the toothed jaws are clean and sharp. Greasy or worn down jaws can compromise safety. Such tools also require increased force to hold the workpiece which, in turn, increases the risk of muscular fatigue and repetitive strain injuries.

6.8.5.3 Pliers and Wire Cutter Use

- Wear safety glasses with side shields to protect your eyes from flying particles, pieces of wire, and other hazards.
- Cut at right angles. Never rock a cutting tool from side to side or bend a wire back and forth against the cutting edges.
- Oil pliers and wire cutters regularly. A drop of oil on the hinge will make the tools easier to use.
- Pull on the pliers; do not push away from you when applying pressure. If the tools slips unexpectedly, you may lose your balance or hit your hand against equipment or something else hard that could result in an injury.
- Do not use cutters on hardened wire unless the pliers or wire cutters are specifically manufactured for this purpose.
- Keep pliers and wire cutters away from welding operations and excessive heat.
- Do not bend stiff wire with light pliers. Needle-nose pliers can be damaged by using the tips to bend large wire.
- Do not use pliers as a hammer, and do not use hammers on pliers or cutters to cut wires or bolts.
- Do not use tools with cushion-grip handles for jobs requiring tools with electrically insulated handles. Cushion grips are for comfort primarily and do not protect against electric shock.
- Do not use pliers on nuts and bolts; use a wrench instead.

6.8.6 Screwdrivers

6.8.6.1 Screwdriver Selection

- Choose contoured handles that fit the shank tightly, with a flange to keep your hand from slipping off the tool.
- Select a slot screwdriver with a blade tip width that is the same as the width of the slotted screw head.
- For cross-head screws, select the correct size and type of screwdriver: a Phillips screwdriver may slip out of a screw head designed for use with the slightly flatter tipped Pozidriv screwdriver.
- Select a head size that is the same width as the screw.

6.8.6.2 Screwdriver Inspection

- Clean the screwdriver handle. A greasy handle could cause an injury or damage the hardware from unexpected slippage.
- Ensure that the tips are square and not rounded or with damaged edges.
- Ensure the handle is not broken and the shaft is not bent. Remove damaged tools from service

6.8.6.3 Screwdriver Use

- Use a vise or clamp to hold the stock if the piece is small or moves easily. Do not hold the stock in one hand while using the screwdriver with the other. If the screwdriver slips out of the slot you may cut your hand.
- Shut off electricity before beginning work on electrical equipment (lock out, deenergize, and tag out).
- Use a screw-holding screwdriver (with screw-holding clips or magnetic blades) to get screws started in awkward, hard-to-reach areas.
- Use an offset screwdriver in close quarters where a conventional screwdriver cannot be used (see Figure 6.34).

Figure 6.34.—Offset screwdrivers can be used to get into close quarters.

- Use a screwdriver that incorporates the following features when continuous work is needed:
  - A pistol grip to provide for a straighter wrist and better leverage
  - A “Yankee drill” mechanism (spiral ratchet screwdriver or push screwdriver) that rotates the blade when the tool is pushed forward
  - A ratchet device to drive hard-to-move screws efficiently
  - A powered screwdriver
- File a rounded tip square making sure that the edges are straight. A dull or rounded tip can slip out of the slot and cause hand injury or damage to materials.
- Store screwdrivers in a rack or partitioned pouch so that the proper screwdriver can be selected quickly.
- Do not lean or push on a screwdriver with any more force than necessary to keep contact with the screw. A screw properly piloted and fitted will draw itself into the right position when turned. Keep the shank directly over the screw being driven.
- Do not use a screwdriver to pry, punch, chisel, score, scrape, or stir paint.

- Keep screwdriver blades away from excessive heat. Heat can affect the temper of the metal and weaken the tool.
- Do not carry screwdrivers in your pockets. If you fall, the blade could cause injury.

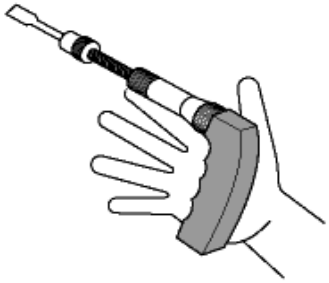

Figure 6.35.—Pistol grip and ratchet spreaders can give better leverage.

6.8.7 Snips

6.8.7.1 Snips Selection

Select the right size and type of snips for the job; check the manufacturer's specifications about the intended use of the snips (e.g., type of cut—straight, wide curve, tight curve, right or left, and maximum thickness and kind of metal or other material that can be cut).

- Snips for cutting straight lines
- Snips for cutting curves to the left or curves to the right
- Universal snips, for cutting both straight lines and wide curves
- Straight snips and duckbill snips (flat blade, "perpendicular" to the handle, with pointed tips) for cutting straight lines; some duckbill snips for cutting curved lines
- Hawk's bill snips (with crescent-shaped jaws) for cutting tight circles
- Aviation snips with compound leverage to reduce the effort required for cutting
- Offset snips with jaws that are set at an angle from the handle to enable you to keep your hands safely above the cut while cutting directly through the center of a large sheet

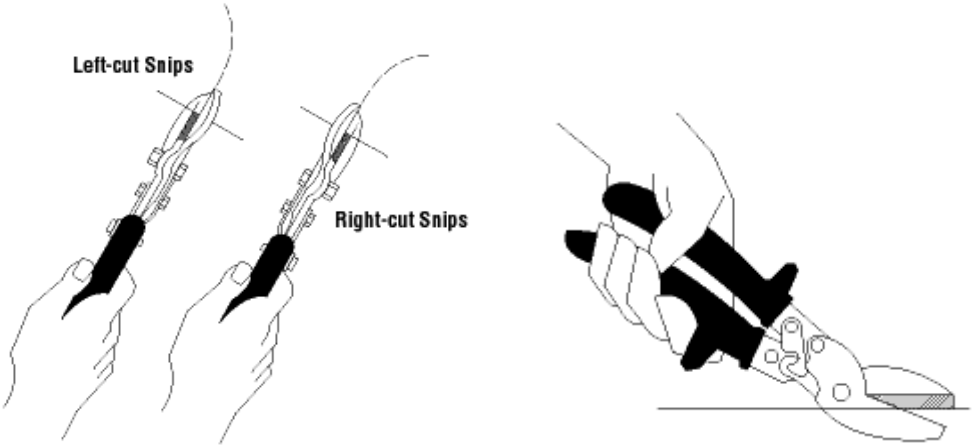

Figure 6.36.—Select the right snips for the job.

6.8.7.2 Snips Inspection

Ensure that the snips are sharp and in good condition and that the nut and the pivot bolt are properly adjusted at all times.

6.8.7.3 Snips Use

- Wear protective gloves and safety glasses with side shields when working with snips. Small pieces of metal may go flying in the air.
- Use snips for cutting soft metal only. Hard or hardened metal must be cut with cutting tools designed for that purpose.
- Use ordinary hand pressure for cutting. If extra force is needed, use a larger tool. Do not extend the length of handles to gain greater leverage.
- Cut so that the waste is on the right if you are right-handed or on the left if you are left-handed.
- Avoid springing the blades. This results from trying to cut metal that is too thick or heavy for the snips you are using.
- Oil the pivot bolt on the snips occasionally.

6.8.8 Struck Tools—Chisels, Punches, Nail Sets, and Wedges

6.8.8.1 Struck Tool Selection

Struck tools are made in various shapes and sizes and for many uses and include cold chisels, punches, nail sets, rock and star drills, and wedges. Use the correct tool for the job.

6.8.8.2 Struck Tool Inspection

- Ensure that the tools are good condition before use (i.e., cutting edges are sharp and the struck head is not mushroomed or chipped).
- Discard tools that are bent, cracked, or chipped.
- Discard and replace hammers, punches, chisels, and other tools with mushroomed heads.

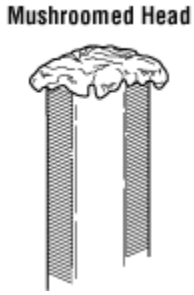

Figure 6.37.—Hammers, punches, chisels, and other tools with mushroomed heads should be discarded and replaced.

6.8.8.3 Struck Tool Use

- Wear gloves and safety glasses with side shields.
- For shearing and chipping, hold the chisel at an angle that permits the bevel of the cutting edge to lie flat against the shearing plane.
- Use hand protection whenever possible. There are various methods possible:

  - Force a sponge rubber shield onto the shaft of a chisel.
  - Use a struck tool that comes with a hand protector designed for the tool.
  - Use a punch or chisel holder.

- Do not use cold chisels to cut or split stone or concrete.
- Do not use a drift pin punch (also called an aligning punch) to drive, remove, or loosen pins, keys, and rivets.
- When using a bull-point chisel, use tongs or a chisel holder to guide the chisel to prevent injury to the hand holding the chisel.

6.8.8.4 Sharpening and Redressing Tools

- Redress the points and cutting edges to their original shape. Grind to a slightly convex cutting edge. The point angle of the chisel must be 70° for hard metals, 60° for soft.
- Do not apply too much pressure to the head when grinding a chisel. The heat generated can remove the temper.
- Immerse the chisel in cold water periodically when grinding.

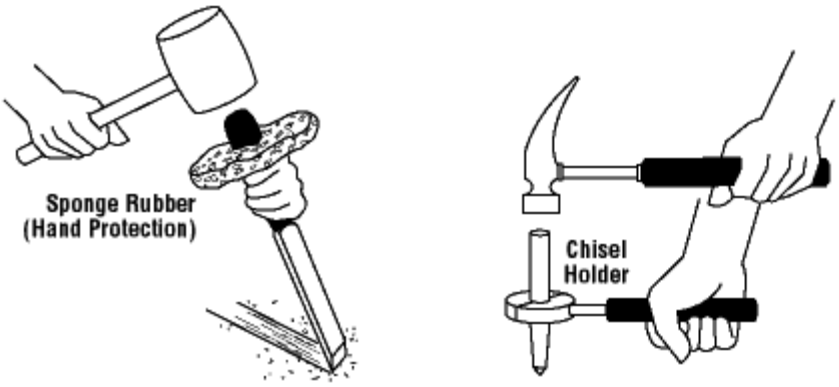

Figure 6.38.—Tools are available to protect hands.

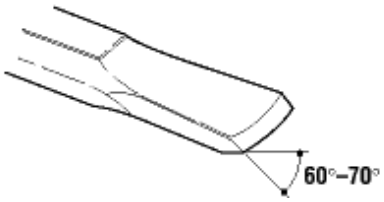

Figure 6.39.—The chisel angle must be 70° for hard metals and 60° for soft metals.

6.8.9 Vises

6.8.9.1 Vise Selection

Use a vise large enough to hold the work without strain.

6.8.9.2 Vise Inspection

- Check the vise for cracks or other damage before clamping a workpiece in it.
- Ensure that all threaded and moving parts are clean, oiled, and free of chips and dirt.
- Replace any bent handles and worn jaw inserts.
- Inspect the vise for cracks. Take cracked vises out of service and replace them.

- Do not use damaged vises. Vises cannot be repaired by welding or brazing.

6.8.9.3 Vise Use

- Wear safety glasses with side shields when using striking tools or power tools on a workpiece held by a vise.
- Place the workpiece in the vise so that the full clamping surface of the jaw supports the workpiece.
- Use jaw liners in a vise if there is any possibility of marking the work.
- Keep the workpiece in the vise close as possible to the jaws to prevent vibration when sawing, filing, and other operations.
- Support the end of extra long work with an adjustable stand, saw horse, or box rather than putting extra strain on the vise.
- Do not try to bend a heavy rod in a light vise.
- Do not cut into the jaws.
- Do not apply heavy pressure at the corner of the vise jaws.
- Do not use a handle extension (e.g., a pipe) for extra clamping pressure.
- Do not hammer on the handle to tighten beyond hand pressure.
- Do not use the jaws of the vise as an anvil.

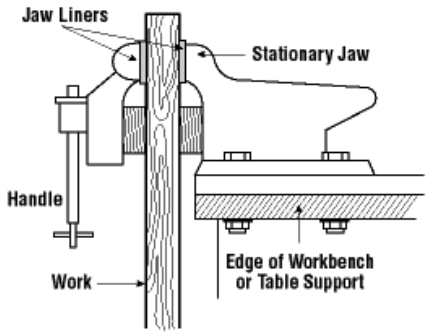

Figure 6.40.—A properly mounted vise.

6.8.9.4 Securing a Vise

- Attach a vise securely to a stable surface such as a bench top. Place bolts in all the holes in the base of the vise, and use lock washers under the nuts. (Vises cannot be welded).
- Ensure that the workbench is firmly secured to its base.
- Mount the vise so that the stationary jaw projects slightly beyond the edge of the workbench. This allows long work to be clamped in the vise without interference from the edge of the workbench.

6.8.10 Torque Wrenches

All torqueing operations must be accompanied by a written instruction that is either in a standalone document or on a drawing. The written instruction must include information on torque values and contain the tightening sequence and specify either nonlubricated threads or the lubricant for the threads. The instructions must clearly define the conditions for which the torque values were selected.

The design engineer will specify the proper lubricant if one is to be used (such as a specific antiseizing compound that may be required to prevent galling of thread materials in high-temperature applications) and the torque value that applies when this compound is used.

When torque values are specified in the written instruction, a calibrated torque wrench shall be used to tighten the fastener. On defined critical assemblies, torque-calibrated impact or nut-runner wrenches shall not be substituted for a precision torque wrench.

Coating the mating surfaces of joints is not permitted. All joints are to be assembled uncoated, clean and dry, metal-to-metal (except nonmetallic gasket designs).

Torque value specifications are required for all critical fasteners, such as rotating couplings, pressure joints, and components subject to high-speed or high-load vibration, high temperature, or severe temperature variation.

The written instruction will need to contain the following information:

- Size, type, fit, and plating of threads
- Materials of the joined fastener and pieces
- Whether washers are to be used and, if so, whether they are hardened or plain
- Whether threads are to be dry or lubricated and, if lubricated, what lubrication is to be used
- The tightening sequence to be used (if applicable)
- Whether a nut or a bolt is to be used

Before torqueing a fastener, verify that

- Components of both the fasteners and the joint are as specified

  Components of the joint and the fastener are clean—no coating on the mating surfaces of the joint; no paint on the face of nuts or bolt heads; and no burrs, grit, or dirt on threads—not just “as received”
- During the rundown of the fastener to the snug position, the turning effort shall match the specified fit (If a Class-2 fit (free-running fit) is specified, the assembler will need to be able to easily finger-turn the fasteners during rundown.)
- The torque units of the instruction match those of the wrench
- The wrench is within calibration

The use of an adapter or extension on a torque wrench will result in a greater torque application than indicated by the dial or setting. Thus, when an adapter or extension is used, the torque reading or setting must be determined as follows:

$$\text{Torque reading or setting} = \frac{\text{specified torque (actual)} \times \text{length of wrench}}{\text{(length of effective + wrench + extension)}}$$

- Do not attempt to use a torque wrench to tighten a fastener to a higher value than the maximum value shown on the torque wrench indicator or setting.
- Fully install sockets on the nut or bolt. Maintaining a slight inload (force holding toward the fastener) on the tool will lessen the chances of damage to the fastener.
- Never jerk a torque wrench. Force must be applied slowly to obtain an accurate indication of the torque being applied to the fastener.
- Take torque readings only while tightening the fastener. Do not over tighten and then loosen to the desired torque value.
- Ensure that all torque wrenches are calibrated by authorized personnel at least annually to compensate for wear. The wrenches shall be identified by serial number and tagged with the calibration date; they shall not be used after the void date shown on the wrench. In order to ensure that all wrenches are available for annual calibration, each one is to be returned to the tool crib at the end of each shift.

6.8 Verification of compliance with these requirements is done by SHeD during periodic evaluation and assessments.

- Do not keep torque wrenches in tool boxes, supply cabinets, and similar containers.
- Recalibrate the wrench if it is dropped. (In general, dial or click types are not as durable as beam memory torque wrenches.)
- When the torque specification calls for the use of a torque-calibrated impact or nut-runner wrench, take care to ensure the proper preparation of the air (clean, dry, well-controlled pressure, and proper lubrication) before it enters the pneumatic tool.

6.9 Policies and Procedures for Powered Hand Tools

(29 CFR 1910 Subpart O Machinery and Machine Guarding, 29 CFR 1910 Subpart P Hand and Portable Powered Tools and Other Hand-Held Equipment, 29 USC 654 (a)…General Duty Clause)

6.9.1 Electrical Tools—General

6.9.1.1 Electrical Tool Inspection

- Inspect tools for any damage prior to each use.
- Check the handle and body casing of the tool for cracks or other damage.
- If the tool has auxiliary or double handles, check to see that they are installed securely.
- Inspect cords for defects; check the power cord for cracking, fraying, and other signs of wear or faults in the cord insulation.
- Check for damaged switches and for ones with faulty trigger locks.
- Inspect the plug for cracks and for missing, loose, or faulty prongs.
- If a tool is defective, remove it from service, and tag it clearly “Out of service for repair.”
- Replace damaged equipment immediately; do not use defective tools temporarily.
- Ensure that you have been properly trained to use the tool safely. Read the operator’s manual before using the tool, and operate the tool according to the manufacturer’ instructions. Use only tested and approved tools.
- Ensure that the power tool has the correct guard, shield, or other attachment that the manufacturer recommends.
- Prevent shocks. Ensure that the tools are properly grounded using a three-prong plug, are double-insulated (and are labeled as such), or are powered by a low-voltage isolation transformer; this will protect users from an electrical shock.
- Check electric tools to ensure that a tool with a three-prong plug has an approved three-wire cord and is grounded. The three-prong plug must be plugged in a properly grounded three-pole outlet. If an adapter must be used to accommodate a two-hole receptacle, the adapter wire must be attached to a known, functioning ground. NEVER remove the third (grounding) prong from a plug.
- Replace open front plugs with dead-front plugs. Dead-front plugs are sealed and present less danger of shock or short circuit.
- Never break off the third prong on a plug; replace broken three-prong plugs, and ensure that the third prong is properly grounded.

Figure 6.41.—Only use dead-front plugs.

6.9.1.2 Battery-Powered Tools

- Use only the kind of battery that the tool manufacturer specifies for the battery-powered tool that you are using.
- Recharge a battery-powered tool only with a charger that is specifically intended for the battery in that tool.
- Remove the battery from the tool or ensure that the tool is switched off or locked off before changing accessories, making adjustments, or storing the tool.
- Store a battery pack safely so that no metal parts, nails, screws, wrenches, and so on can come in contact with the battery terminals; this could result in shorting the battery and possibly cause sparks, fires, or burns.

6.9.1.3 Electrical Tool Use

- Wear safety glasses with side shields.
- Remove gloves, rings, watches, and loose clothing.
- Tie back long hair.
- Ensure that the floor around the area is free of oil, grease, and clutter that could create a trip or slip hazard.
- Ensure that the working surface is clean of scraps, tools, and materials.
- Switch off the tools before connecting them to a power supply.
- If a power cord feels more than comfortably warm or if a tool is sparking, have it checked by an electrician.
- Disconnect the power supply before making adjustments or changing accessories.
- Remove any wrenches and adjusting tools before turning on a tool.
- During use, keep power cords clear of tools and the path that the tool will take.
- Use clamps, a vise, or other devices to hold and support the piece being worked on, when practical to do so. This will allow you to use both hands for better control of the tool and will help prevent injuries if a tool jams or binds in a workpiece.
- Use only approved extension cords that have the proper wire size (gauge) for the length of cord and power requirements of the electric tool that you are using. This will prevent the cord from overheating.
- Secure power cords that extend into walkways or work areas to eliminate tripping hazards.
- Ensure that cutting tools, drill bits, and other tools are kept sharp, clean, and well maintained.
- Wait for the tool to completely stop running before setting it down.
- Always unplug a tool before walking away from it.
- Only use electric tools in dry conditions unless the tool is connected to a ground fault circuit interrupter (GFCI).
- Stop using an electric power tool if you feel a tingle in your fingers. This is a warning that the tool is faulty and needs repair.
- Do not connect or splice extension cords together to make a longer connection; the resulting extension cord may not be able to provide sufficient current or power safely.

- Carry electrical tools by the handle, not by the power cord.
- Do not tie power cords in knots. Knots can cause short circuits and shocks. Loop the cords or use a twist-lock plug.
- Extension cords cannot be used as permanent wiring; use extension cords only as a temporary power supply to an area that does not have a power outlet. All extension cords must be grounded and have GFCI protection.
- Do not walk on or allow vehicles or other moving equipment to pass over unprotected power cords. Cords must be put in conduits or protected by placing planks on each side of them.
- Do not surprise or touch anyone who is operating a tool. Startling a tool operator could cause an accident or injury.

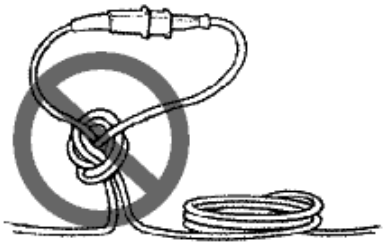

Figure 6.42.—Knots can cause short circuits and shock.

6.9.2 Pneumatic Tools

- Wear safety glasses with side shields or a face shield and, where necessary, safety shoes or boots and hearing protection.
- Remove gloves, rings, watches, and loose clothing.
- Tie back long hair.
- Ensure that the floor around the area is free of oil, grease, and clutter that could create a trip or slip hazard.
- Ensure that the working surface is clean of scraps, tools, and materials.
- Ensure that the compressed air supplied to the tool is clean and dry. Dust, moisture, and corrosive fumes can damage a tool. An in-line regulator filter and lubricator increases tool life.
- Keep tools clean and lubricated, and maintain them according to the manufacturers' instructions.
- Use only the attachments that the manufacturer recommends for the that tools you are using.
- Be careful to prevent hands, feet, or body from injury in case the machine slips or the tool breaks.
- Reduce physical fatigue by supporting heavy tools with a counter-balance wherever possible.

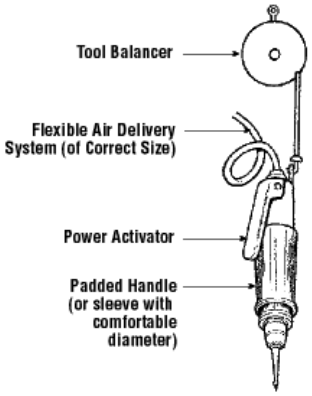

Figure 6.43.—Tool balancers can greatly reduce fatigue.

6.9.2.1 Air Hoses

- Use the proper hose and fittings of the correct diameter.
- Use hoses specifically designed to resist abrasion, cutting, crushing, and failure from continuous flexing.
- Choose air-supply hoses that have a minimum working pressure rating of 150 psig or 150 percent of the maximum pressure produced in the system, whichever is higher.
- Check hoses regularly for cuts, bulges, and abrasions. Tag and replace, if defective.
- Blow out the air line before connecting a tool. Hold the hose firmly and blow away from yourself and others. Never use compressed air to clean or remove debris off one's hair, skin, or clothing.
- Never use compressed air at pressures greater than 30 psi for cleaning purposes.
- Make sure that hose connections fit properly and are equipped with a mechanical means of securing the connection (e.g., chain, wire, or positive locking device).
- Install quick disconnects of a pressure-release type rather than a disengagement type. Attach the male end of the connector to the tool, ***not*** the hose.
- Do not operate the tool at a pressure above the manufacturer's rating.
- Turn off the air pressure to the hose and disconnect it from the tool when not in use or when changing power tools.
- Carry a pneumatic tool by its handle not the hose.
- Secure hoses laid across walkways or curled underfoot to avoid trip hazards.

Figure 6.44.—Hold air line away from yourself and others.

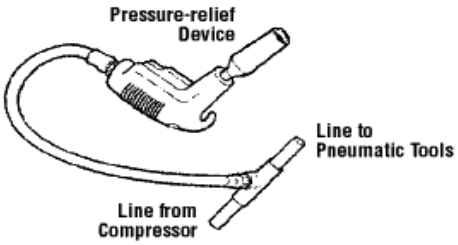

Figure 6.45.—Use quick disconnects of a pressure-release type rather than a disengagement type.

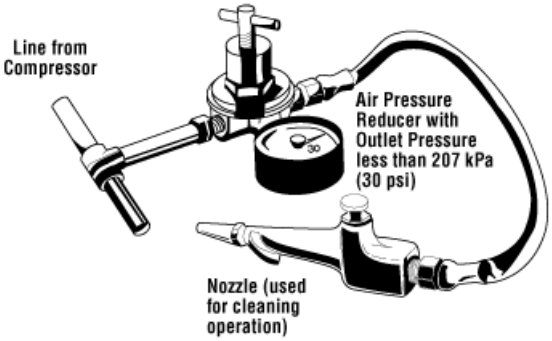

Figure 6.46.—Compressed air used for cleaning purposes must be reduced to less than 30 psi.

6.9.3 Drills

6.9.3.1 Drill Inspection

- Inspect the electrical cords and pneumatic hoses to ensure that they are in a safe condition.
- Follow the manufacturer's instructions when selecting and using a bit or attachment, especially with unfamiliar drills or work.
- Select the bit or attachment suitable for the size of the drill and the work being done.
- Ensure that the bit or attachments are properly seated and tightened in the chuck.
- Use only bits and attachments that turn true.
- Use the auxiliary (second) handle for larger work or continuous operation.

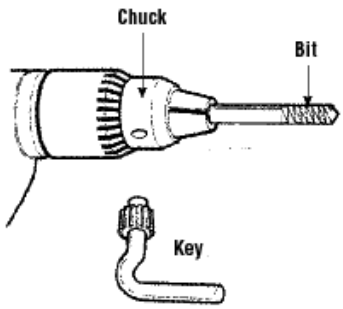

Figure 6.47.—Ensure that bits and attachments are properly seated and tightened in the chuck.

6.9.3.2 Drill Use

- Wear safety glasses with side shields.
- Remove gloves, rings, watches, and loose clothing.
- Tie back long hair.
- Ensure that the floor around the area is free of oil, grease, and clutter that could create a trip or slip hazard.
- Ensure that the working surface is clean of scraps, tools, and materials.
- Keep drill air vents clear to maintain adequate ventilation.
- Keep drill bits sharp.
- Keep all cords clear of the cutting area during use.
- Disconnect the power supply before changing or adjusting the bit or attachments.
- Tighten the chuck securely. Remove the chuck key before starting the drill.
- Secure the workpiece being drilled to prevent movement.
- Slow the rate of feed just before breaking through the surface.
- Drill a small “pilot” hole before drilling large holes.
- Always drill a pilot hole before using a hole saw cutter.
- Use lubrication when using high-speed steel bits.
- Do not attempt to free a jammed bit by starting and stopping the drill. Unplug the drill and then remove the bit from the workpiece.
- Do not reach under or around stock being drilled.
- Always keep proper footing and balance using caution not to over reach.
- Do not use electrical drills in wet or muddy locations. Use a battery-powered drill instead.
- Do not use excessive force to drill into hard material. Reduce drill speed if possible.

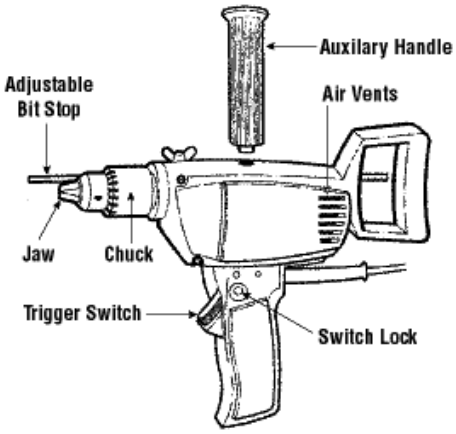

Figure 6.48.—Drill components.

6.9.4 Hand Grinders

6.9.4.1 Hand Grinder Inspection

- Inspect the electrical cords and pneumatic hoses to ensure that the grinder is in a safe condition.
- Connect electrical cords and hoses so that they do not create a trip hazard. Electrical cords must be plugged into a GFCI adapter. If the cord or hose must extend into a pedestrian walkway, it must be secured to the floor.
- Ensure that the guard is secured to the grinder.
- Inspect the grinding wheel for quality and safety (used grinding wheels must be discarded in the proper receptacle for grinding wheels).
- Check that the wheel speed marked on the wheel is equal to or greater than the maximum speed of the grinder.
- Don vibration-resistant gloves, safety glasses with side shields, a half-mask respirator with HEPA filters, a face shield, and hearing protection.
- Remove gloves, rings, watches, and loose clothing. Tie back long hair.
- Ensure that the floor around the area is free of oil, grease, and clutter that could create a trip or slip hazard.
- Ensure that the working surface is clean of scraps, tools, and materials.
- Turn on ceiling exhaust fans.
- Ensure that the wheel has completely stopped rotating before laying the grinder down.
- When finished or when walking away from the grinder, disconnect the electrical cord and pneumatic hose.
- Discard grinding, sanding, and cutoff disks in a container marked “sanding belts/disks,” not with general garbage.

6.9.4.2 Mounting Wheels on Hand Grinders

6.9.4.2.1 Wheel Inspection

Inspect and conduct “a ring test” before mounting a wheel: Tap wheel gently with a nonmetallic tool such as a plastic screwdriver handle or wooden mallet. A wheel in good condition will emit a metallic ring. Reject any a wheel that sounds dead or cracked.

Check the flanges for distortion or abrasion. When flanges are distorted or warped, the contact area is reduced.

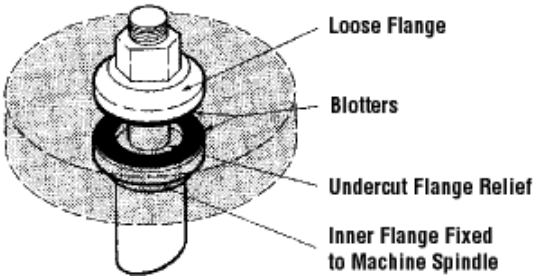

Figure 6.49.—Straight grinder wheel.

6.9.4.2.2 Mounting Straight Wheels

- Ensure that the flanges are not reversed.
- Use blotters to cushion the flange pressure.
- Do not use flat washers or other filler materials in place of flanges.
- Use fixed and loose flanges that have the same diameter and have undercut relief. The minimum flange size is one-third of the wheel diameter.

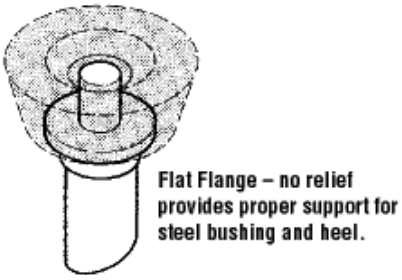

Figure 6.50.—Cup grinder wheel.

6.9.4.2.3 Mounting Cup Wheels

For cup wheels, use a flat, unrelieved flange with a threaded hole mounting.
This flange prevents strain on the bond that anchors the bushing to the wheel cup.

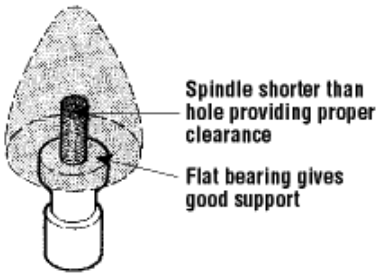

Figure 6.51.—Cone grinder wheel.

6.9.4.2.4 Mounting Cone and Plug Wheels

With cone and plug wheels, breakage commonly occurs when the spindle threads are either too short or too long for the tapped hole in the wheel.

6.9.4.2.5 Mounting Depressed-Center Wheels

- Replace any worn or bent reusable adapters. A damaged adapter will not mount properly.
- Ensure that the grinder spindle shoulder runs true. The adapter must tighten against this shoulder. Use the spacers provided with adapters if the spindle is too long.

- The wheel will wobble if the shoulder is not square with the spindle or if the adapter does not tighten against the shoulder. This can result in wheel breakage and injuries to the operator or a nearby worker.

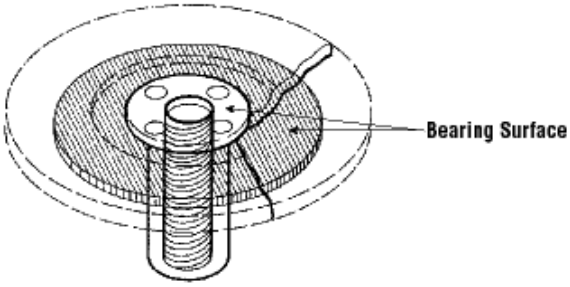

Figure 6.52.—Use suitable adapters to mount depressed center wheels to prevent the wheel from breaking apart.

6.9.5 Magnetic Drills

6.9.5.1 Magnetic Drill Inspection

- Inspect the electrical cords and pneumatic hoses on the drill to ensure that it is in a safe condition.
- Ensure that the drill is unplugged when changing the bit to prevent accidental start up. The only exception is if the drill is currently vertically mounted.
- Inspect the drill bit for quality and safety.
- Ensure that the drill bit is secured into the drill.
- To ensure ideal contact, make sure that the magnetic base is clean while the magnet is turned off.
- To ensure ideal contact, make sure that the mounting surface is clean.
- Ensure that the drill will be plugged into a 115-V, 50- to 60-Hz, three-prong outlet.
- Connect electrical cords and hoses so that they do not create a trip hazard. If the cord or hose must extend into a pedestrian walkway, secure it to the floor.
- Don safety glasses with side shields.
- Before using the drill, secure long hair, remove jewelry, and tape down or remove loose clothing.
- Ensure that the floor around the saw is free of oil, grease, and clutter that could create a trip or slip hazard.
- Ensure that the working surface is clean of scraps, tools, and materials.
- Ensure that the magnetic drill will not be used on the same workpiece as welding is occurring.
- Ensure that no combustible or flammable materials are in the area per NASA **C–7b**.
- When vertically mounting the drill, ensure that a secondary means—such as clamps, vises, or slings—are used to secure it to the mounting surface in case of a power outage or an improperly prepared surface.
- Ensure that the attachment (magnets and secondary means) are disengaged before attempting to move the drill.
- When finished or when walking away from the drill, disconnect the electrical cord and pneumatic hose.

6.9.6 Saws

Cold-cutting saws include hand and powered hacksaws, band saws, and horizontal and vertical circular saws. Hot-cutting saws use an abrasive disc or large toothless (friction) circular saw.

6.9.6.1 Saw Setup

- Wear safety glasses with side shields.

- Ensure that the saw has a start/stop button within easy reach of the operator.
- Ensure that all guards are in place and working properly.
- Guard long material at both ends to prevent anyone from coming into contact with it.
- Ensure that saw blades are clean and sharp.
- Check blades regularly for wear or damage.
- Select the correct blade and saw speed for the material being cut.
- Ensure that the floor around the saw is free of oil, grease, and clutter that could create a trip or slip hazard.
- Ensure that the working surface is clean of scraps, tools, and materials.
- Keep loose clothing away from the cutting area.
- Do not wear jewelry.
- Tie hair back.

6.9.6.2 Saw Use

- Ensure that the blade is completely stopped before removing the stock.
- Use cutting or lubricating fluid when cutting metals.
- Use the stop gauge (if available) when several pieces of the same length are required.
- Support long stock with a floor stand.
- Keep working surface clean of scraps, tools, and materials.
- Keep the floor around the saw free of oil, grease, and debris.
- Attend the saw the entire time that it is operating.

6.9.6.3 Hot Saws

In addition to the requirements in Sections 6.9.6.1 and 6.9.6.2, hot saws have the following requirements:

- Wear glasses with side shields as well as hearing protection.
- Inspect all wheels for possible damage before mounting.
- Check the machine speed against the maximum safe operating speed marked on the wheel.
- Ensure that mounting flanges are equal and have the correct diameter (at least one-fourth of the wheel diameter).
- Use mounting blotters when they are supplied with the wheels.
- Clamp work firmly in place when using nonreinforced cutoff wheels.
- Use a properly designed safety guard covering at least one-half of the grinding wheel.
- Allow mounted wheels to run at operating speed, with guards in place, for 1 min before cutting.
- Bring the wheel into contact with the work without bumping on impact.
- Turn off the coolant before stopping the wheel to avoid an out-of-balance condition.

6.9.6.4 Circular Saws

6.9.6.4.1 Circular Saw Setup

- Wear safety glasses with side shields, hearing protection, and work gloves.

- Remove gloves, rings, watches, and loose clothing.
- Tie back long hair.
- Ensure that the floor around the saw is free of oil, grease, and clutter that could create a trip or slip hazard.
- Ensure that the working surface is clean of scraps, tools, and materials.
- Check the retracting lower blade guard to ensure that it works freely. It must enclose the teeth as completely as possible and cover the unused portion of the blade when cutting.
- Ensure that the blade that you have selected is sharp enough to do the job. Sharp blades work better and are safer.
- Check the saw for proper blade rotation.
- Set the depth of the blade while the saw is unplugged, and lock it at a depth so that the lowest tooth does not extend more than about 0.3 cm or 1/8 in. beneath the wood.
- Keep all cords clear of the cutting area.
- Check for obstructions or other objects such as nails and screws in the material before cutting.

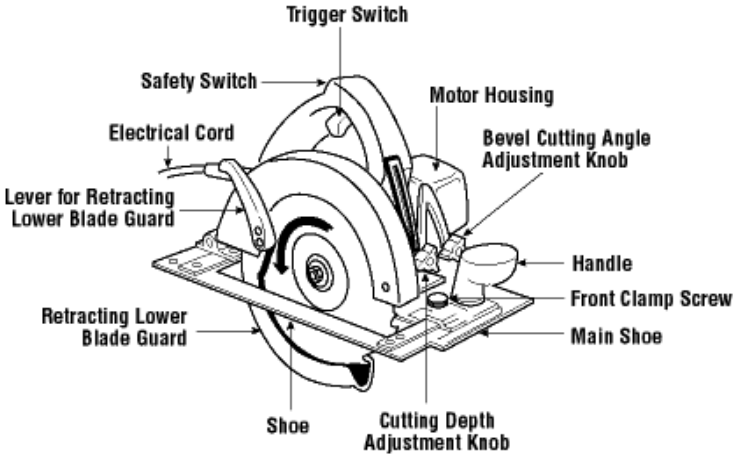

Figure 6.53.—Circular saw.

6.9.6.4.2 Circular Saw Use

- Keep the upper and retracting lower blade guard clean and free of sawdust.
- Disconnect the power supply before adjusting or changing the blade.
- Ensure that the path of the blade will not strike or cut unintended objects.
- Allow the saw to reach full power before starting to cut.
- Use two hands to operate saws—one on a trigger switch and the other on a front knob handle.
- Keep the motor free from accumulating dust and chips.
- Select the correct blade for the stock being cut and allow it to cut steadily. Do not force it.
- Secure the stock being cut to avoid movement.
- Do not overtighten the blade-locking nut.
- Do not twist the saw to change, cut, or check alignment.
- Carry the saw with fingers away from the trigger switch.
- Do not overreach. Keep proper footing and balance.

- Use a wedge or guide clamped or nailed to the stock when ripping.
- Allow the saw to stop completely before setting it down.
- When finished, check to ensure that the retracting lower blade guard has returned to its starting position before laying down the saw.

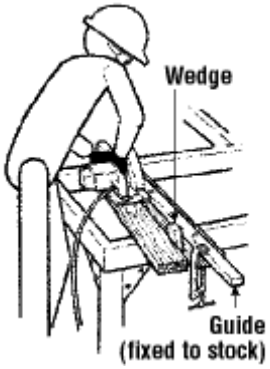

Figure 6.54.—Use a wedge or guide clamped to the stock to rip lumber with a circular saw.

6.9.6.5 Saber, Jig, and Reciprocating Saws

6.9.6.5.1 Saber, Jig, and Reciprocating Saw Setup

- Wear safety glasses with side shields and hearing protection.
- Remove gloves, rings, watches, and loose clothing. Tie back long hair.
- Ensure that the floor around the saw is free of oil, grease, and clutter that could create a trip or slip hazard.
- Ensure that the working surface is clean of scraps, tools, and materials.
- Disconnect the power supply before changing or adjusting blades.
- Use lubricants when cutting metals.
- Keep all cords clear of the cutting area.
- Position the saw beside the material before cutting, and avoid entering the cut with a moving blade.
- Ensure that guards, if present, are installed and are working properly.

6.9.6.5.2 Saber, Jig, and Reciprocating Saw Use

- Hold reciprocating saw with both hands.
- Remember that saber saws cut on the up stroke.
- Secure and support stock as close as possible to the cutting line to avoid vibration.
- Keep the base, or shoe, of the saw in firm contact with the stock being cut.
- Select the correct blade for the material being cut and allow it to cut steadily. Do not force it. Clean, sharp blades operate best.
- Set the blade to go no further than 1/8 to 1/4 in. deeper than the material being cut.
- Begin cutting once the saw reaches its full power.
- Do not force a saw along or around a curve. Allow the machine to turn with ease.

- Insert a blade into and withdraw a blade out of a cut or lead hole while the blade is not moving.
- Do not put down a saw until the motor has stopped.
- Do not reach under or around the stock being cut.

6.9.6.5.3 Starting an Outside Cut

- Place the front of the shoe on the stock.
- Ensure that the blade is not in contact with the material, or the saw will stall when the motor starts.
- Hold the saw firmly down against the material and switch the saw on.
- Feed the blade slowly into the stock maintaining an even forward pressure.

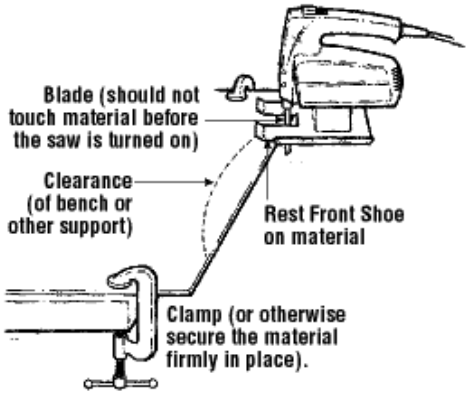

Figure 6.55.—Starting an outside cut.

6.9.6.5.4 Starting an Inside Cut

- Drill a lead hole slightly larger than the saw blade. With the saw switched off, insert the blade in the hole until the shoe rests firmly on the stock.
- Do not let the blade touch the stock until the saw has been switched on and reaches full power.

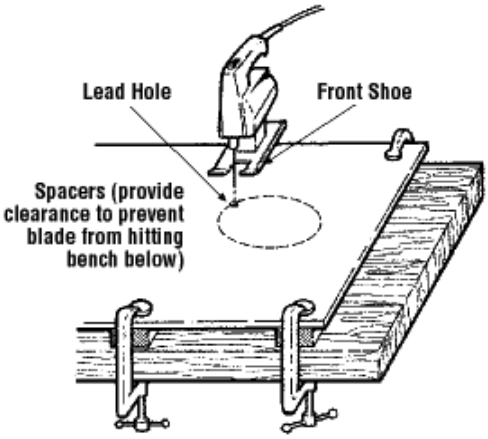

Figure 6.56.—Starting an inside cut.

6.9.7 Surface Grinders

6.9.7.1 Surface Grinder Setup

- Wear safety glasses with side shields and hearing protection.
- Remove gloves, rings, watches, and loose clothing.

- Tie back long hair.
- Ensure that the floor around the area is free of oil, grease, and clutter that could create a trip or slip hazard.
- Ensure that the working surface is clean of scraps, tools, and materials.
- Ensure that the grinder has a start/stop button within easy reach of the operator.
- Check the grinding wheel before mounting it. Ensure that it is properly maintained and in good working order.
- Ensure that the face of the wheel is evenly dressed.
- Ensure that the wheel guard covers at least one half of the grinding wheel.
- File off any burrs on the surface of work that is placed on the magnetic chuck.
- Clean the magnetic chuck with a cloth.

6.9.7.2 Surface Grinder Use

- Place a piece of paper slightly larger than workpiece in the center of the chuck.
- Position work on the paper and turn on the power to the magnetic chuck.
- Check that the magnetic chuck has been turned on by trying to remove work from the chuck.
- Check that the wheel clears the work before starting the grinder.
- Stand to one side of the wheel before starting the grinder.
- Run a new grinding wheel for about 1 min before engaging the wheel into the work.
- Turn off coolant before stopping the wheel to avoid creating an out-of-balance condition.
- Ensure that the grinding wheel is running the speed recommended on the wheel.
- Ensure that the wheel has completely stopped before attempting to clean the magnetic chuck or to mount or remove work.

6.9 Verification of compliance with these requirements is done by SHeD during periodic evaluation and assessments.

- Only grind material that the wheel was designed for.
- Slowly apply work to a cold wheel or disk.
- Do not reach above or around a moving wheel.

6.10 Policies and Procedures for Spraying Paint or Combustible Liquids

(*29 CFR 1910.107Subpart H Hazardous Materials, National Fire Protection Association (NFPA) 33*)

All spraying of parts or material shall be done in the approved ventilated spray booth or hood whenever possible. Operations that must take place outside of a spray paint booth must have safety and health approval to ensure that the proper controls are in place to prevent employee health risks, flammable atmosphere conditions, and environmental impact outside of NASAs air permit allowances.

Hot work shall not be permitted in any area where spray painting is done.

6.10.1 Ventilated Spray Hoods

The ventilated spray paint hoods must have been inspected by SHeD within the past 12 months. The hood must be able to perform at a level that allows it to remove combustible or toxic vapors and to prevent accumulation of explosive or flammable mixtures in the air. The ventilation system shall be in operation at all times when paint or combustible liquids are being sprayed and for a reasonable time thereafter to ensure evacuation of all vapors. Filters must be maintained and replaced as required to prevent excessive paint buildup.

- Areas in and around spray booths and hoods shall be kept free of combustible deposits on floors, walls, and ceilings.

6.10.2 Ventilated Spray Booths

Spray booths and other locations regularly used for spraying paint or combustible liquids shall be ventilated to remove combustible or toxic vapors and to prevent the accumulation of explosive or flammable mixtures in the air. The ventilation system shall be in operation at all times when paint or combustible liquids are being sprayed and for a reasonable time thereafter to ensure the evacuation of all vapors. Filters must be maintained and replaced as required to prevent excessive paint buildup. Electrical equipment used in conjunction with spray booths shall conform to NFPA 70, National Electric Code, Class 1, Group D, and shall be located where not subject to deposits of combustible residues. All electrical equipment used within 20 feet of the opening of the spray booth shall comply with the state code and the NFPA 70, Class 1, Group D, Division 2, for outside booth use, or Class 1, Group D.1, for inside booth use.

All personnel shall wear industrial-hygienist-approved respirators when spray painting outside of a spray hood or in a booth unless otherwise state by an industrial hygienist. Personnel must be in full compliance with the requirements in the Respiratory Protection Program, Chapter **4** of GRC's Occupational Health Programs Manual.

- Areas in and around spray booths and hoods shall be kept free of combustible deposits on floors, walls, and ceilings.
- Spray booths shall be equipped with an NFPA-approved sprinkler system per 29 CFR 1910.107. paragraphs (c)(6)(i) and (h)(12).
- Areas in and around spray booths and hoods shall be kept free of combustible deposits on floors, walls, and ceilings.
- Only authorized personnel shall be in the spray booth during spray painting.
- All equipment in the spray booth that may generate static electricity shall be grounded.
- Before any repair to the spray booth is undertaken involving the use of torches, electric arcs, or other sources of ignition, approval shall be obtained from SHeD and area safety committee chair.

6.10.3 Spraying Outside of a Hood or Booth

6.10 Verification of compliance with these requirements is done by SHeD during periodic evaluation and assessments.

Anytime that extensive spraying outside of a spray booth becomes necessary, such work shall be done when the area is clear of all employees not engaged in the spraying operation. The surrounding area must be protected to prevent overspray from damaging adjacent property. All personnel shall wear industrial-hygienist-approved respirators when spray painting outside of a spray hood or in a booth unless otherwise stated by an industrial hygienist. Personnel must be in full compliance with the requirements in Chapter **4**.

- Areas in and around spray booths and hoods shall be kept free of combustible deposits on floors, walls, and ceilings.
- No source of ignition shall be permitted in any area where combustible materials are being sprayed.
- Spraying shall be done only in approved areas where adequate fire extinguishing equipment is immediately available.

7.0 RECORDS

- NASA **C–40** NASA Glenn Research On-the-Job Training (OJT).—Maintained by the supervisor.

8.0 REFERENCES

Benson, Steve: Brake Line: Press Brakes and More: Planning to Cut Corners on Safety?" The Fabricator.com February 19, 2001. (Section **6.6.6** and its subsections were derived from this reference.)

Document number **Document name**

29 CFR 1910 Subpart D	Walking-Working Surfaces
1910.22	General Requirements
1910.23	Guarding Floor and Wall Openings and Holes
1910.24	Fixed Industrial Stairs
1910.25	Portable Wood Ladders
1910.26	Portable Metal Ladders
1910.27	Fixed Ladders
1910.28	Safety Requirements for Scaffolding
29 CFR 1910 Subpart G	Occupational Health and Environmental Control
1910.94	Ventilation
1910.95	Occupational Noise Exposure
29 CFR 1910 Subpart H	Hazardous Materials
1910.106	Flammable and Combustible Liquids
1910.107	Spray Finishing Using Flammable and Combustible Materials
29 CFR 1910 Subpart I	Personal Protective Equipment
1910.132	General Requirements
1910.133	Eye and Face Protection
1910.134	Respiratory Protection
1910.135	Head Protection
1910.136	Occupational Foot Protection
1910.138	Hand Protection
29 CFR 1910 Subpart N	Materials Handling and Storage
1910.178	Powered Industrial Trucks
1910.184	Slings
29 CFR 1910 Subpart O	Machinery and Machine Guarding
1910.211	Definitions
1910.212	General Requirements for All Machines
1910.215	Abrasive Wheel Machinery
29 CFR 1910 Subpart P	Hand and Portable Powered Tools and Other Hand-Held Equipment
1910.241	Definitions
1910.242	Hand and Portable Powered Tools and Equipment, General
1910.243	Guarding of Portable Powered Tools
1910.244	Other Portable Tools and Equipment
29 CFR 1910 Subpart Q	Welding, Cutting, and Brazing
1910.251	Definitions
1910.252	General Requirements
1910.253	Oxygen-Fuel Gas Welding and Cutting
1910.254	Arc Welding and Cutting
1910.255	Resistance Welding
NASA-STD-**8719.9**	Standard for Lifting Devices and Equipment
NPR **8715.3C**	NASA Procedural Requirement, NASA General Safety Program Requirements
NPD **1800.1C**	NASA Policy Directive, NASA Occupational Health Program Procedures
GLM-QS-1800.1	GRC, Occupational Health Programs Manual
Chapter **3**	Hearing Conservation Program
Chapter **4**	Respiratory Protection Program
Chapter **7**	Local Exhaust Ventilation (LEV)
GLM-QS-1700.1	GRC, Glenn Safety Manual
Chapter **15**	Personal Protective Equipment

Chapter **20**	Lifting Devices and Equipment
Chapter **21**	Mishap and Close Call Reporting, Investigating, and Recordkeeping
Chapter **22**	The Glenn Buddy System
Chapter **28**	Hot Work Authority
Chapter **34**	Fall Protection

APPENDIX A.—DEFINITIONS AND ACRONYMS

Code of Federal Regulations (CFR)

Glenn Manual (GLM)

Glenn Research Center (GRC)

Ground fault circuit interrupter (GFCI)

High-efficiency particulate air (HEPA)

Incident Reporting Information System (IRIS)

NASA Policy Directive (NPD)

NASA Procedural Requirement (NPR)

National Fire Protection Association (NFPA)

Occupational Safety and Health Administration (OSHA)

Safety and Health Division (SHeD)

Contents

1.0 PURPOSE 3
2.0 APPLICABILITY 3
3.0 BACKGROUND 3
4.0 POLICY 4
5.0 RESPONSIBILITIES 4
5.1 SHeD PPE Program Lead 4
5.2 SHeD Industrial Hygienist 4
5.3 Supervisors 4
5.4 Employees 5
5.5 Safety, Health and Environmental Division Chief 6
5.6 Human Capital Development Division Chief 6
5.7 Logistics and Technical Information Division Chief 6
5.8 Medical Director, Occupational Medicine Services 6
5.9 Contractors 6
5.10 Contracting Officers and Contracting Officer Technical Representatives 6
6.0 REQUIREMENTS 6
6.1 Hazard Assessment (*OSHA 29 Code of Federal Regulations (CFR) 1910.132*(*d*)) 6
6.2 Training 7
Employees using PPE shall be trained to know and understand 7
6.3 Eye and Face Protection (*29 CFR 1910.133, 29 CFR 1926.102, and ANSI Z87.1*–2001) 7
6.3.1 Eye and Face Protection Requirements 7
6.3.2 Eye and Face Protection Classifications 8
6.3.3 Eye and Face Protection Usage 8
6.3.4 Eye and Face Protection Inspection and Maintenance 9
6.4 Head Protection *(29 CFR 1910.135, 29 CFR 1926.100, and ANSI Z89.1–2009)* 9
6.4.1 Hard Hat Requirements 9
6.4.2 Hard Hat Usage 9
6.4.3 Hard Hat Inspection and Maintenance 10
6.5 Foot Protection (*29 CFR 1910.136, 29 CFR 1926.96, ASTM 2412–2005, ASTM 2413–2005*) 10
6.5.1 Foot Protection Requirements 10
6.5.2 Foot Protection Usage 10
6.5.3 Foot Protection Inspection and Maintenance 10
6.6 Hand Protection (*29 CFR 1910.138 and ANSI 105-2011*) 10
6.6.1 Hand Protection Requirements 10
6.6.2 Hand Protection Classifications 11
6.6.3 Work Glove Usage 11
6.6.4 Chemical-Resistant Glove Usage 12
6.6.5 Hand Protection Inspection and Maintenance 12
6.7 Chemical-Protective Gloves and Clothing (*29 CFR 1910.132, 29 CFR 1910.138 and ANSI 103-2010*) 12
6.7.1 Chemical Protective Clothing Usage 12
6.8 Electrical Personal Protective Equipment 13
6.9 Flame-Resistant Garments (Clothing) (29 CFR 1910.132, NFPA 2112, and NFPA 2113)
Chapter 8 of the GSM covers flame-resistant clothing as it pertains to electrical work (29 CFR 1910.269 and NFPA 70E) 13
6.9.1 FR clothing Selection and Usage 13
6.9.2 FR Clothing Care, Maintenance, and Inspection 14
7.0 RECORDS 14
8.0 REFERENCES 14
APPENDIX A. - DEFINITIONS AND ACRONYMS 16
APPENDIX B. - PROGRAMS WITH SPECIFIC PPE REQUIRMENTS 18
APPENDIX C. - HAZARD ASSESSMENT PROCESSES 19
APPENDIX D. - SUPPLEMENTARY PERSONAL PROTECTIVE EQUIPMENT INFORMATION 21

D.1 Eye and Face Personal Protective Equipment Selection Chart 21
D.2 Eye and Face Personal Protective Equipment Selection Chart for Radiant Energy 22
D.3 Foot Protection 22
D.3.1 Foot Protection Classification 22
D.3.2 Toe Protection 24
D.3.3 Soles 24
D.3.4 Shoe Material 24
D.3.5 Shoe and Shoe Features for Special Hazards 25
D.4 Hard Hat Classifications 25
D.5 Flame Resistant and Flame Retardant Garments (Clothing) 25
D.6 Safety Glasses (Prescription) 26
D.7 Gloves, Hard Hats, Nonprescription Safety Eyeware, and Other Personal Protective Equipment 26
D.8 Safety Shoes 26

List of Tables

Table D.1.—Eye and Face Personal Protective Equipment Selection Chart 21
Table D.2.—Eye and Face Personal Protective Equipment Selection Chart for Radiant Energy 22
Table D.3.—Classification Table Toe cap Compression 22
Table D.4.—Classification Table Toe Cap Impact 22
Table D.5.—Classification Table Metarsal Compression 23
Table D.6.—Classification Table Metatarsal Impact 23

Chapter 15—Personal Protective Equipment

NOTE: *The current version of this chapter is maintained and approved by the Safety and Health Division (**SHeD**). The last revision date of this chapter was February 2012. The current version is located on the Glenn Research Center (GRC) intranet at http://smad-ext.grc.nasa.gov/shed/pub/gsm/gsm-manual.shtml.*
Approved by Chief of Safety and Health Division.

1.0 PURPOSE

This chapter establishes procedures and practices for the selection and use of personal protective equipment (PPE) not covered by specific programs (e.g., hearing protection or respiratory protection) at the NASA Glenn Research Center's (GRC) Lewis Field and Plum Brook Station (PBS) sites.

The purpose of this chapter is to provide guidance to employees and supervisors on the selection of appropriate PPE to prevent injury or illness that may result from hazards that cannot be controlled using administrative or engineering controls.

2.0 APPLICABILITY

This chapter is applicable to all civil servants, support service contractors, construction contractors, students, and visitors at GRC sites.

Support service contractors and construction contractors are responsible for the health and safety of their employees and for hazard analyses, training, PPE, medical surveillance, and other requirements to ensure compliance with regulatory requirements, OSHA, and NASA policy.

This chapter applies to the use of PPE to provide protection for hazards in the workplace, for example

- Eye and face protection (e.g., goggles and face shields)
- Head protection (e.g., hard hats)
- Foot protection (e.g., safety shoes)
- Hand protection (e.g., gloves)
- Chemical-protective clothing (CPC; e.g., full body suits)
- Flame resistant garments

Other Center programs within the Glenn Research Center Safety Programs Manual, Glenn Research Center Occupational Health Programs Manual, and Glenn Research Center Environmental Programs Manual reference specific PPE associated with the hazards the program addresses. A list of these programs can be found in APPENDIX **B**.

3.0 BACKGROUND

Hazards exist in every workplace in many different forms: sharp edges, falling objects, flying sparks, chemicals, noise, and a myriad of other dangers. The Occupational Safety and Health Administration (OSHA) requires employers to protect their employees from workplace hazards that may cause injury or illness.

Controlling a hazard at its source is the best way to protect employees. Depending on the hazard or workplace conditions, the use of engineering or work practice controls to manage or eliminate hazards to the greatest extent possible is recommended. For example, building a barrier between the hazard and the employees is an engineering control; changing the way in which employees perform their work is a work practice control. When engineering, work practice, and administrative controls are not feasible or do not provide sufficient protection, employers must provide PPE to their employees and ensure its use.

Workplace hazard assessments are performed to help identify hazards and the hazard controls. NASA GRC has multiple established processes to identify workplace hazards and the subsequent controls required to mitigate the hazards. Please see APPENDIX **C** for a list of current hazard assessment processes.

All affected employees, in conjunction with, their supervisors, shall conduct a hazard assessment. The Safety and Health Division (SHeD) provides guidance so proper controls and, when necessary, the proper PPE can be selected. For further information, see Section **6.0**.

> ***NOTE**: An online catalog the "**PPE Quick Reference Guide**" displays all PPE that is currently available through the Glenn Supply Management System. This catalog provides a user-friendly tool to assess PPE that is available at GRC, pictures, sizes, and corresponding catalog numbers for desired PPE, and supplemental information regarding PPE usage and limitations.*

4.0 POLICY

It is GRC's policy to comply with all applicable regulations regarding PPE and ensure that hazards are identified, appropriate PPE is utilized properly, and employees receive training on the use of PPE. This chapter describes the different types of PPE used at GRC and gives guidance on its selection and proper use and its relationship to the hazard assessment process. It describes the responsibilities of supervisors, employees, and SHeD personnel pertaining to PPE use, and it identifies the training required of all personnel using PPE. OSHA standards that apply to each type of PPE are noted in Sections **6.3** to **6.9**. Some types of PPE have their own chapter in the GSM or OHPM (e.g., hearing conservation and respirators) and are referenced as such. SHED is charged with establishing and maintaining adequate policies and procedures for the use of PPE. The authority for this program is outlined in NASA Procedural Requirement (NPR) **8715.3**, NASA General Safety Program Requirements.

5.0 RESPONSIBILITIES

5.1 SHeD PPE Program Lead

The SHeD Program Lead shall develop, implement, and maintain all elements of the PPE program; provide training; and provide guidance in the selection and use of PPE. In addition, the Program Lead shall

- Inform supervisors and employees of the required hazard assessment processes, as listed in APPENDIX **C**, through the PPE training program
- Develop, maintain, and manage the GRC PPE training program
- Update the PPE program as necessary to ensure that the program reflects the latest information available from OSHA, the National Institute of Occupational Safety and Health (NIOSH), other national consensus standards, and Federal regulations
- Perform spot checks, periodic audits, etc, and train Facilities Inspectors to perform audits.
- Work with the Logistics and Technical Information Division to ensure that proper PPE is supplied through the Glenn Supply Management System

5.2 SHeD Industrial Hygienist

Industrial hygiene staff shall provide support for chemical protective clothing (CPC) and other applicable aspects of the PPE program.

5.3 Supervisors

Supervisors of civil servants and support service contractors using PPE shall

- Ensure that hazard assessments are performed, where applicable, to identify and control physical and health hazards
- Ensure that all employees exposed to hazards in the workplace understand the hazards and the hazard assessments
- Maintain a written certification of the workplace hazard assessment using the appropriate hazard assessment processes and the corresponding hazard assessment documentation.(See APPENDIX **C**).
- Contact a SHeD safety engineer or industrial hygienist for assistance with hazard assessments of tasks that may pose exposure to hazardous chemicals

- For each workplace with hazards that necessitate PPE that cannot be corrected with engineering or administrative controls.
  - Provide guidance on the types of PPE that will protect affected employees from the hazards identified in the hazard assessment
  - Communicate selection decisions to each affected employee
  - Ensure that each selected PPE properly fits each affected employee and is used appropriately
- Attend the PPE training when such equipment is required in their area
- Ensure that each affected employee is assigned to, attends, and understands the PPE training course provided by SHeD or the training at an alternative venue approved by SHeD
- Ensure that each affected employee is prepared and able to use PPE properly before performing work that requires the use of PPE
- Enforce the requirements of the PPE program in their area
- Ensure that employees are retrained whenever
  - Changes in the workplace render previous training obsolete
  - Changes in the types of PPE to be used render previous training obsolete
  - Inadequacies in an affected employee's knowledge or use of assigned PPE indicate that the employee has not retained the requisite understanding or skill
- Ensure that employees are provided with all required PPE at no cost to them
- Maintain records of the task-specific PPE training required and provided within the organization
- Ensure that the Human Capital Development Division receives a copy of all PPE training records for entry and tracking in the System for Administration, Training, and Educational Resources for NASA (SATERN).

  ***NOTE**: Contractors shall maintain their own training records.*
- Provide appropriate basic PPE, such as eye protection and hard hats, for visitors to hazardous locations, such as construction sites, machine shops, and chemical laboratories

  ***NOTE**: PPE that requires specific training (respiratory protection, laser safety eye wear, etc.) cannot be issued without approval from SHeD. Personnel requiring this type of PPE will be referred to SHeD representatives whenever a question regarding the proper selection or use of PPE arises that cannot easily be determined with the resources provided to the supervisor or manager.*

5.4 Employees

Employees shall

- Before performing work that necessitates PPE,
  - Perform a hazard assessment in conjunction with their supervisors.
  - Attend PPE training
  - Receive any applicable medical clearance
  - Demonstrate understanding of PPE requirements and the ability to use, store, and properly decontaminate PPE
  - Obtain the proper PPE in the proper size and fit for the work
- Know the hazards in the workplace
- Always wear designated, appropriate PPE for hazardous work

- Inspect PPE for damage prior to use
- Not use personally owned PPE at GRC without the supervisor's approval

  ***NOTE**: Personally owned safety shoes, prescription safety glasses, and other PPE must meet applicable OSHA requirements and ANSI standards. The employer is required by law to provide required PPE to employees at no cost to the employee.*

- Properly dispose of defective or damaged PPE; bag and label PPE contaminated with hazardous materials destined for disposal as hazardous waste
- Stop working in the hazardous area and notify the area manager or supervisor if there is any problem with issued PPE or concerns with the quality, appropriateness, effectiveness, or use of provided PPE

5.5 Safety and Health Division Chief

The SHeD Chief shall provide support to the SHeD PPE program leads in the performance of their duties.

5.6 Human Capital Development Division Chief

The Human Capital Development Division Chief shall provide support to SHeD for PPE training coordination, as well as training documentation for civil servant employees.

> ***NOTE**: Support service contractors are responsible for maintaining their own training records in accordance with their individual contracts with NASA.*

5.7 Logistics and Technical Information Division Chief

The Logistics and Technical Information (LTID) Division Chief shall include PPE items in the Glenn Supply Management System (Stock) and shall notify the SHeD PPE program lead before making any changes to available PPE items. All PPE shall meet or exceed OSHA and ANSI requirements. Additionally, LTID shall ensure that restricted PPE items, within Stock, not be released without SHeD approval.

5.8 Medical Director, Occupational Medicine Services

The Medical Director of Occupational Medicine Services shall maintain complete, accurate records of all PPE-affiliated examinations for Civil Service personnel needing medical clearance prior to the use of PPE. Results of examinations are to be discussed with employees as needed.

> ***NOTE**: Support service contractors may, or, may not utilize the Center's Occupational Medicine Services. For such services rendered outside the Center, the employer of the individual shall maintain any relevant documentation regarding PPE medical clearance.*

5.9 Contractors

Contractors are responsible for providing, implementing, and managing a site-specific PPE program. Contractor PPE programs shall comply with federal and GRC requirements.

5.10 Contracting Officers and Contracting Officer Technical Representatives

Contracting officers and contracting officer's technical representatives shall be knowledgeable about PPE program requirements and ensure that contractors comply with these requirements.

6.0 REQUIREMENTS

6.1 Hazard Assessment (*OSHA 29 Code of Federal Regulations (CFR) 1910.132*(*d*))

6.1 - The SHeD verification procedure to ensure compliance with the requirements listed in this section shall be accomplished by reviewing applicable hazard assessments as noted in APPENDIX **C**.

The most important element of any health and safety program is an in-depth evaluation of the hazards present in the workplace. CFR 1910.132 OSHA states that the employer shall assess the workplace to determine if hazards are present, or are likely to be present, which necessitate the use of PPE. OSHA also states that the employer shall verify the required workplace hazard assessment has been performed, through a written certification that identifies the workplace evaluated; the person certifying that the evaluation has been performed; and the date(s) of the hazard

assessment, and which identifies the document as a written certification of hazard assessment. SHED provides guidance for job and task hazard assessments through a variety of processes. (See Appendix **C**) The NASA GRC C**237** PPE Hazard Assessment Survey and Analysis form was created as an individual employee hazard assessment tool to meet the requirements of CFR 1910.132. If one of the other hazard assessment processes, listed in Appendix **C** is used as an employee hazard assessment than it must address the required PPE, per the hazards, and include the date and name of whom performed the assessment as a minimum. Otherwise, the C**237** should be used as supporting documentation to the process to meet the OSHA requirements. (e.g., Safety Permit Process)

6.2 Training (*29 CFR 1910.132(f)*)

6.2 - The SHeD verification procedure to ensure compliance with the requirements listed in this section shall be accomplished by reviewing SATERN records or other personnel training records as required. It is also possible that training efficacy could also be verified during periodic audits or spot checks.

Employees using PPE shall be trained to know and understand

- What PPE is necessary
- When PPE is necessary
- How to properly inspect PPE for wear or damage
- How to properly put on and adjust the fit of PPE
- How to properly remove PPE
- The limitations of PPE
- How to properly care for and store PPE

Please note that PPE-specific Training requirements are specified in each of the PPE subcategories (e.g., eye and face protection and hand protection) Training Requirements (*29 CFR 1910.132(f)*)

SHeD is available to provide training for all employees required to wear PPE. Training must be provided to employees before they are required to wear PPE.

Refresher training is required when

- There is a change in the type of PPE being used, rendering previous training obsolete.
- The employee does not show the ability to properly use the PPE.
- A worker's job scope has changed or been altered, rendering previous training obsolete.

For chemical-specific training, contact SHED industrial hygienist, as appropriate.

> ***NOTE**: An online catalog "**PPE Quick Reference Guide**" displays all PPE that is currently available through the Glenn Supply Management System. This catalog provides a user-friendly tool to assess PPE that is available at GRC, pictures, sizes, and corresponding catalog numbers for desired PPE, and supplemental information regarding PPE usage and limitations.*

6.3 Eye and Face Protection (*29 CFR 1910.133, 29 CFR 1926.102, and ANSI Z87.1*–2001)

6.3 - 6.9 - The SHeD verification procedure to ensure compliance with the requirements listed in this section, shall be accomplished by Facility Inspections, Spot Checks, Periodic Audits, Exposure Assessments, Safety Permit Reviews, and other Hazard Assessment processes. (See APPENDIX **C** for a list of applicable hazard assessments)

6.3.1 Eye and Face Protection Requirements

The requirements of 29 CFR 1910.133, 29 CFR 1926.102, and ANSI Z87.1 apply to any PPE used to protect the eye and face.

Eye and face protection must be worn when employees are exposed to eye or face hazards from

- Flying particles
- Molten metal
- Liquid chemicals (acids, caustics, hot liquids, etc.)
- Hazardous gases or vapors
- Potentially injurious light radiation

Supervisors are responsible for ensuring that eye and face protection used by their employees is suitable for the specific task and provides adequate protection from hazards. A hazard assessment must be performed prior to selecting any eye or face protection. When the possibility of multiple and simultaneous exposures exist, protection against the highest level of each hazard shall be provided.

All protective eyewear used at GRC shall meet the requirements of ANSI Z87.1 or ANSI Z136 (for laser eyewear) and shall be marked with the manufacturer's name and applicable standard. Appendix **D.6** has information on how to obtain this type of PPE from the Glenn Supply Management System (Stock).

6.3.2 Eye and Face Protection Classifications

There are various types of eye and face protection available depending upon the specific hazard. All eye and face protection must be ANSI Z87.1 approved and have Z87 or Z87+ marked on them. Some types of eye and face protection follow:

- **Safety glasses**.—Used to protect the eyes from flying particles, machining chips, and minor impacts

  NOTE*: Safety glasses must be selected based on whether the hazard is low (Z87) or high impact(Z87+) and must have integrated or attachable side shields.*

- **Safety glasses with face shield**.—Used to protect the eyes, face, and neck

  NOTE*: Face shields alone do not provide adequate protection from many hazards and must always be worn in conjunction with safety glasses with side shields or goggles. When employees handle high-pressure compressed gases or exposed cryogens, face shields must be of sufficient length to protect the face and neck.*

- **Goggles**.—Used to protect employees from airborne dusts, molten metal from gas welding and cutting, chemical liquids or vapors, and sources of high-intensity visible light, ultraviolet (UVA or UVB) radiation, or infrared radiation.

  NOTE*: Goggles must be selected for a specific type of hazard. They must have direct or indirect vent features if fogging can occur and be sized to accommodate prescription eyeglasses when required by the user.*

- **Welding helmet**.—Required to protect employees from mechanical, thermal, and optical hazards associated with arc welding

  NOTE*: Safety glasses or goggles must be worn in addition to the welding helmet.*

- **Arc flash hoods, helmets, and face shields**.—Used to protect employees exposed to electrical arc flash hazards as required by National Fire Protection Association (NFPA) 70E, Standard for Electrical Safety in the Workplace.

  NOTE*: The maximum arc fault current must be determined by analysis to select the appropriate level of eye and face protection.*

6.3.3 Eye and Face Protection Usage

6.3.3.1 Safety Glasses with Side Shields

Side protection is always required for safety glasses or safety goggles. Personnel may use prescription safety glasses, but these must be equipped with side shields, and glasses must meet the requirements of ANSI Z87.1. Prescription safety glasses may be ordered through GRC's Occupational Medicine Services as specified in Appendix **D.6**.

6.3.3.2 Contact Lens Wearers

Employees may wear contact lenses while performing hazardous work, but they must wear approved safety glasses or goggles. Otherwise, approved safety glasses or goggles must fit easily over prescription eyeglasses.

6.3.3.3 Welding Helmet Wearers

Modern professional welding helmets are equipped with auto-darkening filters up to shade 10 that react to electrical arcs within a few milliseconds. Although OSHA does not specifically approve the use of these types of helmets because of the lack of test data, they are commonly used throughout industry and most comply with the radiant-energy filtering requirements of ANSI Z87.1. GRC does not recommend or prevent the use of these electronic welding helmets. It is up to the employees' supervisor to determine if these offer adequate protection from optical radiation and to verify that the helmet does meet ANSI Z87.1.

Standard welding helmets, without auto-darkening filter lenses, must be equipped with appropriate shades for the type of welding to be performed, as specified in Appendix **D.2**.

6.3.3.4 Safety Glasses with Phototropic Lenses

Using phototropic lenses for operations where there are rapid changes in ambient light is not permitted. Examples would be tow motor or vehicle operators moving materials from exterior bright sunlight to interior artificial light. Phototropic or photochromatic lenses shall ***not*** be used for indoor industrial applications. They may be used outdoors only, providing the operations do not involve hazardous ultraviolet or infrared radiation.

6.3.4 Eye and Face Protection Inspection and Maintenance

Eye protection is a personal item and should be used exclusively by the individual to whom it is issued. All eye and face protection shall be maintained in a clean and reliable condition. Continuous use of dirty or scratched lenses can contribute to eye fatigue and result in accidents. Eye protectors shall be cleaned as needed in a solution of mild soap and water.

Pitted or scratched prescription lenses must be replaced before the safety eyewear may be used again. Supervisors shall ensure compliance. Prescription safety glasses may be procured through Occupational Medicine Services as specified in Appendix **D.6**.

6.4 Head Protection *(29 CFR 1910.135, 29 CFR 1926.100, and ANSI Z89.1–2009)*

6.4.1 Hard Hat Requirements

The requirements of 29 CFR 1910.135,29 CFR 1926.100, and ANSI Z89.1 apply to any PPE used to protect the head from impact and electrical shock. Hard hats are required when there is a potential for injury to the head from falling objects, side impact, or bumps. Hard hats able to reduce electrical shock must be worn when an employee is near exposed electrical conductors that could contact the head.

Protective helmets and hard hats worn at GRC must meet the requirements established by ANSI for industrial head protection (ANSI Z89.1). APPENDIX **D.2** has information on how to obtain this type of PPE from the Glenn Supply Management System (Stock).

6.4.2 Hard Hat Usage

All Head protection used by employees must be ANSI Z89.1 approved and be marked with a Z89.1 stamp.

All head protection utilized by employees shall offer protection from impact and penetration by falling and flying objects and from limited electrical shock and burn. Therefore, bump caps shall not be used for protection from head hazards since they do not meet the ANSI requirements, which establish specific protective performance characteristics.

All safety hats shall be fitted so that there is at least 1½ in. of airspace between the top of the wearer's head and the inside shell of the hat. This permits the suspension to provide adequate cushioning. Hard hats must be worn such that the suspension system fits securely on the head and the hat adjustment is at the back. Wearing the hard hat in any other manner will seriously compromise its protective capabilities.

Chin-straps are recommended where there is a reasonable probability that safety hats could be knocked or blown off.

Winter liners can be worn in cold weather conditions.

Protecting the head may also require covering or confining long hair when there is a potential for it to become entangled in moving machinery.

6.4.3 Hard Hat Inspection and Maintenance

Employees are responsible for inspecting their hard hats before each use. Hard hats should be cleaned of debris prior to inspections to ensure that all fractures and defects can be seen. Hard hats should be cleaned in warm water with a mild detergent. Solvents and other harsh chemicals should not be used to clean a hard hat. Stickers should not be used on hard hats since they can cover a small fracture in the shell.

All components including the shell, suspension, headbands, and accessories shall be visually inspected for dents, cracks, punctures, and any damage due to impact, rough treatment, or wear that may reduce the structural integrity of the hard hat below design criteria.

Damaged hard hats cannot be repaired. They shall be discarded and replaced. Other defective parts (suspension, chin strap, and other attachments) must be replaced with original equipment manufacturer (OEM) parts.

6.5 Foot Protection (*29 CFR 1910.136, 29 CFR 1926.96, ASTM 2412–2005, ASTM 2413–2005*)

6.5.1 Foot Protection Requirements

Per 29 CFR 1910.136, protective footwear with approved metatarsal or toe guards, or both, shall be worn by all personnel who are working in areas where there is a danger of foot injuries due to

- Falling objects
- Rolling objects
- Piercing the sole of the foot
- Electrical hazards at ground level

All safety-toe footwear must meet the requirements and specifications of ASTM 2413–2005 and must be maintained in reliable condition in order to ensure its protective capabilities. Appendix **D.3.1** has information regarding foot protection selection, and Appendix **D.8** has information on how to obtain this type of PPE.

6.5.2 Foot Protection Usage

All footwear shall be properly laced and fit snugly. The toe cap shall cover the entire toe area of the foot. If the toe cap does not cover the entire toe area, or extends past the toe area, the footwear will not provide the proper fit or adequate protection, and it will be uncomfortable to wear.

6.5.3 Foot Protection Inspection and Maintenance

Footwear is a personal item and shall be used exclusively by the individual to whom it is issued. Footwear shall be maintained in a clean and reliable condition.

Footwear should be inspected before each use for

- Tears in the upper part of the safety shoe
- Worn or torn laces
- Protrusions through the sole
- Dents in the toe cap or metatarsal protection

If any of the listed conditions occur, the footwear must be replaced immediately.

6.6 Hand Protection (*29 CFR 1910.138 and ANSI 105-2011*)

6.6.1 Hand Protection Requirements

The requirements of 29 CFR 1910.138 apply to applications where protective gloves are required. Hand protection is required when employee hands or arms are exposed to possible

- Severe cuts and lacerations
- Abrasions
- Punctures
- Skin absorption of harmful substances
- Chemical burns
- Temperature extremes

ANSI 105-2011 provides glove manufacturers a mechanism to classify their gloves for specified areas of glove performance to include; mechanical protection, chemical protection, detection of holes, heat and flame protection, vibration reduction, and dexterity. Chemical-resistant gloves are performance tested, following ASTM F739-07, by each manufacturer against chemicals to determine their ability to resist chemical breakdown from a specific chemical; therefore, the selection of chemical-resistant gloves must be based on the manufacturer's performance data, which is usually available online for most major manufacturers. Appendix **D.7** has information on how to obtain this type of PPE from the Glenn Supply Management System (Stock).

6.6.2 Hand Protection Classifications

ANSI 105-2011 classifies gloves in multiple categories:

(1) Mechanical Protection
   a. Cut Resistance
   b. Puncture Resistance
   c. Abrasion Resistance

(2) Chemical Protection
   a. Chemical Permeation Resistance
   b. Chemical Degradation Resistance

(3) Detection of Holes

(4) Heat and Flame Protection
   a. Ignition Resistance and Burning Behavior
   b. Heat Degradation Resistance
   c. Conductive Heat Resistance

(5) Vibration Reduction

(6) Dexterity

Typically, gloves are designed to protect employees from physical hazards such as cuts, abrasions, and burns. Chemical-resistant gloves are designed to protect employees from chemical exposures.

6.6.3 Work Glove Usage

Work gloves ***shall*** be used in accordance with the manufacturer's recommendations. Loose-fitting work gloves ***shall not*** be used when an employee is working on or near open moving parts such as drills and grinders. In this case, the gloves must be form fitting and cannot have torn fragments hanging from them. There are several styles of tight-fitting work gloves available through the Glenn Supply Management System.

Oils and greases are common causes of occupational dermatitis. Oil- and grease-protective work gloves should be worn when working around oily and greasy parts. The Glenn Supply Management System currently stocks several nitrile-coated work gloves that will offer protection from oils and greases.

Thermal-protective gloves provide insulative protection from high temperatures, ***not*** protection from spilled cryogenic liquids. They are designed to fit loosely so that they can quickly be shaken off in case of a spill.

Cryogenic water proof gloves provide protection from the extremely low temperatures associated with cryogenic liquids. They are designed to fit loosely so that they can quickly be shaken off in case of a spill

6.6.4 Chemical-Resistant Glove Usage

See Section **6.7** for information about using chemical-resistant gloves.

6.6.5 Hand Protection Inspection and Maintenance

All hand PPE shall be maintained in good, clean condition in accordance with the manufacturer's recommendations. Gloves should be checked for signs of deterioration before every use.

6.7 Chemical-Protective Gloves and Clothing (*29 CFR 1910.132, 29 CFR 1910.138 and ANSI 103-2010*)

Hazardous chemicals can easily pass through inappropriate protective material resulting in direct contact with the skin. Many studies indicate that chemicals can be absorbed through the skin without being noticed by the worker. Chemicals absorbed through the skin, or indirectly ingested via dermal contact, contribute to the overall chemical dose. CPC is designed to prevent hazardous chemicals from coming in contact with the skin. Appendix **D.7** has information on how to obtain this type of PPE from the Glenn Supply Management System (Stock)

6.7.1 Chemical Protective Clothing Usage

When a hazard assessment has identified a need for CPC, proper selection is based on the

- Task performed
- Identification of potential dermal hazards
- Severity of the hazard
- Degree of exposure to the hazard (frequency and duration)
- Employee sensitivity to CPC material (e.g., latex allergy)
- Performance data of the gloves and garments (permeation, degradation, penetration, and breakthrough time)

It is important to note the following when selecting CPC:

- Latex gloves offer no chemical protection and can only be worn to protect hands against general dirt and debris and only by individuals not allergic to latex.
- Users must know the glove or garment material and the manufacturer. Do not depend on the color and appearance of the garment to indicate performance information.
- Chemical-resistant gloves or garments may only provide limited protection against many chemicals.
- No single glove or garment material is suitable for all chemicals.
- Performance characteristics of gloves or garments are based on manufacturer’s information.
- Chemical resistance varies by manufacturer. Always check with the manufacturer for material effectiveness against specific chemical conditions in the workplace.
- When working with a chemical mixture, CPC that protects against all the chemicals in the mixture must be selected. This may require more than one layer of CPC.
- When protection against physical and chemical hazards is required, two layers may be worn. For example, a chemical-protective glove can be used as a liner or first layer followed by an outer, more durable glove to protect against abrasion or punctures.
- Nondisposable, chemical-protective gloves and garments shall be cleaned after each use to ensure that chemical contamination does not remain on the glove.

- In some circumstances, it may be more cost effective to regularly dispose of cheaper gloves or garments than to reuse more expensive gloves or garments.
- Employees shall remove CPC in such a manner so as to prevent skin contamination. This is discussed in the PPE training.

6.8 Electrical Personal Protective Equipment

For guidance on electrical PPE, refer to Chapter **8** of the GSM and NFPA 70E.

6.9 Flame-Resistant Garments (Clothing) (29 CFR 1910.132, NFPA 2112, and NFPA 2113) Chapter 8 of the GSM covers flame-resistant clothing as it pertains to electrical work (29 CFR 1910.269 and NFPA 70E)

Most Flame-Resistant (FR) clothing is designed to protect workers from two specific types of hazards, flash fire and electrical arc flash. Flame resistance can be an inherent property of a material, or it can be imparted onto a material by specific treatment. This treatment is usually a chemical treatment and clothing treated in this manner is sometimes referred to as Flame Retardant clothing.

All FR clothing must meet the requirements of NFPA 2112 and NFPA 2113. Appendix D has further information of FR clothing.

6.9.1 FR clothing Selection and Usage

A hazard assessment of the work and workplace needs to be performed to determine the need for the wearing of FR clothing.(APPENDIX **C** has more information of hazard assessment process at GRC) The hazard assessment should be used to determine if flammable materials are present in quantities that will generate a flash fire and endanger employees. Factors to consider in determining if FR clothing is require shall include, but not limited to:

- Proximity of the work to be performed to a hazard presenting a flash fire potential
- The presence of flammable materials in the environment during process operations
- The potential for the task being performed to increase the possibility of a flammable release; this could result from a mechanical failure such as a line breaking
- Operating conditions of the process — that is, potential for flammable fumes or vapors, and so forth
- The presence of engineering controls designed to reduce exposure to flammable materials present during normal operations
- Accident history
- Means and duration of egress within potential exposure zone (e.g., location and distance to exits, potential congestion, elevated or restricted areas, connections to lifelines/fall protection, capability of workers to escape, etc.)

For maximum protection, employees, who are required to wear FR clothing, shall adhere to the manufactures' instructions. Supervisors and employees shall:

- Wear additional personal protective equipment (PPE) as determined as necessary from a review of the potential hazards
- Not wear nonflame-resistant clothing(street clothes, rain jackets, etc.) over flame-resistant garments
- Ensure FR or nonmelting undergarments (closest to the skin) shall be used .An incidental amount of elastic used on nonmelting fabric underwear or socks shall be permitted.
- Wear FR collars closed.
- Wear sleeves and cuffs down and secured.
- Ensure that protective neck, head, hand, and foot coverings be worn if the occupational hazard warrants their use.

6.9.2 FR Clothing Care, Maintenance, and Inspection

Organizations can choose to maintain their own FR clothing however, there are also private companies that can be contracted to inspect, launder, repair, and dispose of FR clothing in accordance with NFPA 2113.

Flame-resistant clothing shall be cleaned in accordance with manufacturer instructions. If cleaning instructions are not provided, protective garments shall be cleaned in accordance with the recommendations provided in ASTM F 1449, *Standard Guide for Care and Maintenance of Flame-Resistant and Thermal Protective Clothing*. FR clothing that is contaminated shall:

- Be disposed of if decontamination is not recommended by the manufacturer or it cannot be achieved.
- Be handled in a manner as to prevent cross-contamination
- Not be laundered or dry cleaned in public facilities.
- Not stored with other clothing without being laundered

FR clothing shall be inspected by the employee for damage, soiling, or contamination after each use. Damaged and contaminated FR clothing shall be immediately removed from service. FR clothing shall also be removed from service when it exceeds the manufacturer-stated service life, if one is indicated.

Repair and alterations to FR clothing shall be done in accordance to the manufactures instructions. Repair and alterations to FR clothing shall be performed in the same manner and using the same materials as the manufacturer. Deteriorated FR clothing shall be disposed of when it can no longer be repaired or serviced. Appendix **D.5** has more information on FR clothing.

7.0 RECORDS

Training records for civil servants.—Maintained by the Human Capital Development Division

Training records for support service contractors, construction contractors, maintenance contractors, and others.—Maintained by support organizations. (Copies of classroom attendance sheets will be made available to support organizations upon request.)

Records of workplace hazard assessments shall be maintained per the various document requirements.

All completed C237 forms shall be maintained by the supervisor and employee who originated the form.

Complete, accurate records of all PPE-affiliated examinations for personnel needing medical clearance prior to the use of PPE.—Maintained by Occupational Medicine Services(*for CS and SSC that utilize Center Medical Services*).

***NOTE**: Support service contractors may, or, may not utilize the Center's Occupational Medicine Services. For such services rendered outside the Center, the employer of the individual shall maintain any relevant documentation regarding PPE medical clearance.*

8.0 REFERENCES

Document Number	Document Name
29 CFR 1910	Occupational Safety and Health Standards Subpart I—Personal Protective Equipment.
29 CFR 1926	Safety and Health Regulations for Construction Subpart E—Personal Protective and Life Saving Equipment.
ASTM F2413-05	ASTM Standard Specification for Performance Requirements for Foot Protection, 2005.
ANSI/ISEA 103-2010	ANSI for Classification and Performance Requirements for Chemical Protective Clothing, 2010

ANSI/ISEA 105-2011	ANSI for Hand Protection Selection Criteria, 2011
ANSI/ ISEA Z87.1	ANSI Practice for Occupational and Educational Eye and Face Protection, 2010.
ANSI/ ISEA Z89.1	ANSI Standard for Industrial Head Protection, 2009.
NFPA 2112	Standard on Flame-Resistant Garments for Protection of Industrial Personal Against Flash Fire
NFPA 2113	Standard on Selection, Care, Use, and Maintenance of Flame-Resistant Garments for Protection of Industrial Personnel Against Flash Fire
NPR **1800.1**	NASA Occupational Health Program Procedures, Accident Prevention. Manual for Industrial Operations. 1988. National Safety Council, Washington, D.C.
GLM-QS-**1700.1**	Chapters from the Glenn Safety Manual are referenced in APPENDIX **B**.
GLM-QS-**1800.1**	Chapters from the Occupational Health Programs Manual are referenced in APPENDIX **B**.

APPENDIX A.—DEFINITIONS AND ACRONYMS

Administrative controls.—Administrative controls are procedures used to eliminate or reduce the exposure to the hazard: for example,

- Altering the manner in which employees implement a given procedure or perform a given process or task
- Limiting the time that an individual performs a task
- Rotating employees

American National Standards Institute (ANSI)

American Society for Testing and Materials (ASTM).—Currently known as ASTM International.

Arc Flash - The passage of substantial electrical current through ionized air created by an electrical fault.

Breakthrough time.—The time it takes for a chemical to permeate through a material.

Chemical protective clothing (CPC).—Includes chemical-resistant gloves, aprons, coveralls, and boots.

Code of Federal Regulations (CFR).—A codification of the general and permanent rules published in the Federal Register by the Executive Branch departments and agencies of the Federal Government. As it pertains to the personal protective equipment program, the applicable elements of both 29 CFR 1910 (Occupational Safety and Health Standards) and 29 CFR 1926 (Safety and Health Regulations for Construction) apply.

Control measures.—Methods used to reduce or eliminate exposure to hazards or potential hazard.

Degradation.—The change in a physical property of glove or chemical-protective clothing material as a result of contact with an incompatible chemical: for example, discoloration, brittleness, softness, swelling, and weakness.

Dermatitis.—Inflammation of the skin.

Dose.—Level of risk due to chemical exposure determined by the

- Concentration of the chemical
- Route of exposure
- Duration of exposure

Engineering controls.—Methods of controlling employee exposure by modifying the source or reducing the quantity of contaminants released into the work environment: for example,

- Machine guards
- Sound-absorbing panels
- Local exhaust and ventilation
- Substitution of a less hazardous chemical

Exposure.—Contact with a chemical, biological, or physical hazard.

Flame Resistant (FR) - The property of a material whereby combustion is prevented, terminated, or inhibited following the application of a flaming or nonflaming source of ignition, with or without subsequent removal of the ignition source.

Flash Fire - rapidly spreading fire caused igniting an atmosphere derived from hydrocarbon vapors of an ignitable liquid or finely divided combustible particles(e.g., coal dust or grain) in concentration exceeding the chemical's lower explosive limit (LEL).

Flame Retardant - A chemical compound that can be incorporated into a textile fiber during manufacture or applied to a fiber, fabric or the textile item during processing to reduce flammability.

Glenn Research Center (GRC)

Glenn Safety Manual (GSM)

Hazard assessment.—A method used to determine hazards related to specific job tasks. The assessment may include employee exposure monitoring. The hazard assessment determines the CPC use and provides the OSHA-required certification that the assessment has been conducted.

Job hazard analysis (JHA).—A method used to identify, quantify, and verify hazards related to job tasks.

Laboratory Standard Operating Procedure (LSOP)

NASA Procedural Requirement (NPR)

National Electric Code (NEC)

National Fire Protection Association (NFPA)

National Institute of Occupational Safety and Health (NIOSH)

Occupational Health Programs Manual (OHPM)

Occupational Safety and Health Administration (OSHA)

Operations Team (Ops Team)

Original equipment manufacturer (OEM)

Penetration.—Bulk flow of a chemical through a glove material (i.e., through seams and pinholes).

Performance data.—Testing data provided by chemical-resistant personal protective equipment manufacturers to inform users of each material's ability to protect against specific chemicals. Performance data typically measures penetration, degradation, and permeation of a chemical through a specific material.

Permeation.—Movement of a chemical through a material at a molecular level without going through pinholes, pores, or other visible openings.

Personal protective equipment (PPE).—Clothing, devices, and other work accessories designed to create a barrier against workplace hazards. PPE includes items such as goggles, face shields, safety glasses, hard hats, safety shoes, gloves, respirators, hearing protection (ear plugs and muffs), and chemical protective clothing.

Plum Brook Station (PBS)

Safety and Health Division (SHeD)

System for Administration, Training, and Educational Resources for NASA (SATERN)

APPENDIX B. -PROGRAMS WITH SPECIFIC PPE REQUIRMENTS

- Electrical-protective equipment (see Chapter **8** of the GSM)
- Shop Safety (see Chapter **14** of the GSM)
- Explosives, Propellants, & Pyrotechnics (see Chapter **18** of the GSM)
- Fall Protection (see Chapter **34** of the GSM)
- Digging, Trenching, & Excavation Procedure (see Chapter **35** of GSM)
- Asbestos (see Chapter **2** of the OHPM)
- Hearing protection (e.g., earplugs and muffs; see Chapter **3** of the OHPM)
- Respiratory protection (e.g., respirators; see Chapter **4** of the OHPM)
- Lead (see Chapter **5** of the OHPM)
- Bloodborne Pathogens (see Chapter **11** of the OHPH)
- Laser protection (see Chapter **13** of the OHPM)
- Synthetic Inorganic Fiber Program (see Chapter **19** of the OHPM)
- Nanomaterial Health and Safety (see Chapter **23** of the OHPM)

APPENDIX C. -HAZARD ASSESSMENT PROCESSES

Note: *The list below is a list of hazard assessment processes applicable to NASA GRC. This list may not cover all hazard assessments processes used at NASA GRC and approved by SHeD.*

Process Name	Description/ Purpose	Reference Document	Form/ Documentation
Bloodborne Pathogens Exposure Control Plan	Identifies potentially exposed employees and determines proper control measures	OHPM Chapter **11**	
Chemical Pre-Approval Process	Acquisition of Hazardous Chemicals and Materials to identify area use and proper control measures	OHPM Chapter **14**	
Confined Space Entry Permit	Identify various hazards and controls for work in confined spaces, including excavations >4feet in depth	GSM Chapter **16**	**C-199**
Energized Electrical Work Permit	Identify electrical hazards and required control measures prior to performing energized work	GSM Chapter **8**	**C-780**
Facilities Inspections	Identify facility-based safety and fire hazards to provide a safe environment for employees to work	GSM Chapter **24**	SHEtrak
GRC Nanomaterials Usage Survey	Identifies types of nanomaterials in use by the GRC staff, current practices including PPE use and controls and assists in determining need for exposure assessment or additional controls	OHPM Chapter **23**	**C-235**
Fall Prevention Plan	Pre plan process for employees and SHED to determine the need for applicable types of fall protection based on the identified hazards	GSM Chapter **34**	**C-979**

Hazardous Noise Exposure Assessment	Determines employee enrolment in the hearing conservation program and hearing protection requirements	OHPM Chapter **3**	SHeD Report
Hot Work Permit	Prevent loss of life, property, and research capability caused by ignition from hot work operations. Mitigate hazards to ensure that all occupational health requirements are met to protect the workers and adjacent personnel.	GSM Chapter **28**	**C-7a & C-7b**
Job Hazard Assessment	Identify hazards associated with job/task and the control measure necessary to mitigate the hazards	GSM Chapter **33**	**C-82**
Job Hazard Assessment **(work order system)**	Identify hazards associated with job/task and the control measure necessary to mitigate the hazards	GSM Chapter **33**	**C-239**
Chemical Hygiene Policy Lab Standard Operating Procedures	Identify hazards associated with chemical laboratory operations	OHPM Chapter 25	Chemical Hygiene and LSOP eRoom
PPE Hazard Assessment Survey and Analysis	Identify hazards associated with employees everyday work/ task and the control measures and PPE used to mitigate the hazards	GSM Chapter **15**	**C-237**
Respiratory Protection Hazard Assessment	Required to identify employee respiratory hazards to determine respiratory protection needs	OHPM Chapter **4**	SHeD Report
Safety Permit & Process Hazards Safety	The process establishes a system for documenting operational hazards and controls for research and test operations. It is also designed to identify hazards that may result from changes.	GSM Chapter **1a** GSM Chapter **3**	**C-923 & C-923a**

APPENDIX D.—SUPPLEMENTARY PERSONAL PROTECTIVE EQUIPMENT INFORMATION

The following information is intended to assist the user in selecting PPE.

> ***NOTE:*** *This is not an inclusive list, and any mention of a specific product brand name is not intended as an endorsement of that product.*

D.1 Eye and Face Personal Protective Equipment Selection Chart

TABLE D.1.—EYE AND FACE PERSONAL PROTECTIVE EQUIPMENT SELECTION CHART (ANSI/ ISEA Z87.1)

Source (and some examples)	Assessment of hazard	Protection required
Impact (chipping, grinding, machining, masonry work, woodworking, sawing, drilling, chiseling, powdered fastening, riveting, and sanding)	Flying fragments, objects, large chips, particles, sand, dirt, etc.	Glasses with side protection Goggles Faceshields worn over spectacles or goggles
Heat (furnace operations, pouring, casting, hot dipping, and welding)	Hot sparks Splashes from molten metals High-temperature exposure	Glasses with side protection Goggles Faceshields worn over spectacles or goggles Screen faceshields Reflective faceshields
Chemicals (acid and chemical handling, degreasing, and plating)	Splash Irritating mists	Goggles (eyecup or cover type) Faceshields worn over spectacles or goggles Special-purpose goggles
Dust (woodworking, buffing, and general dust conditions)	Nuisance dust	Goggles (eye cup or cover type)
Electric arc welding	Optical radiation	Welding helmet over spectacles or goggles Welding shield over spectacles or goggles Typical shades, 10 to 14
Gas welding	Optical radiation	Welding goggles Welding face shield over spectacles or goggles Typical shades: Gas welding, 4 to 8 Cutting, 3 to 6 Brazing, 3 to 4
Cutting Torch brazing Torch soldering	Optical radiation	Spectacles Welding face shield over spectacles or goggles Typical shades, 1.5 to 4
Glare (working outside)	Poor vision	Glasses with shaded or special-purpose lenses Face shield over spectacles or goggles

D.2 Eye and Face Personal Protective Equipment Selection Chart for Radiant Energy

TABLE D.2.—EYE AND FACE PERSONAL PROTECTIVE EQUIPMENT SELECTION CHART FOR RADIANT ENERGY (OSHA CFR1910.133)

Operations	Number of 1/32-in. electrodes	Arc current, A	Minimum protective shade
Shielded metal arc welding	Less than 3	Less than 60	7
	3 to 5	60 to 160	8
	5 to 8	160 to 250	10
	More than 8	250 to 550	11
Gas metal arc welding and flux-cored arc welding		Less than 60	7
		60 to 160	10
		160 to 250	10
		250 to 500	10
Gas tungsten arc welding		Less than 50	8
		50 to 150	8
		150 to 500	10
Air carbon arc welding		Less than 500	10
		500 to 1000	11
Plasma arc welding		Less than 20	6
		20 to 100	8
		100 to 400	10
		400 to 800	11
Plasma arc cutting		Less than 300	8
		300 to 400	9
		400 to 800	10
Torch brazing			3
Torch soldering			2
Carbon arc welding			14

D.3 Foot Protection

D.3.1 Foot Protection Classification

Foot protection is classified by ASTM F2413-05 utilizing the following tests:

TABLE D.3.—CLASSIFICATION TABLE TOE CAP COMPRESSION

Classification	Weight, lb	Clearance remaining in toe, in. (Male)	Clearance remaining in toe, in. (Female)
C/50	1750	0.5	0.468
C/75	2500	0.5	0.468

TABLE D.4.—CLASSIFICATION TABLE TOE CAP IMPACT

Classification	Force, ft-lb	Clearance remaining in toe, in. (Male)	Clearance remaining in toe, in. (Female)
I/50	50	0.5	0.468
I/75	75	0.5	0.468

TABLE D.5.—CLASSIFICATION TABLE
METARSAL COMPRESSION

Classification	Weight, lb	Clearance remaining in toe, in. (Male)	Clearance remaining in toe, in. (Female)
MT/50	1750	0.5	0.468
MT/75	2500	0.5	0.468

TABLE D.6.—CLASSIFICATION TABLE
METATARSAL IMPACT

Classification	Force, ft-lb	Clearance remaining in toe, in. (Male)	Clearance remaining in toe, in. (Female)
MT/50	50	0.5	0.468
MT/75	75	0.5	0.468

Foot protection labeling classified by ASTM F2413-05:

- The label uses a specific four line format that identifies the type of footwear and the hazards for which it is designed to provide protection.

  Line 1 -Identifies that the footwear is protective footwear that complies to an ASTM standard with a specific year of issuance. Example: ASTM F 2413 05 (ASTM Standard No.) (Year of issuance)

  Line 2 -Identifies the gender of user and the classifications for impact resistance, compression resistance, and metatarsal impact resistance. For example:

M/I/75/C/75

M	I	75	C	75
Male	Impact Resistant Footwear	Impact Classification	Compression Resistant Footwear	Compression Classification

Lines 3 and 4—Identifies footwear made to offer protection from specific types of hazards.

CD—Identifies protection against conductive hazards as discussed in
EH—Identifies footwear with outsole and heel made of electrical insulation properties
SD—Identifies footwear designed to reduce the accumulation of excess static electricity.
PR—Identifies footwear designed to be puncture resistant.
MT—Identifies footwear designed to be impact resistant to the top of the foot.
CS—Identifies footwear which provides chain saw cut resistance.
DI—Identifies footwear which provides dielectric insulation.

—Shall only be used when more than three sections of this specification apply to any one pair of protective footwear

Example:

Line 1	ASTM F 2413–05	Protective footwear which complies to the performance requirement of F 2413 issued in 2005.
Line 2	M/I/50/C/50	Footwear worn by male worker which has Class 50 impact resistance and Class 50 compression resistance.
Line 3	PR	Puncture resistant footwear
Line 4	CS	Footwear which is chain saw cut resistant

Several options are available for foot protection. Some options follow.

D.3.2 Toe Protection

- Toe armor.—Nonmetallic composite toe cap developed by Wolverine that totally encapsulates the toes, weighs less than steel, and transmits less cold
- Steel toe.—Steel cap that can be heavy and can increase risk of frostbite in cold weather; extends from the sole of the shoe over the toes
- Composite toe.—Nonmetallic toe that weighs less than steel and transmits less cold; extends from the sole of the shoe over the toes

D.3.3 Soles

- DuraShocks soles.—Long-wearing, lightweight outsole with very high shock absorbance and durability (only offered in Wolverine brand of shoes)
- Vibram soles.—Tough, long-wearing soles available on more expensive shoes

D.3.4 Shoe Material

- Kevlar stitching.—Organic fiber manufactured by DuPont with unique characteristics in comparison to other manmade or natural fibers—has high strength; high thermal, puncture, and cut resistance; and maintains resistance to many chemicals and solvents
- Prosafe 2000 Super Leather.—A waterproof material that exceeds U.S. military specifications and is extremely durable and resistant to chemicals, alkalines, dilute acids, automotive fluids, and salts; exceeds NFPA heat and flame resistance requirements for firefighter footwear; remains soft, supple, and durable in harsh environments
- GORE-TEX fabric.—Waterproof membrane that keeps liquids out while allowing air to penetrate; allows feet to breathe, keeping them cooler and dryer
- SympaTex waterproof material.—Waterproof material that keeps feet dry while allowing them to breathe
- Thinsulate.—Lightweight, nonbulky shoe insulation by 3M that keeps feet warm

- Insulated shoes.—Shoes that have an insulating material in the lining to keep feet warm and comfortable in cold environments

D.3.5 Shoe and Shoe Features for Special Hazards

- Electrical hazard shoe.—Shoe designed to protect the wearer from open circuits of 600 V or less under dry conditions
- SD1 (electrostatic dissipating) shoe.—Shoe constructed to reduce the accumulation of static electricity by conducting the body charge to the properly grounded flooring system; footwear falls within 10^6 to 10^8 Ω of resistance, which is generally considered to be acceptable for semiconductor applications
- Puncture-resistant sole.—Stainless steel midsole designed to reduce the hazards of puncture wounds caused by sharp objects that could penetrate the sole
- Metatarsal protection.—Composite or steel plate that entirely covers the top of foot beyond the toes for additional protection

D.4 Hard Hat Classifications

Hardhats are classified by ANSI as follows:

- Class G.—Provides impact and penetration resistance as well as electrical protection up to 2200 V.
- Class E.—Provides impact and penetration resistance as well as electrical protection up to 20,000 V.
- Class C.—Provides only impact and penetration resistance; made of aluminum and will conduct electricity; should not be worn around electrical hazards

Two styles of hard hats are approved for use:

- Type I.—Offers protection from overhead impacts and penetration and limited side impact
- Type II.—Offers protection from overhead and side impacts and penetration (much like a batting helmet)

Only Class G and Class E hard hats are allowed to be used at GRC. Hard hats ordered through the Glenn Supply Management System are rated Class E, Type I. Type II hard hats are permitted to be used but are not currently offered through the system.

D.5 Flame Resistant and Flame Retardant Garments (Clothing)

Garments for protection against flash fire are available from a variety of manufacturers, in a range of items (coveralls, pants, shirts, vests, parkas, rainwear, disposable garments, aprons, etc.). Flame-resistant garments are made out of a variety of either inherently flame-resistant fabrics or fabrics that have been treated with a flame retardant.

Listed below are examples of flame resistant and flame retardant clothing.

Flame Resistant:

- Nomex®
- CXP Nomex®

Flame Retardant Treatments for Fabrics:

- Dale Antiflame ® - Dale Antiflame trademark
- Indura * - Westex Inc. trademark
- Proban ® - Albright and Wilson trademark
- Zirpro ® - Wool Foundation, Nominee Company Ltd. Trademark

- Pyrovatex ® - Ciba-Geigy Corporation Trademark

GUIDANCE ON OBTAINING PERSONAL PROTECTIVE EQUIPMENT

The following information is intended to assist the user in obtaining PPE.

D.6 Safety Glasses (Prescription)

If you need prescription safety glasses they are available through Occupational Medicine Services. The Safety Eyeglass Optician is here on the 2nd and 4th Wednesday of every month from 8:15-11:15. No appointment is necessary. Please bring a completed "Work Request" (NASA C–709) signed by your supervisor with a current fund #, WBS #, and a current prescription. For any other questions regarding safety glasses, contact Occupational Medicine Services at 3-5841 or SHED at 3–8848.

D.7 Gloves, Hard Hats, Nonprescription Safety Eyeware, and Other Personal Protective Equipment

The Glenn Supply Management System(Stock) carries many types of PPE. A listing of PPE available can be found in the "**PPE Quick Reference Guide**". The "**PPE Quick Reference Guide**" can be found on the SHED Web site under the Operations Teams program list, on the Glenn Supply Management System homepage in the header, or by typing PPE into the "Transport box" on the "WING" page. .You can order PPE from the **Glenn Supply Management System**, or you can contact LTID

D.8 Safety Shoes

Periodically, GRC will bring a safety shoe truck to the Center so that employees and contractors can obtain safety shoes. For information on the next truck visit, contact SHED at 3–8848.

Contents

1.0 PURPOSE 2
2.0 APPLICABILITY 2
3.0 BACKGROUND 2
4.0 POLICY 2
5.0 RESPONSIBILITIES 2
5.1 Safety, Health and Environmental Division (SHED) 2
5.2 Facilities and Test Directorate 4
5.3 Contracting Officer's Technical Representative (COTR) 4
5.4 First-Line Supervisor (Supervisor) 4
5.5 Entry Supervisor 5
5.6 Entrant 6
5.7 Safety Attendant 7
5.8 Human Capital Development Branch Chief 8
6.0 REQUIREMENTS 8
6.1 Confined Space Entry Training (*29 CFR 1910.146*) 8
6.2 Medical Evaluation (*NASA NPR 8715.3 and NPR 1800.1*) 8
6.3 Postings (*29 CFR 1910.146*) 9
6.4 Communications *(29 CFR 1910.146)* 9
6.5 Rescue Procedures *(29 CFR 1910.146)* 9
6.6 Permit Process *(GLM–QS–1700.1)* 10
6.7 Confined Space Entry Procedures *(GLM–QS–1700.1)* 11
6.8 Audits and Inspections (*29 CFR 1910.146* and *GLM–QS–1700.1*) 14
7.0 RECORDKEEPING 14
8.0 REFERENCES 15
APPENDIX A.—DEFINITIONS AND ACRONYMS 16
APPENDIX B.—COMPLETION GUIDE FOR CONFINED SPACE ENTRY PERMITS 18
B.1 Identification of Permit-Required Confined Spaces (PRCSs) 18
B.2 Evaluation and Control of Known and Potential Hazards 18
B.3 Communications 20
B.4 Rescue Procedures 20

Chapter 16—Confined Space Entry

NOTE: *The current version of this chapter is maintained and approved by the Safety, Health and Environmental Division (SHED). The last revision date of this chapter was October 2011. The current version is located at http://smad-ext.grc.nasa.gov/shed/pub/gsm/gsm-manual.shtml. Approved by Chief of Safety, Health and Environmental Division.*

1.0 PURPOSE

This chapter provides guidelines for the evaluation of, safe entry into, and work in permit-required confined spaces (PRCSs) at the Glenn Research Center (GRC) Lewis Field and Plum Brook Station.

2.0 APPLICABILITY

This chapter is applicable to all civil servant and contractor employees assigned to GRC sites and to any NASA-controlled, Government-owned facilities associated with GRC.

3.0 BACKGROUND

The Occupational Safety and Health Administration (OSHA) issued the general industry confined-spaces rule (29 Code of Federal Regulations (CFR) **1910.146**, Permit-Required Confined Spaces) on January 14, 1993. The general industry standard requires employers to classify hazardous confined spaces as permit-required confined spaces (PRCSs) and to implement specific procedures to ensure the safety of employees who enter them. The rule contains guidelines for developing a written confined-space program, monitoring atmospheric hazards, training employees, preventing unauthorized employees from entering these spaces, providing for both nonentry and entry rescue, and maintaining records.

The general industry standard specifies a limited exception from some of the PRCS requirements when the only hazard in a confined space is an atmospheric hazard, and ventilation equipment will control the atmospheric hazard at safe levels. It also provides protection to employees from nonatmospheric (e.g., physical) hazards within nonpermit-required spaces, as well as PRCSs. However, the general industry standard does not specifically apply to construction employers. 29 CFR **1910.146** standards shall be applied to construction work at GRC.

4.0 POLICY

All personnel at GRC shall comply with the GRC Confined Space Entry Program unless specifically exempted by the Safety, Health and Environmental Division (SHED) chief.

Standards for the safe work in PRCSs at GRC shall comply with 29 CFR **1910.146**, 29 CFR 1910.268, and 29 CFR 1910.269. Work in PRCSs at GRC is also classified as a hazardous operation as defined in NASA Policy Requirement (NPR) 8715.3, NASA General Safety Program Requirements. All confined spaces at GRC shall be considered PRCSs until otherwise determined by SHED. Spaces identified as PRCSs shall be identified on the Permit-Required Confined Space Inventory maintained by SHED. SHED shall be notified in writing or electronically of any changes to PRCSs or of any new or removed PRCSs.

A Confined Space Working Group shall be established at GRC for the purpose of reviewing and resolving concerns regarding confined spaces.

Verification of these requirements is done by SHED during the periodic and annual document evaluations.

5.0 RESPONSIBILITIES

5.1 Safety, Health and Environmental Division (SHED)

SHED is the designated division within the GRC Safety and Mission Assurance Directorate that is required to develop a safety certification program for entries into PRCSs at GRC (NPR 8715.3 Section 7.4 Requirement **25106**). SHED has the primary responsibility of program development and oversight. The responsibilities include, but are not limited to

NOTE: *Specific duties for the chapter point of contact (POC) are noted in parentheses.*

- Maintain this chapter to meet current regulations and standards in accordance with guidance provided by OSHA, NASA Headquarters, and other organizations providing nationally accepted consensus standards
- Chair the Confined Space Working Group formed from a representative sample of work lead and supervisory personnel
- Evaluate confined spaces to determine if they meet the criteria to be PRCSs
- Maintain an inventory of all identified PRCSs at GRC that include the following items for each PRCS (Chapter POC):
    a. Assigned ID number
    b. Location
    c. Existing and potential hazards
    d. Special considerations for entry, such as high noise or temperature extremes
    e. Minimum personal protective equipment (PPE) for routine entry
    f. Other hazard controls
- Provide assistance to the entry supervisors in the preparation of the Confined Space Entry Permit (CSEP), NASA form **C–199**, and associated documents.
- Review all CSEP requests to ensure they are complete, especially in the areas of hazard identification, control, and mitigation
- Review and return the CSEP to the entry supervisor when the review is complete
- SHED team lead approval is required for routine maintenance and inspection CSEPs greater than 45 days or for construction or other project CSEPs greater than 90 days. Additional controls may be required by SHED. Explanations are required in order to improve future CSEP requests. Explanations are required if the request is rejected. They may be verbal, written, or electronic.
- Perform field inspections of confined space activities to ensure compliance with both NASA and OSHA requirements. These shall be documented in the Safety, Health and Environmental Tracking System (SHEtrak).
- Documentation is critical to the evaluation of a safety program. All documentation shall be reviewed for completeness. Lack of documentation, missing or incomplete documentation, or incorrect documentation on a CSEP shall be considered as significant. Minor problems shall be noted and addressed immediately. Any other significant compliance issues shall be documented in the form of a safety violation.
- Receive and review terminated CSEPs (Chapter POC)
- Terminated CSEPs shall be reviewed to ensure the documentation is both complete and correct. Any deficient CSEPs shall be documented and returned to the entry supervisor to correct. Repeated deficiencies noted for an organization or individual shall be documented and evaluated as potential indicators of required retraining.
- Maintain the canceled CSEPs in accordance with established GRC recordkeeping procedures.

The Medical Director, Occupational Medicine Services, shall participate in determining the requirements for physical and medical examinations including their depth, scope, and frequency to support certification requirements for confined space entry activities.

5.2 Institutional Chief Safety Officer (Code Q)

The Institutional Chief Safety Officer shall perform the annual program evaluation for the Confined Space Entry Program and is responsible for the maintenance of the evaluation documents. This evaluation is performed to ensure compliance with this chapter and current regulations.

5.3 Facilities and Test Directorate

Within the Facilities Division, building managers shall

- Be made aware of the presence of confined spaces, permit-required or not, in their respective buildings and facilities
- Maintain awareness of any changes to the status of confined spaces in their building and facilities

  NOTE: *Notifications to the building managers shall be made prior to modification of an existing confined space, addition of a confined space, or removal of a confined space. This is the responsibility of the project manager assigned to that task.*

- Report any new, removed, or modified confined spaces to SHED
- Ensure personnel in their buildings and facilities are aware of the presence of any PRCS or its changes

Within the Testing Division, facility managers shall

- Be made aware of the presence of confined spaces, permit-required or not, in their respective buildings and facilities
- Maintain awareness of any changes to the status of confined spaces in their building and facilities

  NOTE: *Notifications to the facility managers shall be made prior to modification of an existing confined space, addition of a confined space, or removal of a confined space. This is the responsibility of the project manager assigned to that task.*

- Report any new, removed, or modified confined spaces to SHED
- Ensure personnel in their buildings and facilities are aware of the presence of any PRCS or its changes

5.4 Contracting Officer's Technical Representative (COTR)

The COTR shall

- Ensure contractor employees comply with the requirements of the GRC Confined Space Entry Program as given in this chapter
  - The COTR shall ensure the contractor has been notified of any PRCSs and their associated hazards in areas in which the contractor's employees will be working.
  - Compliance shall include the 2-year requalification training requirement, the medical evaluation, and the annual written authorization requirement for personnel participating in the program.
  - The COTR shall ensure offsite contractors submit documentation certifying their employees are trained, authorized to participate in confined space entry activities, and shall comply with the requirements of the GRC Confined Space Entry Program.
- Assist contractor employees as necessary to maintain control of the entry area for confined space entries
  - This includes assisting in the removal of unauthorized personnel during a confined space entry activity.
  - This may include assisting with the coordination of operating schedules to reduce hazards to personnel.

5.5 Contractor Organizations

Although the general industry standard does not specifically apply to construction employers, 29 CFR **1910.146** standards shall be applied to construction work at GRC.

Contractor organizations shall be responsible for the following:

- Compliance with this chapter.
- Compliance with other applicable standards.
- Providing appropriate monitoring and other safety-related gear for the safe access and work in confined spaces at GRC. Maintenance, calibration, and "bump" test records are required for some of this equipment and must be made available for SHED review.
- Maintenance of records as identified in Section 7.0, Recordkeeping.

5.6 First-Line Supervisor (Supervisor)

The First-Line Supervisor (Supervisor) is the individual who is the day-to-day supervisor of a worker. The supervisor responsibilities include, but are not limited to

- Authorizing personnel, in writing or electronically, to participate in the GRC Confined Space Entry Program (This authorization shall be maintained in by the supervisor or designee and a copy forwarded to SHED.)
- Ensuring authorized entrants and attendants have the appropriate training for their confined space entry responsibilities, including a confined space entry class within the last 2 calendar years
- Ensuring personnel are appropriately trained to perform their assigned duties safely while in a confined space
- Ensuring the worker has an up-to-date annual medical evaluation to safely perform any tasks in the PRCS
- Ensuring personnel are trained in the use of required PPE
- Ensuring personnel use safe work practices and appropriate PPE during all work activities

5.7 Entry Supervisor

The Entry Supervisor is responsible for

- Supervising all individuals and their actions while they are working under a CSEP (The Entry Supervisor is not required to be the working supervisor for a particular person and may be employed by another employer.)
- Identifying the existing and potential hazards of the confined space, including any generated by the work activities
- Developing an operating procedure for entry into and work in the confined space, as necessary
- Initiating the CSEP
- Forwarding the CSEP to SHED review and approval (All supporting documents such as material safety data sheets (MSDSs) and ventilation setup drawings shall be attached prior to the submittal and become part of the CSEP.)
- Signing the CSEP after the requirements of the permit have been read and any questions or concerns have been answered, which signifies the Entry Supervisor's agreement to ensure compliance with the requirements of the CSEP and the GRC Confined Space Entry Program
- Verifying the required annual medical evaluation is current via communications with the First-Line Supervisor
- Ensuring that the authorized entrants and attendants read and sign the CSEP after all questions and concerns have been answered
- Ensuring the approved CSEP is posted in a location near the entrance of the confined space
- Ensuring all required entries on the CSEP are correct and completed in a timely manner

- Ensuring necessary safety precautions have been taken, including properly identifying the PRCS while it is opened to prevent unauthorized entry
- Verifying that the confined space and equipment within the confined space have been appropriately isolated and locked out/tagged out per Chapter **9** of this manual (A copy of the GRC Switching and Lockout/Tagout Record (NASA **C–787**) shall be attached if the lockout/tagout (LOTO) is "local.")
- Ensuring that atmospheric monitoring is conducted and meets the acceptable standards prior to allowing the workers to enter the PRCS
- Verifying all ventilation equipment, monitoring equipment, communications equipment, and rescue equipment is present and operational.
- Ensuring that entry operations are consistent with the terms of the CSEP and that acceptable environmental conditions are present.
- Ensuring that any line-powered electrical equipment used for confined space work utilizes a ground fault circuit interrupter
- Ensuring appropriate barricades and signs are utilized to keep unauthorized persons away from the confined space and to help protect entrants from external hazards
- Ensuring the attendant remains outside of the confined space at all times during the entry operations
- Ensuring appropriate measures are taken to remove unauthorized persons who are in or near the confined space (This may include contacting a COTR or Site Security for assistance.)
- Cancelling the CSEP and terminating entry if acceptable environmental conditions are not present or if the conditions or work procedures described on the CSEP or the operating procedure change
    - SHED shall be notified of the situation.
    - SHED, the Entry Supervisor, and any other required personnel shall evaluate the situation and determine requirements for future entry.
- Once the task is complete and no further entries are required, concluding the entry operation by as closing the confined space and terminating the CSEP
- Forwarding the CSEP to SHED after its termination

5.8 Entrant

The entrants shall

- Complete training in accordance with this chapter
- Sign the CSEP prior to entry to verify that the requirements of the permit have been read, understood, and any questions or concerns have been answered
- Recognize potential hazards, including symptoms and consequences of exposure to the hazards within the PRCS
- Ensure all isolations and LOTO are performed as required by the CSEP and appropriate LOTO procedures
- Inspect the entrance and exit routes and ensure that entry into and exit from the confined space can be made safely
- Use PPE in accordance with the manufacturers' recommendations and training received
- Either the Entrant or Entrant's Representative shall witness or perform the required atmospheric monitoring.
- Enter the PRCS only after ensuring that all the requirements of the CSEP have been met
- Maintain effective and frequent communication with the attendant while in the confined space

- Perform all tasks in a safe manner
- Notify the attendant and exit the confined space whenever any warning sign or symptom of exposure to a dangerous situation is recognized or a prohibited condition is detected
- Exit the PRCS immediately if the attendant orders an evacuation or if danger is perceived
- Ensure all required equipment is removed from the PRCS at the end of the task
- At the end of the task or during breaks, ensure the PRCS is left in a safe condition, preventing the inadvertent entry of unauthorized personnel

5.9 Safety Attendant (Attendant)

The attendants shall

- Complete training in accordance with this chapter
- Sign the CSEP to verify that the requirements of the permit have been read, understood, and any questions or concerns have been answered
- Verify that communications equipment for the attendant and entrant is present and operational, as applicable
- Verify that communications equipment for summoning rescuers is present and operational, as applicable
- When possible, establish an area around the confined space entry point to prevent interference with the entry or the inadvertent entry of unauthorized personnel into the PRCS
- Either the Safety Attendant or the Safety Attendant's Representative shall witness or perform the required atmospheric monitoring.
- Remain immediately outside the entrance to the confined space area the entire time the confined space is occupied and monitor the entry of only one confined space area at a time
    - Two or three confined spaces may be monitored at once provided the entries are very close; the attendant may monitor them simultaneously from a central location, and the work load is sufficiently light to be able to perform the task without placing any entrant at risk.
    - Conversely, more than one attendant may be required at a single PRCS if the tasks being performed are of sufficient complexity or number.
- Recognize potential hazards, including symptoms and consequences of exposure to the hazards, and monitor activities inside and outside the PRCS to ensure that it is safe for the entrants to remain in the confined space
- Be aware of possible behavioral effects of exposure to low oxygen or toxic chemicals
- Instruct entrants to evacuate the confined space immediately if
    - a prohibited condition is detected
    - symptoms or behavioral effects of hazard exposure are detected
    - a situation that could endanger the entrants is detected inside or outside of the confined space
    - the attendant must leave the workstation or cannot effectively and safely perform the duties of an attendant
- Maintain an accurate count of all persons in the confined space as well as the approximate time each entrant has spent within the space
- Maintain effective and frequent communication with the entrants while they are within the confined space
- Summon rescue and other emergency aid as soon as it is determined that the entrants cannot exit or escape from the confined space hazards without assistance (The attendant shall not enter the confined space to

rescue or assist entrants, but may use in-place retrieval methods such as a tripod, retrieval line, and harness.)

- Prevent unauthorized personnel from entering the confined space entry area or interfering with the work in progress
    - Contact the Entry Supervisor if the individual refuses to leave or is affecting the safety of the Entrant(s) or other workers
    - Instruct the Entrant to immediately exit the PRCS if his/her safety has been compromised by the unauthorized personnel

Verification of compliance with these requirements is done by SHED during periodic evaluations and audits.

5.10 Human Capital Development Branch Chief

The Human Capital Development Branch Chief is responsible for maintaining records for civil servant completion of the Confined Space Entry course.

6.0 REQUIREMENTS

6.1 Confined Space Entry Training (*29 CFR 1910.146*)

All GRC employees and contractors involved with entry into or working in confined spaces shall have training in confined space entry. SATERN Course GRC–4R0241 or its acceptable equivalent shall be completed initially and every 2 years thereafter while participating in the Confined Space Entry Program.

The training and review shall familiarize personnel with the following:

- The PRCS found at GRC and how to identify them
- Potential hazards involved with confined space entry, including the signs and symptoms of exposure to these hazards
- Monitoring atmospheric and other conditions within and around the PRCS
- Various methods of mitigating the effects of hazards, including ventilation, PPE, and LOTO
- The procedures that may be required for work within a PRCS
- Responsibilities of the Attendant, Entrant, Entry Supervisor, and SHED
- Methods of communication
- Response procedures for emergencies and abnormal conditions
- Completing the CSEP

The Confined Space Entry training is the primary training for participation in this program. However, the worker is required to also be trained to safely perform assigned tasks while in the PRCS. This includes training in PPE and nonentry rescue equipment.

It shall be the responsibility of the First-Line Supervisor to ensure the worker has up-to-date training and qualifications to safely perform any tasks in the PRCS.

It shall be the responsibility of the Entry Supervisor to verify the required training and qualifications are current via communications with the First-Line Supervisor.

6.2 Medical Evaluation (*NASA NPR 8715.3 and NPR 1800.1*)

The minimum medical evaluation requirements for entry into a PRCS are given in Appendix B of NASA NPR 1800.1. They shall include

- A medical and occupational history

- Physical examination with focus on employee's ability to carry out assigned duties and detection of any disease or abnormality that would make it difficult to work within confined spaces
- Audiogram
- Visual acuity, depth perception, and color vision (or demonstration of employee's ability to see and hear warnings, such as flashing lights, buzzers, and sirens)
- Discretionary tests including ECG, chest x-ray (baseline), urinalysis (dipstick), and pulmonary function
- Job certification with any limitations identified by the medical professional

The frequency of the medical evaluation shall be no more than every 2 years. Specific medical evaluation requirements for respiratory protection or other certifications may require more frequent evaluations to be performed. Medical evaluations for specific exposures may be required.

6.3 Postings (*29 CFR 1910.146*)

PRCSs shall be listed on the Confined Space Inventory as SHED becomes aware of them. Identification numbers are assigned to those listed. These identification numbers are not required to be permanently identified at the confined space point, but it is recommended to do so.

PRCSs shall be identified when they may be opened without controls, tools or keys; when opened, or during an entry. At the GRC, the sign or sticker shall be a white, black, and red danger sign with the wording (or equivalent):

An approved CSEP shall be posted at or near the entry to a PRCS during all entries into that PRCS. A copy may be posted in lieu of an original if there are more entry points into a PRCS.

6.4 Communications *(29 CFR 1910.146)*

One or more methods of communications shall be maintained between the Entrant(s) and Attendant(s). Line-of-sight communication is preferable. However, this is often not possible at GRC because of the many configurations of the PRCSs. Verbal communications are next in preference, either direct voice or radio. This is followed by signaling by sound, rope tugs, or other methods.

Loss of communications shall require the entry to be terminated immediately.

The Entrant shall be considered incapacitated and unable to self-rescue in the event the Entrant does not exit the PRCS in what the Attendant considers to be a timely manner after losing communications. The Attendant shall then initiate the rescue procedures established by the CSEP.

6.5 Rescue Procedures *(29 CFR 1910.146)*

Rescue methods shall be addressed at the time the CSEP is requested.

Rescue planning takes into account the internal configuration of the confined space. Trap points, supports, probes, and other projections may require an entry rescue due to possible further injury by non-entry retrieval methods. Horizontal travel in confined spaces such as pipes, tunnels, and many tanks do not allow for non-entry retrieval methods due to the internal configuration of such spaces. The majority of entries into PRCS' at GRC fall into this category.

Nonentry rescue is the preferred method to be used for removal of an injured or incapacitated worker. This is typically done using a tripod, winch, body harness, and retrieval line.

SHED must concur with the decision not to use a full-body harness with a tripod and/or winch system for the removal of an incapacitated worker. This is typically done where the use is either impractical or may cause harm due to internal configuration of the PRCS and must be addressed at the time the CSEP is submitted for evaluation.

Only trained and designated personnel may perform entry rescues. These personnel are provided by offsite municipal fire departments for both the Lewis Field and Plum Brook sites. The requirement for an entry rescue shall be designated on the CSEP to reduce response time due to the decision-making process.

> NOTE: The Authority Having Jurisdiction (AHJ) (for Fire and Life Safety) is the FD Safety & Occupational Health Manager.
>
> For NASA Centers/facilities, the AHJ shall establish response times to various facility locations to ensure that the fire response arrives in a timely manner in order that appropriate action(s) are taken to mitigate the emergency situation
>
> Annual response assessments from stations to major facilities shall be conducted and recorded to ensure capability to reach the scene in a timely manner.

Any rescue requires the immediate notification of the Emergency Dispatch. Radio is the preferred method for contacting the emergency dispatcher, but a telephone may be used. The internal telephone number is 911 for both sites. Outside telephone numbers, such as when using a cellular telephone, are 216–433–8888 at Lewis Field and 419–621–3222 at Plum Brook.

> ***NOTE:*** *Only the Emergency Dispatch at Lewis Field or Plum Brook shall summon offsite personnel. This is to prevent confusion and delay of response teams as well as maintain the security of both sites.*

6.6 Permit Process *(GLM–QS–1700.1)*

Entry into a PRCS shall require a CSEP (NASA **C–199**) to be approved in advance of the entry. The CSEP is an authorization document that identifies the following:

- The confined space
- Type of work to be done within the space
- Known and potential hazards of the confined space and the work to be performed
- Required protective measures to ensure the safety of the authorized entrants
- Effective and termination dates denoting the authorized periods of entry

The Entry Supervisor is responsible for initiating a CSEP. The NASA **C–199** may be accessed at the NASA Glenn Electronic Forms page and either completed online or printed and completed manually. Completion instructions are provided with the CSEP.

The CSEP and all its associated documents comprise the entry and operating procedure. It is critical for Entry Supervisor to submit all documentation to allow SHED to perform an adequate evaluation of the request.

The CSEP is reviewed and approved by the SHED. A CSEP may have an active time period of up to 1 year. A CSEP request for an active period longer than 45 days for a routine maintenance task or 90 days for a project must be approved by the SHED Construction Team Lead or a designee.

The termination date of the extended CSEPs is typically no later than the end of the calendar year. SHED may require a more detailed operating procedure for all actions taken by the entrants to perform the required tasks within the confined space. Significant changes in job scope, working conditions, or the work procedure require the entry and CSEP to be terminated and a new CSEP developed and approved.

Only members of SHED may extend the termination date of a CSEP. All field copies (for multiple entry points) shall be made using the extended original to show the new termination date. All old copies shall be maintained for inclusion into the document package returned to SHED at the termination of the CSEP.

6.7 Confined Space Entry Procedures *(GLM–QS–1700.1)*

1. The Entry Supervisor reviews the work area and the task scope.

The Entry Supervisor determines if a work area is a confined space, has been or will need to be designated a PRCS, and entry is necessary to perform the desired task. Tasks are to be accomplished without entry into a PRCS or any confined space.

The Entry Supervisor assesses the current and potential hazards of the confined space and the task to be performed. If the work area is not ordinarily designated a PRCS but the work introduces hazards that would downgrade the area to that status, a CSEP shall be required. If there is any question as to this, the SHED shall be consulted.

A CSEP is required if the work area is designated a PRCS, whether permanently or for the task duration.

2. Entry Supervisor initiates the CSEP.

The CSEP form may be completed online and emailed, printed for submittal, or completed by hand for submittal. The Completion Guide for Confined Space Entry Permits provides additional direction and may be printed with the form. As a minimum, the following shall be included on the CSEP prior to review:

- Location of the confined space (This needs to be as specific as possible, especially for a confined space that is not permanently designated as a PRCS.)
- Description of the confined space
- PRCS identification number if it is known (Leave the space blank if there is no assigned number or it is unknown to the Entry Supervisor. Notify SHED if this is a new confined space.)
- Brief but thorough description of the task and task processes (This would include chemical usage methods, hot work, or any other process that may create a hazard for workers. Any special entry or work procedures shall be addressed at this point also. If there is not enough room to document the procedures a separate work procedure may be attached to the CSEP to capture the required information.)
- List of chemicals either currently in or to be brought into the confined space (The MSDS for each chemical and its application shall be attached.)
- List of equipment to be used in the confined space for the task.
- The Hazards Checklist on the CSEP shall be completed along with the mitigation or elimination method for each hazard, including the specific PPE to be used. This includes rescue requirements and methods. The Entry Supervisor requests any changes to the tripod, winch, and fully body harness typically used for non-entry rescue.
- Copy of the Glenn Research Center Switching and Lockout/Tagout Record, NASA **C–787**, or similar LOTO planning document is recommended to be attached when a LOTO will be required for the work to safely proceed (The same procedure applies for an Area Clearance when one is required.)
- Proposed monitoring requirements shall be given (This monitoring is based on the possible exposures to workers and may cause the CSEP to be considered part of the occupational health monitoring records. The Entry Supervisor may request the SHED to determine the required monitoring. An example of this would be if there asbestos removal were taking place in a PRCS. The monitoring data could include a copy of the CSEP work controls and exposure time.)
- Proposed effective and termination dates of the CSEP

The CSEP shall then be submitted to the SHED for review. The Entry Supervisor’s name and telephone number shall be printed on the CSEP request.

3. The CSEP is reviewed by the SHED.

The review process shall be the same for all reviewers. All health and safety concerns shall be addressed regardless of the reviewer's organization. The Entry Supervisor shall be contacted if there are any questions or concerns. The review process steps include the following:

- SHED shall review the confined space and proposed CSEP to determine if one will be required for the task. The CSEP shall be returned to the Entry Supervisor with an explanation if no CSEP will be required.
- All section entries shall either be marked N/A or have an appropriate response.
- Verify the Identification Number if one is given for the PRCS. Investigate if there is a discrepancy between the database information and that given on the CSEP. Notify the Program Lead if the database requires correction.
- Review the work description.
- Review the chemicals and equipment being brought into or resident in the confined space.
- Review the other identified hazards and their associated controls, including PPE. Changes away from the standard non-entry rescue equipment (tripos, winch, full body harness) may approved by SHED with supporting evidence of the reason(s).
- Evaluate or determine the monitoring to be performed, who will perform the monitoring, and how the monitoring records will be maintained. As a minimum, a copy of the monitoring records shall be attached to the original copy of the CSEP for records maintenance.
- SHED shall sign the CSEP if approved. The CSEP with its supporting documents will form the entry and operating procedure for the task.
- The CSEP shall be returned to the Entry Supervisor with attached comments if the CSEP is rejected for insufficient information or inadequate controls.
- The Entry Supervisor reviews the approved CSEP.
    - The Entry Supervisor shall review the CSEP to ensure all changes made SHED are understood. If there are any questions or concerns they shall be addressed to the appropriate group at this time.
    - After review, the Entry Supervisor shall sign the CSEP to indicate understanding of the approved requirements and agreement to enforce them. The CSEP shall not be signed if there are questions or concerns with the CSEP.

4. The Entry Supervisor reviews the approved CSEP with the authorized Entrants and Attendants.

- Only personnel with appropriate training and work knowledge shall be approved for work in a PRCS. It is the Entry Supervisor's responsibility to verify personnel are trained and knowledgeable for the assigned task(s).
- Only the Entry Supervisor may approve Entrants and Attendants. This shall be done prior to a worker's first entry into the PRCS.
- Each individual shall sign the CSEP after an opportunity to have any questions and concerns with the CSEP are resolved.

5. The PRCS is prepared for entry.

- The Entry Supervisor shall ensure that all required ventilation equipment, monitoring equipment, communications equipment, and rescue equipment are present and operational. Entrants and Attendants shall be trained in the proper use of this equipment.
- The Entry Supervisor shall ensure that all required LOTO activities are completed prior to entry whenever possible. These activities are performed for electrical equipment, moving machinery, and piping that may allow hazards to enter the confined space.

NOTE: *Special operating procedures may be required if LOTO is not possible either prior to entry or due to system integrity or operational concerns. This shall be addressed at the time of submittal to the SHED to ensure personnel safety in the PRCS.*

- A Hot Work Permit is secured for any welding, grinding, or spark producing work in accordance with Chapter **28** of the Glenn Safety Manual. This shall be designated on the CSEP.

NOTE: *CO^2 fire extinguishers shall not be used in or adjacent to confined spaces without the written concurrence of the SHED.*

- All electrical equipment has a ground fault circuit interrupter at the power source, unless the power source is an ungrounded portable generator, an ungrounded battery source less than 28 volts, or an ungrounded isolation transformer of less than 28 volts.
- The Entry Supervisor has ensured that electrical equipment used inside the confined space is properly insulated and grounded.
- A barrier and warning sign shall be placed outside the confined space entrance to ensure unauthorized personnel do not enter the confined space or interfere with the workers.
- Monitoring shall consist of oxygen content in percent by volume, flammable or explosive gases expressed in percent of lower explosive limit (LEL), carbon monoxide (CO) expressed in parts per million (ppm), and hydrogen sulfide (H2S) expressed in ppm. Monitoring shall be performed in the area(s) of the PRCS in which the Entrants will be passing through or working. Minimum acceptable limits, with SHED approval, are
  - Oxygen content between 19.5 and 23.5% by volume
  - Less than 10% LEL
  - Less than 10 ppm CO
  - Less than 10 ppm H_2S
- Normal air content is the goal for GRC. Anything outside the range of normal air concentrations shall be considered unacceptable until investigated by SHED. This range is
  - Oxygen content between 20.5 and 21.5% by volume
  - 0% by volume LEL
  - 0 ppm CO
  - 0 ppm H_2S
- SHED shall be notified immediately if the air sample results are unacceptable. With SHED approval, the PRCS may be ventilated and retested. The period of ventilation prior to retest will vary by size of the Space and the hazard detected. Continuous ventilation may be required. If the results are unsatisfactory after ventilation, the task shall be evaluated with respect to the identified hazard and appropriate measures taken. A new CSEP shall be submitted with the new controls detailed and further investigation as to the source of the contaminant.
- The attendant is positioned outside the confined space entrance. The attendant shall maintain an entry log for the Entrants to track time actually in the PRCS whenever exposure monitoring is performed.

6. Entry into the PRCS

The following actions shall be performed immediately upon entry into the PRCS:

- The communication system between the entrant and the attendant shall be tested to confirm its effectiveness. Communication between the entrant and the attendant shall be maintained to ensure the safety of the entrant.
- An alternate communications method should be available whenever possible. This will prevent the action of an unneeded non-entry or entry rescue.

- Working conditions shall be verified to be those noted on the CSEP. If any of the critical conditions (e.g., configuration, procedures, materials, or required equipment) specified on the Entry Permit change or if the nature of the work to be performed in the confined space changes, the entrants shall exit the confined space. A new CSEP may be required prior to reentry.
- Note any changes to the PRCS for report to SHED.
- Any new conditions or information not on SHED's list shall also be reported to SHED.

7. Confined Space Entry Permit Termination

The following actions shall be performed when the work within the confined space has been completed:

- All work materials and equipment shall be removed when no longer required in the PRCS.
- The attendant shall verify that all entrants have exited the confined space.
- The PRCS shall be closed or barricaded and posted to prevent unauthorized entry.
- If all work is completed, the Entry Supervisor shall ensure the equipment is restored to operational readiness.
- If appropriate, the Entry Supervisor shall terminate the CSEP and forward it and all associated documentation to the SHED.

6.8 Audits and Inspections (*29 CFR 1910.146* and *GLM–QS–1700.1*)

- SHED shall monitor confined space activities to ensure compliance with this chapter. SHEtrak inspections are the primary method of documenting this monitoring, but targeted audits may also be performed and documents. Significant discrepancies shall be documented and forwarded to the appropriate SHED Lead(s).
- Results of all Confined Space Program Audits shall be forwarded to the Institutional Chief Safety Officer.
- Confined Space Program documents shall be reviewed annually by SHED for compliance with this chapter. The preferred method is for the documents to be reviewed immediately upon receipt by SHED. All entries shall be complete and accurate. Any discrepancies require the Entry Supervisor to correct the CSEP and supporting documents in such a manner as to not obscure the act of correction. The corrections shall be initialed and dated by the person performing the correction.
- Results of the Confined Space Program document reviews shall be forwarded to the Institutional Chief Safety Officer for use in the annual evaluation of the Confined Space Entry Program.

The Confined Space Entry Program shall be evaluated annually by the Institutional Chief Safety Officer. The evaluation shall be based upon those reference documents noted in Section 8 and the requirements of this chapter.

Routine verification of compliance with these requirements is done by SHED during periodic evaluations and audits. Site and external auditors provide another level of assurance that SHED inspectors perform adequately.

7.0 RECORDKEEPING

- Confined Space Entry Permit, **C–199**, and supporting documentation.—Terminated permits are maintained by SHED for a minimum of 3 years. Active permits are maintained by the requesting organization.
- Calibration records for testing and monitoring equipment.—Maintained by the appropriate organization(s) for a minimum of 3 years.
- Training records.—Maintained by the Human Capital Development Branch and/or Contractor Organizations.
- Medical Evaluation Records (baseline and others).—Maintained by Occupational Medicine Services and/or Contractor Organizations.

- Exposure Assessment Records shall be maintained by the SHED Ops, PBS Team, or Contractor Organizations, as appropriate.
- Confined Space Audit Results – Maintained by Institutional Chief Safety Officer as support documentation for the Annual Program Evaluation.
- Annual Program Evaluation – Maintained by the Institutional Chief Safety Officer.
- Annual Evaluation of Rescue Services – Maintained by the FD Safety & Occupational Health Manager.
- Safety, Health and Environmental Tracking System (SHEtrak) inspections and findings shall be maintained in the SHEtrak system.

Routine verification of compliance with these requirements is done by SHED during periodic evaluations and audits. Site and external auditors provide another level of assurance that SHED inspectors perform adequately.

8.0 REFERENCES

Document number	Document name
29 CFR 1910.146	Permit-required confined spaces
29 CFR 1910.268	Telecommunications
29 CFR 1910.269	Electrical Power Generation, Transmission, and Distribution
NPR **1800.1**	NASA Procedural Requirement, NASA Occupational Health Program Procedures
NPR **8715.3**	NASA Procedural Requirement, NASA General Safety Program
GLM–QS–1700.1	NASA Glenn Safety Manual, Chapter **9**, Lockout/Tagout

APPENDIX A.—DEFINITIONS AND ACRONYMS

Acceptable environmental conditions.—The conditions that must exist in a confined space to allow entry and to ensure that authorized entrants can safely enter into and work within the space.

Attendant.—An individual stationed outside the confined space to monitor and control the PRCS area.

Entrant.—A trained individual whose work assignment requires entry into a PRCS.

Code of Federal Regulations (CFR)

Confined space.—A space that has each of the following three characteristics:

- Is large enough and so configured that an employee can bodily enter and perform assigned work
- Has limited or restricted access for entry or exit, making it difficult for someone to enter or to rescue an individual in case of emergency
- Is not designed for continuous worker occupancy

Confined spaces include, but are not limited to, storage tanks, pits, vats, reaction vessels, ventilation and exhaust ducts, boilers, silos, sewers, manholes, tunnels, trenches, underground utility vaults, and pipelines.

Confined Space Entry Permit (CSEP) (NASA C–199).—A printed document that authorizes entry and work by personnel into a confined space. The CSEP lists the hazards and associated controls for these hazards for the entry.

Contracting Officer's Technical Representative (COTR)

Engulfment.—The surrounding and effective capture of a person by a liquid or finely divided solid substance.

Entry.—The action by which a person passes through an opening into a confined space and any ensuing work in that space. Entry is considered to have occurred as soon as any part of the entrant's body breaks the plane of any opening into the confined space. **Entry Supervisor**.—The designated individual who has charge of the entry into the confined space. The Entry Supervisor is responsible for ensuring the safety and entry requirements specified in the CSEP are met, authorizing the entry, overseeing entry operations, and terminating the CSEP.

Glenn Research Center (GRC)

Hazardous atmosphere.—An atmosphere that may expose employees to the risk of death, incapacitation, injury, acute illness, or impairment of one's ability to self-rescue from one or more of the following causes:

- A flammable gas, vapor, or mist in excess of 10 percent of the lower explosive limit (LEL)
- An airborne combustible dust at a concentration that obscures vision at a distance of 5 feet or less
- An atmospheric oxygen concentration below 19.5 percent or above 23.5 percent
- An atmospheric concentration of any substance for which exposure could occur in excess of its permissible exposure limit (PEL) or threshold limit value
- Any atmospheric condition recognized as immediately dangerous to life or health

Hot work.—All heat-, spark-, or flame-producing operations. This is further defined Chapter **28** of the Glenn Safety Manual.

Immediately dangerous to life or health.—Any condition that poses an immediate or delayed threat to life or that could cause irreversible adverse health effects or that would interfere with an individual's ability to escape unaided from the confined space.

Isolation (Lockout/Tagout).—A process by which the confined space and systems within the confined space are removed from service, and protected against the inadvertent release of energy or material. This shall be performed in accordance with Chapter **9** of the Glenn Safety Manual.

Lower explosive limit (LEL).—The minimum concentration (usually expressed in percent by volume at sea level) of a flammable gas or vapor in air that will ignite if an ignition source is present. Lower flammable limit (LFL) is an equivalent term used by some professions.

NASA Procedural Requirement (NPR)

Occupational Safety and Health Administration (OSHA)

Oxygen-deficient atmosphere.—An oxygen concentration of less than 19.5 percent by volume.

Oxygen-enriched atmosphere.—An oxygen concentration greater than 23.5 percent by volume.

Permissible exposure limit (PEL).—The maximum 8-hour time-weighted-average (TWA) concentration of an airborne contaminant to which an employee may be exposed, specified in 29 CFR 1910, Subpart Z.

Permit-Required Confined Space (PRCS).—A confined space which has one or more of the following characteristics:

- Contains or has the potential to contain a hazardous atmosphere (e.g., oxygen-deficient, oxygen-enriched, flammable, explosive, toxic, or otherwise harmful)
- Contains a material that has the potential for engulfing an entrant
- Has an internal configuration such that an entrant could be trapped or asphyxiated because of inwardly converging walls or a floor that slopes downward and tapers to a smaller cross section
- Contains any other recognized serious safety or health hazard (e.g., need for LOTO provisions, need for personal protective equipment)

Personal protective equipment (PPE)

Point of contact (POC)

Safety, Health and Environmental Division (SHED)

Threshold limit value (TLV).—The time-weighted-average (TWA) concentration for a normal 8-hour workday and a 40-hour workweek to which nearly all workers may be repeatedly exposed, day after day, without adverse effects.

APPENDIX B.—COMPLETION GUIDE FOR CONFINED SPACE ENTRY PERMITS

B.1 Identification of Permit-Required Confined Spaces (PRCSs)

Personnel in the SHED Construction and/or Operations Teams are responsible for the determination of a PRCS. The designation may be permanent or specific for a task or work procedure.

SHED shall maintain an inventory of all permanently designated PRCSs for GRC. A copy of this inventory shall be accessible through the InfoBase System.

Whenever practical, the PRCSs within a building shall be labeled with the assigned Confined Space ID number. This number shall be either the system number of the space entry point or have the building ID format.

- At Lewis Field, this is the three-digit building number, followed by a dash, followed by a three-digit Confined Space number. For example, Building 12, Confined Space number 1 would be designated 012–001. It may be impractical for some PRCSs to be permanently labeled. The inventory list shall be used to determine the number in these cases.
- At Plum Brook, the format is 90 with the first digit of the building number followed by a dash, followed by the next last three digits of the building designation, followed by a dash, followed by a two-digit Confined Space number.

The description and location of the confined space needs to be accurate for a valid evaluation by SHED.

Activities in adjacent areas may not be readily apparent to persons unfamiliar with the building or area containing the confined space. The Entry Supervisor should discuss planned activities with the Building Manager or other knowledgeable person if this is the situation.

A confined space may become a PRCS due to introduced hazards or abnormal conditions outside the confined space. This situation does not require the permanent identification of the confined space as a PRCS, but it does require the use of a CSEP and short-term designation as a PRCS.

Barricades or barriers should also be used to designate boundaries around opened PRCSs and to prevent unauthorized entry into a PRCS or interference with workers performing a task under a CSEP.

Determinations of confined space status shall be documented and maintained by SHED for a minimum of 1 year and then may be discarded at the discretion of the program point-of-contact. These shall be used in the annual evaluation of the Confined Space Entry Program.

B.2 Evaluation and Control of Known and Potential Hazards

The Entry Supervisor shall evaluate the hazards associated with the task, the confined space, and the adjacent areas. Tasks being performed outside the confined may have a dramatic effect on the conditions inside. Those hazards listed below are a starting point for evaluation, not a full list. The evaluation shall include not only the hazard but the source of the hazard. Controls associated with hazards shall start with removal or prevention of the hazard and then go to mitigation if that is impractical or not possible.

1. **Types of hazards**
   - Hazardous atmospheres
     - Flammable/explosive
     - Toxic
     - Irritant or corrosive
     - Oxygen-deficient or oxygen-enriched
   - Physical hazards
     - Temperature
     - Chemicals

  - Noise
  - Vibration
  - Electrical and mechanical equipment
- Other hazards
  - Steam leaks
  - Radiation
  - Communication problems
  - Inadequate illumination

2. Control of chemical hazards

The MSDS for each chemical resident within or introduced into the confined shall be attached to the CSEP prior to submittal to the SHED. Ensure the MSDS is appropriate for the way the chemical will be used or treated. The quantity of or manner in which the chemical is used may change the identified hazards and controls. Hazards and control measures associated with the chemical are given on the MSDS.

3. Personnel protective equipment

The recommended PPE and handling methods are given on the MSDS. PPE such as gloves or respirators cannot be automatically used as the first line of defense against hazards. PPE may be used only if engineering controls and administrative controls do not eliminate the hazard. PPE is only intended to provide supplemental protection to proper engineering and administrative controls.

PPE for nonchemical hazards is evaluated in a manner similar to that for chemical hazards.

The Entry Supervisor shall recommend the PPE to be used on the CSEP. This selection is approved or adjusted by SHED during the review process.

4. Atmospheric and chemical monitoring

Entry into a PRCS is prohibited until the atmospheric monitoring has been completed for oxygen level, LEL %, CO, H2S, and any toxic chemicals designated on the CSEP. Oxygen level shall be determined prior to or concurrent with LEL determination.

NOTE: *Continuous monitoring is recommended for all confined space entries. The Entry Supervisor shall justify the use of intermittent monitoring if that is desired.*

Trained individuals shall perform the initial daily monitoring for oxygen content, flammable gases, carbon monoxide, and hydrogen sulfide. If the individual conducting air testing must enter the confined space in order to complete the atmospheric testing, the individual shall “lead” with the instrument and terminate the confined space entry at the first indication of unsafe atmospheric conditions.

Toxic chemicals monitoring shall be performed or directed by the SHED Operations Team, whether airborne or surface contamination.

All air monitoring results shall be documented and attached to the CSEP. A copy of the monitoring records shall also be maintained in the individuals’ monitoring files if toxic chemicals monitoring is performed.

Surface monitoring of contamination or chemicals shall be documented and those results attached to the CSEP.

5. Respiratory protection

SHED shall review the use and method of respiratory protection proposed by the Entry Supervisor. A knowledgeable member of the SHED Operations Team or the SHED Plum Brook Team shall be the deciding authority if there are any concerns with the proposed equipment or method.

Respiratory protection is a form of PPE. Implementation of engineering or administrative controls before PPE to control or mitigate the hazard is required whenever practical.

6. Ventilation

NOTE: *Ventilation systems shall be designed to protect workers in the surrounding areas from the exhaust.*

The space shall be ventilated to eliminate or reduce the hazard if atmospheric monitoring indicates airborne contaminants to be at or above the PEL or immediately hazardous to life or health. SHED shall review the use and method of ventilation proposed by the Entry Supervisor. A knowledgeable member of the SHED Facility Team or the SHED Plum Brook Team shall be the deciding authority if there are any concerns with the proposed equipment or method. Removal of the contaminant source is the preferred control with ventilation as a viable alternative.

If an immediately hazardous to life or health condition exists after ventilation, the entry shall be terminated and the situation investigated. A specific procedure addressing the situation, a new CSEP, and approval from the Chief of the SHED will be required for the work to proceed in that PRCS.

Airflow measurements may be required prior to each entry to ensure adequate ventilation. If the confined space is categorized as immediately dangerous to life and health, audible and/or visual warning devices shall be required to indicate ventilation failure.

Ventilation equipment (if required) shall be explosion-proof and comply with NFPA 70 and Section 500 of the National Electric Code (NEC) when combustible or flammable gases or vapors are present in levels of greater than 50% of the LEL. In addition, the bonding requirements of NEC Section 250 shall be met.

When elevated levels of combustible dusts or ignitable fibers or particulates may be present, ventilation equipment shall comply with Sections 502 and 503 of the NEC.

B.3 Communications

Communications shall be maintained between entrants and attendants. The method(s) to be used shall be designated in the CSEP. If voice communications are inadequate due to noise, distance, personal protective equipment, or other conditions, an alternate communication system such as visual contact, rope signals, radios, light, or other alarm devices shall be used.

Loss of communications constitutes a valid reason for terminating the entry. Modification of the CSEP by the SHED and the Entry Supervisor shall be required if the initial communications method(s) is inadequate.

Communications with the emergency response organizations shall be addressed. The contact method for an emergency shall be determined and addressed in the communication section of the CSEP.

B.4 Rescue Procedures

Rescue methods shall be addressed at the time the CSEP is requested.

Rescue planning takes into account the internal configuration of the confined space. Trap points, supports, probes, and other projections may require an entry rescue due to possible further injury by non-entry retrieval methods. Horizontal travel in confined spaces such as pipes, tunnels, and many tanks do not allow for non-entry retrieval methods due to the internal configuration of such spaces. The majority of entries into PRCS' at GRC fall into this category.

Non-entry rescue is the preferred method to be used for removal of an injured or incapacitated worker. This is typically done using a tripod, winch, body harness, and retrieval line. Only trained and designated personnel shall perform entry rescues. Offsite municipal fire departments provide the Entry Rescue Teams for both the Lewis Field and Plum Brook sites. The requirement for an entry rescue shall be designated on the CSEP to reduce response time. Any rescue requires the immediate notification of the Emergency Dispatch. Radio is the preferred method for contacting the emergency dispatcher, but a telephone may be used. The internal telephone number is 911 for both sites. Outside telephone numbers, such as when using a cellular telephone, are 216–433–8888 at Lewis Field and 419–621–3222 at Plum Brook.

NOTE: *Only the Emergency Dispatch at Lewis Field or Plum Brook shall summon offsite personnel. This is to prevent confusion and delay of response teams as well as maintain the security at both sites.*

Contents

1.0 PURPOSE 2
2.0 APPLICABILITY 2
3.0 BACKGROUND 2
4.0 POLICY 2
5.0 RESPONSIBILITIES 2
5.1 Contracting Officer 2
5.2 Project Manager 3
5.3 Contracting Officer's Technical Representative (COTR) 3
5.4 Quality Assurance, Facilities Division 4
5.5 SHED Construction Team 4
5.6 SHED Plum Brook Team 4
5.7 SHED Operations Team, Waste Management 4
5.8 Authority Having Jurisdiction (AHJ) 4
5.9 Construction Contractors, Subcontractors, Maintenance Contractors, and Prime Contractors 4
5.10 Building Manager 5
5.11 Office of Protective Services 5
5.12 Chief, Project Management Branch 5
6.0 REQUIREMENTS 5
6.1 Construction of Facilities (CoF) Design (*NPR 8715.3, NPR 8719.7 and NPD 8820.2*) 5
6.2 Site-Specific Health and Safety Plan (*NPR 8715.3 and NPR 8820.2*) 5
6.2.1 Contractor Requirements 5
6.2.2 SHED Requirements 6
6.2.3 COTR Requirement 6
6.3 Hazard Communication (*29 CFR 1926*) 6
6.3.1 Contractor Requirements 6
6.3.2 SHED Requirement 6
6.3.3 COTR Requirement 6
6.4 Occupational Safety and Health Administration (OSHA) Competent Person Verification (*29 CFR 1926*) 6
6.5 Contractor Training Requirements (*29 CFR 1926*) 6
6.6 Inspection (*NPR 8715.3 and NPD 8820.2*) 7
6.6.1 Contractor Inspections 7
6.6.2 SHED Inspections 7
6.6.3 COTR and/or Quality Assurance Technician Inspections 7
6.7 Emergency Response Procedures 7
6.7.1 Glenn Research Center 7
6.7.2 Plum Brook Station 8
6.8 Mishap Investigation (*NPR 8621.1*) 8
6.9 Signs, Signals and Barricades (*29 CFR 1926*) 8
6.10 Waste Management 8
6.11 Project Acceptance (*NASA–STD–8719.9 and NPR 8715.3*) 8
7.0 RECORDS 8
8.0 REFERENCES 8
APPENDIX A .—DEFINITIONS AND ACRONYMS 10
APPENDIX B .—CoF DESIGN REVIEW PROCESS 11
APPENDIX C .—HASP SUBMITTAL PROCESS 12
APPENDIX D .—SHORT-DURATION HASP TEMPLATE 13
APPENDIX E .—MINIMUM CONTENT FOR A SITE-SPECIFIC HEALTH AND SAFETY PLAN 15

Chapter 17—Construction Safety and Health

NOTE: *The current version of this chapter is maintained and approved by the Safety, Health and Environmental (SHED) The last revision date of this chapter was May 2010. The current version is maintained on the Glenn Research Center (GRC) intranet at http://smad-ext.grc.nasa.gov/shed/pub/gsm/gsm-manual.pdf. Approved by Chief of Safety, Health and Environmental Division.*

1.0 PURPOSE

This chapter describes policies and minimal safety and health requirements for all construction activities at the NASA Glenn Research Center (GRC) at Lewis Field and Plum Brook Station (PBS). All persons performing construction activities shall ensure that work be performed in a safe and healthful manner. All persons engaged in construction activities shall meet or exceed the minimum safety and health requirements defined herein and shall comply with all other Federal, State, and local codes and standards where required, including NASA Agency and Center policies and/or procedures.

2.0 APPLICABILITY

The responsibilities and requirements as set forth in this chapter apply to all GRC and PBS employees, all NASA contractors and contractor employees, maintenance contractors, other Government agency employees, visitors, and other organizations who perform construction activities within the confines of GRC. This chapter also applies to supply contracts requiring construction services, including construction activities required for the execution of research and development programs.

3.0 BACKGROUND

Construction work includes many inherently hazardous tasks and conditions, such as work at height, excavations, noise, dust, power tools and equipment, confined spaces, and electricity. Construction has about 8 percent of U.S. workers, but 22 percent of the fatalities—the largest number of fatalities reported for any of the industry sectors. Therefore, the policies set forth in this chapter were developed to help reduce the level of risk for construction work.

4.0 POLICY

This document describes the responsibilities and requirements for construction activities at GRC. The authority for the procedures, responsibilities, and requirements in this chapter are derived from the following:

- Title 29 Code of Federal Regulations 1926: Safety and Health Regulations for Construction
- NASA Procedural Requirement (NPR) 8820.2: Facility Project Requirements
- NASA Procedural Directive (NPD) 8820.2: Design and Construction of Facilities
- NPR 8715.3: General Safety Requirements
- NPR 8719.7: Facility System Safety Guidebook

5.0 RESPONSIBILITIES

5.1 Contracting Officer

The contracting officer shall be responsible for the following:

- Enforcing contractor compliance with all Federal, State and local codes and regulations and compliance with all NASA Agency and Center policies
- Ensuring that the Safety, Health and Environmental Division (SHED) has reviewed all construction of facilities (CoF) project designs prior to the bid proposal process
- Ensuring that contractors submit a health and safety plan (HASP) as part of the contract and provide a copy to SHED for acceptance; ensuring that the plan is reviewed and accepted prior to Notice to Proceed with field work being issued

- Ensuring that all construction contracts contain appropriate clauses related to safety
- Coordinating any matters regarding proposed deviations in safety requirements with the SHED construction team lead
- Establish safety performance, where appropriate, as an element to be evaluated in contracts

5.2 Project Manager

The Project Manager shall be responsible for the following:

- Coordinating with SHED to develop safety requirements and objectives for efforts to be contracted and advising the contracting officer of any specific safety concerns or issues related to contract performance
- Assuring that the authority having jurisdiction (AHJ) and SHED review all proposed NASA-owned, controlled, or operated facility configuration changes and construction work change orders that have a potential fire protection or safety impact
- Ensuring that NASA Procedural Requirements are properly considered and incorporated in all project designs and implementation
- Developing safety requirements and objectives that are clearly delineated in the specifications; providing specific tasks to the contracting officer for incorporation in the contract as required
- Including SHED in the design process at the beginning of project planning and design through the preparation of drawings and specifications
- Participating in the final safety inspection of the work area prior to the completion of the contract and occupancy by personnel

5.3 Contracting Officer’s Technical Representative (COTR)

The COTR shall be responsible for the following:

- Providing oversight for construction activities and ensuring that construction contractors comply with all safety and health requirements
- Participating in the design process
- Ensuring that a preconstruction conference is scheduled and conducted and that the results are documented
- Conducting regular construction meetings
- Providing SHED with a copy of the contractor's written site-specific HASP for acceptance prior to issuance of Notice to Proceed with field work
- Coordinating with NASA operations personnel all activities involving hazardous work area access, mechanical and electrical equipment shutdowns, and certification or operational testing to ensure safety of construction contractors and adjacent NASA employees and support service contractors
- Enlisting the support of SHED in ensuring a safe work place and compliance with the Glenn Hazard Communication Program throughout the performance of the contract
- Coordinating and participating in contractor construction site inspections
- Ensuring that any final inspection include a representative from SHED
- Providing, upon request, a copy of the contractor’s daily inspection report to SHED
- Ensuring that when significant changes to contracts occur which impact facility safety that SHED has reviewed the proposed changes
- Exercising stop work authority if required.

5.4 Quality Assurance, Facilities Division

The quality assurance technicians provide oversight of the contractor at the construction site and verification that the contractor is adhering to the accepted task specific health and safety plan.

5.5 SHED Construction Team

The SHED construction team shall perform construction safety compliance oversight for all construction activities planned or performed at GRC, including the following:

- Participating in onsite visits and pre-bid conferences to ensure that potential bidders understand safety provisions
- Assisting the contracting officer in evaluating the performance and safety record of prospective contractors
- Conducting reviews and providing technical guidance throughout the design process, beginning during the project planning and design through the preparation of drawings and specifications
- Assisting the contracting officer in evaluating the performance and safety record of prospective contractors
- Assisting the contracting officer as appropriate to apply any special safety provisions to grants or cooperative agreements
- Providing technical advice on matters involving construction safety
- Performing safety, health, and environmental compliance inspections on active construction projects

5.6 SHED Plum Brook Team

The SHED, PBS team shall perform construction safety compliance oversight for all construction activities planned or performed at PBS.

- Participating in onsite visits and pre-bid conferences to ensure that potential bidders understand safety provisions
- Assisting the contracting officer in evaluating the performance and safety record of prospective contractors
- Conducting reviews and providing technical guidance throughout the design process, beginning during the project planning and design through the preparation of drawings and specifications
- Assisting the contracting officer in evaluating the performance and safety record of prospective contractors
- Assisting the contracting officer as appropriate to apply any special safety provisions to grants or cooperative agreements
- Providing technical advice on matters involving construction safety
- Performing safety compliance inspections on active construction projects

5.7 SHED Operations Team, Waste Management

Waste Management within the SHED operations team is responsible for providing technical guidance and oversight on waste management, recycling, and waste reduction, including waste manifests.

5.8 Authority Having Jurisdiction (AHJ)

The authority having jurisdiction is responsible for formally monitoring fire protection compliance efforts during the various phases of the projects. Following a review and acceptance of fire/life-safety documentation applicable for a given facility, the AHJ shall issue an occupancy permit.

5.9 Construction Contractors, Subcontractors, Maintenance Contractors, and Prime Contractors

As per NPR 1800.1, construction contractors, subcontractors, maintenance contractors, and prime contractors engaged in construction activities shall meet or exceed the minimum safety and health requirements and shall comply with all other Federal, State, and local codes and standards where required, including NASA Agency and Center policies and/or procedures. Where there is any discrepancy in the regulations, the more stringent rule shall apply.

5.10 Building Manager

The building manager shall

- Serve as the point of contact in the building between occupants and outside organizations
- Provide pertinent information related to building activities, locations of rooms and personnel, etc.
- Serve as the point of contact for area clearance work that affects the building and notify building occupants of outages (electric, construction activities, water, steam, chilled water, sewer, etc.)
- Report to SHED any construction activities occurring without an authorized site-specific health and safety plan.

5.11 Office of Protective Services

Ensure that NASA contractors and contractor employees, other Government agency employees, visitors, and other organizations that perform construction activities within the confines of GRC, including PBS, have received the proper badges.

5.12 Chief, Project Management Branch

Ensure that the project managers comply with policies and procedures that are outlined within this chapter.

6.0 REQUIREMENTS

Construction safety requirements have been established to protect the life, health, and physical well-being of all NASA Glenn Research Center employees, contractor employees, visitors, and others; to ensure the safety of the public from hazards, incidents, and/or operations from construction activities; to prevent damage of property, supplies, and equipment; and to prevent accidents that might interrupt work, thereby delaying NASA programs and/or negatively affecting NASA property.

6.1 Construction of Facilities (CoF) Design (*NPR 8715.3, NPR 8719.7 and NPD 8820.2*)

The CoF project managers shall include SHED in the design process at the beginning of project planning and design through the preparation of drawings and specifications. In addition, the AHJ shall be involved when the project has fire protection /life safety implications. The involvement of SHED during the project planning and design process shall be formally documented at the following two points:

- Signatures of the SHED construction team lead and SHED facilities team lead on the Project Requirements document
- Signatures on the Facilities Division Project Management Safety, Health and Environmental Document Management form.

A CoF project design will not issue a Request for Proposal or an Invitation for Bid without the above referenced documentation. This process is further illustrated in Appendix **B**.

6.2 Site-Specific Health and Safety Plan (*NPR 8715.3 and NPR 8820.2*)

6.2.1 Contractor Requirements

- Shall submit a written site-specific HASP to the COTR before any construction work is performed at the GRC and PBS. The contractor or the COTR shall submit the HASP to SHED for acceptance (see Appendix B for a flow chart of the HASP review and approval process). A Notice to Proceed with construction activities shall not be granted unless the HASP has been accepted. If the prime contractor is writing the HASP for a subcontractor, then the subcontractor shall submit documentation on company letterhead indicating that they concur with the HASP and are able to comply with all controls and personal protective equipment requirements as specified by the prime contractor.
- Identify in the HASP hazardous operations and chemicals related to the work to be performed. The plan shall also identify in writing the methods and procedures that will be used to ensure a safe and healthful work environment and the way the contractor intends to protect both the health and safety of NASA and contractor employees and Government property and equipment. The contractor shall also provide current

material safety data sheets (MSDS) for all hazardous materials and chemicals brought onsite. The contractor shall provide a list of the chemicals that will be brought onsite to the GRC chemical management team for approval (see Environmental Programs Manual). Hazardous Waste Operations and Emergency Response (29 CFR 1910.120) has specific requirements for HASPs. The HASP content outline in Appendix **E** provides further guidance on the content of site-specific HASP. Appendix **D** provides an example of a HASP for a short-duration task.

- Shall designate, in writing for each contract, a site health and safety officer and/or safety manager who will ensure compliance with contract safety and health requirements
- Shall provide a written and/or electronic copy of the contractor's corporate health and safety plan in addition to the site-specific HASP to SHED
- Shall include, to the extent specified in the contract, safety responsibilities in subcontracts (All prime contractors shall monitor their subcontractors' activities to ensure compliance with all required safety and health regulations. This compliance shall be documented in writing.)
- Shall coordinate with the COTR all operations that involve safe access to hazardous work areas, shutdowns of mechanical and electrical equipment, testing, and interaction between the contractor and NASA operations personnel
- Shall provide fire extinguishers and other safety equipment as required, and ensure that employees be trained in its proper use (upon request, provide documented proof that employees have been trained)

6.2.2 SHED Requirements

Review, accept, or comment on the contractor HASPs for proposed onsite construction activities (within 5 days for initial submittal; 2 days for resubmittals). Appendix **C** is a flow chart that illustrates the HASP review and acceptance process.

6.2.3 COTR Requirement

Reviews the contractor-submitted HASP and verifies that it accurately depicts the project scope of work; reviews requested contractor resubmittals to verify that SHED comments have been addressed. The COTR shall not issue the Notice to Proceed with field work until a HASP has been accepted by both SHED and the COTR.

6.3 Hazard Communication (*29 CFR 1926*)

6.3.1 Contractor Requirements

Shall ensure that MSDS for each chemical stored at the construction site are located at the site and are available upon request (see Environmental Programs Manual)

6.3.2 SHED Requirement

Shall review and accept proposed chemicals and materials to be brought onsite by contractors and shall provide contractors with MSDS for chemicals and materials owned by NASA at the construction work site

6.3.3 COTR Requirement

Shall verify and enforce that chemicals are stored properly by onsite contractors and that the MSDS are kept at the construction site

6.4 Occupational Safety and Health Administration (OSHA) Competent Person Verification (*29 CFR 1926*)

The contractor shall designate on company letterhead a competent person(s) for each planned operation in compliance with Occupational Safety and Health Administration (OSHA) standards and Environmental Protection Agency (EPA) regulations. Scaffolding shall not be erected, moved, dismantled, or altered except under the supervision of a trained, competent person.

6.5 Contractor Training Requirements (*29 CFR 1926*)

The contractor is responsible for meeting the following requirements for all employees:

- Developing, to the extent specified in the contract, motivation, awareness, training, and certification programs for employees in safety matters (includes regularly scheduled safety meetings for supervisors, foremen, and employees); documenting safety-related training in accordance with OSHA requirements and as specified in the contract
- Training in emergency procedures, including emergency plans, routes, assembly locations, and procedure to summon help utilizing the emergency notification telephone numbers and/or systems
- Training to recognize and avoid unsafe conditions and practices
- Training in hazard communications, blood-borne pathogens, chemical safety as required (see the GRC Environmental Program Manual)
- Training in the hazards that may be encountered and the procedures to follow when employees are required to enter a confined or enclosed space (see the GRC Safety Manual)
- Training in the proper use of fire extinguishers if required to use them
- Training in safety requirements for excavations and trenches and using proper shoring techniques
- Ensuring that only trained, certified personnel shall be allowed to operate cranes or other lifting equipment (see Cranes and Lifting Device chapter of the GRC Safety Manual).
- Training on site-specific safety orientation shall be given to all new employees (currently a PowerPoint presentation)
- Training on the requirements of the site-specific HASP and signing the HASP as documentation of this training

6.6 Inspection (*NPR 8715.3 and NPD 8820.2*)

The contractor shall provide the contracting officer, SHED, Headquarters review teams, Federal compliance safety and health officers, and EPA compliance officers with access to contractor activities and/or operations. The contractor shall provide access for conducting selected announced and unannounced reviews of contractor operations by SHED and the COTR. The contractor is to provide on a weekly basis a list of active construction projects to SHED and the COTR.

6.6.1 Contractor Inspections

Except for maintenance projects lasting one day or less, the contractor shall conduct and document daily safety inspections of the job site. The documentation shall be maintained at the job site. The purpose of this inspection is to ensure that the site is in a safe condition.

6.6.2 SHED Inspections

SHED shall conduct frequent inspections of construction sites to verify site safety and compliance with applicable regulations. Inspections shall be documented and disseminated within 24 hours after the inspection.

6.6.3 COTR and/or Quality Assurance Technician Inspections

The COTR and/or quality assurance technician shall conduct and document frequent inspections of construction sites to verify site safety and compliance with applicable regulations.

6.7 Emergency Response Procedures

6.7.1 Glenn Research Center

In the event of fires, explosions, chemical spills, illness, injuries, or other emergencies, dial 9-1-1 from any internal GRC telephone. A GRC dispatcher will answer your call and dispatch the appropriate personnel and/or equipment. If you do not have access to a GRC telephone, you may call 216–433–8888 from pay phones, cell phones, etc.

If an emergency occurs, be prepared to relay the following information to the GRC dispatcher:

- Location of the emergency
- Nature of the emergency (fire, medical, chemical, etc.)

- Number of persons injured

Remain on the line with the dispatcher until he or she releases you. For nonemergency response, dial 216–433–2088.

6.7.2 Plum Brook Station

In the event of fires, explosions, chemical spills, illness, injuries, or other emergencies, dial 9-1-1 from any internal PBS telephone. A PBS dispatcher will answer your call and dispatch the appropriate personnel and/or equipment. If you do not have access to a PBS telephone, you may call 419–621–3222 from pay phones, cell phones, etc.

If an emergency occurs, be prepared to relay the following information to the PBS dispatcher:

- Location of the emergency
- Nature of the emergency (fire, medical, chemical, etc.)
- Number of persons injured

Remain on the line with the dispatcher until he or she releases you.

6.8 Mishap Investigation (*NPR 8621.1*)

The contractor shall report all accidents, including near misses, to the COTR using NASA Incident Reporting and Information System (IRIS) and shall initiate an investigation within 24 hours. For more information, refer to Glenn Safety Manual, Chapter **21**, Mishap and Close Call Reporting, Investigating, and Recordkeeping.

Report, to the extent specified in the contract, safety data on mishaps, close calls, and lessons learned as required in NPR 8621.1, NASA Procedures and Guidelines for Mishap Reporting, Investigating, and Recordkeeping, and in accordance with Glenn and OSHA requirements. Investigation of contractor mishaps will be conducted in accordance with procedures as specified in the contractor's safety plan. The contracting officer or the COTR will evaluate and verify implementation of corrective actions.

6.9 Signs, Signals and Barricades (*29 CFR 1926*)

The contractor shall ensure that all construction signs contain the company name, subcontractor name, and contractor emergency contact and that the sign be visibly displayed while construction is underway. The contractor shall remove the sign promptly when the project is completed (orange construction signs shall contain the company name, subcontractor name, and the NASA COTR with phone number).

The contractor shall ensure that all construction sites be barricaded as required In Glenn Safety Manual, Chapter **29**, Safety Barricades.

6.10 Waste Management

The contractor shall adhere to the requirements in the following chapters of the Environmental Management Manual.

- Management of Hazardous Materials and Waste for Reuse, Recycling, or Disposal
- Handling and Disposal of Soil

6.11 Project Acceptance (*NASA–STD–8719.9 and NPR 8715.3*)

The COTR and SHED shall schedule a final walk-through of the construction project.

7.0 RECORDS

The following records are generated:

- SHED inspection documentation

8.0 REFERENCES

Document number	Document name

29 CFR 1926	Occupational Safety and Health Regulations for Construction
NPD 8820.2	NASA Policy Directive: Design and Construction of Facilities
NPR 8621.1	NASA Procedural Requirement: NASA Procedural Requirements for Mishap and Close Call Reporting, Investigating, and Recordkeeping
NPR 8715.3	NASA Procedural Requirement: NASA General Safety Program Requirements
NPR 8820.2	NASA Procedural Requirement: Facility Project Requirements
NASA–STD–8719.7	NASA Technical Standard: Facility System Safety Guidebook
NASA–STD–8719.11	NASA Technical Standard: Safety Standard for Fire Protection

APPENDIX A.—DEFINITIONS AND ACRONYMS

Authority having jurisdiction (AHJ).—Individual(s) at GRC responsible for implementing the fire safety provisions of NPR 8715.3 and having the authority to approve and/or concur with associated installations, procedures, and equipment. The AHJ is appointed by the Center director.

Construction.—Any activity that results in new buildings, structures, and facilities, or modifications to existing buildings, structures, and facilities, such as alterations and repairs; routine institutional maintenance; work on utility systems, process piping, facility equipment, and research hardware; painting or decorating

Construction of facilities (CoF)

Contracting officer.—Authorized representative for administering contracts

Contracting officer's technical representative (COTR).—Individual designated by the contracting officer to act as his or her authorized representative in administering a contract

Environmental Protection Agency (EPA)

Experience modification rate (EMR)

Hazardous Waste Operations and Emergency Response (HazWOpER)

Health and safety plan (HASP)

Hot work.—Any operation requiring the use of a flame-producing device, an electrically heated tool, or a mechanical tool that can produce sparks or heat to provide an initiation stimulus (see Chapter **28** the of the Glenn Safety Manual, Hot Work Authorization)

Incident Reporting and Information System (IRIS)

Material safety data sheets (MSDS)

NASA Policy Directive (NPD)

NASA Procedural Requirement (NPR)

Occupational Safety and Health Administration (OSHA)

Site-Specific HASP.—A plan developed to identify and ameliorate safety and health hazards at a specific site, such as a construction site; the plan describes hazards that are likely to be encountered and develops procedures to either eliminate or control the hazards (see attached sample template, Appendix **C**).

Work stoppage authority.—Authority to immediately stop all work being performed at a job site; usually invoked when a situation of imminent danger exists that could result in serious injury to workers and/or personnel

APPENDIX B.—CoF DESIGN REVIEW PROCESS

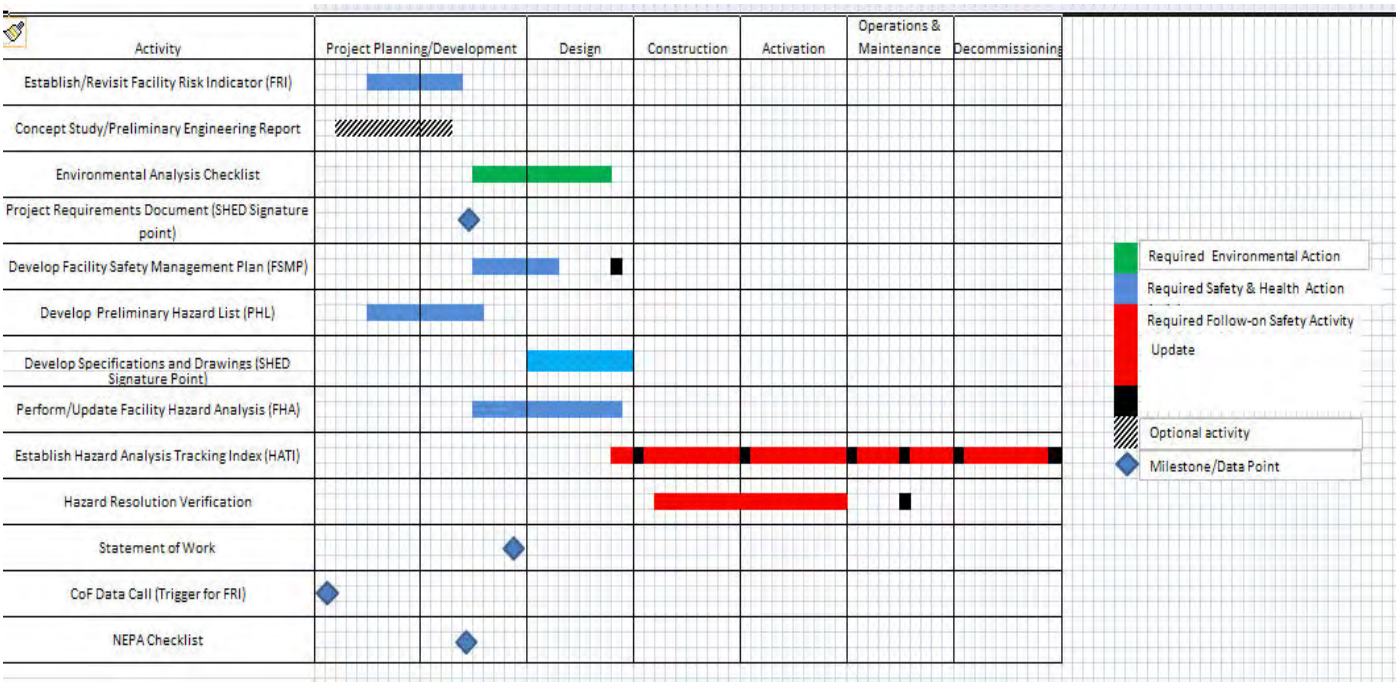

APPENDIX C.—HASP SUBMITTAL PROCESS

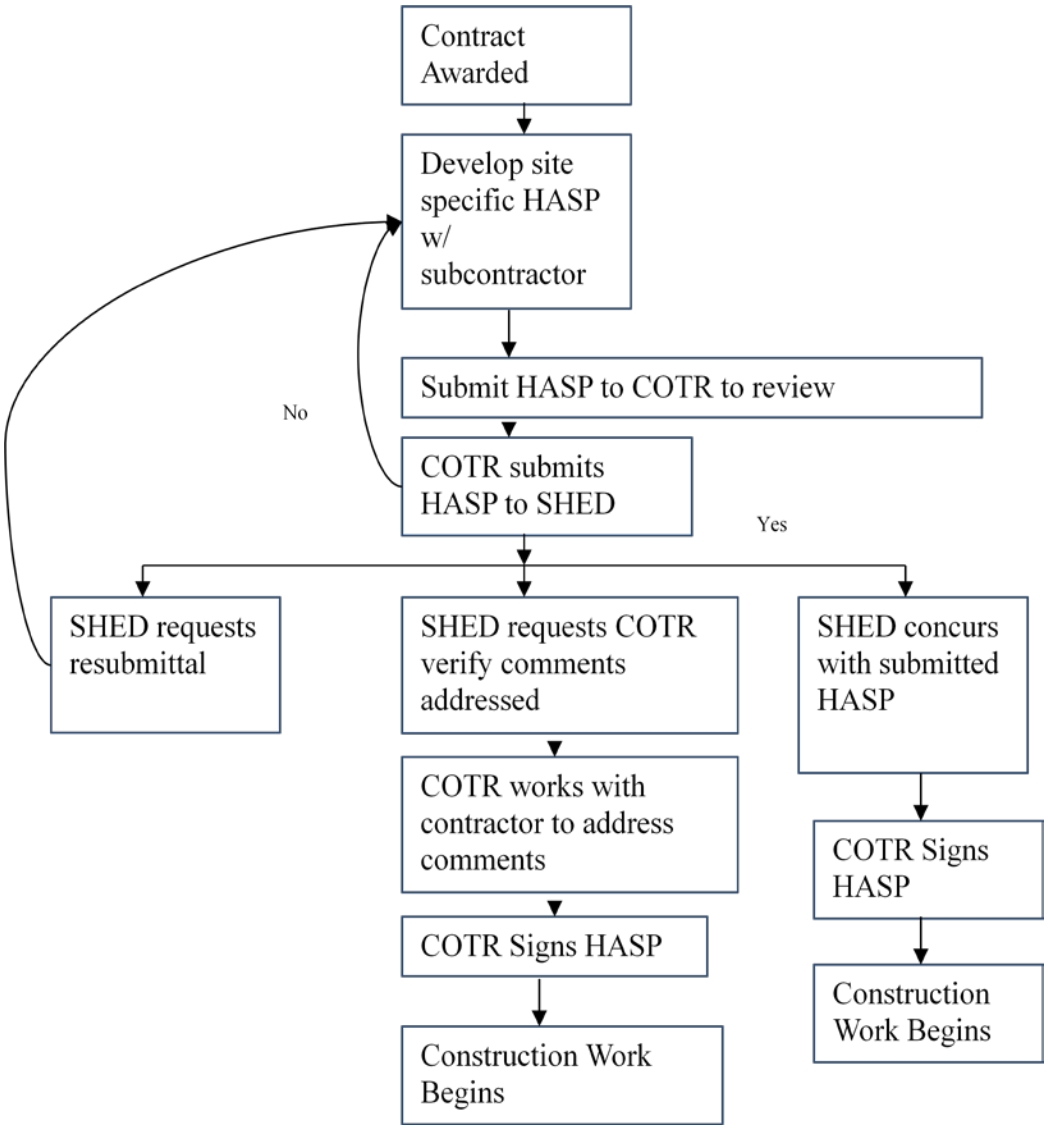

APPENDIX D.—SHORT-DURATION HASP TEMPLATE

Job Hazard Analysis

1. Project Title:	2. Location:	3. Date:
4. Task Description:		
5. Prime Contractor:	6. Competent Person and phone number:	
7. Sub Contractors:		
7a. NASA POC:		
8. Emergency information: Dial 911 internal or Lewis Field dial 216-433-8888 PBS dial 419-621-3222		

9. Work Activity	10 Hazard	11. Controls	12. PPE Required	13. Other Information

14. Prime Contractor Signature:	15. Title:	16. Date:

Daily Site Safety Coordination Review Instructions

The Daily Site Safety Coordination Review shall identify the project title, location, Prime contractor, Competent person(s), sub contractors and the signature of the Prime Contractor who acknowledges that employees have read and understood the contents, have received the proper training and are qualified to perform the work project or activity.

Blocks 1 – 8: Self explanatory

Block 9: Identify all tasks and procedures associated with this project on the date listed that have a potential to cause injury or illness to personnel or adjacent NASA personnel and damage to property or materials. Include emergency evacuation procedures.

Block 10: Identify all known or suspect hazards associated with each respective task or procedure listed in block 8.

Block 11: Identify appropriate actions to reduce or eliminate the hazards identified in block 10. Control measures listed below are in order of preference

1. Engineering controls (the most desirable method of control)
2. Substitution. For example, switching to a less hazardous chemical.
3. Administrative controls. For example, limiting exposure by reducing work schedule.
4. PPE (least desirable method of control)

Block 12: Identify any PPE that is required for each respective hazard identified in Block 10.

Block 13: Identify any coordination issues that may present additional hazards.

Block 14: The Daily Site Safety Coordination Review must be reviewed and approved by the Prime Contractor.

Block 15, 16: Self explanatory

Emergency Evacuation Procedures

Site superintendents and crew members are responsible for developing and discussing emergency evacuation procedures and alternatives in the event of an emergency at the work site. If someone becomes ill or injured at the worksite be prepared to provide the following information to the emergency dispatcher.

1. Nature of the accident, injury or illness
2. Location of the accident, injury or illness including building number and area
3. Contact person
4. Additional hazards specific to the work site.
5. Stay on the phone until the NASA Emergency Dispatcher releases the caller.

The items listed above serve only as guidelines for the development of emergency evacuation procedures.

*****Number of Workers:
*****Evacuation Meeting Location:

Daily Site Safety Coordination Review and Emergency Evacuation Procedures Acknowledgement

We, the undersigned site superintendent and crew members, acknowledge participation in the development of this Daily Site Coordination Review and accompanying emergency evacuation procedures. We have thoroughly discussed and understand the provisions of each of these documents:

Signature	Date	Signature	Date

APPENDIX E.—MINIMUM CONTENT FOR A SITE-SPECIFIC HEALTH AND SAFETY PLAN

The following are requirements for a safety and health policy and program document. The following are the minimum requirements for the site-specific HASP; however, each plan shall be job specific and shall also address any unusual or unique aspects of the project or activity for which it is written. The HASP shall reflect the employer's corporate safety and health program.

1. Signature sheet: title, signature, and phone number of the following:
    a. Plan preparer
    b. NASA representative: reviews HASP to verify that scope of work is complete
    c. NASA safety and health designee: reviews document for compliance with OSHA; reviews for impacts on adjacent NASA occupants
2. Contractor information
    a. Prime contractor
    b. Contract or task number
    c. Project name
    d. Accurate project description and location
    e. Contractor accident experience (provides information such as experience modification rate (EMR), OSHA 300 forms, corporate safety trend analysis)
3. Statement of safety and health policy; provides a copy of the current corporate/company safety and health policy statement.
4. Responsibilities and lines of authorities
    a. Identification and accountability of personnel responsible for safety at corporate and project level
    b. Lines of authority
5. Competent person: contractor is to designate, on company letterhead, a competent person(s) for each planned operation in compliance with OSHA standards and Environmental Protection Agency (EPA) regulations.
6. Subcontractor information
    a. Identification of subcontractors
    b. Means for controlling and coordinating subcontractors
    c. Safety responsibilities of subcontractors.
7. Training
    a. List of mandatory training and certificates that are applicable to this project (e.g., confined space, crane operator, respiratory protection, Hazardous Waste Operations and Emergency Response (HazWOpER), etc.) and list of any requirements for periodic retraining/ recertification
    b. List of requirements for supervisory and employee safety meetings (attendees, when held, who will conduct, etc.)
8. Safety and health inspections
    a. Person who will conduct safety inspections (e.g., project manager, safety professional, supervisors); inspector's training/qualifications, frequency of inspections, process to record inspections, deficiency tracking system, followup procedures, etc.
    b. Any external inspection/certifications that may be required

9. Safety and health expectations, incentive programs and compliance
    a. Brief description of the company's safety incentive program
    b. Policies and procedures regarding noncompliance with safety requirements
10. Accident reporting: contractor shall identify who, how, and when the following will be completed
    a. Exposure data
    b. Accident investigations, reports, and logs
    c. Immediate notification of major accidents
11. Plans, programs, and procedures
    a. Emergency response plans (procedures and posting of emergency phone numbers)
    b. Spill plans
    c. Hazard communication program, including location of MSDS, records of employee training, and inventory of hazardous materials (approx. quantities and a site map) that will be brought onto Government property by contractor and subcontractors
12. Hazard analysis and controls (including job hazard analysis documenting the following (see HASP outline in the construction eRoom for more details)).
    a. Steps to accomplish the project
    b. Hazards associated with each step
    c. Controls associated with each step
    d. Personal protective equipment required for each step

Contents

1.0 PURPOSE 3
2.0 APPLICABILITY 3
3.0 BACKGROUND 3
4.0 POLICY 3
5.0 RESPONSIBILITIES 3
5.1 User's 3
5.2 Supervisor 4
5.3 Area Safety Committee Chair 4
5.4 Explosives Safety Officer (ESO) 4
6.0 REQUIREMENTS 4
6.1 Facility Site and Construction Plans (NASA-STD-8719.12, Section 4.25) 4
6.1.1 Exemptions 4
6.1.2 Applicability 5
6.2 Operational Explosives Limits (NASA-STD-8719.12, Section 4A) 5
6.3 Personnel Limits (NASA-STD-8719.12, Section 4B) 5
6.4 Limit Control (NASA-STD-8719.12, Section 4.C) 5
6.5 Training (NASA-STD-8719.12, Section 4F) 6
6.6 Operating Procedures (NASA-STD-8719.12, Section 4G) 6
6.7 New Explosives Facility Design and Construction (NASA-STD-8719.12, Section 4H) 6
6.7.1 Hazardous Locations (NASA-STD-8719.12, Section 4B) 6
6.7.2 Equipment for Hazardous Locations (Article 500 of NEC) 7
6.8 Storage, Handling, and Disposal of Explosives (NASA-STD-8719.12, Section 4I) 7
6.8.1 Handling of Explosives (NASA-STD-8719.12, Section 4I) 8
6.8.2 Disposal of Explosives (NASA-STD-8719.12, Section 4I) 8
6.9 Fire Protection (NASA-STD-8719.12, Section 5A) 8
6.10 Electrical Equipment, Electromagnetic Radiation, Lightning Protection, and Static Electricity (NASA-STD-8719.12, Section 5B) 9
6.11 Laboratory Safety (NASA-STD-8719.12, Section 5C) 9
6.12 Concurrent Hazardous Operations (NASA-STD-8719.12, Section 5D) 10
6.13 Housekeeping (NASA-STD-8719.12, Section 5E) 10
6.14 Personal Protective Equipment (NASA-STD-8719.12, Section 5F) 10
6.15 Prohibited Articles in Hazardous Areas (NASA-STD-8719.12, Section 5E) 10
6.16 Tooling and Equipment (NASA-STD-8719.12, Section 5F) 10
6.17 Parking (NASA-STD-8719.12, Section 5.9.1) 10
6.18 Rocket Catapults and Explosive Release Cartridges for Aircraft Ejection Seats (NASA-STD-8719.12, Section 4.25.9.1.12.5.2) 11
6.19 Explosives, Propellants, and Pyrotechnics Hazard Classification (NASA-STD-8719.12, Section 5H) 11
6.19.1 Explosives and Pyrotechnics Hazard Classification 11
6.19.2 Liquid Propellants Hazard Classification (NASA-STD-8719.12, Section 5H) 11
6.19.3 Hazard Division 1.1 through 1.6, Storage Compatibility Groups (SCGs) 12
6.19.4 Mixed Storage (NASA-STD-8719.12, Section 5H) 14
6.20 Quantity Distance Requirements (NASA-STD-8719.12, Section 5I) 14
6.21 Transportation, Materials Handling Equipment, And Shipment of Explosives, Propellants, and Pyrotechnics (NASA-STD-8719.12, Section 5J) 14
6.21.1 Transportation 14
6.21.2 Material-Handling Equipment 14
6.21.3 Shipment of Explosives 14
6.22 Explosion Hazards and Exposure Risk Management (NASA-STD-8719.12, Section 5K) 15
7.0 RECORDS 15
7.1 Explosives Inventory (NASA-STD-8719.12, Section 4D) 15
7.2 Training Records (NASA-STD-8719.12, Section 4F) 15
8.0 REFERENCES 15
8.1 Department of Defense References 15

8.2 Department of Energy References 16
8.3 Occupational Safety and Health Administration References 16
8.4 Department of Transportation References 16
8.5 Environmental Protection Agency References 16
8.6 National Aeronautics and Space Administration References 16
8.7 National Fire Protection Association References 16
APPENDIX A .—DEFINITIONS AND ACRONYMS 17

Chapter 18—Explosives, Propellants, and Pyrotechnics

NOTE: *The current version of this chapter is maintained and approved by the Safety and Health Division (SHeD). The last revision date of this chapter was August 2012. The current version is located on the Glenn Research Center intranet at http://smad-ext.grc.nasa.gov/shed/pub/gsm/gsm-manual.pdf. Approved by Chief of Safety and Health Division.*

1.0 PURPOSE

This document provides a uniform set of standards for all NASA Glenn Research Center (GRC) installations involved in explosives handling or processing, and it complies with the cardinal principle for explosive safety: expose the minimum number of people to the smallest quantity of explosives for the shortest period consistent with the operation being conducted.

2.0 APPLICABILITY

This chapter is applicable to all GRC facilities at Lewis Field and Plum Brook Station (PBS) engaged in the handling, storage, transportation (onsite or offsite), or testing of explosives or of assemblies containing explosives. It provides guidance on procedures for operations involving explosives, propellants, and pyrotechnics and the safe management of such operations. It also provides guidance for the storage or handling of energetic liquids used for static test-stand operations. This chapter does not govern the bulk storage of hazardous gases used for standard industrial purposes (e.g., medical or welding) or for non-propellant systems involving liquid oxygen and liquid hydrogen. For these materials and systems, follow appropriate Occupational Safety and Health Administration (OSHA), National Fire Protection Association (NFPA), ASTM International (ASTM MNL 36, Safe Use of Oxygen and Oxygen Systems), American National Standards Institute/American Institute of Aeronautics and Astronautics (ANSI/AIAA G–095–2004, Guide to Safety of Hydrogen and Hydrogen Systems), and NASA regulations.

3.0 BACKGROUND

The requirements of this chapter are derived from NASA Procedural Requirement (NPR) 8715.3C, NASA General Safety Program Requirements and NASA Standard (NASA-STD)-8719.12, Safety Standard for Explosives, Propellants, and Pyrotechnics.

4.0 POLICY

It is GRC policy to ensure that qualified personnel control explosives from acquisition through disposal. All research involving explosives, propellants, or pyrotechnics requires a Safety Permit. Only individuals who are certified in explosive operations in accordance with NASA's policies, who understand the potential hazards, and who have acquired the skills necessary to carry out their individual responsibilities safely will be involved in the use and handling of explosives. See Section **6.5** for training requirements.

5.0 RESPONSIBILITIES

5.1 User's

It is the user's responsibility to ensure that, prior to conducting any operation involving explosives, all of the following requirements are met:

The installation (Lewis Field or PBS) has adequate facilities to store, handle, or test devices or materials that are classified as 1.1, 1.3, 1.4, 1.5 or 1.6 explosives. (See Section **6.7.1** for definitions related to explosive classifications.)

The area safety committee chair is contacted first to discuss the nature and extent of the hazard to Center personnel, facilities, equipment, the community, and the environment before the user orders or takes delivery of any explosive material.

During the Safety Permit application process, the area safety committee is provided with all necessary documentation to verify compliance with NASA Headquarters requirements for handling explosives, including site and construction plans (required if more than laboratory-scale quantities are involved), any approved waivers to existing policies or procedures for handling explosives, hazard assessment form (NASA C–923A), applicable

drawings, schematic diagrams, and standard operating procedures (SOPs) for explosive handling and operational test procedures to ensure that explosives are received, stored, handled, tested, and disposed of in a safe manner.

GRC organizations having oversight are properly informed of the expected delivery date. This includes the Safety and Health Division (SHeD), the Logistics and Technical Information Division, and the Office of Protective Services.

The GRC chemical hygiene officer is contacted prior to procuring explosives, propellants, or pyrotechnics.

5.2 Supervisor

It is the responsibility of the supervisor to ensure that the following requirements are met:

Adequate facilities exist to safely store, handle, or test explosives or explosive devices.

Employees handling explosives are knowledgeable, receive adequate training on explosives, and are certified to handle explosives through training provided by the NASA Safety Training Center.

Adequate personal protective equipment (PPE) is available, if required. A job hazard analysis is performed before PPE is selected

All personnel handling explosives are trained on specific SOPs and test procedures unique to the explosives being handled.

An explosives inventory is maintained and available in the area where explosives are stored.

5.3 Area Safety Committee Chair

The area safety committee chair associated with the geographical location of the explosive activity shall be notified in advance of the planned use of explosives in that area. For all new permits, the chair may request that a preliminary meeting be held with the safety committee to discuss an overview of the planned project and overall hazards anticipated. The safety committee may then identify safety problems related to site planning or storage requirements resulting from the initial meeting and require that these problems be resolved in the Safety Permit hazard analysis and related documentation at the time of submittal. Prior to operation, a full safety committee review is required to ensure that all hazards are adequately addressed. For requirements related to Safety Permits, refer to Chapter **1A** of the Glenn Safety Manual.

5.4 Explosives Safety Officer (ESO)

The ESO shall have overall responsibility for ensuring that storage, handling, and testing of explosives—or devices containing explosives—comply with Federal, State, local, and NASA requirements as described in this chapter, including participation in the review and approval of site and construction plans and in the design of explosive storage, handling, and testing facilities. NPR 8715. 3C, Chapter 3, paragraph 3.11.4, provides a full description of ESO responsibilities. The ESOs at Lewis Field and PBS shall be appointed by the Director of Safety and Mission Assurance. The ESOs shall have sufficient knowledge and NASA training, as determined by the Chief of SHED, to manage all aspects of the explosive safety program.

6.0 REQUIREMENTS

6.1 Facility Site and Construction Plans (NASA-STD-8719.12, Section 4.25)

6.1.1 Exemptions

Facilities in which experimental or laboratory operations are conducted, and where no more than 200 grams (g) of explosives are involved, are exempt from site and construction plan preparation; however, adequate distance must be provided between the laboratory and other buildings containing explosives (with the distance based on the quantity of explosives in those buildings). Such operations include, but are not limited to, small-scale formulations work; chemical, physical, and thermal analysis; and sensitivity tests.

Experimental and laboratory facilities are exempt from Quantity-Distance (QD) criteria where operations involving 10 g or less of explosives are conducted under authority-having-jurisdiction-approved SOPs. All explosives, propellants, and pyrotechnics—regardless of quantity—must be handled according to GRC's chemical hygiene policy, as specified in Chapter **25** of the Occupational Health Programs Manual.

6.1.2 Applicability

When explosive quantities exceed the exempted amount for laboratory-scale operations(200 grams per location), facility explosive site plans, general construction plans for facilities or structures containing explosives, pyrotechnics, and propellants shall be prepared and reviewed by the ESO, The AHJ for Fire Safety and the Area Safety Committee for compliance with Section 4.25 of NASA Standard 8719.12,. General details of the plans must include any non-related facilities, which may be exposed to the hazards of a potential explosion site. A facility site and construction plan shall show protection provided against explosion propagation between adjacent bays or buildings as well as protection of personnel against death or serious injury from incidents in adjacent bays or buildings.

If the protection of personnel and facilities would be greatly enhanced by having separate buildings sited to limit explosion propagation rather than by using protective construction and separation of explosive units within one building, then facility site planning should reflect this fact.

Sufficient protective construction should be provided to harden a PES to suppress explosion effects. Proper location of the exposed site in relation to the PESs protects against unacceptable damage and injuries in the event of an accident. These factors may reduce the required QD when rationale or test results justify the reduction. This rationale must accompany the site plan to be presented to the authority having jurisdiction and SHeD and, when required, the NASA Headquarters Safety Office.

The ESO and AHJ approval must be obtained prior to initiating concept design for explosive facilities.

6.1 The SHeD verification procedure, to ensure compliance with the requirements listed in this section are adhered to, will be through a combination of review processes (Annual Evaluation, Safety Permits, design reviews, etc.) and/or worksite/building inspections. Documentation of Annual Inspections/Evaluations will be maintained by the ESO with copies furnished to the Chemical Hygiene Officer and SHeD management.

6.2 Operational Explosives Limits (NASA-STD-8719.12, Section 4A)

The quantity of explosives at an operating location shall be the minimum necessary to carry out an operation in a safe and efficient manner. When practical, this quantity shall be subdivided and adequately separated to prevent propagation of detonation or deflagration. Supplies exceeding this minimum quantity shall be removed from the operating area. Maximum permitted quantity of explosives shall be displayed on all storage lockers or aboveground storage magazines. When necessary, Facilities may license a limited quantity, not to exceed 200 grams in each licensed location, of 1.1 Class/Division materials for research/testing in laboratories. A comparable quantity for the Class 1 Divisions (1.2, 1.3, 1.4, 1.5, and 1.6) is determined by the TNT equivalency. A fragmentation barrier consisting of a 0.25 inch thick mild steel plate shall be used for storage (Requirement). Explosives used solely for a research/testing project shall be licensed only for the length of the project (Requirement).

6.2 The SHeD verification procedure, to ensure compliance with the requirements listed in this section are adhered to, will be through a combination of review processes (Annual Evaluation, Safety Permits, design reviews, etc.) and/or worksite/building inspections.

6.3 Personnel Limits (NASA-STD-8719.12, Section 4B)

The number of personnel at an explosive operating location shall be the minimum consistent with safe and efficient operation. The area safety committee shall determine the minimum number of individuals permitted to perform explosives-related operations safely.

6.4 Limit Control (NASA-STD-8719.12, Section 4.C)

A barricading system shall be established during test operations to control entry of unauthorized personnel within explosives operating areas. The barricading distance shall be based on the QD, but it shall be set at intraline distance as a minimum.

6.5 Training (NASA-STD-8719.12, Section 4F)

The SHeD Training Committee, in cooperation with the ESO, shall establish a training and certification program for explosive handlers and awareness training for their immediate supervisors that shall be coordinated with operations personnel at Lewis Field and PBS. Training requirements are program specific. The explosive handler shall receive refresher training whenever the scope of his or her work changes, whenever the level of hazard changes, or every 3 years as a minimum.

6.5 The SHeD verification procedure, to ensure compliance with the requirements listed in this section are adhered to, will be through a combination of review processes Annual Evaluations by the ESO.

6.6 Operating Procedures (NASA-STD-8719.12, Section 4G)

Operational procedures and check sheets shall be utilized when tests involving explosives are being performed. The operational procedure shall specify the step-by-step procedures for safe storage and handling, including any PPE required. The content of the operating procedures shall follow the written guidance contained in Chapter 4, paragraph 402, of the NASA-STD-8719.12.

6.7 New Explosives Facility Design and Construction (NASA-STD-8719.12, Section 4H)

New explosives facility building roofs and walls shall be designed to protect personnel and equipment by using fire walls, operational shields, substantial dividing walls, blast resistant roofs, containment structures, and earth-covered magazines in accordance with NASA-STD-8719.12. However, if an ordinary building is utilized and not specifically designed for explosives use, it shall be designed so that it is as light as practicable (weak) and so constructed and supported that it will vent an internal explosion with the formation of a minimum number of large fragments.

- **Fire Walls and Openings**.—Fire walls and openings in fire walls shall comply with requirements of local fire codes and associated NFPA standards.
- **Substantial Dividing Walls**.—Substantial dividing walls shall be designed in accordance with TM5–1300 or equivalent approved methods to prevent propagation of detonation by blast, fragmentation, or wall fragments. Openings in substantial dividing walls for any purpose are not recommended. When such openings are deemed necessary (e.g., to permit remote operation), the size shall not be larger than the minimum to permit safe passage of the item being transferred. When the opening is not in use, the opening shall be provided with closures designed to the level of protection afforded by the wall.
- **Operational Shields**.—Operational shields shall be designed for use in designated hazardous operations to provide protection to personnel, material, or equipment from the effects of a possible fire or explosion. The design of operational shields shall be in accordance with military standard (MIL–STD) 398 or TM5–1300. Operational shields to protect laboratory workers shall be in accordance with Table 5–5 of NASA-STD-8719.12.
- **Emergency Exits and Fire Escapes**.—As a minimum standard for GRC explosives-operating buildings and facilities, emergency exits and fire escapes shall follow the latest editions of NFPA 101 and the Ohio Basic Building Code.

6.7 The SHeD verification procedure, to ensure compliance with the requirements listed in this section are adhered to, will be through a combination of review processes (Annual Evaluation, Safety Permits, design reviews, etc.) and/or worksite/building inspections.

6.7.1 Hazardous Locations (NASA-STD-8719.12, Section 4B)

Definitions of Class I, Class II, and Class III hazardous locations per NFPA 70, National Electrical Code (NEC), are defined as follows for NASA explosives facilities:

Class I.—Locations in which flammable gases or vapors are or may be present in the air in quantities sufficient to produce explosive or ignitable mixtures

Class I, Division 1.—Locations where the hazardous atmosphere is expected to be present during normal operations

Class I, Division 2.—Locations in which volatile flammable liquids or gases are handled, processed, or used, but in which they will normally be confined within closed containers or closed systems from which they can escape only in the case of accidental rupture or breakdown of the container or system (The hazardous condition will only occur under abnormal conditions.)

Class II.—Locations that are hazardous because of the presence of combustible dust

Class II, Division 1.—Locations where combustible dust may be in suspension in the air under normal conditions in sufficient quantities to produce explosive or ignitable mixtures

Class II, Division 2.—Locations in which combustible dust will not normally be in suspension in the air, and normal operations will not put dust in suspension, but where accumulation of dust may interfere with the safe dissipation of heat from electrical equipment and may be ignited by arcs, sparks, or burning material from the equipment

Class III.—Locations that are hazardous because of the presence of easily ignitable fibers or flyings, but in which the fibers or flyings are not likely to be in suspension in the air in quantities sufficient to produce ignitable mixtures

Class III, Division 1.—Locations in which easily ignitable fibers or materials producing combustible flyings are handled, manufactured, or used

Class III, Division 2.—Locations where easily ignitable fibers are stored or handled

Where flammable or combustible gases are present, locations are classified as Class I locations if either a Division 1 or 2 situation can exist. Recognize that a Division 2 hazardous location normally exists in the vicinity of a Division 1 hazardous location.

Where explosives, propellants, or pyrotechnic dusts will be present, locations are classified as Class II locations if a Division 1 or 2 condition can exist.

6.7.2 Equipment for Hazardous Locations (Article 500 of NEC)

- Electrical equipment and its installation shall comply, as a minimum, with the requirements of the most recent edition of the NEC and OSHA, whichever is more restrictive (Requirement). The NEC, published by the NFPA as NFPA 70, does not address explosives specifically; however, Article 500 of the NEC, in its section on Hazardous (Classified) Locations, does establish standards for the design and installation of electrical equipment and wiring in atmospheres containing combustible dusts and flammable vapors and gases. NEC standards and this chapter are minimum requirements for NASA explosive facilities. The presence of hazardous energetic material may or may not result in the presence or creation of a hazardous atmosphere (combustible dust, flammable vapor or gas) with respect to electrical equipment or wiring, as defined in NEC (NFPA 70) Article 500.

6.7.2 The SHeD verification procedure, to ensure compliance with the requirements listed in this section are adhered to, will be through a combination of review processes (Annual Evaluation, Safety Permits, design reviews, etc.) and/or worksite/building inspections.

6.8 Storage, Handling, and Disposal of Explosives (NASA-STD-8719.12, Section 4I)

Hazardous energetic materials, including explosive and pyrotechnic materials, shall not be stored within an operating building except for the minimum quantities necessary to maintain individual operations. Supplies above this limit shall be kept in aboveground storage magazines located at an intraline distance based on the net explosive weight of the explosives in the service storage magazine.

- A master list of all sites storing explosives and their locations, fire symbols, chemical storage sites, and available empty storage sites will be kept current and maintained by SHED. This list shall be available to emergency forces (e.g., local fire department and office of protective services) at all times.
- Explosives must be stored separately from other materials in laboratories. All explosives, exceeding exempted quantities, as well as other hazardous materials, must be stored outside laboratory buildings in separate facilities that meet construction and QD requirements.

- Where refrigeration is required for any flammable or explosive chemical, an explosion-proof mechanical refrigerator shall be used. Ventilation, as required, will be provided.
- Separate storage of flammable liquid fuels and oxidizers shall be in accordance with OSHA 1910, Subpart H—Hazardous Materials (Title 29 Code of Federal Regulations (CFR) 1910), as well as NFPA 50, 55, and 59A.
- Storage of small arms ammunition may be stored without regard to QD requirements provided that it is stored in a safe meeting Federal Specification AA-F-358H, Filing Cabinet, Legal and Letter Size, Uninsulated, Security, Class 5 or Class 6 and approved by the ESO.
- Storage rooms used for explosives shall be locked when unoccupied (Requirement)

6.8.1 Handling of Explosives (NASA-STD-8719.12, Section 4I)

Explosives, propellants, and pyrotechnics shall be handled in accordance with technical operation manuals or written SOPs by properly trained personnel. Procedures shall identify the physical and health hazards associated with explosive composition, liquid propellants, or electroexplosive devices; any unique storage and handling requirements; and any PPE required.

6.8.2 Disposal of Explosives (NASA-STD-8719.12, Section 4I)

A sufficient number of proper containers shall be provided for various waste materials to preclude mixing materials that may result in a chemical reaction, fire, or explosion.

Storage and disposal shall follow established GRC waste management procedures to ensure compliance with environmental regulations in accordance with Chapter **5** of the Environmental Programs Manual.

Explosive materials that are considered serviceable can be excessed or turned over to another government agency at the discretion of the ESO so long as they are not deemed unserviceable.

6.8 The SHeD verification procedure, to ensure compliance with the requirements listed in this section are adhered to, will be through a combination of review processes (Annual Evaluation, Safety Permits, design reviews, etc.) and/or worksite/building inspections.

6.9 Fire Protection (NASA-STD-8719.12, Section 5A)

The GRC fire protection engineer, on the basis of maximum fire loss criteria and program mission interruptions and delays (risk analysis), shall determine the type of fire suppression system for operations with explosives or liquid propellants.

- Fires involving explosives, propellants, and pyrotechnics will be fought according to their hazard division classification, the stage of the fire, and current procedures specified by the NASA organization concerned. Firefighting plans for explosives facilities will be prepared in advance and shall be developed by the user and approved by the GRC fire protection engineer.
- Field installations that rely on municipal or other fire-fighting organizations either on primary response or as a support unit will provide for hazard information or onsite meetings for fire fighters when requested to ensure the safety of the responding fire personnel.
- Vegetation around storage magazines and explosives-operating facilities should be controlled to minimize potential damage to the magazine or facility from grass, brush, or forest fires, or from erosion. A firebreak at least 15 meters wide and free from combustible material should be maintained around each aboveground magazine or facility processing or containing explosives. If the aboveground magazine or explosives facility exterior is fire resistant, the firebreak need not be devoid of vegetation, but growth must be controlled by mowing to prevent rapid transmission of fire to the magazine or facility. Maintenance of firebreaks around earth-covered magazines and cutting of grass covering these structures are not normally required, except around ventilators to prevent transmission of a fire into a structure.

6.9 The SHeD verification procedure, to ensure compliance with the requirements listed in this section are adhered to, will be through a combination of review processes (Annual Evaluation, Safety Permits, design reviews, etc.) and/or worksite/building inspections.

6.10 Electrical Equipment, Electromagnetic Radiation, Lightning Protection, and Static Electricity (NASA-STD-8719.12, Section 5B)

- **Electrical safety**.—Electrical equipment and its installation at NASA facilities shall comply, as a minimum, with the requirements of the most recent edition of the NEC and OSHA, whichever is more restrictive. NFPA 70E, Articles 500, 501, and 502 on hazardous (classified) locations, establishes standards for the design and installation of electrical equipment and wiring in atmospheres containing combustible dusts and flammable vapors and gases.
- **Electromagnetic radiation**.—Explosives or electroexplosive devices shall not be exposed to direct electromagnetic radiation without a prior review by the GRC radiation safety officer.
- **Lightning protection**.—It is NASA policy to comply with the requirements of both NFPA 70 (NEC) and 780 to provide minimum criteria for the design of lightning protection systems for facilities involved in the development, manufacturing, testing, handling, storage, maintenance, and disposal of explosives, pyrotechnics, and propellants.
- **Static electricity**.—Static electricity shall be controlled to eliminate or mitigate a fire and explosion hazard in accordance with NFPA 77.
- **Explosives in Process During Electrical Storms**: Upon notification of an approaching electrical storm (lightning flashes observed or forecasted to be within 5 nautical miles of operation, or less if determined by local operational requirements), personnel shall be evacuated from facilities where there is an explosives hazard that could be initiated by lightning. Personnel shall be evacuated to an area that will provide protection commensurate with the hazard level. Explosive operations requiring attention at all times shall continue to be performed by the minimum number of personnel consistent with safety requirements. Any process involving explosives shall not be started unless absolutely necessary or unless the process can be completed prior to an anticipated storm. There is no guarantee that lightning protection systems will provide the same degree of safety as a lightning-free environment. Reference NASA STANDARD 8719.12 Section 5.12

6.10 The SHeD verification procedure, to ensure compliance with the requirements listed in this section are adhered to, will be through a combination of review processes (Annual Evaluation, Safety Permits, design reviews, facility check sheets, testing equipment, etc.) and/or worksite/building inspections.

6.11 Laboratory Safety (NASA-STD-8719.12, Section 5C)

- The personnel limits and quantity of explosives used in any NASA laboratory must be established by the operating organization and approved by the responsible area safety committee. Where operations involve explosives, pyrotechnics, propellants, severe fire hazards, or toxic materials, personnel exposure must be limited to the minimum number of personnel, for the minimum time, consistent with safe and efficient operation.
- Laboratory operations involving explosives shall be governed by an approved Safety Permit and SOPs for safe handling and must be separated from those laboratory processes not involving explosives by approved operational shields or barriers.
- Particularly hazardous laboratory operations involving explosives must be performed by remote control with the operator protected by an approved operational shield or barrier.
- Where refrigeration is required for any flammable or explosive chemical, an ice chest of approved design or explosion-proof mechanical refrigerator shall be used. Ventilation, as required, will be provided.

- Liquid propellants or their constituents having flammable, corrosive, or toxic properties shall be stored and handled according to OSHA 1910.1450 and the GRC Chemical Hygiene Plan.

6.11 The SHeD verification procedure, to ensure compliance with the requirements listed in this section are adhered to, will be through a combination of review processes (Annual Evaluation, Safety Permits, design reviews, etc.) and/or worksite/building inspections.

6.12 Concurrent Hazardous Operations (NASA-STD-8719.12, Section 5D)

Unless a building or facility is specifically designed in accordance with TM5–1300 for concurrent operations, permissible concurrent operations should be conducted in separate buildings located at the appropriate intraline distance from other operating buildings. When it becomes necessary to conduct concurrent operations in the same building, the operational layout will be planned to segregate the primary hazards by substantial dividing walls, barricades, or other means to ensure maximum personnel protection.

6.13 Housekeeping (NASA-STD-8719.12, Section 5E)

Good housekeeping must be practiced at all times. Each laboratory or room must be kept neat, orderly, and free of hazardous amounts of explosives and chemical contamination. Corridors must be kept clean; floors, shelves, and work areas shall be kept free from all unnecessary apparatus and chemicals. Spills shall be cleaned up immediately, and broken glassware shall be placed in separate, specially marked receptacles.

6.14 Personal Protective Equipment (NASA-STD-8719.12, Section 5F)

Based on a worksite hazard assessment, personal protective equipment will be issued to employees in those situations where engineering controls, management controls, or other corrective actions have not reduced the hazard to an acceptable level or where use of engineering controls, management controls, or other techniques is not feasible.

6.14 The SHeD verification procedure, to ensure compliance with the requirements listed in this section are adhered to, will be through a combination of review processes (Annual Evaluation, Safety Permits, design reviews, etc.) and/or worksite/building inspections.

6.15 Prohibited Articles in Hazardous Areas (NASA-STD-8719.12, Section 5E)

Personnel shall not be permitted to carry cigarette lighters, matches, or any other flame-producing devices into hazardous materials restricted areas.

6.16 Tooling and Equipment (NASA-STD-8719.12, Section 5F)

Only non-sparking intrinsically safe tools will be used in locations where sparks may cause a fire or explosion, example, e.g, for work in locations that contain exposed explosives or hazardous concentrations of flammable dusts, gases, or vapors.

6.17 Parking (NASA-STD-8719.12, Section 5.9.1)

Parking of privately operated vehicles (POV) shall be controlled to minimize fire and explosive hazards and prevent congestion in the event of emergency. (Requirement) Automobiles shall be parked in designated areas outside of restricted areas. They should not be parked close enough to a building to either enable the spread of fire from an automobile to the building or hinder access by firefighters. Parking areas for privately owned vehicles shall be separated from a PES by 100 ft minimum distance if they serve only the workers assigned to a single PES and ILD from all other PESs (Requirement). If they serve multiple PESs, the minimum distance shall be ILD (Requirement). Private vehicle parking in administrative areas shall be a minimum of public traffic route distance from the nearest PES (Requirement). Minimum fragment distance shall be maintained in all situations except for POV parking areas serving a single PES (Requirement). The local ESO may reduce these parking requirements for licensed facilities.

6.17 The SHeD verification procedure, to ensure compliance with the requirements listed in this section are adhered to, will be through a combination of review processes (Annual Evaluation, Safety Permits, design reviews, etc.) and/or worksite/building inspections.

6.18 Rocket Catapults and Explosive Release Cartridges for Aircraft Ejection Seats (NASA-STD-8719.12, Section 4.25.9.1.12.5.2)

The GRC Chief of the Aircraft Operations Office shall be responsible for managing the storage, handling, and disposal of aircraft ejection seat explosive devices in accordance with this chapter or aircraft technical manuals for Class 1.4 explosive release devices and Class 1.3 rocket catapults.

6.19 Explosives, Propellants, and Pyrotechnics Hazard Classification (NASA-STD-8719.12, Section 5H)

The explosive hazard classification system consists of six hazard divisions for dangerous goods with ammunition and explosives included in United Nations Organization Class 1, Explosives. These ammunition and explosives hazard divisions are based on the character and predominance of the associated hazards and the potential for causing personnel casualties or property damage.

6.19.1 Explosives and Pyrotechnics Hazard Classification

- **Division 1.1**.—These explosives have a mass-detonation explosion hazard. Items in this division are primarily a blast hazard and may be expected to mass detonate when a small portion is initiated by any means. This division includes bulk explosives and some propellants.
- **Division 1.2**.—These explosives have a projection hazard, but not a mass explosion hazard. (Items in this division are not permitted at GRC.)
- **Division 1.3**.—These explosives have a fire hazard and either a minor blast hazard, minor projection hazard, or both, but do not have a mass-explosion hazard. Items in this division burn vigorously with little or no chance of extinguishment in storage configurations. Explosions normally are confined to pressure ruptures of containers and will not produce propagating shock waves or damaging blast overpressures beyond the magazine distances specified in Table 8–3 of NASA-STD-8719.12. A severe hazard of the spread of fire may result from tossing about the burning container materials, propellant, firebrands, or other debris. Toxic effects usually do not go beyond inhabited building distances. This division includes items such as solid propellant compositions.
- **Division 1.4**.—These explosives present a minor explosion hazard. The explosive effects are largely confined to the package and no projection of fragments is expected. An external fire must not cause instantaneous explosion of almost the entire contents of the package. Items in this division present a fire hazard with no blast hazard and virtually no fragmentation hazard beyond the fire hazard clearance ordinarily specified for high-risk materials. Separate facilities for storage and handling of this division should not be less than 100 ft from other facilities, except those of fire-resistive construction, which may be 50 ft from each other. This division includes items such as small arms ammunition without explosive projectiles, fuse lighters and squibs, colored smoke grenades, and explosive valves or switches.

6.19.2 Liquid Propellants Hazard Classification (NASA-STD-8719.12, Section 5H)

Hazard Classification of Energetic Liquids.

The main hazard classification designator for energetic liquids is Class 1 (explosives), Class 2 (compressed or liquefied gases), Class 3 (flammable liquids), Class 4 (flammable solids, self-reactive materials), Class 5 (oxidizers), Class 6 (toxic/infectious substances), Class 7 (radioactive), Class 8 (corrosive), or Class 9 (miscellaneous).

The standard storage and transportation compatibility designation is the (CG or SCG) designation. The alpha designations are the same as the CG designations for UN Hazard Class 1, with the same definitions. However, for storage and handling on NASA facilities, a CG may also be assigned to an energetic liquid in a Hazard Class other than Class 1. The absence of a CG indicates incompatibility with solid explosives.

Energetic Liquid Compatibility Group (ELCG) designation. The ELCG applies to mixed storage of energetic liquids or explosives components containing energetic liquids. The ELCG is specified in parentheses as the last element of the hazard classification. The ELCG designations and definitions are:

- LA - Energetic liquids that are strong oxidizers, mainly of acidic character. These materials may cause or contribute to the combustion of other material, possibly resulting in serious flare fires or explosions. Includes, but is not limited to, nitrogen tetroxide and mixed oxides of nitrogen (MON), inhibited red fuming nitric acid (IRFNA), liquid oxygen (LO2), hydrogen peroxide (H2O2), and gels, slurries, or emulsions of the above.

- LB - Energetic liquids that are readily combustible when exposed to, or ignited in the presence of an oxidizing agent, but that are not strong reducing agents. Some may be hypergolic with group LA materials. Includes, but is not limited to, hydrocarbons such as kerosenes and strained ring ramjet fuels; liquid hydrogen (LH2); and gels, slurries, or emulsions of the above.

- LC - Energetic liquids that are readily combustible when exposed to, or ignited in the presence of an oxidizing agent, and are also strong reducing agents. These will likely be hypergolic with group LA substances. Includes, but is not limited to, hydrazines and other amines; and gels, slurries, or emulsions of the above.

- LD - Energetic liquids that act mainly as combustible fuels, similar to groups LB and LC, when exposed to, or ignited in the presence of oxidizing agents but that may act as oxidizers in some combinations. They may be a monopropellant with the right catalyst, or may be pyrophoric and ignite upon release to the atmosphere. Examples are ethylene and propylene oxides, and boranes.

- LE - Energetic liquids having characteristics that do not permit storage with any other energetic liquid. They may react adversely with either fuels (reducing agents) or oxidizers. Examples are nitromethane, nitrate ester based formulations such as Otto Fuel II, liquid monopropellants containing hydroxyl ammonium nitrate (HAN), halogen fluorides (ClF3 and ClF5) and fluorine, and gels, slurries, or emulsions of the above.

Different energetic liquids in the same ELCG may be stored together with the exception of dissimilar liquids of Group LE. Mixed storage is prohibited between energetic liquids of different ELCG designations, with one exception: liquids of groups LB and LC should not be stored together if possible, especially for storage areas containing primarily materials of group LB; however, mixed storage is permitted if circumstances dictate. This compatibility scheme is reflected in the hazard classification for the hydroxyl ammonium nitrate based liquid propellant XM-46: 1.3C(LE) This hazard classification reflects CG “C” which indicates the propellant can be stored in the same magazine with CG “C” solid propellants, and since CG “C” can be mixed in storage with CG ”D” (see Table XI), CG “D” high explosive projectiles could also be present. On the other hand, hydrocarbon fuel such as JP-10 would not be permitted in this storage scenario, because its ELCG (LB) indicates incompatibility with the liquid gun propellant (LE).

- Hazard classification for NASA energetic liquids is shown in Table XXIX of NASA Standard 8719.12

- Liquid Propellant volume to weight conversion factors for typical propellants can be found in Table XXX of Section 5.51 of NASA Standard 8719.12.

- Liquid Propellant explosive equivalent weights for various fuels/oxidizer combinations can be found in Table XXXI of Section 5.51 of NASA Standard 8719.12.

- Flammable liquids, used as a propellant, that are stored separate from oxidizers shall be stored according to NFPA requirements.

6.19.3 Hazard Division 1.1 through 1.6, Storage Compatibility Groups (SCGs)

In accordance with explosives storage principles and considerations for mixed storage, explosives are assigned to one of the following 12 SCG’s.

- Group A. Initiating explosives - Bulk initiating explosives that have the necessary sensitivity to heat, friction, or percussion to make them suitable for use as initiating elements in an explosive train. Examples are wet lead azide, wet lead styphnate, wet mercury fulminate, wet tetracene, and dry pentaerythritol tetranitrate (PETN).

- Group B. Detonators and similar initiating devices - Items containing initiating explosives that are designed to initiate or continue the functioning of an explosive train. Examples are detonators, blasting caps, small arms primers, and safe/arm without two or more safing-features.

- Group C. Bulk propellants, propelling charges, and devices containing propellant with or without their own means of ignition - Items that upon initiation will deflagrate, explode or detonate. Examples are single, double, triple-base, and composite propellants, rocket motors (solid propellant).

- Group D. Black powder, a high explosive (HE), or a device containing an initiating explosive and two or more independent safety features - Explosives that can be expected to explode or detonate when any given item/component thereof is initiated.

- Group E. Ammunition containing high explosive (HE) without its own means of initiation and containing or with propelling charge (other than one containing a flammable or hypergolic liquid). Examples are artillery ammunition, rockets, or guided missiles.

- Group F. Devices (fused) with or without propelling charges. Examples are sounding devices and similar items having an in-line explosive train in the initiator.

- Group G. Fireworks, illuminating, incendiary, and smoke devices. (Not normally found in NASA installations).

- Group H. Ammunition containing both explosives and white phosphorous or other pyrophoric material. Ammunition in this group contains fillers which are spontaneously flammable when exposed to the atmosphere. (Not normally found in NASA installations).

- Group J. Ammunition containing both explosives and flammable liquids or gels. Ammunition in this group contains flammable liquids or gels other than those which are spontaneously flammable when exposed to water or the atmosphere. (Not normally found in NASA installations).

- Group K. Ammunition containing both explosives and toxic chemical agents. (Not normally found in NASA installations).

- Group L. Devices not included in other compatibility groups - Devices having characteristics that do not permit storage with other types of material. Examples are water-activated devices, prepackaged hypergolic liquid-fueled rocket engines, fuel-air explosive devices (FAE), (thickened Triethyl Aluminum (TEA)), and damaged or suspect items of any group. Types preventing similar hazards (i.e., oxidizers with oxidizers, fuels with fuels, etc.) may be stored together but not mixed with other groups.

- Group N. Hazard Division 1.6 devices containing only extremely insensitive detonating substance (EIDS). If dissimilar Group N explosives are mixed together and have not been tested to assure non-propagation, the mixed explosives are considered to be Hazard Division 1.2, Compatibility Group D, for purposes of transportation and storage.

- Group S. Items presenting no significant hazard — Devices so designed or packed that when in storage all hazardous explosive effects are confined and self-contained within the item or package. An incident may destroy all items in a single pack, but must not be communicated to other packs so all are destroyed. Examples are thermal batteries, explosive switches or valves, Safe and Arming (S&A) devices, and other items packaged to meet the criteria of this group.

6.19.4 Mixed Storage (NASA-STD-8719.12, Section 5H)

Mixing of storage compatibility groups is permitted as indicated in Figure 6–2 and Table 6–1 of NASA-STD-8719.12. Items from storage compatibility groups C, D, F, G, and S may be combined in storage if the net quantity of explosives in the items or in bulk does not exceed 1000 lb per storage site. These items must be packaged in accordance with approved drawings.

6.20 Quantity Distance Requirements (NASA-STD-8719.12, Section 5I)

The location of explosives facilities with respect to each other and to other exposures shall be based on the total quantity of explosives in each facility. When the total quantity is so subdivided that an incident involving any of the subdivisions will not produce simultaneous initiation of others, the net explosive weight of the mass-detonating explosives in the largest subdivision shall apply. Applicable QD tables for explosives and liquid propellants follow and are contained in NASA-STD-8719.12.

6.20 The SHeD verification procedure, to ensure compliance with the requirements listed in this section are adhered to, will be through a combination of review processes (Annual Evaluation, Safety Permits, design reviews, etc.) and/or worksite/building inspections.

6.21 Transportation, Materials Handling Equipment, And Shipment of Explosives, Propellants, and Pyrotechnics (NASA-STD-8719.12, Section 5J)

6.21.1 Transportation

The transportation of explosives by rail, air, vessel, and public highway shall comply with Department of Transportation regulations in 49 CFR Sections 173.52, 174.81, 175.78, 176.83, and 177.84. Transportation of explosives, propellants, or pyrotechnics onsite at Lewis Field or PBS must be with a dedicated Government vehicle. Personal vehicles may not used to transport explosives.

6.21.2 Material-Handling Equipment

Material-handling equipment used for moving explosives, propellants, or devices containing explosives shall meet requirements specified by OSHA or NFPA based on the area hazard classification.

6.21.3 Shipment of Explosives

- **Purchasing Explosives**
  All explosive purchases shall be approved by the GRC Chemical Hygiene Officer and the ESO within SHeD to ensure that adequate facilities exist for storage.

- **Packaging Regulations**
  The general regulations governing the marking, packing, and shipping of explosives are set forth in DOT 49 CFR and International Air Transport Association (IATA) regulations.

- **Electrostatic Packaging Materials**.
  In packaging explosives and explosive items for shipment, personnel will utilize all of the available technology and information to determine packaging materials, such as, antistatic packaging that will minimize triboelectric and frictional charging with proper conductivity to permit a safe, slow distribution of generated charge. Correct use of these guidelines will almost eliminate the possibility of electrostatic discharge (ESD) in explosive packaging material.

- **Receiving Explosives**.
  When explosives are received at GRC's Lewis Field and PBS, the requester or purchaser of explosives or propellants must specify on the purchase order (1) The proper shipping name and United Nations Organization number, (2) the explosive hazard division, and (3) storage compatibility. In addition, the requester's or purchaser's full name, phone number, and delivery location must be on the shipper's invoice so that the shipper can transport the explosives to the approved storage location upon arrival at GRC. The requestor, purchaser or designated individual must be present to receive the material and ensure that it is properly stored.

6.21 The SHeD verification procedure, to ensure compliance with the requirements listed in this section are adhered to, will be through a combination of review processes (Annual Evaluation, Safety Permits, design reviews, etc.) and/or worksite/building inspections.

6.22 Explosion Hazards and Exposure Risk Management (NASA-STD-8719.12, Section 5K)

In the assessment of the hazard associated with explosions, the principal effects of the explosive output to be considered are blast pressure, primary and secondary fragments, thermal hazards, and toxicity hazards. As an alternative to using the Quantity-Distance (QD) tables in the NASA Standard- 8719.12, reduced distances can be utilized if supported by testing/analyses of blast, fragment, and the thermal exposure criteria contained in DoD 6055.9. These reduced distances shall be approved by the Explosive Safety Officer. A general discussion concerning the effects of blast waves, fragmentation, and thermal hazards is contained in Section 5.63 of NASA Standard- 8719.12 and DoD Standard 6055.9. Any toxic material must be analyzed using dispersion analysis if there is risk to other GRC employees, the environment or the local community in the event of a release.

6.22 The SHeD verification procedure, to ensure compliance with the requirements listed in this section are adhered to, will be through a combination of review processes (Annual Evaluation, Safety Permits, design reviews, etc.) and/or worksite/building inspections.

7.0 RECORDS

7.1 Explosives Inventory (NASA-STD-8719.12, Section 4D)

Authorized handlers of explosives at Glenn Research Center at Lewis field and Plum Brook Station shall maintain a current inventory of explosives under their control. The inventory listing shall be located at the explosive storage magazine, laboratory or earth covered magazine where explosives are stored. The inventory shall be updated by the user when explosives are removed or added to the inventory and audited annually by the ESO. A copy of the inventory shall be forwarded to the Chemical Hygiene Officer when explosives are added or removed.

The ESO shall perform an annual survey for explosive materials located at GRC and PBS and provide a copy to the Chemical Hygiene Officer. Copies will be provided to SHeD management and hard copies will be maintained by the ESO. Due to security requirements the explosive inventory shall be considered a sensitive document.

7.2 Training Records (NASA-STD-8719.12, Section 4F)

Training records for explosive handlers shall be maintained by each individual's company or organization. Copies of explosive handler's training and certification shall be attached to the C-580, qualified operator's list of the associated safety permit for operations involving explosives or propellants. The onsite security contractor shall maintain training records for all security officers..

8.0 REFERENCES

8.1 Department of Defense References

Document number	Document name
DoD Directive **6055.9**	Department of Defense Explosives Safety Board.
DoD STD **6055.9**	Department of Defense: DoD Ammunition and Explosives Safety Standards. Undersecretary of Defense for Acquisition and Technology.
MIL–STD–**398**	Shields, Operational for Ammunition Operations, Criteria for Design of and Tests for Acceptance, November 5, 1976.
TM5–**1300**	(NAVFAC P–397, AFM 88–22) Structures to Resist the Effects of Accidental Explosions. November 1990.

8.2 Department of Energy References

Document number	Document name
DOE/EV/06194, Rev 4	Department of Energy (DOE), Explosive Safety Manual

8.3 Occupational Safety and Health Administration References

Document number	Document name
29 CFR **1910.103**	Occupational Safety and Health Standard, Hazardous Materials, Hydrogen.
29 CFR **1910.104**	Occupational Safety and Health Standard, Hazardous Materials, Oxygen.
29 CFR **1910.109**	Occupational Safety and Health Standard, Hazardous Materials, Explosives and Blasting Agents.
29 CFR **1910.110**	Occupational Safety and Health Standard, Hazardous Materials, Storage and Handling of Liquefied Petroleum Gases.

8.4 Department of Transportation References

Document number	Document name
49 CFR **171–179**	Department of Transportation Regulations Chapter I, Subchapter C, Hazardous Materials, Regulations.

8.5 Environmental Protection Agency References

Document number	Document name
40 CFR **261**	Protection of Environment, Solid Wastes, Identification and Listing of Hazardous Waste.

8.6 National Aeronautics and Space Administration References

Document number	Document name
NASA-STD-**8719.12**	Safety Standard for Explosives, Propellants, and Pyrotechnics.
NPR **8715.3**	NASA General Safety Program Requirements.
NASA–STD–**8719.11**	Safety Standard for Fire Protection.

8.7 National Fire Protection Association References

Document number	Document name
NFPA 30	Flammable and Combustible Liquids Code.
NFPA 45	Standard on Fire Protection for Laboratories Using Chemicals.
NFPA 50	Standard for Bulk Oxygen Systems at Consumer Sites.
NFPA 55	Standard for the Storage and Handling of Compressed and Liquefied Gases in Portable Cylinders.
NFPA 59A	Standard for Production, Storage and Handling of Liquefied Natural Gas (LNG).
NFPA 70	National Electrical Code.
NFPA 77	Recommended Practice on Static Electricity.
NFPA 780	Standard for the Installation of Lightning Protection Systems.

APPENDIX A.—DEFINITIONS AND ACRONYMS

Aboveground storage magazine.—Any building or structure, except for an operating building, used for the storage of explosives. Aboveground magazines are all types of above-grade (not earth covered) magazines or storage pads. This includes storage in trucks, trailers, railcars, or cargo aircraft.

American Institute of Aeronautics and Astronautics (AIAA)

American National Standards Institute (ANSI)

Antistatic.—Materials that exhibit a surface resistivity greater than 109 Ω/m^2, but less than 1014 $\Omega/\square^2$. This implies that the material does not exhibit triboelectric-charging propensities. This is unusual because of the topical treatment or volume impregnation of the material with a surfactant.

Authority having jurisdiction.—Individual appointed by the Chief of the Safety, Health and Environmental Division to be responsible for ensuring that explosive-related operations conducted at Glenn Research Center's Lewis Field and Plum Brook Station is conducted in accordance with all Federal, State, local and NASA requirements.

Barricade.—Intervening approved barrier, natural or artificial, of such type, size, and construction as to limit, in a prescribed manner, the effect of an explosion on nearby buildings or exposures.

Code of Federal Regulations (CFR)

Compatibility.—Chemical property that allows materials to coexist without adverse reaction for an acceptable period of time. Compatibility exists in storage when storing materials together does not increase the probability of an accident or, for a given quantity, the magnitude of the effects of such an accident. Storage compatibility groups are assigned to provide for segregated storage.

Concurrent operations.—Operations performed simultaneously and in close enough proximity that an incident with one operation could adversely influence the other.

Deflagration.—Rapid chemical reaction in which the output of heat is sufficient to enable the reaction to proceed and be accelerated without the input of heat from another source; a surface phenomenon with the reaction proceeding toward the un-reacted material along the surface at subsonic velocity. The effect of a true deflagration under confinement is an explosion. Confinement of the reaction increases pressure, rate of reaction, and temperature and it may cause transition into a detonation.

Department of Defense (DoD)

Detonation.—Violent chemical reaction within a chemical compound or mechanical mixture evolving heat and pressure that proceeds through the reacted material toward the un-reacted material at a supersonic velocity. The chemical reaction exerts an extremely high pressure on the surrounding medium, forming a propagating shock wave that starts at a supersonic velocity. When the material is located on or near the surface of the ground, a detonation is normally characterized by a crater.

Earth-covered magazine.—Aboveground, earth-covered structure intended for the storage of explosives, pyrotechnics, propellant, or United Nations Organization Class 1 hazardous materials and that meets the soil cover depth and slope requirements of NASA STD 8719.12.

Electroexplosive device.—Device containing some reaction mixture (explosive or pyrotechnic) that is electrically initiated. The output of the initiation is heat, shock, or mechanical action.

Electrostatic discharge.—Arcing of electric charge across a gap between two points not in contact or through a nonconductor when the voltage exceeds the dielectric breakdown voltage of the nonconductor. All static electricity hazards are initiated by this sudden energy release or discharge mechanism.

Energetic liquid.—Liquid, slurry, or gel consisting of, or containing, an explosive, oxidizer, fuel, or combination of the above, that may undergo, contribute to, or cause rapid exothermic decomposition, deflagration, or detonation.

Explosive wastes.—Explosive materials or devices that are no longer useable or no longer wanted or needed and have no intended use (see 40 CFR 261).

Explosives.—Any chemical compound or mechanical mixture that, when subjected to heat, impact, friction, detonation, or other suitable initiation, undergoes a very rapid chemical change with the evolution of large volumes

of highly heated gases that exert pressures in the surrounding medium. The term applies to materials that either detonate or deflagrate.

Exposed site.—Location exposed to the potential hazardous effects (blast, fragments, debris, and heat flux) from an explosion at a potential explosive site.

Flyings.—Lightweight airborne particles.

Glenn Research Center (GRC)

High explosive.—Explosive in hazard division 1.1 through 1.6 that, once initiated, transforms with virtually instantaneous and continuous speed through the total mass, accompanied by the rapid evolution of a large volume of gas and heat, causing very high pressure and a widespread shattering effect.

Hypergolic.—Self-igniting upon contact of the fuel and oxidizer, without a spark or external aid.

Inhabited building distance.—Minimum allowable distance between an inhabited building and an explosive facility. Inhabited building distances are used between explosives facilities and administrative areas, operating lines with dissimilar hazards, explosive locations and other exposures, and explosive facilities and installation boundaries.

Inhabited building.—Building or structure—other than operating buildings, magazines, and auxiliary buildings—occupied in whole or in part by human beings, or where people are accustomed to assemble—both within and outside of Government establishments. Land outside the boundaries or local restrictive easement estate of NASA establishments shall be considered as inhabited buildings (Requirement).

Intraline distance.—Minimum distance permitted between any two buildings within one operating line. Intraline distances are also used for separating certain specified areas, buildings, magazines, aircraft, and other locations even though actual line operations are not involved. Intraline distance separation is expected to protect explosive materials in buildings from propagation detonation due to blast effects, but not from the possibility of propagation detonation due to fragments. Buildings separated by intraline distances will probably suffer substantial structural damage.

Laboratory operation.—Operation in a laboratory where the total quantity of explosives in the facility does not exceed 500 g.

Liquefied natural gas (LNG)

Magazine.—Structure designed or specifically designated for the storage of explosives.

Magazine distance.—Minimum distance permitted between any two storage magazines. The distance required is determined by the type(s) of magazine and also the type and quantity of explosives stored therein.

Mass detonation or explosion.—Virtually instantaneous explosion of a mass of explosives when only a small portion is subjected to fire, severe concussion or impact, the impulse of an initiating agent, or to the effect of a considerable discharge of energy from an outside stimulus.

Military standard (MIL STD)

NASA Procedural Requirement (NPR)

NASA Safety Standard (NASA-STD-)

NASA Standard (NASA STD)

National Electrical Code (NEC)

National Fire Protection Association (NFPA)

Net explosive weight.—Total quantity, expressed in pounds, of explosive material or pyrotechnics in an item.
Occupational Safety and Health Administration (OSHA)

Operating building.—Any structure, except a magazine, in which operations pertaining to manufacturing, processing, or handling explosives are performed.

Operational shield.—Barrier constructed to protect personnel, material, or equipment from the effects of a possible fire or explosion occurring at a particular operation.

Personal protective equipment (PPE)

Plum Brook Station (PBS)

Potential explosive site (PES).—Location of a quantity of explosives that will create a blast fragment, thermal, or debris hazard in the event of an accidental explosion of its contents.

Propellant, liquid.—Substances in fluid form (including cryogenics) used for propulsion or operating power for missiles, rockets, and other related devices (see Table XXIII of NASA-STD- **8719.12**). For the purpose of this chapter, liquid fuels and oxidizers are considered to be propellants even when stored and handled separately.

Propellant, solid.—Explosives compositions used for propelling projectiles and rockets and to generate gases for powering auxiliary devices.

Public traffic route distance.—Distance to be maintained between a potential explosion site and any public street, road, or highway, navigable stream, or passenger railroad (includes roads on NASA field installations that are open to the public for thoroughfare).

Pyrotechnic device.—Manufactured device or article containing pyrotechnic material(s). Common pyrotechnic devices include road flares, marine distress signals, and smoke grenades. Pyrotechnic devices may contain other explosive materials in addition to pyrotechnic materials.

Pyrotechnic material.—Explosive or chemical ingredients, including powdered metals, used in the manufacture of pyrotechnic devices.

Quantity-Distance (QD).—Quantity of explosives and distance separation relationships that provide defined types of protection. These relationships are based on levels of risk considered to be acceptable for the stipulated exposures and are tabulated in the appropriate QD tables.

Restricted area.—Area, usually fenced, at an establishment where the entrance and egress of personnel and vehicular traffic are controlled for reasons of safety.

Rocket.—Complete device that derives its thrust from ejection of hot gases generated from propellants carried in the vehicle.

Safety and Health Division (SHeD)

Service storage magazine.—Auxiliary building used for the intermediate storage of explosive materials not exceeding the minimum amount necessary for safe efficient production.

Simultaneous detonation.—Detonation of separated quantities of explosives occurring so nearly at the same time that the effect on the surroundings is the same as if the several quantities were not separated and were mass detonated.

Standard operating procedure (SOP)

Static test stand.—Locations on which liquid propellant engines or solid propellant motors are tested in place.

Storage compatibility.—Relationship between different explosives and other dangerous materials such that storing or transporting two or more of the items together is no more hazardous than storing or transporting a comparable quantity of any one of the items alone.

Storage magazine.—Structure designed or specifically designated for the long-term storage of explosives or ammunition.

Substantial dividing wall.—Interior wall designed to prevent simultaneous detonation of quantities of explosives on opposite sides of a wall.

Trinitrotoluene (TNT)

TNT equivalent.—Measure of the blast effects from an explosion of a given quantity of material expressed in terms of the weight of TNT that would produce the same blast effects when detonated.

Triboelectric charge.—Electrical charge produced by friction between two nonconductive materials.

Waiver.—Document that authorizes departure from a specific performance or operational requirement for a specified mission or period of time.

Contents

1.0 PURPOSE 2
2.0 APPLICABILITY 2
3.0 BACKGROUND 2
4.0 POLICY 2
5.0 RESPONSIBILITIES 2
5.1 NASA and Contractor Employees and Visitors to the Center 2
5.2 Office of Protective Services 2
5.3 Supervisor Personnel 3
5.4 Office of Human Capital Management 3
5.5 Office of Equal Opportunity Programs 3
5.6 Contracting/Grants Officer 3
5.7 Contracting/Grants Representative 3
5.8 Safety and Health Division 3
5.9 Facilities Division 3
5.10 Medical Services Office 3
5.11 Parking Review Committee 3
6.0 REQUIREMENTS 4
6.1 Motorized Traffic 4
6.1.1 Vehicle Equipment Regulations 4
6.1.2 Traffic Laws 4
6.1.3 Speed Limits 4
6.1.4 Operation of Vehicles 4
6.1.5 Hazard Operations 4
6.1.6 Parking Restrictions 4
6.1.7 Disabled or Abandoned Vehicles 5
6.1.8 Towing of Vehicles 6
6.1.9 Safety Belts and Child Restraints 6
6.1.10 Special Conditions 6
6.1.11 Hand-Held Wireless Communication Devices 6
6.1.12 Emergency Vehicles 6
6.2 Pedestrian Traffic 6
6.3 Safety Barricades 6
6.4 Authority of Protective Service Forces 7
6.5 Vehicle Equipment Offenses 7
6.6 Moving Violations 7
6.7 Parking Violations 8
6.7.1 Parking in a Posted Tow-Away Zone 8
6.7.2 Parking in a Yellow or Other Designated No-Parking Zone 8
6.8 Withdrawal of Center Badge Privileges 9
6.9 Motor Vehicle Accidents 9
7.0 RECORDS 9
8.0 REFERENCES 9
APPENDIX A.—DEFINITIONS AND ACRONYMS 11

CHAPTER 19—Vehicle and Pedestrian Safety

NOTE: *The current version of this chapter is maintained and approved by the Safety and Health Division (SHeD). The last revision date of this chapter was December 2011. The current version is located on the Glenn Research Center (GRC) intranet at http://smad-ext.grc.nasa.gov/shed/pub/gsm/gsm-manual.pdf.*
Approved by Chief of Safety and Health Division.

1.0 PURPOSE

This chapter addresses regulations and safe practices to be exercised by motor vehicle operators and pedestrians within the boundaries of Glenn Research Center (GRC), which includes Lewis Field and Plum Brook Station (PBS). The Ohio State Digest of Motor Laws is the primary reference document for this chapter.

2.0 APPLICABILITY

The provisions of this chapter are applicable to all persons, including NASA employees and support service contractor personnel and visitors, whether in a Government or privately owned vehicle (POV), on bicycle, or on foot, when they are within the boundaries of Lewis Field or PBS.

3.0 BACKGROUND

The vehicle and pedestrian safety chapter is created to address questions about safety practices or laws that are to be following by all pedestrians and operators of motor vehicles while on NASA property or operating a Government-owned or rented vehicle.

4.0 POLICY

It is GRC management policy that a policy be established and implemented in accordance with NASA Procedural Requirement (NPR) **8715.3C**, NASA General Safety Program Requirements.

5.0 RESPONSIBILITIES

5.1 NASA and Contractor Employees and Visitors to the Center

All persons within the boundaries of the Lewis Field and PBS shall be responsible for observing GRC traffic regulations and the safety practices specified in this chapter, both as a motor vehicle operator and as a pedestrian. All persons are responsible for operating vehicles under their control in a safe manner.

All NASA contractor and visitor personnel shall comply with Protection Force emergency lights, traffic hand signals, verbal traffic instructions, and other control measures, and shall present their Center badge and driver's license to Protection Officers upon request.

5.2 Office of Protective Services

The Office of Protective Services shall be responsible for

- Issuing of notices to personnel found in violation of these regulations.
- Administering the system for withdrawing Center badge privileges.
- Assisting in direction of emergency vehicles and traffic directed during emergencies and Center evacuation.
- Denying Center access to business licensees who fail to follow applicable visitor access procedures or who otherwise present a demonstrated threat to the safety or security of the Center.
- Maintaining a system of recording of all violations.
- Securing the towing of vehicles parked in a tow-away zone consistent with Section **6.1.8**, and providing notice of the type specified in Ohio Revised Code (ORC) 4513.60(D)(1).
- Investigating vehicle accidents and distributing required reports.

- Coordinating management support team assistance to cognizant management officials in the administration of this chapter for violations by individuals who are not NASA employees.

5.3 Supervisor Personnel

Supervisors shall be responsible for counseling their employees regarding traffic regulations at the Center and, in consultation with the Office of Human Capital Management and other management support organizations, for taking disciplinary or other appropriate management actions for specific violations of this chapter. Onsite contractors/grantees are similarly responsible for taking appropriate management action to assure the efficient performance of their contracts/grants in a manner consistent with the safety of the Center and consistent with GRC contract clause 52.209–90, Contractor Duties and Responsibilities On-Site.

5.4 Office of Human Capital Management

The Office of Human Capital Management shall be responsible for coordinating management support team assistance to cognizant management officials in the administration of this chapter for violations by NASA employees.

5.5 Office of Equal Opportunity Programs

The Office of Equal Opportunity Programs shall be responsible for assigning a parking permit for any individuals requesting a specific handicapped parking space.

5.6 Contracting/Grants Officer

The Contracting/Grants Officer shall be responsible for initiating appropriate contractual action in the event the contractor/grantee fails to comply with the requirements of GRC 52.209–90, Contractor Duties and Responsibilities On-Site.

5.7 Contracting/Grants Representative

Contracting/Grants Officer Representatives shall be responsible for advising contractor/grantee management of problems involving their employee's use of vehicles at the Center and for assuring that contractor/grantees take appropriate management action adequate to protect the safety and security of the Center.

5.8 Safety, Health and Environmental Division

SHED shall be responsible for developing, maintaining, and overseeing compliance of traffic safety in accordance with the NASA Safety Policy and Requirements document and this chapter.

5.9 Facilities Division

Facilities Division shall specify the traffic control devices needed for regulating flow of traffic (such as signals, signs, and markings placed on or adjacent to GRC roads) and parking lot markings (including signs and barricades) for special parking requirements as required by the Ohio Manual of Uniform Traffic Control Devices (OMUTCD).

5.10 Medical Services Office

Medical Services Office shall be responsible for evaluating and approving requests for temporary parking of employees who require special accommodation as a result of a temporary or permanent physical disability.

5.11 Parking Review Committee

The Parking Review Committee (PRC) shall have two (2) members appointed by management and two (2) members appointed by LESA, one (1) primary and one (1) alternate for each which will report to the Mission Support Council (MSC). The goal of the PRC is to identify problems and devise potential solutions that would avoid future instances of illegal parking.

As parking violations are documented via tickets, the Office of Protective Services will compile the data and make said data available to the PRC via the Traffic Violations database.

The PRC shall be responsible for reviewing excessive parking tickets by individuals and recommend disciplinary actions. The PRC will also review with the Office of Protective Services, SHED, and Facilities Division, for any systemic parking issue trends that may require additional study and action.

6.0 REQUIREMENTS

6.1 Motorized Traffic

6.1.1 Vehicle Equipment Regulations

Regulations governing the operation of motor vehicles within GRC are delineated as follows. The provisions of ORC Title XLV, as they relate to the operation of motor vehicles, are adopted into the Federal Criminal Code under Title 18 U.S.C. section 13. All persons operating or parking a vehicle on Center property shall fully comply with them.

Copies of ORC Chapter 4511, Traffic Laws—Operation of Motor Vehicles can be obtained from the Internet. Where provisions of Title XLV have been violated, vehicle operators may be cited and prosecuted for such violations. Violators are subject to appropriate disciplinary action. In addition, the administrative actions set forth in Sections **6.6**, **6.7**, and **6.8** will be taken.

6.1.2 Traffic Laws

In addition to obeying applicable Ohio traffic laws, GRC employees, contractor personnel and visitors shall obey the rules specific to Lewis Field or PBS. Traffic regulations specific to GRC are given in this section.

6.1.3 Speed Limits

Speed will be monitored by a radar device or observation by Protective Service personnel.

The speed limits for Lewis Field shall be as follows:

- 25 mph unless otherwise posted
- Gate entrance speed is 15 mph or controlled by hand and arm signals by Protective Service personnel consistent with badge identification, weather conditions, and other access control requirements
- 10 mph in parking lots and parking areas

Operators of motor vehicles shall reduce their speeds and exercise caution when driving during the hours of darkness, inclement weather, or when other hazardous conditions exist.

The speed limits for PBS shall be as follows:

- 35 mph unless otherwise posted
- 10 mph when entering or leaving station gates
- 10 mph in parking areas

Due to the high deer population at Plum Brook, operators of motor vehicles shall reduce their speeds whenever deer are seen in close proximity to the roadways and use extreme caution when driving during the hours of darkness, inclement weather, or when hazardous conditions exist.

6.1.4 Operation of Vehicles

Motor vehicles (including motorcycles and bicycles and other non-motorized vehicles) shall be operated at GRC in a manner consistent with the requirements of ORC Title XLV as adopted into the U.S. Criminal code by 18 U.S.C. section 13. This includes the requirement set forth in ORC 4511.441 that vehicles yield to pedestrians in crosswalks.

6.1.5 Hazard Operations

During hazardous test operations at GRC, roads traversing any controlled access areas will be barricaded in accordance with conditions stated in the safety permit to deny traffic passageway through these areas. Barricades must, however, provide for emergency vehicle access.

6.1.6 Parking

All No Parking and Tow Away Zones will be clearly marked by signage, which supersedes curb painting. This signage shall be consistent with Ohio Standards.

Tow Away Zones will consist of the 2o-foot area extending 10 feet on either side of fire hydrants, the ambulance entrance on the south side of Building 15, or other clearly marked areas that have been agreed upon by the Center and LESA.

With the exception of temporary construction and accident areas, the Center shall not make any permanent changes that would decrease on-street parking areas in effect at the time of issuance/implementation of this document.

Parking Restrictions

Parking shall not be permitted:

- In designated no parking zones or areas which include handicap parking without proper license plate or dashboard placard, temporary disabled employee parking, or within 10 ft of fire hydrants
- In a manner that prevents access by emergency vehicles (or other established red emergency access zones)
- On grass unless approved as a construction site
- On crosshatched areas
- On sidewalks
- Against the flow of traffic on streets and parking lots
- Alongside a vehicle located at the curb
- On the streets during periods when a parking ban is in effect
- By personal vehicles in government slots

Short-term parking areas have been established near some buildings which have high transient traffic. These areas are clearly posted, and parking for periods longer than specified is considered a parking violation. Short-term parking areas at GRC include, but are not limited to, the following:

- The west side of Walcott Road in front of the Research Analysis Center (Building 142)
- Adjacent to Building 15 (south lot).

Visitor parking areas shall be used by visitors only, as indicated by the visitor parking signs. GRC employees and support service contractor personnel are not authorized to park in visitor parking areas.

Long-term parking of personal vehicles is defined as a situation in which an employee elects to leave his or her car at the Center beyond his or her normal assigned working hours. This situation normally occurs when an employee departs the Center on official travel for one (1) or more days. While long-term parking is permissible in such a situation, round-the-clock parking can pose problems in day-to-day Center operations such as parking lot repair and maintenance and snow removal activities during the winter months. Therefore, employees who need to leave their vehicles on the Center for a period in excess of 24 hours shall park their vehicles in the Hangar parking lot. At Plum Brook Station, employees should contact the Office of Protective Services for instructions.

Handicapped parking spaces are designated for individuals who have the proper license plate or dashboard placard. Handicapped Parking Permits for specific parking spaces can be obtained through the Office of Equal Opportunity Programs.

6.1.7 Disabled or Abandoned Vehicles

Disabled vehicles which are unattended and identified as disabled (by a white cloth on the left door and flashing warning devices) while the operator is getting assistance will not be cited for violation of regulations during such reasonable period as is necessary to obtain assistance. To assure that any such period is considered reasonable, the operator of a disabled motor vehicle shall notify Protective Services promptly. Title of abandoned vehicles as defined in 41 Code of Federal Regulations (CFR), Subchapter H, 101–48, Utilization, Donation or Disposal of Abandoned and Forfeited Personal Property, shall be vested in the U.S. Government in accordance with those provisions through the Logistics and Technical Information Division.

6.1.8 Towing of Vehicles

Vehicles parked in a tow-away zone, crosswalks, abandoned, or creating a safety hazard are subject to issuance of a ticket and tow. A tow company shall be summoned to remove the vehicle in accordance with ORC 4513.60(B)(2) to the tow company's impound lot. Removal of private vehicles will be at the owner's risk and expense. Government vehicles parked in a tow-away zone or creating a safety hazard will be moved by motor pool personnel.

6.1.9 Safety Belts and Child Restraints

Ohio's mandatory safety belt usage law (ORC 4513.263) requires drivers and front-seat occupants of most passenger vehicles to wear their safety belts whenever they drive or ride on Ohio's roadways. Executive Order 12566, “Safety Belt Use Requirements for Federal Employees,” mandates use of safety belts in Federal vehicles and on Federal property.

6.1.10 Special Conditions

Drivers shall take additional precautions when driving in special conditions, such as at night, during the winter, in fog, and on freeways. Drivers shall also be alert for any wildlife that may wander into the roadway. Drivers shall drive defensively and be prepared for the mistakes of others.

6.1.11 Hand-Held Wireless Communication Devices

The use of hand-held wireless communication devices shall be prohibited when driving a motor vehicle on NASA property or operating a NASA vehicle both on and off NASA property. This would also include operating a POV. This includes cell phones (talking and texting), UHF radios, or other hand-held wireless communication devices. The only exception is emergency, Protective Service, and fire vehicles during official operations. This is in accordance with NPR 8715.3C and the Presidential Executive Order 13513.

6.1.12 Emergency Vehicles

Emergency vehicles (i.e., safety, Protective Service, ambulance, and fire vehicles) shall exercise caution when responding to emergencies and are to be granted the right-of-way by operators of all other motor vehicles. Emergency vehicles are required to comply with all traffic and parking regulations except when compliance would demonstrably interfere with their ability to carry out safety, Protective Service, and/or fire protection responsibilities. Drivers of emergency vehicles are obligated to drive and park at all times with due regard for the safety of all persons and property within GRC premises to comply with the controls established by their cognizant management chain relative to vehicle operations. Vehicle operators shall yield the right-of-way to responding emergency vehicles.

6.2 Pedestrian Traffic

Traffic safety is just as much a matter of concern for the pedestrian as for motor vehicle drivers. Under ORC Title XLV, the pedestrian has definite rights as well as certain duties and responsibilities in traffic. Knowledge of traffic laws is the pedestrian's best protection in traffic, that is, his/her best defense against death or injury from an accident. Although vehicles are required to yield to pedestrians in crosswalks, pedestrians are expected to walk defensively and be prepared for the mistakes of others.

6.3 Safety Barricades

To protect personnel, engineering controls shall be used in hazardous areas to the extent feasible. The safety barricades outlined in this chapter do not pertain to construction zones or street closures. Where required because of the severity of the hazard, permanent barricades shall be used to prevent access to an area. In such a case, use the standardized color code system for barricades and beacons/warning lights:

- Red (or red and white) means DANGER—KEEP OUT
- Yellow means CAUTION (follow instructions on posted signs)
- White represents all other meanings/instructions (traffic awareness)

In keeping with this code, the Center uses ropes or chains with red and white flags as safety barricades to designate hazardous areas. For personal safety, these barricades must not be crossed. These ropes/chains with red and white flags are erected to protect you. If you need to access an area that is barricaded, you must first obtain permission from the Building Manager or Area Supervisor.

Chains with red and white flags denoting danger shall be used solely to designate hazardous areas. They can be obtained and used only if they are specified in a barricade plan that is part of the Safety Permit. The barricade plan shall include the locations of and use of all barricades, chains/flags, warning beacons/lights, warning sirens, and appropriate signs. The approved barricade plan must be submitted with a work request to SHeD, who will review and approve the work request on the basis of the barricade plan (GLM–QS–1700.1, Glenn Safety Manual, Chapter **29**).

Consistent with GRC's absolute commitment to safety and to alerting personnel of any potential danger to their health and well-being, signs must be posted with all warning beacons, warning lights, and barricades. SHeD has standardized the design of and will assist in developing the proper wording for these signs. The sign must display the appropriate warning word ("DANGER" or "CAUTION") and the specific hazard, the means of protecting oneself from the hazard, and the consequences of not following the instructions on the sign.

If someone is observed crossing a barricade, please take the following actions:

- inform the person of the reason for the barricade, and ask that the person not cross the barricade
- report the incident to the Protective Services Office, along with the person's name, so that the person can be reminded of the safety barricade guidelines
- if immediate action appears necessary to avoid imminent danger, contact the GRC Emergency Dispatch by calling 911 on a desk phone or 216–433–8888 by cell phone at Lewis Field or 419–621–3222 at PBS

6.4 Authority of Protective Service Forces

All persons within the GRC premises shall comply with any lawful order, signal, or direction given by any member of the Protective Service Force in connection to the movement of traffic, parking of vehicles, and investigation of traffic accidents.

6.5 Vehicle Equipment Offenses

Persons operating a vehicle in need of repair will be issued a warning ticket and will have 24 hours to effect necessary repairs, with the exception of those items that present an immediate safety hazard (e.g., leaking gas tank) for which the safe removal of the vehicle from the Center must be immediately arranged. Any second offense for the same unrepaired item will result in a NASA traffic notice and the vehicle will not be permitted on Center premises until satisfactory repairs to the equipment are made.

6.6 Moving Violations

Upon observing evidence that a moving violation has been committed, the member of the Protective Service Force making the observation shall complete a traffic notice citing the applicable Ohio traffic code(s). Administrative action will be taken for the moving violations specified below.

Traffic violations affecting the safety of the Center include

- Excessive Speed (ORC 4511.21, Speed Limits, and ORC 4511.211, Speed Limits for Private Roads and Driveways); speeds in excess of the posted speed limit are considered excessive
- Driving While Under the Influence of Alcohol or Drugs (ORC 4511.19)
- Willful or Wanton Disregard for Safety (ORC 4511.201)
- Right-of-Way of Public Safety Vehicles (ORC 4511.45)
- Creating a substantial potential for injury or interference with a safety response (Applicable code violation)
- Failure to comply with direction signal of safety personnel carrying out assigned responsibilities in connection with the moving of traffic or parking of vehicles

The commission of any of the above listed violations may result in the issuance of a traffic citation. Violations affecting the safety or security of the Center by employees of NASA or of NASA's contractors/grantees/visitors will be referred for appropriate disciplinary or other management action in accordance with GLPD 1900.3, Managing Conduct and Other Employee Issues.

In addition, a NASA ticket will be issued for each violation affecting the safety of the Center, and six points will be assessed toward withdrawal of the badge privileges of the violator.

For any other moving violation, a NASA ticket will be issued, and two points will be assessed toward withdrawal of the badge privileges of the violator. Moving traffic violations may be referred to the U.S. Attorney for prosecution under applicable law. In addition to the penalties set forth in this section, individuals are subject to appropriate discipline (in accordance with GLPD 1900.3) for traffic violations.

To the extent applicable, all actions taken in accordance with this section are subject to relevant provisions and terms of the Center-union labor agreements.

6.7 Parking Violations

The actions set forth in this section will be taken to ensure compliance with GRC traffic regulations by Federal employees, construction and support service contractor personnel, and visitors who drive or park on the Center.

6.7.1 Parking in a Posted Tow-Away Zone

Towing in accordance with ORC 4513.60(B)(2) and referral for appropriate disciplinary or other management action in accordance with GLPD 1900.3, Managing Conduct and Other Employee Issues.

6.7.2 Parking in a Designated No-Parking Zone

A NASA ticket will be issued for each violation. The Office of Protective Services will compile the data and make said data available to the PRC via the Traffic Violations database.

A parking violation will be defined as one specific instance of illegal parking, regardless of duration, unless the duration causes the offense to fall into a more serious category, such as abandoned vehicles.

An individual will be considered to have received an “excessive” number of parking violations as follows:

- Upon receipt of two (2) tickets for parking in any tow-away zone within any consecutive two-month period
- Upon receipt of three (3) tickets for other illegal parking, in the same location within any consecutive three-month period
- Upon receipt of six (6) tickets for any type of illegal parking within any consecutive six-month period

When data gathered by the PRC indicates an individual has received an excessive number of parking tickets, that person will be contacted to meet with the PRC to discuss the circumstances that resulted in issuance of parking tickets, with the goal of trying to identify any problems, or devise potential solutions that would avoid future instances of illegal parking. Any non-management, civil service employee scheduled to meet with the PRC is entitled to have union representation other than the PRC LESA member, if desired.

If an individual refuses to meet with the PRC, or ignores scheduled meetings, or if, after meeting with the PRC, in the opinion of the PRC, is not likely to abide by Center parking regulations, that individual may be referred to the Office of Human Capital Management for appropriate disciplinary action. Appropriate disciplinary action under this agreement is limited to revocation of an individual’s driving privileges, for a specified period of time, on the GRC. During any such time of revocation, the individual involved must, if operating a vehicle, must park their vehicle at the Main Gate (vice building 500) and walk, take the Lab Bus, or make arrangements to move around the GRC without driving a vehicle (including bicycle, motor bike, or any vehicle within the meaning set forth in the GRC Safety Manual (Chapter 19)). If an individual is caught driving during any such period of revocation, they may be referred for other disciplinary action above and beyond the limited disciplinary action cited above.

In the case of a contractor, grantee, or other individual not subject to the oversight of the Office of Human Capital Management, a finding which describes the excessive parking violations, along with a recommendation from the PRC will be issued to the Contracting Officer or other government official responsible for the legal document that allows or requires access to the GRC. That recommendation will describe the procedure followed by the PRC, and will reference what, if any, disciplinary action would have been recommended by the PRC, had the individual been a

civil servant employee. Such information provided by the PRC is forwarded only for consideration; any action taken is at the sole decision of the Contracting Officer or COTR. Nothing in this Agreement shall supersede the requirements of "Contractors" Duties and Responsibilities on-Site (GRC 52.209-90)" or other such clause establishing the proper conduct and oversight of personnel given access to GRC.

If an individual disagrees with an issued citation, they may submit a written request for review of said violation by the PRC. The submittal shall state the reason(s) why the individual disagrees with the contested decision. After review, the PRC will make a determination to uphold or overturn the citation and will provide a written decision to the submitter.

All decision of the PRC, whether to uphold or overturn issued citations, counsel an individual with regard to parking violations, or refer an individual for revocation of driving privileges, will be final and not open to challenge or grievance.

6.8 Withdrawal of Center Badge Privileges

Withdrawal of Center badge privileges as defined in the context of this chapter means that the NASA badge issued to an individual to facilitate ready access to the Center will be rescinded, and for the period of rescission the individual will only be allowed access to the Center in the same manner as any other non-badged visitor. Badges shall be rescinded (for a minimum period of 30 days or more as determined by the Safety, Health and Environmental Board) whenever the number of points assessed toward the withdrawal of an individual's badge privileges equals or exceeds 12 during the immediately preceding 12 months. Such rescission shall continue until the number of points assessed toward the withdrawal of the individual's badge privileges in the immediately prior 12 months falls below 12. However, the number of points assessed against an individual's badge privileges will be reduced by two (2) for every 30 days the individual's badge has been rescinded pursuant to this chapter. The rescission of badges and the physical recovery of rescinded badges will be affected under the administration of the Office of Protective Services, with appropriate support from cognizant management officials.

In addition to any rescission-based traffic violations, badges shall be immediately be rescinded (for a minimum period of 30 days) for any misuse of a badge in obtaining access to the Center or for failure to follow visitor access procedures during the period an individual's badge is rescinded. Such rescission will continue for any additional period necessary to obtain reasonably adequate assurance that Center visitor access procedures will be followed in the future. For business licensees who do not have badge privileges, Center access will be denied for failure to follow visitor access procedures and instructions or for any other demonstrated threat to the safety (including disregard of traffic/parking requirements) or security of the Center.

6.9 Motor Vehicle Accidents

Motor vehicle accidents occurring on GRC premises and involving property damage or personal injury shall be reported immediately by the person(s) involved as appropriate. This reporting requirement applies to accidents involving privately owned and/or Government vehicles. The Office of Protective Services shall investigate the circumstances and inform the persons involved as to the reports and other documents that must be completed and the required action to be taken. In the West Area and Development Engineering Building (DEB) parking lot, which are subject to Cleveland or Brook Park jurisdictions, the cognizant local police agency is responsible for the investigation of motor vehicle accidents.

7.0 RECORDS

- NASA tickets maintained by the Office of Protective Services.
- Handicapped parking permits maintained by the Office of Equal Opportunity Programs.

8.0 REFERENCES

Document number	Document name
NPR **8715.3C**	NASA Procedural Requirements, General Safety Program Requirements
41 CFR Subchapter H, 101–48	Utilization, Donation or Disposal of Abandoned and Forfeited Personal Property

Executive Order 12566	U.S. Code Congressional and Administrative News. 1986. Safety Belt Use Requirements for Federal Employees
	Federal Personnel Manual—1983—NASA—Chapter 930, Subchapter 1, Appendix A: Table of Disciplinary Offenses and Penalties for Employees in the National Aeronautics and Space Administration
Executive Order 13513	The White House—Executive Order—Federal Leadership on Reducing Text Messaging While Driving
GLPD 1900.3	Managing Conduct and Other Employee Issues
GLPD 4020.1	Survey of Lost, Damaged, or Destroyed Property, as revised
GLPD 6730.2	Glenn Motor Vehicle Management and Vehicle Use Program, as revised
	Ohio Revised Code Traffic Laws (Chapter 4511) as adopted into the U.S. Criminal Code by 18 U.S.C. Section 13
GLM–QS–1700.1	NASA Safety Manual Procedures and Guidelines
NPR 1620.3	NASA Security Handbook
NPR 3752.1	Delegation of Authority—To Take Disciplinary Actions, Adverse Actions and Reductions in Grade or Removals Based on Unacceptable Performance, as revised

APPENDIX A.—DEFINITIONS AND ACRONYMS

Code of Federal Regulations (CFR)

Development Engineering Building (DEB)

Glenn Research Center (GRC)

NASA Procedural Requirement (NPR)

Ohio Manual of Uniform Traffic Control Devices (OMUTCD)

Ohio Revised Code (ORC)

Plum Brook Station (PBS)

Privately Owned Vehicle (POV)

Safety and Health Division (SHeD)

Safety Mission Assurance Directorate (SMAD)

Contents

1.0 PURPOSE 4
2.0 APPLICABILITY 4
3.0 BACKGROUND 4
4.0 POLICY 5
5.0 RESPONSIBILITIES 5
5.1 Safety and Health Division (SHeD) Lifting Device and Equipment Program Lead 5
5.2 Supports the LDEM in carrying out their responsibilities and implementation of 8719.9 at GRC Lifting Device and Equipment Manager 5
5.3 Program and Project Assurance Division 6
5.4 Facilities Division 6
5.5 Logistics and Technical Information Division 6
5.6 Center Director 6
5.7 Lifting Device and Equipment Operator's/User's Supervisor 6
5.8 Employees Who Design, Fabricate, Construct, Maintain, and Repair Lifting Devices and Equipment 6
5.9 Certified Crane Operators and Riggers 7
5.10 Critical Lift Monitor 7
5.11 Certified Powered Industrial Trucks and Aerial Lift Operators 7
6.0 REQUIREMENTS 7
6.1 General Requirements Applicable to All Types of Lifting Devices 7
6.1.1 Critical Lifting Operations (using any type of LDE) 8
6.2 Variance Process 9
6.3 Inspections 9
6.4 Purchasing 10
6.5 Training and Licensing 10
6.6 Medical Surveillance 10
6.7 Overhead Crane Requirements 12
6.7.1 Hardware Requirements for Overhead Cranes used for Critical Lifts 12
6.7.2 Marking Requirements for Overhead Cranes 13
6.7.3 Load Test and Inspection Requirements for Overhead Cranes 13
6.7.4 Training Requirements for Overhead Cranes, Mobile Cranes and Derricks, Hoists and Winches, Hydra-sets, and Forklifts 14
6.7.5 Operating Requirements for Overhead Crane Operations 15
6.7.6 Operating Requirements for Cab-Operated Cranes 16
6.8 Mobile Cranes and Derricks 16
6.8.1 Critical Lift Hardware Requirements for Mobile Cranes and Derricks 17
6.8.2 Marking Requirements for Mobile Cranes and Derricks 17
6.8.3 Load Test and Inspection Requirements for Mobile Cranes and Derricks 17
6.8.4 Training Requirements for Mobile Cranes and Derricks 18
6.8.5 Operating Requirements for Mobile Cranes and Derrick Operations 18
6.9 Hoists and Winches 20
6.9.1 Hardware Requirements for Manually Operated (non-powered) Hoists and Winches used in Critical Lifts 20
6.9.2 Critical Lift Hardware Requirements for Powered Hoists and Winches used in Critical Lifts 20
6.9.3 Marking Requirements for Hoists and Winches 21
6.9.4 Load Test and Inspection Requirements for Hoists and Winches 21
6.9.5 Training Requirements for Hoists and Winches 22
6.9.6 Operating Requirements for Hoist and Winch Operations 22
6.10 Hydra-sets and Load-Measuring Devices 23
6.10.1 Hardware Requirements for Hydra-sets and Load-Measuring Devices used in Critical Lifts 23
6.10.2 Marking Requirements for Hydra-sets and Load-Measuring Devices 23

6.10.3 Load Test and Inspection Requirements for Hydra-sets and Load-Measuring Devices.....23
6.10.4 Training Requirements for Hydra-sets and Load-Measuring Devices 23
6.10.5 Operating Requirements for Hydra-sets and Load-Measuring Device Operations 24
6.11 Sling and Rigging Requirements 24
6.11.1 Hardware Requirements for Slings and Rigging Used in Critical Lifts 24
6.11.2 Marking Requirements for Slings and Rigging 24
6.11.3 Load Test and Inspection Requirements for Slings and Rigging 25
6.11.4 Training Requirements for Riggers 26
6.11.5 Operating Requirements for Rigging Operations 27
6.12 Aerial Lifting Devices 28
6.12.1 Marking Requirements for Aerial Lifting Devices.....28
6.12.2 Load Test and Inspection Requirements for Mobile Aerial Platforms 28
6.12.3 Training Requirements for Mobile Aerial Platforms.....29
6.12.4 Operating Requirements for Mobile Aerial Platform Operations 29
6.13 Powered Industrial Trucks (Forklifts).....30
6.13.1 Critical Lift Hardware Requirements for Powered Industrial Trucks 30
6.13.2 Marking Requirements for Powered Industrial Trucks 30
6.13.3 Load Test and Inspection Requirements for Powered Industrial Trucks.....30
6.13.4 Training Requirements for Powered Industrial Trucks 31
6.13.5 Operating Requirements for Powered Industrial Trucks 32
6.14 Jack Requirements.....35
6.14.1 Critical Lift Hardware Requirements for Jacks.....35
6.14.2 Marking Requirements for Jacks.....35
6.14.3 Load Test and Inspection Requirements for Jacks 35
6.14.4 Training Requirements for Jacks.....36
6.14.5 Operating Requirements for Jack Operations.....36
7.0 RECORDS.....37
8.0 REFERENCES 37
APPENDIX A.—DEFINITIONS AND ACRONYMS.....38
APPENDIX B.—CRITICAL LIFT PROCEDURE TEMPLATE.....42
APPENDIX C.—TYPICAL LIFT TEAM ROLES AND RESPONSIBILITIES 46
C.1 Lead/supervisor 46
C.2 Lift monitor 46
C.3 Crane operator 46
C.4 Riggers.....46
C.5 Safety.....47
APPENDIX D.—APPROVED HAND SIGNALS FOR OVERHEAD CRANES 48
APPENDIX E.—HAND SIGNALS FOR MOBILE CRANES 49
APPENDIX F.—ADDITIONAL RIGGING INFORMATION.....52
F.1 Eyebolts 52
F.2 Shackles.....52
F.2.1 Shackle Selection 52
F.2.2 Shackle Inspection.....53
F.2.3 Shackle Use 53
F.3 Slings 54
F.3.1 Sling Selection.....54
F.3.2 Vertical Hitches.....54
F.3.3 Turning Hitches.....55
F.3.4 Choker Hitches.....55
F.3.5 Double Choker Hitch 56
F.3.6 Double Wrap Choker Hitch.....56
F.3.7 Basket Hitches.....56
F.3.8 Double Basket Hitches 56
F.3.9 Double Wrap Basket Hitches 57
F.3.10 Bridle Hitches.....57
F.4 Plate Clamps 57

F.4.1 Inspecting Plate Clamps 57
F.4.2 Using Plate Clamps 58
F.5 Wire Rope Slings 59
F.5.1 Sling Selection 59
F.5.2 Inspection of Slings 59
APPENDIX G.—SAMPLE CRANE FMEA 61
G.1 FMEA Notes 62

List of Tables

TABLE G.1.—SYSTEM TABLES 62
TABLE G.2.—SEVERITY DETERMINATION TABLE 76
TABLE G.3.—PROBABILITY DETERMINATION TABLE 76
TABLE G.4.—RISK ASSESSMENT CODE MATRIX 76
TABLE G.5.—RISK ASSESSMENT CODES (RAC) AT GRC 76

List of Figures

Figure D.1.—Standard hand signals for controlling overhead and gantry cranes. 48
Figure E.1.—Standard hand signals for controlling mobile cranes. 49
Figure E.2.—Continued. 50
Figure E.3.—Concluded. 51
Figure F.1.—(a) and (b) Improper use of eyebolts. (c) and (d) Safe use of eyebolts. 52
Figure F.2.—Shackle types. 53
Figure F.3.—Shackle inspection. 53
Figure F.4.—Shackle use. 53
Figure F.5.—The effects of angle on a sling's load limit. 54
Figure F.6.—Vertical hitch. 55
Figure F.7.—Turning hitch. 55
Figure F.8.—Choker hitch. 55
Figure F.9.—Double choker hitch. 56
Figure F.10.—Double wrap choker hitch. 56
Figure F.11.—Basket hitch. 56
Figure F.12.—Double basket hitch. 57
Figure F.13.—Double wrap basket hitch. 57
Figure F.14.—Bridle hitch. 57
Figure F.15.—Plate clamp. 58
Figure F.16.—Using plate clamps safely. 58
Figure F.17.—Proper installation of clips. 59

Chapter 20—Lifting Devices and Equipment

NOTE.—*The current version of this chapter is maintained and approved by the Safety and Health Division (SHeD). The last revision date of this chapter was July 2012. The current version is maintained on the Glenn Research Center (GRC) intranet at http://smad-ext.grc.nasa.gov/shed/pub/gsm/gsm-manual.pdf. Approved by Chief of Safety and Health Division.*

1.0 PURPOSE

This program establishes NASA's minimum requirements for the design, testing, inspection, maintenance, personnel certification, and operation of lifting devices and equipment (LDE) at the Glenn Research Center's (GRC) Lewis Field and Plum Brook Station. These requirements are established in accordance with the National Aeronautics and Space Administration (NASA) Standard **8719.9** to minimize risk to personnel and property, to ensure that individuals performing lifting functions are trained to perform their work in accordance with applicable safety and health standards, and to ensure that high-risk operations are conducted with the highest standards of safety and performance while supporting the Center's mission.

2.0 APPLICABILITY

This chapter applies to GRC at Lewis Field and Plum Brook Station. The provisions, responsibilities, and requirements as set forth in this chapter apply to all NASA GRC civil servant employees, NASA support service contractors, construction and maintenance contractors and subcontractors, other Government agency employees, and other organizations that perform lifting activities within the confines of the GRC. This chapter applies to all applicable equipment whether owned by NASA, rented, or brought onsite by a contractor.

This program applies to

- overhead and gantry cranes (including top-running monorail, underhung, and jib cranes)
- mobile cranes
- derricks
- hoists
- winches
- special hoist-supported personnel lifting devices
- Hydra-sets
- load-measuring devices
- hooks, slings and rigging
- mobile aerial platforms
- powered industrial trucks
- jacks

This document does not include coverage for front-end loaders and elevators.

3.0 BACKGROUND

Fatalities, serious injuries, damaged or lost hardware, and project failure can occur if industrial equipment is not inspected and used properly. Many fatalities can occur when workers are struck by a load, are caught inside the swing radius, or fail to assemble or disassemble the equipment properly.

The Glenn Lifting Device and Equipment program was developed to maintain and preserve the safety of our employees, infrastructure and equipment as well as flight and research hardware and ground support equipment (GSE) by minimizing hazards associated with material handling. The program established minimum guidelines for lifting devices, operator training and certification, and hardware design and analysis.

4.0 POLICY

It is GRC's policy that all LDE are designed, analyzed, tested, inspected, maintained, operated and used in accordance with Occupational Safety and Health Administration (OSHA) standards and NASA's Standard for Lifting Device and Equipment (**8719.9**).

5.0 RESPONSIBILITIES

The responsibility for the implementation and maintenance of GRC safety policies and standards is delegated to the management level. Depending on the situation, the personnel safety certification process may be managed by either the head of the organization, the facility manager, or the first-line supervisor where the function is being performed. All personnel involved with lifting devices and equipment and operations shall be familiar with NASA Standard for Lifting Devices and Equipment **8719.9** and this chapter.

5.1 Safety and Health Division (SHeD) Lifting Device and Equipment Program Lead

- Collaborates with the Lifting Device and Equipment Manager (LDEM) to develop LDE policies and procedures that meet NASA, OSHA, and "best practice" requirements
- Provides guidance and direction for center-wide activities that involve crane and lifting device safety using a team approach to solve challenges while minimizing impact to budget and schedule and meeting requirements and mission goals
- Performs programmatic audits of the program and works with the LDEM to perform functional audits
- Provides guidance and review (at the request of the LDEM) of critical lift procedures, related job hazard analyses, or lifting device equipment hazard analyses for equipment to be used for critical lifts
- Participates as an active member of the GRC Lifting Device and Equipment Committee (LDEC)
- Supports the LDEM in carrying out their responsibilities and implementation of 8719.9 at GRC

5.2 Lifting Device and Equipment Manager (LDEM)

- Serves as GRC interface with NASA Headquarters and other NASA centers on matters pertaining to LDE
- Serves as the GRC representative on the NASA LDEC
- Coordinates with affected center safety offices on issues of mutual interest
- Provides technical direction on lifting devices and operations at GRC
- Implements, along with SHeD, the NASA Standard for Lifting Devices and Equipment **8719.9** and the contents of this chapter
- Establishes the training and certification program for LDE operators and supervisors
- Certifies LDE operators
- Chairs the GRC LDEC
- Ensures that certification and/or recertification tests and inspections are performed by personnel who are properly qualified and certified in accordance with applicable codes and standards
- Provides advice on lifting devices
- Reviews safety variance requests prior to submittal to center management for approval
- Previews, approves, and monitors the training courses for qualifying LDE operators and defines their training and refresher training requirements
- Performs functional audits of the LDE program by establishing and maintaining a system for periodic inspection of LDE, including review of logbooks, identification of deficiencies, and completion of corrective actions

- Maintains overall responsibility for the management, implementation, and enforcement of the center's LDE, and Mobile Aerial Platform, Powered Industrial Truck and Critical Jack Recertification Program
- Serves as the Certifying Authority for the certification and recertification of LDE to which this directive is applicable
- Establishes and maintains a configuration management system for LDE

5.3 Program and Project Assurance Division

- Provides assistance when required for programmatic audits of the program
- Provides guidance and review of critical lift procedures, related job hazard analysis, or LDE hazard analysis for equipment to be used for critical lifts
- Supports critical lift activities

5.4 Facilities Division

- Maintains, inspects (monthly and annually), tests, and maintains records for all NASA-owned lifting devices and equipment at GRC at Lewis Field as per NASA **8719.9** and OSHA
- Notifies the LDEM of any planned LDE acquisition, installation, upgrade, and/or removal as part of any facilities project
- Submits all LDE designs and specifications to the LDEM for comment and review prior to contract implementation

5.5 Logistics and Technical Information Division

- Performs preventative maintenance and inspections on drive components of mobile cranes aerial lift platforms and forklifts
- Submits notices to the equipment point of contact (POC) notifying them the equipment is due for inspection and maintenance
- Maintains a database of inspection and maintenance items and findings for each piece of equipment

5.6 Center Director

The Center Director shall designate in writing at least one person and an alternate, with appropriate background in lifting devices, lifting operations, lifting equipment industry standards, and an understanding of lifting safety, as the Center's LDEM.

5.7 Lifting Device and Equipment Operator's/User's Supervisor

- Ensures that personnel who operate lifting devices are trained and certified in compliance with OSHA and NASA standards and this chapter
- Maintains employee training and medical records
- Ensures that a medical clearance exam, recertification, and refresher training are conducted prior to the expiration dates
- Maintains a list of operators certified to perform critical lifts and the specific devices employees are trained to operate
- Ensures that LDE are being tested and certified per OSHA and NASA standards and this chapter
- Holds the responsibility for ensuring employees are in compliance with this chapter and all applicable standards defined in this chapter

5.8 Employees Who Design, Fabricate, Construct, Maintain, and Repair Lifting Devices and Equipment

- Design hardware that meets the requirements in this chapter, the NASA Lifting Device and Equipment Standard (STD **8719.9**)

5.9 Certified Crane Operators and Riggers

- Perform and document daily (or first-use) inspections of cranes, hoists, and winches using the approved NASA form **C–144**, Operator's Pre-Use Checklist—Overhead Cranes, Hoists and Rigging, (or other LDEM-approved form)
- Lockout/tagout (LOTO) equipment immediately if any deficiencies are identified during the inspection
- Initiate process to get the equipment repaired.
- Inspect hooks, slings, and rigging prior to each use for damage; tag out and/ or remove those items found to be unsafe for use for service
- Ensure rigging and lift equipment are current in load test status and tag out and/ or remove those items out of date from service; initiate process to get the items load tested
- Maintain inspection documents at a location accessible to all operators
- Attend annual refresher trainings, a practical training every 4 years, and an annual medical clearance exam to stay in good standing with program requirements
- Perform all lifting activities in a manner that meets the requirements of this chapter, the NASA Standard for LDE, and OSHA

5.10 Critical Lift Monitor

The Critical Lift Monitor is responsible for the movement of hardware during a critical lift.

- Provides direction and commands to the crane operator during a lifting operation if so designated in the Critical Lift Procedure
- Instructs all personnel involved in the proper preparations, rigging, lifting, and final positioning to be achieved in the pre-lift briefing
- Does not perform rigging activities or hands-on operation of lifting devices
- Can be a safety professional, supervisor, engineer, or a task leader but must be a certified crane operator and be experienced in lifting operations

5.11 Certified Powered Industrial Trucks and Aerial Lift Operators

- Perform and document inspection prior to first use on each shift for powered industrial trucks and mobile aerial platforms; LOTO equipment immediately if any deficiencies are identified during the inspection; initiate process to get the equipment repaired
- Ensure equipment is within its preventative maintenance (PM) schedule (If PM is out of date, remove equipment from service (lockout or tagout) and initiate process to get equipment scheduled for PM.)
- Maintain inspection documents at a location accessible to all operators or with the equipment.
- Attend annual refresher trainings, a practical training every 3 years, and an annual medical clearance exam to stay in good standing with program requirements
- Perform all activities in a manner that meets the requirements of this chapter, the NASA Standard for LDE, and OSHA

6.0 REQUIREMENTS

6.1 General Requirements Applicable to All Types of Lifting Devices

(29 CFR 1910.179 Occupational Safety and Health Administration, Overhead and Gantry Cranes, 29 CFR 1910.184 Occupational Safety and Health Administration, Slings, 29 USC 654 (a)…General Duty Clause, NASA–STD–8719.9 NASA Standard, Lifting Devices and Equipment).

6.1.1 Critical Lifting Operations (using any type of LDE)

A critical lift is a lift where a failure or loss of control could result in loss of life or loss of or damage to flight hardware. Critical lifts also include

- lifts involving special, high-dollar items, such as spacecraft, one-of-a-kind articles, or major facility components, etc., whose loss would have serious programmatic or institutional impact
- lifting personnel with a crane
- lifts where personnel are required to work under a suspended load
- operations with special personnel and equipment safety concerns beyond normal lifting hazards
- lifting/lowering hazardous materials such as explosives

Also, a critical lift is designated if the Hazard Analysis for the lift identifies a high probability of damage to the lifting device or equipment that would result in significant repair costs and/or schedule delays.

6.1.1.1 Critical Lift Determination

The determination of whether or not a lift is considered critical can be made by program or project personnel, a Facility Manager or Facility Operations Engineer, the SHeD LDE Program Lead, or the GRC LDEM. The critical lift determination and rationale is documented on NASA Form C-195

The designation of an item as a critical lift does not require the concurrence of all parties. The GRC LDEM holds the final authority on determining a lift as a critical lift if a dispute were to occur. The results of the critical lift determination shall be documented by the project or facility in form C-195 and provided to the LDEM for concurrence.

6.1.1.2 Critical Lift Operational Requirements

A written lift procedure must be developed for critical lifts regardless of lifting device used (overhead crane, mobile crane, forklift, etc.). The procedure shall be submitted to the LDEM for review prior to the lift taking place. A template for this procedure is located in Appendix B; however, the project or organization may use its own document as long as it falls under the control of its configuration management plan. At a minimum, the procedure should include the following information

- Approving signatures
- Identification of the specific lifts that will be considered critical lifts
- List of personnel (job description or role) who will be present during the lift and their responsibilities
- Hardware and equipment that will be used for the lift (identify the crane(s) (type and capacity), rigging (type and capacity), forklift etc. that will be used in each lift)
- Description, picture, or model of the lift/rigging configuration
- Emergency procedures shall be developed for contingency actions such as power loss, brake failure, or other emergencies
- Pre-lift meeting
    - Establish safety zone
    - Establish team members and discuss their roles
    - Confirm communication method (who communicates to who and how, e.g., hand signals or radios)
    - Determine the lift procedure
- Communication requirements (pre-lift meeting, hand signals, radio devices etc.)
- A step-by-step work instruction on the rigging and lift

- A hazard analysis of the lifting hardware and a hazard analysis of the lift operation

Critical lift equipment operators must demonstrate proficiency and operating finesse with the lifting device to be used for the particular critical lift (or alternately be directly supervised by a certified operator during the demonstration of proficiency). This is in addition to the training, examination, licensing, and renewal requirements for noncritical lift operators. The operators must be knowledgeable of the specific hazards and special procedures associated with the critical lift. The operator's supervisor or facility manager can determine who meets the requirements of a certified lift equipment operator and will maintain a list of specific lifting devices for critical lifts that the operator is certified to operate.

6.1 Verification of compliance with these requirements is done by SHeD during periodic evaluation and assessments.

6.2 Variance Process

(29 CFR 1910.179 Occupational Safety and Health Administration, Overhead and Gantry Cranes, 29 CFR 1910.184 Occupational Safety and Health Administration, Slings, 29 USC 654 (a)…General Duty Clause, NASA–STD–8719.9 NASA Standard, Lifting Devices and Equipment).

Deviations or waivers from the requirements of this document or a NASA Standard (including design and hardware requirements for both new and existing equipment) shall be approved prior to operation. The deviation/waiver documentation shall include any alternate or special criteria or procedures that will be imposed to ensure safe design and operations for those devices that do not meet the applicable requirements. The variance process is as follows.

1. The safety variance request package shall be reviewed and the risk accepted by the initiating Division Office.
2. The Initiating Division Office forwards the request package to the LDEM for review and concurrence.
3. The LDEM will submit the safety variance request package to the GRC SHeD Chief.
4. The GRC SHeD Chief will forward the safety variance request for risk acceptance and approval by the Safety & Mission Assurance Director, Facility Director, and by the Center Director.
5. The variance will be forwarded to NASA Headquarters (if required) within 14 days.

6.2 Verification of compliance with these requirements is done by SHeD during periodic evaluation and assessments.

6.3 Inspections

(29 CFR 1910.179 Occupational Safety and Health Administration, Overhead and Gantry Cranes, 29 CFR 1910.184 Occupational Safety and Health Administration, Slings, 29 USC 654 (a)…General Duty Clause, NASA–STD–8719.9 NASA Standard, Lifting Devices and Equipment).

The logistics contractor is responsible for performing preventative maintenance and inspections on drive components of mobile cranes aerial lift platforms and forklifts. The contractor will submit notices to the equipment POC notifying them the equipment is due for inspection and maintenance. The equipment POC is responsible for bringing the equipment to the maintenance shop so this activity can be performed. The contractor maintains a database of inspection and maintenance items and findings for each piece of equipment.

The maintenance contractor is responsible for performing proof load tests, periodic load tests, and operational tests as well as frequent and period inspections. The contractor is responsible for maintaining a database of equipment, its

location and POC, as well as maintenance records and certifications. The contractor shall ensure that all equipment has the proper tagging and labeling during the load tests and inspections; however it is the end user who is responsible for ensuring these marking remain with the equipment between load tests and inspections.

6.3 Verification of compliance with these requirements is done by SHeD during periodic evaluation and assessments.

6.4 Purchasing

(29 CFR 1910.179 Occupational Safety and Health Administration, Overhead and Gantry Cranes, 29 CFR 1910.184 Occupational Safety and Health Administration, Slings, 29 USC 654 (a)…General Duty Clause, NASA–STD–8719.9 NASA Standard, Lifting Devices and Equipment).

All purchase requests for lifting devices shall be routed for approval through the LDEM. Identification and specification requirements will be assigned. Upon receipt, the lifting device(s) will be inspected by a certified inspector for conformance to those requirements.

All purchase requests for rigging hardware and associated equipment shall be routed for approval through the LDEM. Identification and specification requirements will be assigned. Upon receipt, the lifting device(s) will be inspected by a certified inspector for conformance to those requirements. The logistics and maintenance contractors will maintain a database of rigging, hardware, and equipment that must be inspected and maintained. The database will contain inspection, maintenance, and load test information on each piece of equipment.

6.4 Verification of compliance with these requirements is done by SHeD during periodic evaluation and assessments.

6.5 Training and Licensing

(29 CFR 1910.179 Occupational Safety and Health Administration, Overhead and Gantry Cranes, 29 CFR 1910.184 Occupational Safety and Health Administration, Slings, 29 USC 654 (a)…General Duty Clause, NASA–STD–8719.9 NASA Standard, Lifting Devices and Equipment).

A training, examination, and certification program shall be established or made available by the Facilities Division and Human Capital Development Branch. This may include contracting with a recognized certification organization that normally performs this function to provide the training.

The operator certification program will be reviewed at least annually by the LDEM to assure that the contents, training material, testing, and examination elements are up-to-date with current methods and techniques, and that any “lessons learned” are adequately addressed. The training will address the specific properties, hazards and operations of the type of lifting equipment to be used.

Each type of lifting device has its own training and certification requirements. Training content will meet the requirements of OSHA and NASA Standards.

6.5 Verification of compliance with these requirements is done by SHeD during periodic evaluation and assessments.

6.6 Medical Surveillance

(USC 654 (a)…General Duty Clause, NASA–STD–8719.9 NASA Standard, Lifting Devices and Equipment).

The onsite medical services contract will perform physical exams as required by NASA STD **8719.9** and NASA Procedural Requirement (NPR) 1800.1 for LDE operators. Medical Services shall contact employees via letter notifying them they are due for their annual physical. It is the employee's responsibility to schedule and attend the physical. It is the responsibility of the employee's supervisor to ensure their employees attend and receive their physical. Medical Services will notify the employee and their supervisor in writing of their medical clearance status (by using the NASA **C–142** form). Supervisors are required to maintain this information in the employee's personnel records. Employees who are not current with the medical requirements cannot operate lifting devices. Off site medical facilities may also perform testing but the requirements of **8719.9** and 1800.1 must be met. The exam requirements are as follows:

- Frequency
    - Partial annual exam and physical
    - Complete baseline and biennial examination and physical
- Partial Annual Exam Elements
    - Audiogram (no hearing loss in better ear greater than 40 dB at 500, 1000, 2000, 3000, and 4000 Hz with or without a hearing aid)
    - Visual acuity (minimum of at least 20/30 Snellen in one eye and 20/40 Snellen in the other eye with or without corrective lenses)
    - Depth perception
    - Field of vision at least 70 degrees in the horizontal median in each eye
    - Color vision
    - Urinalysis
- Complete Baseline and Biennial Exam Elements
    - Annual exam elements plus:
        - ECG
        - Blood Chemistry
            - Chem 23
            - Lipid Panel
            - CBC and Diff
- Physical Exam Elements
    - History to ascertain any condition that may cause any sudden incapacitation or inability to perform duties
    - Evaluation for reaction time, manual dexterity, and coordination
    - No tendencies to seizures, dizziness, claustrophobia, sudden incapacitation, loss of physical control, or similar undesirable conditions such as insulin controlled diabetes
    - No evidence of physical defects, or emotional instability, that in the opinion of the examiner, would present a hazard to self or others
- Written opinion
    - Job certification with any limitations or referral for further testing

6.6 Verification of compliance with these requirements is done by SHeD during periodic evaluation and assessments.

6.7 Overhead Crane Requirements

(29 CFR 1910.179 Occupational Safety and Health Administration, Overhead and Gantry Cranes, 29 USC 654 (a)…General Duty Clause, NASA–STD–8719.9 NASA Standard, Lifting Devices and Equipment).

6.7.1 Hardware Requirements for Overhead Cranes used for Critical Lifts

- **Testing**.—Overhead cranes must receive an annual periodic load test and an operational test the day of the lift. Rigging used for the lift must also receive an annual load test.
- **Marking**.—Cranes that have the specified design features, maintenance/inspection, and test intervals to lift critical loads shall be marked conspicuously so that the operator and assurance personnel can distinguish that the crane is qualified for critical lifts.
- **Speed reduction**.—For critical lift application, speed reduction from the motor to the drum on the hoist should be achieved by enclosure in a gear case. If open gears are required, they shall be guarded with a provision for lubrication and inspection. The maintenance contractor is responsible for ensuring the gears are lubricated and inspected.
- **Holding brakes**.—Two holding brakes shall be provided, each capable of bringing a rated load to zero speed and holding it. Holding brakes shall be applied automatically when power to the brake is removed. If the control brake and holding brake are designed to operate as a system and cannot independently stop and hold a rated load, then another means of braking is required for cranes used for critical lifts (e.g., emergency brake). The brakes shall be designed so that they can be tested as required in paragraph 4.3.3.d of **8719.9**. The brake design shall provide for emergency load lowering.
- **Remote emergency stop**.—For cranes used for critical lifts, an assessment shall be performed to determine the operational needs for remote emergency stops independent from the operator controlled emergency stop. Not all critical lift cranes or critical lifts require a remote emergency stop.

  Remote emergency stops are required for cranes used for critical lifts where the crane operator's view is restricted or obstructed. When provided, this independent remote emergency stop should be located such that the independent remote emergency stop operator(s) can clearly see the critical lift area(s). The remote emergency stop circuit shall be separate from and take precedence over the operator control circuit. The control, when activated, shall cause all drives to stop and the brakes to set.

  Hand-held remote emergency stop pendants should be standardized and should include power and circuit continuity indication. For those cranes required to make critical lifts that have not been modified to provide a remote emergency stop, handling procedures shall be developed and implemented to minimize the risk.
- **Upper limit switches**.—Dual upper limit switches are required for cranes used in critical lifts. For electric cranes, the limit switches shall meet the following requirements:

  Initial upper limit switch electrical contacts shall be a set of normally closed contacts in the "raise" contactor circuit such that movement in the raise direction shall be precluded after the limit switch is encountered. Movement in the "lower" direction will not be inhibited.

  Final upper limit switch electrical contacts shall be a set of normally closed electrical contacts wired into the mainline circuit, hoist power circuit, main contactor control circuit, or hoist power contactor control circuit such that all crane motion or all hoist motion shall be precluded after the limit switch is encountered. These normally closed contacts may be located in the low-voltage control circuitry.

  After a final upper limit switch has been activated, movement of the load will require action (resetting) at the final upper limit switch level.

The initial upper limit switch shall be adjusted sufficiently low to preclude inadvertent actuation of the final upper limit switch if the hoist actuates the initial upper limit switch at full speed with no load. Similarly, the final upper limit switch shall be adjusted sufficiently low to ensure that the hoist will not two-block (or otherwise damage wire rope) if the hoist actuates the final upper limit switch at full speed with no load. Both limits shall be tested from slow speed to full speed to verify correct operation. It should be noted that this requirement effectively lowers the usable hook height of the hoist. The limit switch arrangement shall be considered during new equipment design.

- **Lower limit switches**.—Lower limit switches to prevent reverse winding of the wire rope shall be provided.

6.7.2 Marking Requirements for Overhead Cranes

The rated load of all cranes shall be plainly marked on each side of the crane. If the crane has more than one hoisting unit, each hoist load block shall be marked with its rated load. This marking shall be clearly legible from the ground floor (OSHA requirement for all overhead cranes).

Following the periodic load test, cranes (overhead and mobile) hoists, winches, Hydra-sets and load-measuring devices shall be given a permanently affixed tag, posted on the crane or an appropriate location. The tag should contain the following information:

- equipment identification
- rated capacity (in pounds)
- date of the last periodic load test
- next required periodic load test date or load test expiration date

6.7.3 Load Test and Inspection Requirements for Overhead Cranes

Three types of load tests are required for overhead cranes.

- **Proof load tests**.—Before first use and after installation, all new, extensively repaired, extensively modified, or altered cranes shall undergo a proof load test with a dummy load as close as possible to, but not exceeding 1.25 times the rated capacity of the crane.
- **Periodic load tests**.—Each crane shall be tested at least once every 4 years with a dummy load equal to the crane's rated capacity. Cranes used for critical lifts shall be load tested at least once per year.
- **Operational tests**.—Performed in conjunction with proof load and periodic load tests, the operational test typically moves the load through a full range of movement to determine if the equipment (limit switches, emergency stop controls, brakes, etc.) is functioning properly.

The proof load tests and operational tests shall be performed prior to first use for new cranes and for existing cranes that have had modifications or alterations performed to components in the load path. Repairs or alterations to non-lifting, secondary lifting, or holding components such as suspension assemblies, electrical system, crane cab, etc., do not require a load test, although a functional check should be performed to determine if the repairs or alternations are acceptable.

All load and operational tests shall be performed by qualified personnel according to written (specific or general) technical operating procedures. An inspection of the crane and lifting components shall be performed after each load test and prior to the crane being released for service to ensure there is no damage. Surface or volumetric nondestructive testing (NDT) of critical components shall be used to validate the existence or absence of cracks or other load test effects indicated by this inspection. The periodic load test requirement may be fulfilled by a concurrently performed proof load test.

There are three types of inspections for cranes.

- **Daily inspections**.—These inspections shall be performed and documented using a NASA **C–144** form by the certified operator prior to first use each day the crane is used and kept on file in the area and shall include the following:
    - Check operating and control mechanisms for proper function.

- Without disassembling, visually inspect lines, tanks, valves, drain pumps, gear casings, and other components of fluid systems for deterioration and leaks. This applies to components that can be seen from the ground level for floor operated cranes and cab operated cranes or for which there is safe access via crane inspection walkways for cab operated cranes.
- Without disassembling, visually inspect all functional operating and control mechanisms, including brakes where visible, for excessive wear and contamination by excessive lubricants or foreign matter.
- Visually inspect hooks for cracks and deformities.
- Visually (without climbing up to bridge) inspect rope reeving for proper travel and drum lay, and inspect wire rope for obvious kinks, deformation, wire clips, and/or damage.
- Visually inspect hoist chains for excessive wear or distortion.

- **Monthly inspections (frequent inspections)**.—These are formal inspections performed by the maintenance contractor.
- **Annual inspections (periodic inspections)**.—These are formal inspections performed by the maintenance contractor.

  After each formal inspection, qualified authorized personnel shall prepare written, dated, and signed inspection reports. These reports shall include a reference to the inspection procedure and adequacy of the crane and crane components. Inadequacies shall be documented and, if determined to be a hazard, corrected prior to further use. These reports shall be filed and be made readily available by the organizational element responsible for crane inspection.

6.7.4 Training Requirements for Overhead Cranes, Mobile Cranes and Derricks, Hoists and Winches, Hydra-sets, and Forklifts

6.7.4.1 Noncritical Lifts

The certification program for noncritical lift operators shall include the following:

- Classroom training in safety, lifting equipment emergency procedures, general performance standards, requirements, pre-operational checks, and safety-related defects and symptoms (for initial certification and as needed) with a written examination
- Hands-on training (for initial certification and as needed)
- An annual refresher training with a proficiency examination for recertification
- Examination
- Medical examination (see Section **6.6**)
- Operator certification

The Facilities Division will issue operator certification. The LDEM has the authority to revoke certifications. Certifications can be revoked for negligence, violations of safety requirements, or failure to meet medical standards. Provisions shall be made for periodic checks of operators to verify they have certifications in their possession.

The certifications shall indicate the type of crane the holder is qualified to operate. Alternately, the organizational element may elect to maintain a master list of certified operators instead of issuing individual certifications, providing copies of the list are readily available to assurance and supervisory personnel at the worksite.

Renewal of all certifications shall require demonstration of proficiency or approval of supervision that proficiency is adequate and current. Certifications will expire at least every 4 years for all equipment except forklifts, which expire every 3 years.

6.7.4.2 Critical Lifts

Besides the training, examination, licensing, and renewal requirements for noncritical lifts, operators that are being certified to perform critical lifts must be trained in the specific hazards and special procedures associated with the

lift. Operators also must demonstrate proficiency and operating finesse with the crane using a test load as appropriate for the initial certification or alternately be directly supervised by a certified operator during the first initial lifting period. The employee's supervisor or facility manager may designate an employee as a critical lift operator. Certifications will indicate specific cranes for which the operator is certified.

6.7.5 Operating Requirements for Overhead Crane Operations

Cranes shall be operated according to this section, the manufacturers' recommendations, NASA STD **8719.9**, and The American Society of Mechanical Engineers (ASME) B30.2 standard. The following practices shall be followed for crane operations.

Operations shall be analyzed for hazards. The analysis shall consider the environment in which the operation occurs, hazards associated with crane maintenance, and, in general, a safety analysis of the equipment, facility, load, human factors, and interfaces as a whole in support of the lifting operation.

Methods and procedures shall be developed for lowering a load in the event of crane failure or other contingencies. These should be demonstrated and verified if practical.

A crane shall not be loaded beyond its rated load (capacity) except for required testing.

Cranes shall not be used to load test items such as slings, platforms, or lifting fixtures unless specifically identified to do so based on a specified percentage of rated load, and a safety analysis approved by the LDEM and the responsible safety, engineering, operations, and maintenance organizations. This is to ensure that the crane is not damaged due to sudden unloading should the test article fail.

Cranes shall not be used for side pulls unless specifically designed to do so.

Prior to an operation, the operator shall review any previously noted problems/discrepancies to determine possible impact on planned activity. Problems and discrepancies identified on the daily inspection should be called in for repair right away. If the crane is unsafe for use, it shall be locked and tagged out.

The operator shall ensure that the crane is within inspection and testing intervals prior to using it.

The operator shall establish safety zones before initiating operations. Safety zones shall have appropriate barriers (rope, cones, or other) established prior to lift.

The number of personnel within the safety zone should be limited to those supporting the lift (safety and quality engineers, lift engineer, lift monitor, crane operator, riggers and spotters) during crane movement. Personnel within the safety zone shall prevent placing themselves between a suspended load and an immobile object that could cause them to become trapped, crushed or pinched.

Before starting to hoist, the following conditions shall be noted:

- the hoist rope shall not be kinked
- multiple part ropes shall not be twisted around each other
- the hook shall be centered over the load in such a manner as to prevent swinging or side pulls

The operator shall know the weight of the working load. When raising loads that approach 75% of the rated capacity of the crane, the operator shall test the holding brakes. The brakes shall be tested by raising the load minimally above the surface and holding the load with the brake. The load should be held long enough to allow any dynamics to dampen out (approx. 5 min).

If radio communications are to be used, operators and/or lift supervisors shall test the communication system prior to each operation. Operations shall stop immediately upon communication loss and shall not continue until communication is restored.

If hand signals are required, only standard signals shall be used according to Appendix D for overhead cranes and Appendix E for mobile cranes. Hand signals shall be posted in a conspicuous location. Exception.—lift teams may come up with their own hand signals. The hand signals and their meanings must be recorded. The entire team must be trained and proficient in their meanings. The training must be recorded on a NASA **C–40**, On-the-Job Training form.

The lift team shall verify that the path of travel and placement of the load is free of obstructions and all tools and equipment for placement are readily available in the placement area.

Crane crew emergency egress routes should be verified to be free of obstructions prior to hazardous operations.

The availability of crane crew protective equipment shall be verified prior to hazardous operations. At a minimum, hard hats and safety shoes are required within the lift safety zone.

If there is a slack rope condition, it shall be determined that the rope is properly seated on the drum and in the sheaves before starting the hoist.

During hoisting, care shall be taken that there is no sudden acceleration or deceleration of the moving load and that the load does not contact any obstructions.

Loads shall be secured, balanced, and controlled with proper slings. The use of tag lines to keep the load stabilized shall be required whenever load swinging is anticipated to be a viable hazard. Tag line personnel shall take care not to impart undesirable motion to the load.

Taglines should not be wrapped around personnel's hands. Personnel could be dragged or injured if the load swung and the tagline was wrapped around their hands.

The load shall not be lowered below the point where less than two full wraps of rope remain on the hoist drum.

The lift monitor shall be in charge of the operation and shall instruct all personnel involved in the proper positioning, rigging, and moving to be done.

An operator shall be at the crane controls at all times while a load is suspended (OSHA requirement). Due to the length of some NASA operations, an operator change may be required while a load is suspended. This shall be accomplished via a procedure designed for the specific crane and operation, ensuring that the crane controls are manned at all times.

Crane crew discipline shall be maintained at all times during a crane operation. There shall be no eating, drinking, cell phone use or rowdiness during crane operation.

Outdoor hoisting operations shall not commence if winds are above 20 knots (23 mph, 37 km/hr) steady state or if gusts exceed 35 knots (40 mph, 65 km/hr). Consideration shall also be given to weather conditions such as lightning or snow before commencing operations.

6.7.6 Operating Requirements for Cab-Operated Cranes

Hands shall be free from encumbrances while personnel are using crane ladders. Articles that are too large to be carried in pockets or belts shall be lifted and lowered by handline.

Necessary clothing and personal belongings in crane cab shall be stored so as not to interfere with access or operations. Tools, oil can, waste, extra fuses, and other necessary articles shall be stored properly and shall not be permitted to lie loose in the cab or on the crane. Operators shall be familiar with the operation and care of the fire extinguisher provided.

A carbon dioxide, dry chemical, or equivalent fire extinguisher shall be kept in the cab or in the immediately available vicinity of the crane.

6.7 Verification of compliance with these requirements is done by SHeD during periodic evaluation and assessments.

6.8 Mobile Cranes and Derricks

(29 CFR 1926.550 Occupational Safety and Health Administration, Cranes and Derricks, 29 USC 654 (a)…General Duty Clause, NASA–STD–8719.9 NASA Standard, Lifting Devices and Equipment).

6.8.1 Critical Lift Hardware Requirements for Mobile Cranes and Derricks

Generally, high quality off-the-shelf, original equipment manufacturer (OEM) type equipment is acceptable for critical lifts if it is designed, maintained, and operated according to this standard.

- **Marking**.—Mobile cranes and derricks that have the specified design features, maintenance/inspection, and test intervals to lift critical loads shall be marked conspicuously so that the operator and assurance personnel can distinguish that the crane/derrick is qualified for critical lifts.
- **Testing**.—Mobile cranes must receive an annual periodic load test and an operational test the day of the lift. Rigging used for the lift must also receive an annual load test.
- **Holding brakes**.—For mobile cranes and derricks used for critical lifts, two holding brakes shall be provided, each capable of bringing a rated load to zero speed and holding it. The brakes shall be designed so that they can be tested as required in paragraph 5.3.3.f of NASA STD **8719.9**. This may be accomplished by the following means:
    - When brakes and clutches are used to control the motion of the hoist drum, two independent means of braking shall be provided: a service brake and an emergency brake. The service brake shall be capable of functioning with power, and the emergency brake shall set in the event of a power failure.
    - For load hoists equipped with a mechanically linked hydraulic motor/brake combination, the use of a counterbalance valve that locks the hydraulic fluid when the valve is in the neutral position is an acceptable braking means. If a free fall clutch is present in the hoist design between the hydraulic motor and planetary disc, then a second independent holding or control brake is required.
- **Operational tests**.—The operational test for a modified crane/derrick can be tailored to test only those portions of the equipment that were modified, only if the periodic load and operational test interval has not expired. After a boom change on a crane/derrick used for critical lifts, the operational test does not have to include verification of each brake if it has been less than a year since the brakes were tested with a load equal to or greater than the maximum capacity of the crane/derrick with the new boom.
- **Operation**.—For critical lifts, the load shall not exceed 75 percent of the crane's/derrick's rated capacity.

6.8.2 Marking Requirements for Mobile Cranes and Derricks

The minimum radius/maximum load capacity of the crane/derrick shall be clearly marked to be legible from the operator's or user's position. For cranes/derricks with separate lifting systems of different ratings, the markings will indicate the lifting capabilities of each system (e.g., main hook, whip hook, and auxiliary hook).

Appropriate load charts shall be located in the crane/derrick cab, if so equipped. Otherwise, the load charts shall be kept in a central, easily accessible place. Mobile cranes and derricks shall not be operated without an appropriate load chart.

6.8.3 Load Test and Inspection Requirements for Mobile Cranes and Derricks

There are three types of load tests are required for mobile cranes and derricks.

- **Proof load test**.—Before first use, all new, extensively repaired, extensively modified, or altered cranes and derricks shall undergo a proof load test. Mobile cranes and derricks shall be tested at the minimum practical working radius (and maximum working radius for new cranes and derricks only), without interfering with crane structure with a load as close as possible to, but not exceeding 1.10 times the rated load at the given radius. The load shall be lifted slowly and in an area where minimal damage will occur if the crane/derrick fails.
- **Periodic load test**.—Each mobile crane/derrick shall be tested at least once every 4 years with a dummy load equal to the rated capacity of the crane/derrick at the minimum practical working radius, without interfering with crane structure, according to the manufacturer's load chart. Cranes/derricks used for critical lifts shall be load tested at least once per year. A periodic load test shall be performed after each boom change (when boom disassembly/assembly is required) if the crane/derrick is to be used for critical lifts.

- **Operational test**.—Performed in conjunction with proof load and periodic load tests, the operational test typically moves the load through a full range of movement to determine if the equipment (limit switches, emergency stop controls, brakes, etc.) is functioning properly.

The proof load tests and operational tests shall be performed prior to first use for new, extensively repaired, or altered cranes and derricks. This applies only to those components directly involved with the lifting or holding capability of a crane/derrick that has been repaired or altered. Repairs or alterations to nonlifting, secondary lifting, or holding components such as suspension assemblies, electrical system, or crane cab do not require a load test, although a functional check should be performed to determine if the repairs or alterations are acceptable.

All load and operational tests shall be performed by qualified personnel according to written (specific or general) technical operating procedures. An inspection of the crane/derrick and lifting components shall be performed after each load test and prior to the crane/derrick being released for service to ensure there is no damage. Surface or volumetric NDT of critical components shall be used to validate the existence or absence of cracks or other load test effects indicated by this inspection. The periodic load test requirement may be fulfilled by a concurrently performed proof load test.

There are three types of inspections for mobile cranes and derricks.

- **Daily inspections**.—These inspections shall be performed and documented prior to first use each day the crane/derrick is used, and kept on file in the area and shall include the items listed in Section **6.7.3** for Overhead Crane Daily Inspections.
- **Monthly inspections (frequent inspections)**.—These are formal inspections performed by the maintenance contractor
- **Annual inspections (periodic inspections)**.—A formal annual inspection of the lifting components is performed by the maintenance contractor. A formal annual inspection of the mobile components is performed by the logistics contractor.

After each formal inspection, qualified, authorized personnel shall prepare written, dated, and signed inspection reports. These reports shall include a reference to the inspection procedure and adequacy of the crane/crane components. Inadequacies shall be documented and, if determined to be a hazard, corrected prior to further use. These reports shall be filed and made readily available by the organizational element responsible for inspection.

6.8.4 Training Requirements for Mobile Cranes and Derricks

See Section **6.7.4**, Training Requirements for Overhead Cranes, Mobile Cranes and Derricks, Hoists and Winches, Hydra-sets, and Forklifts.

6.8.5 Operating Requirements for Mobile Cranes and Derrick Operations

Cranes and derricks shall be operated according to this section, the manufacturers' recommendations, and ASME B30.5 (see Section **6.7.5**, Operating Requirements for Overhead Crane Operations). In addition to items listed in Section **6.7.5**, the following practices shall be followed for crane/derrick operations:

- Load charts shall be located in the crane/derrick cab, if so equipped. Otherwise, the load charts shall be kept in a central, easily accessible place. Mobile cranes and derricks shall not be operated without an appropriate load chart.
- Mobile cranes shall be level. When the load to be handled and the operating radius require the use of outriggers, or any time when outriggers are used, the outrigger beams shall be fully extended or deployed per load rating chart specifications.
- Outriggers shall be set to remove the machine weight from wheels if required by the OEM per load rating chart. Blocking under outrigger beams is not permitted. Blocking under outrigger floats, when used, shall be strong enough to prevent crushing, bending, or shear failure and of sufficient thickness, width, and length as to completely support the float, transmit the load to the supporting surface, and prevent shifting or toppling under load.
- On truck-mounted cranes, loads shall not be lifted over the front area except as approved by the crane manufacturer.

- Outriggers shall be used when the load to be handled at a particular radius exceeds rated load without outriggers, as specified by the crane manufacturer's load chart. Floats, where used, shall be securely attached to the outriggers.
- Neither the load nor the boom shall be lowered below the point where less than two full wraps of rope remain on the respective drums.
- For mobile cranes in transit, the following precautions shall be taken:
    - Boom shall be stowed/carried in line with direction of motion.
    - Superstructure shall be secured against rotation, except in negotiating turns when there is an operator in the cab or boom is supported on a dolly.
    - Hook shall be lashed or otherwise restrained so that it cannot swing freely while in transit or moving.
- When traveling a mobile crane with a load, a person shall be designated responsible for determining and controlling safety and making decisions as to position of load, boom location, ground support, travel route, and speed of movement.
- A mobile crane with or without a load shall not be traveled with the boom so high that it may bounce back over the cab.
- When rotating cranes/derricks, sudden starts and stops shall be avoided. Speed shall be such that the load does not swing out beyond radii at which it can be controlled. A tag line shall be used when rotation of load is hazardous.
- Ropes shall not be handled on a winch head without the knowledge of the operator.
- While a winch head is being used, the operator shall be within convenient reach of the power unit control lever.
- If the load must remain suspended for any considerable length of time, the operator shall hold the drum from rotating in the lowering direction by activating the positive control lever of the operator's station.
- Mobile cranes shall not be operated without the full amount of ballast or counterweight in place as specified by the manufacturer. The ballast or counterweight, as specified by the manufacturer, shall not be exceeded.
- Refueling with small portable containers shall be done with Underwriter's Laboratories or Factory Mutual Laboratories approved (or equivalent) safety type can equipped with an automatic closing cap and flame arrestor.
- Machines shall not be fueled with engines running.
- A carbon dioxide, dry chemical, or equivalent fire extinguisher shall be kept in the cab or vicinity of the crane/derrick.
- Except where the electrical distribution and transmission lines have been deenergized and visibly grounded at the point of work, or where insulating barriers, not a part of or an attachment to the crane, have been erected to prevent physical contact with power lines, mobile cranes shall be operated in accordance with the following:
    - For lines rated 50kV or below, minimum clearance between lines and any part of crane or load shall be 10 ft (3 m).
    - For lines rated over 50kV, minimum clearance between lines and any part of crane or load shall be 10 ft (3 m) plus 0.4 in. (10 mm) for each 1kV over 50kV, or twice the length of the line insulator, but never less than 10 ft (3 m).
- The crane shall be positioned to preclude the boom or load from contacting or falling across the power line(s) in the event of crane failure.

- In transit, with no load and boom lowered, the clearance between lines and any part of crane shall be a minimum of 4 ft (1.2 m), for lines rated 0.75kV or below. For lines rated over 0.75 kV, the clearance shall be 4 ft (1.2 m) plus 0.17 inch (4.3 mm) for each 1kV over 0.75 kV. Refer to ASME B30.5 for more details.
- Clearance observers shall be provided with an acceptable means of giving a warning in time for operators to react to insufficient clearance.
- Crane boom tips shall have two red flags, minimum of 12 in. (30.5 cm) by 12 in. (30.5 cm) each.
- Before starting operation near electrical lines, the organization responsible for the lines shall be notified and provided with all pertinent information. The responsible organization's cooperation shall be requested.
- Any overhead wire shall be considered an energized line unless and until the person responsible for such line or the electrical utility authorities indicates that it is not an energized line.
- Outdoor hoisting operations shall not commence if winds are above 20 knots (23 mph, 37 km/hr) steady state or if gusts exceed 35 knots (40 mph, 65 km/hr). Consideration shall also be given to weather conditions such as lightning, or snow before commencing operations.
- Cranes/derricks left outdoors shall be secured by the operator when operations are complete.

6.8 Verification of compliance with these requirements is done by SHeD during periodic evaluation and assessments.

6.9 Hoists and Winches

(29 CFR 1910.179 Occupational Safety and Health Administration, Overhead and Gantry Cranes, 29 USC 654 (a)…General Duty Clause, NASA–STD–8719.9 NASA Standard, Lifting Devices and Equipment).

6.9.1 Hardware Requirements for Manually Operated (non-powered) Hoists and Winches used in Critical Lifts

Manually operated hoist cranes that are off-the-shelf OEM-type are acceptable for critical lift applications. They shall comply with applicable ASME requirements. These hoists shall be equipped with at least one self-setting brake, referred to as a holding brake, applied directly to the motor shaft or some part of the gear train. No limit switches are required if proper over-travel restraint is provided.

6.9.2 Critical Lift Hardware Requirements for Powered Hoists and Winches used in Critical Lifts

Generally, off-the-shelf OEM-type equipment is acceptable for critical and noncritical lifts if it is designed, maintained, inspected, and operated according to this standard.

- **Marking**.—Hoists and winches that have the specified design features, maintenance/inspection, and test intervals to lift critical loads shall be marked conspicuously so that the operator and assurance personnel can distinguish that the hoist or winch is qualified for critical lifts.
- **Holding brakes**.—For powered (electric and air) hoists and winches used for critical lifts, two holding brakes shall be provided, each capable of bringing a rated load to zero speed and holding it. Holding brakes shall be applied automatically when power to the brake is removed. If the control brake and holding brake are designed to operate as a system and cannot independently stop and hold a rated load, then another means of braking is required (e.g., emergency brake). The brakes shall be designed so that they can be tested. The brake design shall provide for emergency load lowering.
- **Speed reduction**.—For critical lift applications, speed reduction from the motor to the drum on the hoist should be achieved by enclosure in a gear case. If open gears are required, they shall be guarded with a provision for lubrication and inspection.

- **Remote emergency stop**.—For powered hoists and winches used for critical lifts, an assessment shall be performed to determine the operational needs for remote emergency stops independent from the operator controlled emergency stop. Not all hoists and winches used for critical lifts require a remote emergency stop.

  Remote emergency stops are required for hoists and winches used for critical lifts where the operator's view is restricted/obstructed. When provided, this independent remote emergency stop should be located such that the independent remote emergency stop operator(s) can clearly see the critical lift area(s). The remote emergency stop circuit shall be separate from and take precedence over the operator control circuit. The control, when activated, shall cause all drives to stop and the brakes to set.

  Hand-held remote emergency stop pendants should be standardized and should include power and circuit continuity indication. For those hoists and winches required to make critical lifts that have not been modified to provide a remote emergency stop, handling procedures shall be developed and implemented to minimize the risk.

- **Upper limit switches**.—Dual upper limit switches are required for powered hoists and winches used in critical lifts.

  For electric hoists and winches, the limit switches shall meet the following requirements:

  - Initial upper limit switch electrical contacts shall be a set of normally closed contacts in the "raise" contactor circuit such that movement in the raise direction shall be precluded after the limit switch is encountered. Movement in the "lower" direction will not be inhibited.
  - Final upper limit switch electrical contacts shall be a set of normally closed electrical contacts wired into the mainline circuit, hoist or winch power circuit, main contactor control circuit, or hoist/winch power contactor control circuit such that all hoist or winch motion shall be precluded after the limit switch is encountered. These normally closed contacts may be located in the low voltage circuitry.
  - After a final upper limit switch has been activated, movement of the load will require action (resetting) at the final upper limit switch level. An inspection shall be made to determine the cause of failure of the initial upper limit switch. Stopping hoist motion by the above design configuration may result in a hazardous suspended load condition. The hoist design should include a means of detecting limit switch failure and allow for safe inspection and repair. For example, a system may be equipped with two different colored annunciator lights, one for each limit switch. A reset button may be included so that when a final upper limit switch is tripped, the load can be lowered immediately. The reset button should be secured to prevent unauthorized use.
  - The initial upper limit switch shall be adjusted sufficiently low to preclude inadvertent actuation of the final upper limit switch if the hoist actuates the initial switch at full speed with no load. Similarly, the final upper limit shall be adjusted sufficiently low to ensure that the hoist or winch will not two-block (or otherwise damage wire rope) if the hoist or winch actuates the final switch at full speed with no load. Both limits shall be tested from slow speed to full speed to verify correct operation. It should be noted that this requirement effectively lowers the usable hook height of the hoist. The limit switch arrangement needs to be considered during new equipment design.

- **Lower limit switches**.—For hoists and winches used for critical lifts, lower limit switches to prevent reverse winding of the wire rope shall be provided.

6.9.3 Marking Requirements for Hoists and Winches

See Section **6.7.2**, Marking Requirements for Overhead Cranes.

6.9.4 Load Test and Inspection Requirements for Hoists and Winches

Three types of load tests are required for winches and hoists.

- **Proof load test**.—Before first use and after installation, all new, extensively repaired, modified, or altered hoists and winches shall undergo a proof load test with a dummy load as close as possible to, but not exceeding 125 percent of the rated load

- **Periodic load test**.—All hoists and winches shall be tested at least once every 4 years with a dummy load equal to the hoist's/winch's rated capacity. Platform hoists shall be tested using the attached platform only. Hoists and winches used for critical lifts shall be load tested at least once per year.
- **Operational test**.—Performed in conjunction with proof load and periodic load tests, the operational test typically moves the load through a full range of movement to determine if the equipment (limit switches, emergency stop controls, brakes, etc.) is functioning properly.

The periodic load and operational tests shall be performed at least every 4 years. Hoists and winches used for critical lifts shall be load tested annually. If a hoist or winch is upgraded, a proof load test and an operational test shall be performed based on the upgraded rating.

All load and operational tests shall be performed by qualified personnel according to written (specific or general) technical operating procedures. An inspection shall be performed after each load test and prior to the hoist being released for service to ensure there is no damage. Surface or volumetric NDT shall be used to validate the existence or absence of cracks or other load test effects indicated by this inspection.

Three types of inspections for winches and hoists

- **Daily inspections**.—These inspections shall be performed and documented prior to first use each day the crane/derrick is used, and kept on file in the area and shall include the following items.
    - Check operating and control mechanisms for proper function.
    - Without disassembling, visually inspect all functional operating and control mechanisms, including brakes where visible, for excessive wear and contamination by excessive lubricants or foreign matter.
    - Inspect load chain for wear, twists, damage links, or foreign matter.
    - Visually inspect hooks for deformation, chemical damage, or cracks
    - Inspect load-bearing components for damage.
    - Inspect running rope or chain for discrepancies.
- **Monthly inspections (frequent inspections)**.—These are formal inspections performed by the maintenance contractor.
- **Annual inspections (periodic inspections)**.—A formal annual inspection of the lifting components is performed by the maintenance contractor.

After each formal inspection, qualified, authorized personnel shall prepare written, dated, and signed inspection reports. These reports shall include a reference to the inspection procedure and adequacy of the hoist/hoist components. Inadequacies shall be documented and, if determined to be a hazard, corrected prior to further use. These reports shall be filed and be made readily available by the organizational element responsible for hoist and winch inspection.

6.9.5 Training Requirements for Hoists and Winches

See Section **6.7.4**, Training Requirements for Overhead Cranes, Mobile Cranes and Derricks, Hoists and Winches, Hydra-sets and Forklifts

6.9.6 Operating Requirements for Hoist and Winch Operations

See Section **6.7.5**, Operating Requirements for Overhead Crane Operations.

6.9 Verification of compliance with these requirements is done by SHeD during periodic evaluation and assessments.

6.10 Hydra-sets and Load-Measuring Devices

(29 USC 654 (a)…General Duty Clause, NASA–STD–8719.9 NASA Standard, Lifting Devices and Equipment).

6.10.1 Hardware Requirements for Hydra-sets and Load-Measuring Devices used in Critical Lifts

Hydra-sets used for critical lifts shall have a 5 to 1 design factor based on ultimate strength for load bearing elements.

- **Marking**.—Hydra-sets and load-measuring devices that have the necessary design features, maintenance/inspection, and test intervals to lift critical loads will be marked conspicuously so that the operator and assurance personnel can distinguish that the Hydra-set and load-measuring device (unless permanent part of lifting device) are qualified for critical lifts.
- **Training**.—Implementation of a training and operator certification program that specifically addresses the unique properties of pneumatically controlled Hydra-sets and operational procedures needed to retain positive control of the same during critical lift operations.

6.10.2 Marking Requirements for Hydra-sets and Load-Measuring Devices

See Section **6.7.2**, Marking Requirements for Overhead Cranes

6.10.3 Load Test and Inspection Requirements for Hydra-sets and Load-Measuring Devices

Two types of load tests are required.

- **Proof load tests**.—Before first use, all new, extensively repaired, modified, or altered Hydra-sets shall undergo a proof load at 200 percent of rated load. Proof load tests shall be performed with piston rod fully extended to prevent instrument and seal damage.
- **Periodic load tests**.—All Hydra-sets shall be tested at 100 percent of rated load at least every 4 years. Load tests shall be performed with the piston rod fully extended to prevent instrument and seal damage. Calibration of load measuring devices satisfies the load test requirement.
- **Operational test**.—Performed in conjunction with proof load and periodic load tests. The operational test typically moves the load through a full range of movement to determine if the equipment (limit switches, emergency stop controls, brakes, etc.) is functioning properly.

Two types of inspections are required.

- **Daily inspections**.—These inspections shall be performed by the certified operator prior to first use each day the Hydra-set is used, and kept on file in the area and shall include the following:
    - Check operating and control mechanisms for proper function.
    - Without disassembling, visually inspect all functional operating and control mechanisms for excessive wear and contamination by excessive lubricants or foreign matter.
    - Visually inspect for corrosion, damage, cracks, and deformities.
    - Inspect hydraulic system for deterioration and leakage.
    - Check for loose hardware.
- **Periodic inspections**.—Periodic inspections are the same as daily inspections and shall be performed at least once per year or more frequently if required by the manufacturer. Periodic inspections consist of visual inspection by an appointed person and require dated documented records.

6.10.4 Training Requirements for Hydra-sets and Load-Measuring Devices

See Section **6.7.4**, Training Requirements for Overhead Cranes, Mobile Cranes and Derricks, Hoists and Winches, Hydra-sets and Forklifts.

6.10.5 Operating Requirements for Hydra-sets and Load-Measuring Device Operations

The following shall be followed for Hydra-set operations:

- When Hydra-set seals are replaced, an operational test and inspection shall be performed.
- Hydra-sets shall be stored in their appropriate handling containers when not in use.
- Hydra-sets and load measuring devices (unless permanent part of lifting device) shall be clearly and permanently marked with rated load value.
- Prior to use, the operator shall ensure the Hydra-set and load-measuring device (unless permanent part of lifting device) are within the inspection and periodic recertification intervals by examination of the load test tag(s), load test label(s), and/or documentation. The operator shall adhere to all tags on the controls.
- Hydraulically controlled Hydra-sets are preferred over pneumatically controlled Hydra-sets where close mating operations or accurate control of distances is required. Pneumatically controlled Hydra-sets shall not be used for these operations unless the following items are incorporated:
    - Installation of a fail-safe check valve in the Hydra-set. This is installed on the Hydra-set pneumatic feedline and "locks up" the Hydra-set in the event of a drop or loss of pneumatic control system pressure. A procedure shall be developed and implemented to ensure that the valve is set to an appropriate sensitivity. Normally, the valve is set at the midpoint of its range, which is satisfactory for most operations. However, depending on the specifics of the lift, it may be necessary to reset the valve using a dummy load as outlined in the manufacturer's recommended procedures.
    - Installation of a fast acting safety shutoff valve downstream of the load regulator that is used to provide positive control of the Hydra-set when no motion is desired.
    - Installation of electronic remote position indicators that warn operators of small movements of the hung load. However, these should only be installed if they will not adversely affect the operation or contamination control features of existing Hydra-sets.
    - Implementation of a training and operator certification program that specifically addresses the unique properties of pneumatically controlled Hydra-sets and operational procedures needed to retain positive control of the same during critical lift operations. This training must be reviewed by the LDEM.

6.10 Verification of compliance with these requirements is done by SHeD during periodic evaluation and assessments.

6.11 Sling and Rigging Requirements

(29 CFR 1910.184 Occupational Safety and Health Administration, Slings, 29 USC 654 (a)…General Duty Clause, NASA–STD–8719.9 NASA Standard, Lifting Devices and Equipment).

6.11.1 Hardware Requirements for Slings and Rigging Used in Critical Lifts

Generally, high-quality off-the-shelf OEM-type equipment is acceptable for critical and noncritical lifts if it is designed, maintained, and operated according to this standard.

Below-the-hook lifting devices used for critical lifts should receive an initial proof load test prior to use and an annual periodic load test. These items should be marked conspicuously so that the operator and assurance personnel can distinguish that the equipment is qualified for critical lifts.

Synthetic rope slings used in critical lifts are required to be de-rated by 50 percent of the manufacturer's rated load.

6.11.2 Marking Requirements for Slings and Rigging

Following the load test, all slings shall be given a permanently affixed tag. The tag should contain the following information:

- equipment identification (part number)
- the rated capacity based on the load test value
- the next periodic load test due date or load test expiration date

For alloy steel chains, size, grade, and reach shall be stated along with the rated load. For synthetic rope slings used for critical lifts, the marked rated load shall be 50 percent of the manufacturer's rated load.

6.11.3 Load Test and Inspection Requirements for Slings and Rigging

This section includes the following equipment:

- wire rope
- alloy steel chain
- metal mesh
- synthetic rope slings
- synthetic web slings
- linear fiber slings
- structural slings
- associated equipment such as spreader beams, shackles, turnbuckles, and eyebolts

The following proof load and periodic load tests apply to slings except as noted in paragraph 10.3.3. of NASA STD-**8719.9** (Non-load test slings).

- Turnbuckles shall be tested at the open position as a minimum. It is recommended that turnbuckles be tested at the open, closed, and midway positions. These tests shall be performed by qualified personnel according to written (specific or general) technical operating procedures.
- The use of synthetic rope slings is strongly discouraged; however, for synthetic rope slings, used in noncritical lifts, a 50 percent de-rating for use is recommended. For synthetic rope slings used in critical lifts, a 50 percent de-rating is required.
- When slings are composed of major components that fall into more than one of the categories listed in Table 10–2 of NASA STD **8719.9**, the components shall be tested individually according to applicable requirements and then as a system to the lowest test value (if practical).
- An inspection shall be performed after each load test and prior to release for service to ensure there is no damage. A periodic load test requirement can be fulfilled by a concurrent proof load test. The load shall be held for a minimum of 3 min. for load tests.
- **Proof load test**.—Before first use, all new, extensively modified, repaired, or altered slings and rigging shall undergo a proof load test at two times the rated load (except for structural slings may be tested at 125 percent of the rated capacity if specified by design, due to material characteristics, geometry, design factors, etc.) Proof load tests performed by the manufacturer prior to delivery are acceptable, if the necessary load test papers are provided to verify the extent and thoroughness of the test on the specific item.

  A proof load test also may be performed at a prescribed time when there is a question in design or previous testing. All components shall be tested together as a system, if practical.

  Prior to first use, all lifting interfaces such as eyebolts, D-rings, and lifting lugs permanently attached to the load shall be proof load tested if feasible. If hardware cannot be proof tested, design and analysis documentation should accompany the hardware.

  The proof load test can be waived if there is a possibility of overloading structural members not required during lifting (or other considerations) and it is deemed unfeasible by the responsible design organization, the waiver is accepted by the user organization, and a design analysis and inspection is be used to verify the integrity of the interface.

- **Periodic load test**.—Slings shall undergo periodic load tests at least every 4 years at the design-rated load as given. All components shall be tested together as a system, if practical.

  Slings used for critical lifts shall be load tested at least once per year.

  Lifting interfaces such as eyebolts, D-rings, and lifting lugs permanently attached to the load are exempt from periodic load testing.

6.11.3.1 Test Documentation

Written, dated, and signed reports shall be prepared after each test. Inadequacies shall be documented and, if determined to be a hazard the equipment should be tagged out and/or removed and corrected prior to further use. These reports shall be kept on file by the owner organization for a minimum of two test cycles and shall be made readily available.

Following the load test, all slings shall be given a permanently affixed tag identifying the equipment (part number) and stating the rated capacity based on the load test value and the next periodic load test due date or load test expiration date.

For alloy steel chains, size, grade, and reach shall be stated along with the rated load.

The use of synthetic rope slings is discouraged; however, for synthetic rope slings used for critical lifts, the marked rated load shall be 50 percent of the manufacturer's rated load.

The type of material shall also be stated. All load bearing components shall be traceable to the most recent load test. This may be accomplished by clearly marking/coding or tethering all components of the assembly, through configuration control, or other procedures.

NOTE: *Load bearing components not traceable to load test will invalidate the load test of the whole assembly.*

6.11.3.2 Inspections

- **Daily inspections**.—These inspections shall be performed prior to first use each day the sling is used and shall include the following:
  - Check for defects such as cracks, deformations, gouges, galling, kinks, crushed areas, and corrosion.
  - Check for proper configuration (the lifting assembly and associated hardware, as proof load tested).
- **Periodic inspections**.—Periodic inspections shall be performed at least once a year by the maintenance contractor who will determine the need to replace or repair slings. This inspection will be performed by a certified or otherwise qualified person. Any discrepancy (deterioration or damage) is sufficient reason for questioning continued use of the sling. Nonrepairable slings will be destroyed as soon as possible to avoid unintentional use. Written, dated, and signed inspection reports shall be prepared after each periodic inspection. Inadequacies shall be documented and, if determined to be a hazard, corrected prior to further use. These reports shall be filed and made readily available by the maintenance contractor.

6.11.4 Training Requirements for Riggers

The certification program for rigging operations shall include the following and may be included in the operator training for the individual lifting device training and certification.

If the general rigging is included in the specific lifting device certification and training program, sufficient rigging details shall be included in the training, testing and hands-on examination portion of that lifting device training program to assure that each individual understands and demonstrates proficiency in the required rigging techniques and methods. The following shall be addressed in the qualification of individuals for "rigging certification."

- Training
  - Classroom training in rigging safety, techniques, and methods, pre-use inspection, slings, and attachment devices (for initial certification and as needed).

  - Hands-on training (for initial certification and as needed).
  - An annual review by supervision or other designated personnel of each individual's performance as a rigger or operator/rigger to assure adequate proficiency in performing the necessary rigging tasks in a manner consistent with the principals, methods, and techniques associated with safe rigging practices.

- Examination

  Physical examination (criteria to be determined by the cognizant medical official based upon the related requirements associated with performing rigging tasks).

- Written examination

  Operational (practical) demonstration test (for initial certification only or to address new techniques or methods as required). Each individual shall demonstrate the ability to adequate determine and/or apply load weight, center of gravity and apply special articulating devices essential to the safe and successful lift operation. Riggers must demonstrate the ability to apply proper rigging principals, methods, and techniques using simulated loads of various weights, sizes, and configurations.

Certifications will expire at least every 4 years. Renewal procedures and requirements will be established by the organizational element responsible for issuing rigger certifications.

6.11.5 Operating Requirements for Rigging Operations

Slings shall be operated according to this section, the manufacturers' recommendations, and ASME B30.9. The following practices shall be followed for sling operations:

- Select a sling of suitable rated capacity, use proper hitch, and attach the sling securely to the load. For critical lifts, rope slings of synthetic construction shall not be used beyond 50 percent of their rated load.
- Avoid kinks, loops, or twists in the sling legs.
- Start lift slowly to avoid shock loading the slings.
- Do not pull a sling from under a load when the load is resting on the sling. Block the load up to remove the sling.
- Slings shall be shortened only by methods approved by the sling manufacturer or a qualified person.
- Eyes in wire rope bridles, slings, or bull wires shall not be formed by wire rope clips or knots.

The following materials and techniques shall not be used in slings or rigging hardware to hoist personnel or loads: natural rope, wire rope clips, the fold-back metal pressed sleeve or clip technique.

- Ensure metallic slings are lubricated and/or painted with an approved product to prevent corrosion. Contact the maintenance contractor if metallic slings are in need of a protective coating.
- Slings shall not be loaded beyond rated load except for required testing.
- Particular attention shall be given to preventing corrosion. Slings shall be stored such that they will not be damaged by moisture, heat, sunlight, or chemicals. Nylon shall not be used in an acid or phenolic environment. Polyester, polypropylene, and aluminum shall not be used in a caustic environment.
- Precautions shall be taken to ensure proper sling assembly and that the proper configuration is maintained. Slings shall be used according to design and/or manufacturers' instructions.
- The user shall ensure that the sling is within the inspection and periodic recertification intervals and that all load bearing components are traceable to the most recent load test by examination of the tags and/or documentation.
- Slings shall be padded or protected from the sharp edges of their loads.
- For lifting, safety hoist rings are strongly recommended for use instead of eye bolts. When eyebolts are used for lifts, only shouldered eyebolts may be used.

Appendix F contains additional rigging information.

6.11 Verification of compliance with these requirements is done by SHeD during periodic evaluation and assessments.

6.12 Aerial Lifting Devices

(29 CFR 1910.178 Occupational Safety and Health Administration, Powered Industrial Trucks, 29 USC 654 (a)…General Duty Clause, NASA–STD–8719.9 NASA Standard, Lifting Devices and Equipment).

6.12.1 Marking Requirements for Aerial Lifting Devices

Following the periodic load test, mobile aerial platforms shall be given a permanently affixed tag identifying the equipment and stating the next required periodic load test date or load test expiration date.

6.12.2 Load Test and Inspection Requirements for Mobile Aerial Platforms

Three types of tests are required for mobile aerial platforms.

- **Proof load tests**.—Before first use, all new, extensively repaired, or altered mobile aerial platforms shall undergo a proof load test in accordance with the manufacturers' instructions and the applicable American National Standards Institute/Scaffold Industry Association (ANSI/SIA) standard. A proof load test may also be performed when there is a question in design, previous testing, or to ensure system integrity. The load shall be lifted slowly in an area where minimal damage will occur if the platform fails
- **Periodic load tests**.—Each mobile aerial platform shall be tested at least once every year with a load equal to the rated load.
- **Operational tests**.—Performed in conjunction with proof load and periodic load tests, the following shall be performed with a dummy rated load unless otherwise specified:
    - Perform all functions in an unloaded condition, including operation of limit switches and tilt alarm/shutoff. Where possible, use ground control station. When required to use the platform control station, operate close to ground level.
    - Perform load test at maximum boom radius over the rear**,** if applicable. Hold the load for a minimum of 5 min and verify drift does not exceed that specified by the responsible engineering organization.
    - The operational test for a modified mobile aerial platform can be tailored to test only those portions of the equipment that were modified/repaired, only if the rated and operational test interval has not expired.

Proof load tests and operational tests shall be performed prior to first use for new or extensively repaired or altered components directly in the mobile aerial platform load path. Repairs or alterations to nonlifting or nonholding components do not require a load test, although a functional check should be performed to determine if the repairs or alterations are acceptable.

The periodic load and operational tests shall be performed annually. All load and operational tests shall be performed by qualified personnel according to written (specific or general) technical operating procedures. An inspection of the mobile aerial platform and its components shall be performed after each load test and prior to the platform being released for service to ensure there is no damage. The periodic load test requirement may be fulfilled by a concurrently performed proof load test.

There are two types of inspections for mobile aerial platforms.

- **Daily inspections**.—These inspections shall be performed and documented using a NASA C-61 form by the certified operator prior to first use each day the mobile aerial platform is used and kept on file in the area and shall include the following:
    - Check safety devices for malfunction.
    - Check operating and control mechanisms for proper function.
    - Inspect for defects such as cracked welds, damaged control cables, and loose cable/wire connections.
    - Inspect hydraulic or pneumatic systems for observable deterioration or leakage and check hydraulic system for proper oil level if suspect.
    - Inspect electrical equipment for signs of malfunction, signs of deterioration, and dust and moisture accumulation.
    - Inspect chains or wire rope for wear or distortion.
- **Periodic inspections**.—These inspections shall be performed by the maintenance contractor at least once per year or more frequently if required by the manufacturer or the applicable ANSI/SIA standard.

6.12.3 Training Requirements for Mobile Aerial Platforms

- Classroom training in safety, lifting equipment emergency procedures, general performance standards, requirements, preoperational checks, and safety-related defects and symptoms (for initial certification and as needed)
- Hands-on training (for initial certification and as needed)
- An annual refresher training
- Training for working at heights and the proper use of fall protection equipment
- Examination
- Physical examination
- Written/oral examination
- Operational demonstration
- Proficiency examination for recertification

Certifications will expire at least every 4 years. Renewal shall require demonstration of proficiency or approval of supervision that proficiency is adequate and current.

6.12.4 Operating Requirements for Mobile Aerial Platform Operations

Mobile aerial platforms shall be operated according to this section, the manufacturers' recommendations, and the applicable ANSI/SIA standard. The following practices shall be followed for mobile aerial platform operations:

- Determine that the proposed mobile aerial platform operation is the desired operation after comparing hazards, productivity, and manpower requirements associated with other methods of access.
- Before each use, the operator shall have read and understood the manufacturer's operating instructions and safety rules, have been trained and certified, and have read and understood all decals and warnings on the equipment.
- Before each use, the operator shall perform a preoperational check to demonstrate operational readiness, including all limit switches and outrigger drift switches, if applicable, but excluding the tilt alarm/shutoff. If controls do not operate properly, the operator is responsible for notifying the supervisor. Repairs and adjustments shall be made before operations begin. The operator shall adhere to all tags on the controls.
- Before each use, the operator shall survey the area for applicable hazards such as overhead obstructions and high-voltage conductors, debris, bumps and loose obstructions, dropoffs and holes, ditches, untamped earth

fills, obstructed path of travel, unstable footing, and other possible hazardous conditions. The operator shall establish appropriate safety zones before initiating operations.

- The equipment shall not be loaded beyond its rated load (capacity) except for required testing.
- The operator shall ensure the equipment is within inspection and testing intervals by examination of the periodic recertification tags and/or documentation.
- Operator discipline shall be maintained at all times. There shall be no eating, drinking, cell phone use or rowdiness during mobile aerial platform operations. Personnel shall keep all parts of the body, tools, and equipment inside the work platform periphery during raising, lowering, and traveling operations.
- Fall protection is required for personnel using mobile aerial platforms that can tilt, as covered by ANSI/SIA A92.2 and A92.5.
- Tools and other objects shall be carried in canvas bags or by other methods that free both hands and do not present a snagging hazard. Alternate methods of tool delivery beside mobile aerial platforms should be investigated.
- Unless stated otherwise in the manufacturer's operating instruction, the bucket should be returned to the lowest position when not in use.
- For work on or near electrical distribution and transmission lines, mobile aerial platforms shall be operated in accordance with Section **6.8.5**, Operating Requirements for Mobile Cranes and Derrick Operations.
- Insulated mobile aerial platforms shall be tested and inspected in accordance with ANSI/SIA.
- Outdoor mobile aerial platform operations shall not commence if winds are above 20 knots steady state (23 mph, 37 km/hr) or if gusts exceed 25 knots (29 mph, 46 km/hr) or as recommended by the manufacturer. Consideration shall also be given to weather conditions such as lightning or snow before commencing operations.
- The requirements of this section apply to all uses of mobile aerial platforms (e.g., movement for storage/repositioning and use of the platform close to ground level).

6.12 Verification of compliance with these requirements is done by SHeD during periodic evaluation and assessments.

6.13 Powered Industrial Trucks (Forklifts)

(29 CFR 1910.178 Occupational Safety and Health Administration, Powered Industrial Trucks, 29 USC 654 (a)…General Duty Clause, NASA–STD–8719.9 NASA Standard, Lifting Devices and Equipment).

6.13.1 Critical Lift Hardware Requirements for Powered Industrial Trucks

High quality off-the-shelf OEM-type equipment is acceptable for critical and noncritical lifts if it is designed, maintained, and operated according to this standard.

6.13.2 Marking Requirements for Powered Industrial Trucks

The rated load/applicable capacity ratings shall be clearly marked on the powered industrial truck.

Following the periodic load test, powered industrial trucks shall be given a permanently affixed tag identifying the equipment and stating the next required periodic load test date or load test expiration date.

6.13.3 Load Test and Inspection Requirements for Powered Industrial Trucks

Three types of load tests are required for powered industrial trucks.

- **Proof load test**.—Proof load tests and operational tests shall be performed prior to first use for new or extensively repaired or altered components directly in the powered industrial truck load path in accordance

with the manufacturers' instructions and the applicable ASME standard. Repairs or alterations to nonlifting or nonholding components do not require a load test, although a functional check should be performed to determine if the repairs or alterations are acceptable. A proof load test may also be performed when there is a question in design, previous testing, or to ensure system integrity.

- **Periodic load test**.—For powered industrial trucks used where failure/loss of control could result in loss of or damage to flight hardware, a periodic load and operational test shall be performed at least once every year with a load equal to the rated load.
- **Operational test**.—Performed in conjunction with proof load and periodic load tests, the following shall be performed with a dummy-rated load unless otherwise specified:
    - Perform all functions in a loaded condition including tilt operation. Ensure the load is secured and will not move during tilting operations.
    - Hold the load for a minimum of 5 min and verify drift does not exceed that specified by the responsible engineering organization.
    - The operational test for a modified powered industrial truck can be tailored to test only those portions of the equipment that were modified/repaired only if the rated and operational test interval has not expired.

Two types of inspections are required for forklifts.

- **Daily inspections**.—These inspections shall be performed by the operator prior to each shift the truck is used and kept on file in the area. The operator shall inspect:
    - Warning and safety devices for malfunction (to include the horn)
    - Condition of tires (if pneumatic tires, check inflation pressures)
    - Lights
    - Hydraulic system for observable deterioration or leakage and check for proper oil level if suspect
    - Electrical equipment for signs of malfunction, signs of deterioration, and dust and moisture accumulation
    - Chains and cables for wear or distortion
    - Battery, connections, and load test
    - Control mechanisms
    - Lift and tilt systems
    - Load engaging means
    - Brakes
    - Steering mechanism
    - Fuel systems
    - Engine oil and pressure
    - Manufacturing plates, tags, or decals to confirm legible condition
- **Periodic inspections**.—The following inspections shall be performed at least once per year or more frequently as required by the manufacturer, ASME B56.1, users' experience gained, severity of service, environment, and criticality: a formal inspection of the lifting components is performed by the maintenance contractor; a formal annual inspection of the mobile components is performed by the logistics contractor.

6.13.4 Training Requirements for Powered Industrial Trucks

See Section **6.7.4** of this chapter.

6.13.5 Operating Requirements for Powered Industrial Trucks

6.13.5.1 General Operating Requirements

Powered industrial trucks shall be operated according to this section, the manufacturers' recommendations, and ANSI/ITSDF B56.1. The following practices shall be followed for powered industrial truck operations:

- General operating procedures describing powered industrial truck operations, emergency steps, communication requirements, and special requirements including checklists and inspection requirements shall be prepared, approved and followed for each area powered industrial truck operations are performed and shall include each type of truck. There must be a formal system for review, approval, and update to maintain valid operating procedures.
- Before each use, the operator shall survey the area for applicable hazards such as overhead obstructions, debris, bumps and loose obstructions, dropoffs and holes, ditches, obstructed path of travel, unstable ground, and other possible hazardous conditions. The operator shall establish appropriate safety zones before initiating operations.
- The equipment shall not be loaded beyond its rated load (capacity) except for required testing.
- The operator shall ensure the equipment is within inspection and testing intervals by examination of the periodic recertification tags and/or documentation. The operator shall adhere to all tags on the controls.
- Operator discipline shall be maintained at all times. There shall be no eating, drinking, cell phone use or rowdiness during powered industrial truck operations.
- Operators shall keep all parts of the body inside the operator compartment during operations.
- Never put any part of the body into the mast structure or between the mast and truck.
- Do not start or operate the truck or any of its attachments from any place other than from the operator's position.
- Trucks shall not be driven up to anyone standing in front of an object.
- Operators shall ensure other personnel are not in the swing radius prior to performing turning maneuvers.
- Operators shall sound the horn when approaching cross aisles, doorways and other locations where pedestrians may step into the path of truck travel.
- No person is allowed to stand or pass under the elevated portion of any truck, empty or loaded.
- Unauthorized personnel shall not be permitted to ride on powered industrial trucks. A safe place to ride shall be provided where riding of trucks is authorized.
- A powered industrial truck is attended when the operator is less than 25 ft (7.6 m) from the truck and it is in his view.
- A powered industrial truck is unattended when the operator is more than 25 ft (7.6 m) from the truck or the truck is not in the operator's view.

Before leaving the operator's position or dismounting from the truck, while still attending the truck, the operator shall:

- Bring the truck to a complete stop.
- Place the directional controls in neutral.
- Apply the parking brake.
- Fully lower the load engaging means.

In addition, when leaving the truck unattended:

- Stop the engine or turn off the controls.

- If the truck must be left on an incline, block the wheels.
- The operator shall maintain a safe distance from the edge of ramps, platforms, and other similar working surfaces.
- When powered industrial trucks are driven on and off highway trucks or trailers, the brakes on the highway trucks or trailers shall be applied and wheels chocked or other positive mechanical means shall be used to prevent unintentional truck or trailer movement. Fixed jacks should be placed under trailers not coupled to a tractor.
- Operators shall verify sufficient headroom under overhead installations, lights, wiring, pipes, sprinkler systems, or other hazards.
- An overhead guard shall be used to protect against falling objects.
- A load backrest shall be used whenever necessary to minimize the possibility of the load or part of it from falling rearward.
- Only approved industrial trucks shall be used in areas classified as hazardous locations.
- All accidents involving personnel, building structures, and equipment shall be reported to the supervisor.
- Industrial trucks shall not be parked where they block access to fire aisles, stairways, or fire equipment.
- Motorized hand trucks shall not be ridden unless they are of the hand/rider design.

Whenever a truck is used to lift personnel and there are no controls that are elevatable with the lifting carriage or forks:

- Use a securely attached man-rated platform.
- Make sure the lifting mechanism is operating smoothly and properly.
- Place the mast in a vertical position and never tilt forward or rearward when elevated.
- Place the truck controls in neutral and set the brake.
- Lift and lower smoothly and with caution.
- Watch for overhead obstructions.
- Keep hands and feet clear of controls other than those in use.
- Move the truck only for minor adjustments in positioning when personnel are on the platform and never more than creep speed.
- The operator is to remain in the control position on the truck.
- Restraining means such as rails or chains shall be in place and personnel on the platform shall wear a body harness and lanyard or retractable safety device.
- Personnel on the platform shall be certified in Fall Protection.
- While refueling, the engine shall be stopped and the operator shall not be on the truck.
- Spillage of oil or fuel shall be carefully and completely absorbed or evaporated and fuel tank cap replaced before restarting engine.
- Open flames shall not be used to check electrolyte levels in storage batteries, liquid level in fuel tanks, or the condition of liquefied petroleum gas (LPG) fuel lines and connectors.

6.13.5.2 Traveling in Powered Industrial Trucks

- Truck operators shall observe all traffic regulations including posted speed limits.
- Truck operators shall yield the right of way to pedestrians and emergency vehicles such as ambulances and fire trucks.

- Truck operators shall not pass another truck traveling in the same direction at intersections, blind spots, or other dangerous locations.
- Operators shall slow down and sound the horn, or audible warning device, at cross aisles and other locations where their view is obstructed.
- Truck operators shall keep a clear view of the path of travel and observe for other traffic, personnel, and safe clearances.
- If the load being carried obstructs forward travel, the operator will travel with the load trailing.
- Truck operators shall ascend and descend grades slowly, with caution and by the following operations:
- Loaded rider trucks shall be driven with the load upgrade when ascending or descending grades in excess of 5 percent.
- Unloaded trucks should be operated on all grades with the load engaging means downgrade.
- On all grades the loads and load engaging means shall be tilted back and raised only as far as necessary to clear the road surface.
- Travel straight up and down and avoid turning on grades.
- Trucks shall be operated at a speed that will permit it to be brought to a stop in a safe manner.
- The truck shall be operated with the load engaging means or load low and where possible, tilted back. The load should not be elevated except during stacking.
- Starts, stops, turns, or direction reversals shall be in a smooth manner so as not to shift the load or overturn the truck.
- Horseplay and stunt driving will not be allowed.
- Operators will slow down for wet and slippery surfaces.
- Before driving over a dockboard or bridge plate, operators shall be sure it is properly secure and its rated capacity is not exceeded and shall drive across carefully and slowly.
- Operators shall avoid running over loose objects on the roadway surface.
- Operators shall reduce speed to a safe level when negotiating turns and shall reduce speed to be consistent with the environment.
- Seat belts, when provided, shall be used.
- The operator should stay with the truck if tipover occurs or if the truck falls off a loading dock or ramp. The operator should hold on firmly and lean away from the point of impact.

6.13.5.3 Loading Powered Industrial Trucks

- Handle only stable and safely arranged loads.
- Handle only loads within the capacity of the truck.
- Handle loads only with the load engaging means and do not transport loads or miscellaneous items within the operator’s compartment or other areas of the truck.
- When attachments are used, extra care shall be taken in securing, manipulating, positioning, and transporting the load.
- Trucks equipped with attachments shall be operated as partially loaded trucks when not handling a load.
- Loads shall be completely engaged with the load engaging means. Forks should be at least 2/3 of the load length.

- Where tilt is provided, carefully tilt the load backward to stabilize. Caution should be used in tilting with high or segmented loads.
- Do not tilt forward with load engaging means elevated except to pick up or deposit a load over a rack or stack.
- When stacking or tiering, use only enough back tilt to stabilize the load.

6.13 Verification of compliance with these requirements is done by SHeD during periodic evaluation and assessments.

6.14 Jack Requirements

(29 CFR 1910.244 Hand and Portable Powered Tools and Other Hand-Held Equipment, 29 29 USC 654 (a)…General Duty Clause, NASA–STD–8719.9 NASA Standard, Lifting Devices and Equipment).

6.14.1 Critical Lift Hardware Requirements for Jacks

High-quality off-the-shelf OEM-type equipment is acceptable if it is designed, maintained, and operated according to the requirements in NASA STD **8719.9**.

6.14.2 Marking Requirements for Jacks

Jacks shall contain the following markings:

- The rated load/applicable capacity ratings shall be clearly and permanently marked on the jack.
- Mechanical jacks with two ratings (sustaining and lifting) shall be marked with each.
- Hydraulic pressure or lever arm length and force shall be legibly marked on the jack.
- Marking shall indicate the recommended hydraulic fluid to be used.
- Double acting hydraulic jacks shall be marked to indicate the need for a relief valve.
- Following the periodic load test, jacks shall be given a permanently affixed tag identifying the equipment and stating the next required periodic load test date or load test expiration date.

6.14.3 Load Test and Inspection Requirements for Jacks

Three types of load tests are required for jacks.

- **Proof load test**.—Before first use, all new, extensively repaired, or altered jacks shall undergo a proof load test at 120 percent of the rated load and operated to its full length of travel in accordance with the manufacturers' instructions and ASME B30.1.
- **Periodic load test**.—For jacks used where failure/loss of control could result in loss of or damage to flight hardware, a periodic load and operational test shall be performed at least once every year with a load equal to the rated load.
- **Operational test**.—Performed in conjunction with proof load and periodic load tests, the following shall be performed with a dummy-rated load unless otherwise specified:
    - Hydraulic jacks shall be operated to full length of travel. Hold the load for a minimum of 5 min and verify drift does not exceed that specified by the responsible engineering organization.
    - Mechanical jacks shall be operated to full length of travel. Hold the load for a minimum of 5 min and verify no drift.
    - The operational test for a modified jack can be tailored to test only those portions of the equipment that were modified/repaired, only if the rated and operational test interval has not expired.

Two types of inspections are required for jacks.

- **Daily inspections**.—These inspections shall be performed each day the jack is used by the user. Inspect for (without disassembly):
    - Operating lever and load-bearing surfaces free of slippery material or fluids
    - Improper engagement or extreme wear of pawl and rack
    - Chipped, cracked, or worn rack teeth
    - Defects such as cracked welds, damaged housing
    - Damaged, bent, or worn threads
    - Hydraulic systems for observable deterioration or leakage and check hydraulic system for proper oil level if suspect
    - Scored or damaged plunger
    - Improper function operation
    - Free movement of swivel, heads, and caps
    - Loose bolts or rivets
    - Damaged or improperly assembled accessory equipment
    - Rack wear or bending
    - Other items specified in manufacturers' recommendations

  If external conditions indicate possible internal difficulty, notify the supervisor. Repairs and adjustments shall be made before operations begin

- **Periodic inspections**.—Periodic inspections are the same as daily inspections. Periodic inspections shall be performed at least once per year or more frequently if required by the manufacturer or ASME B30.1.

  Periodic inspections consist of visual inspection by an appointed person and require dated documented records. If external conditions indicate possible internal difficulty, notify the supervisor. Repairs and adjustments shall be made before operations begin.

6.14.4 Training Requirements for Jacks

Only qualified and designated personnel shall be authorized to perform inspection and/or maintenance operations on jacks. Operators shall be instructed in the proper use of jacks.

6.14.5 Operating Requirements for Jack Operations

Jacks shall be operated according to this section, the manufacturers' recommendations, and ASME B30.1. The following practices shall be followed for jack operations:

- Before the jack is used each day (shift), the operator shall have read and understood the manufacturer's operating instructions and safety rules, and have read and understood all decals and warnings on the equipment.
- Before the jack is used each day (shift), the operator shall perform a preoperational check to demonstrate operational readiness, including all limit switches. If controls do not operate properly, the operator is responsible for tagging out the equipment and notifying the supervisor. Repairs and adjustments shall be made before operations begin.
- Before operating the jack, the operator shall survey the area for applicable hazards such as obstructions, debris, bumps, drop-offs and holes, obstructed path of travel, unstable footing, and other possible hazardous conditions. The operator shall establish appropriate safety zones, if required, before initiating operations.
- The equipment shall not be loaded beyond its rated load (capacity) except for required testing.
- The operator shall ensure the equipment is within inspection and testing intervals by examination of the periodic load test tags and/or documentation. The operator shall adhere to all tags on the controls.

- Verify that there is sufficient swing area for the operating lever.
- The jack shall be firmly supported at the base under load.
- The operating lever is the recommended lever and that it is properly seated in its socket.
- Operators shall not straddle the operating lever of a mechanical jack.
- Operating levers shall be removed when not in use to avoid accidental dislodging of the jack and reduce the tripping hazard.
- Measures shall be taken to prevent personnel from working or passing under the load until the load is secured by cribbing, blocking, or other means.
- Precautions shall be taken to ensure all personnel are clear of the load before lowering.
- Personnel shall be instructed in the signals and procedures for multiple jack use or special jack lift operations.
- Off-center loading of jacks shall be avoided.
- Extenders shall not be used unless authorized by a qualified person.
- If there is a possibility of slippage of the cap, a block shall be placed in between the cap and the load.

6.14 Verification of compliance with these requirements is done by SHeD during periodic evaluation and assessments

7.0 RECORDS

- Training.—Maintained by Lifting Device and Equipment Operator's/User's Supervisor.
- Crane and lifting equipment certifications.—Maintained by Facilities Division.
- Forklift certifications.—Maintained by Logistics and Technical Information Division.
- Medical.—Maintained by Lifting Device and Equipment Operator's/User's Supervisor.

8.0 REFERENCES

Document number	Document name
29 CFR **1910.178**	Occupational Safety and Health Administration, Powered Industrial Trucks
29 CFR **1910.179**	Occupational Safety and Health Administration, Overhead and Gantry Cranes
29 CFR **1910.180**	Occupational Safety and Health Administration, Crawler Locomotive and Truck Cranes
29 CFR **1910.184**	Occupational Safety and Health Administration, Slings
29 CFR **1910.244**	Hand and Portable Powered Tools and Other Hand-Held Equipment
29 CFR **1926.550**	Occupational Safety and Health Administration, Cranes and Derricks
ANSI/ASME B30.2–2005	Overhead and Gantry Cranes (Top Running Bridge, Single or Multiple Girder, Top Running Trolley Hoist)
ANSI/ITSDF B56.1–2009	Safety Standard for Low Lift and Height Lift Trucks
ASME 30.2	Overhead and Gantry Cranes (Top Running Bridge, Single or Multiple Girder, Top Running Trolley Hoist)
NASA–STD–**8719.9**	NASA Standard, Lifting Devices and Equipment.

APPENDIX A.—DEFINITIONS AND ACRONYMS

American National Standards Institute (ANSI)

The American Society of Mechanical Engineers (ASME)

Brake.—A device used for retarding or stopping motion.

Certification.—That situation when the lifting device or equipment maintenance, test, or other operational checks have been performed and are current.

Control braking means.—A method of controlling speed by removing energy from the moving body or by imparting energy in the opposite direction.

Crane.—A machine for lifting and lowering a load and moving it horizontally, with the hoisting mechanism an integral part of the machine.

Critical lift.—A lift where failure/loss of control could result in loss of life or loss of or damage to flight hardware or a lift involving special, high dollar items, such as spacecraft, one-of-a-kind articles, or major facility components, whose loss would have serious programmatic or institutional impact. A lift is also considered critical if the Hazard Analysis for the lift identifies a high probability of damage to the LDE that would result in significant repair costs and/or schedule delays.

Critical lifts also include

- lifting of personnel with a crane
- lifts where personnel are required to work under a suspended load
- operations with special personnel and equipment safety concerns beyond normal lifting hazards.
- lifting/lowering hazardous materials such as explosives

Critical weld.—A weld where the single failure of which could result in injury to personnel or damage to property or flight hardware by dropping or losing control of the load.

Derrick.—An apparatus with a mast or member held at the head by guys or braces, with or without a boom and that uses a hoisting mechanism and operating ropes for lifting or lowering a load.

Designated person.—Any person who has been selected or assigned (in writing) by the responsible NASA organizational element or the using contractor as being qualified to perform specific duties. A certified operator may serve as a designated person for the equipment he/she is certified to operate.

Design load.—The value used by the manufacturer as the maximum load around which the device or equipment is designed and built based on specified design factors and limits. This is also the load referred to as the manufacturer's rated load.

Design factor.—A numeric term that is usually expressed as a ratio of the ultimate stress, or yield stress, to the capacity of a component, or to the service load, or its rated capacity. It is also used or includes factors in calculations to quantify variations found in the properties of materials, manufacturing tolerances, operating conditions, and design assumptions.

Design safety factor.—See Design factor.

Deviation.—A variance that authorizes departure from a particular safety requirement that does not strictly apply or where the intent of the requirement is being met through alternate means that provide an equivalent level of safety with no additional risk.

Dummy load.—A test load, to simulate the real load; typically a test weight.

Eddy current brake (control braking means).—A method of controlling or reducing speed by means of an electrical induction load brake.

Emergency stop (e-stop).—A manually operated switch or valve to cut off electric power or control fluid power independently of the regular operating controls.

Failure modes and effects analysis (FMEA).—A systematic, methodical analysis performed to identify and document all identifiable failure modes at a prescribed level and to specify the resultant effect of the modes of failure.

Frequently.—For the purpose of this document, the term "frequently" is used to mean once or more per year.

Glenn Research Center (GRC)

Ground Support Equipment (GSE)

Hazard.—Any real or potential condition that can cause injury or death to personnel, or damage to or loss of equipment or property.

Hazard Analysis (HA)

Hoist.—A machinery unit device used for lifting and lowering a load.

Hoist supported personnel lifting device.—Lifting equipment such as a platform, bucket, or cage supported by hoist(s) that is designed, built, tested, maintained, inspected, and certified as having sufficient reliability for safely lifting and lowering personnel.

Holding brake.—A brake that automatically prevents motion when power is off.

Hydra-set.—Trade name for a closed-circuit hydraulically operated instrument installed between hook and payload that allows precise control of lifting operations and provides an indication of the applied load. It will be used in the general sense in this standard as a means of identifying precision load positioning devices.

Idle lifting device.—Lifting device that has no projected use for the next 12 months.

Infrequently.—For the purpose of this document, the term "infrequently" is used to mean less than once per year.

Jack.—A mechanism with a base and load point designed for controlled linear movement.

Certified operator.—Any person who has successfully completed the examination for crane, hoist, or heavy equipment operator and has been authorized to operate such equipment. (This term includes licensed and/or authorized operator.)

Lifting device and equipment (LDE).—Devices such as overhead and gantry cranes (including top running monorail, underhung, and jib cranes), mobile cranes, derricks, hoists, winches, special hoist supported personnel lifting devices, hydra-sets, load measuring devices, hooks, slings and rigging, mobile aerial platforms, powered industrial trucks, and jacks used for lifting and lowering.

Lifting Device and Equipment Committee (LDEC)

Lifting device and equipment manager (LDEM).—Person responsible for overall management of the installation lifting devices and equipment program, coordinating with appropriate personnel at their installation on lifting issues and providing their installation's position on lifting devices and equipment safety issues.

Linear fiber sling.—A sling where load bearing fibers are bundled in a linear fashion.

Liquefied petroleum gas (LPG)

Load.—The total load, including the sling or structural sling, below the hoisting device hook, being raised, lowered or moved.

Load-measuring device.—A measuring device below the hook that is part of the load path for lifting operations.

Mobile aerial platform.—A mobile device that has an adjustable position platform, supported from ground level by a structure.

National Aeronautics and Space Agency (NASA)

NASA operation.—Any activity or process that is under NASA direct control or includes major NASA involvement.

NASA Procedural Requirement (NPR)

Noncritical lift.—A lift involving routine lifting operations governed by standard industry rules and practices except as supplemented with unique NASA testing, operations, maintenance, inspection, and personnel licensing requirements contained in this standard.

Nondestructive testing (NDT).—The development and application of technical methods to examine materials or components in ways that do not impair future usefulness and serviceability in order to detect, locate, measure, and evaluate flaws; to assess integrity, properties, and composition; and to measure geometrical characteristics.

Operational or working load.—A value representing the weight of the load actually being handled plus the weight of the attaching equipment (slings, Hydra-set, spreader bars, etc.).

Operational test.—A test to determine if the equipment (limit switches, emergency stop controls, brakes, etc.) is functioning properly.

Payload.—The actual object, below the sling or structural sling, being raised, lowered or moved.

Periodic load test.—A load test performed at predetermined intervals with load greater than or equal to the rated load, but less than the proof load.

Personal protective equipment (PPE)

Personnel certification.—A means to assure an individual is qualified to perform a designated task.

Personnel lift.—For the purposes of this document, a working platform that will lift, lower, sustain, and transport people.

Platform hoist.—A dedicated hoist whose only purpose is to raise and lower a platform not carrying personnel.

Point of Contact (POC)

Preventative maintenance (PM)

Proof load.—The specific load or weight applied in performance of a proof load test and is greater than the rated load.

Proof load test.—A load test performed prior to first use, after major modification of the load path or at other prescribed times. This test verifies material strength, construction, and workmanship and uses a load greater than the rated load. Proof load test, as used in this standard, is equivalent to the OSHA-rated load test.

Rated load or safe working load or rated capacity.—An assigned weight that is the maximum load the device or equipment shall operationally handle and maintain. This value is marked on the device indicating maximum working capacity. This is also the load referred to as “safe working load” or “working load limit.” If the device has never been downrated or uprated, this also is the “manufacturer’s rated load.”

Regular service lifting device.—Lifting device that is being used one or more times per month.

Remote emergency stop (remote e-stop).—An emergency stop remotely located from the regular operator controls.

Safety and Health Division (SHeD)

Scaffold Industry Association (SIA)

Side pull.—That portion of the hoist pull acting horizontally when the hoist lines are not operating vertically.

Side load.—A load applied at an angle to the vertical plane of the hoist line.

Single failure point.—A single item or component whose failure would cause an undesired event such as dropping a load or loss of control.

Shall.—The word “shall” indicates that the rule is mandatory and must be followed.

Should.—The word “should” indicates that the rule is a recommendation, the advisability of which depends on the facts in each situation.

Sling.—A lifting assembly and associated hardware used between the actual object being lifted and hoisting device hook.

Special hoist supported personnel lifting device.—Device specifically designed to lift and lower persons via a hoist. These devices include hoist supported platforms where personnel occupy the platform during movement. These devices do not including elevators, lifting personnel with a crane, mobile aerial platforms, or platforms or others items hoisted unoccupied to a position and anchored or restrained to a stationary structure before personnel occupy the platform.

Standard (STD)

Standby lifting device.—Lifting device that is not in regular service but used occasionally or intermittently as required. Intermittent use is defined as a lifting device which has not been used for a period of one month or more, but less than 6 months.

Structural sling.—A rigid or semi-rigid fixture that is used between the actual object being lifted and hoisting device hook. Examples are spreader bars, equalizer bars, and lifting beams.

Surface nondestructive testing.—Test and inspection methods used to examine the surface of equipment/materials (e.g., magnetic particle and liquid penetrant).

Suspended load.—An operation is considered a suspended load operation and subject to the requirements of this standard if it meets **all three** of the following criteria:

- The operation involves the use of a crane or hoist that supports the weight of a suspended load.
- No distinction is made between a static load and a dynamic load.
- Rigging, i.e., slings, Hydra-sets, lifting fixtures, shackles, straps, when attached to the hook, is considered part of the load.

This excludes operations where the load is secured in a holding fixture or on substantial blocks supporting the entire load even though the crane/hoist hook may still be attached.

Personnel involved in the operation have any part of the body directly beneath the suspended load. (This excludes operations where employees have their hands on the sides of a load, i.e., to guide the load.)

In the event of a crane/hoist failure, as the load drops it could contact personnel working directly beneath it, with injury or death as a possible result.

This excludes operations where employees have their hands only partially under a load such that a crane or hoist device failure would push their hands out of the way not resulting in injury.

This also excludes situations where the falling load would come to rest on hardware that is not suspended before an employee could be injured.

Tagline.—A line used to restrain or control undesirable motion of a suspended load.

Valley break.—A broken wire in a wire rope in which the outside wire of a strand breaks in the immediate vicinity of the point where it contacts a wire or wires of an adjacent strand, generally at a point not visible when the wire rope is examined externally. One end of the broken wire is long enough to reach from one valley to the next one and the other end of the broken wire generally cannot be seen.

Variance.—Documented and approved permission to perform some act contrary to established requirements.

Volumetric nondestructive testing.—Test and inspection methods used to examine the interior of equipment/materials; e.g., ultrasonic and radiographic.

Waiver.—A variance that authorizes departure from a specific safety requirement, where a special level of risk has been documented and accepted.

Winch.—A stationary motor-driven or hand-powered hoisting machine having a drum around which is wound a rope, chain, or web used for lifting and lowering a load (does not apply to winches used for horizontal pulls).

Wire rope slings.—Wire ropes made into forms, with or without fittings, for handling loads and so made as to permit the attachment of an operating rope.

Working load.—If the device has never been downrated or uprated, this also is the “manufacturer’s rated load.”

APPENDIX B.—CRITICAL LIFT PROCEDURE TEMPLATE

NASA Glenn Research Center

Facility _____

Procedure No. _____

CRITICAL LIFTING PROCEDURE

for

Purpose for plan: _____

Identify flight package or other critical equipment to be lifted.

Date created: _____

Current rev.: _____

Prepared by: _____

Procedure utilized: _____ **for:** _____

Date *Description of lift*

REQUIRED SIGNATURES

Facility Manager (NASA) (*Print name*)	*Signature*	*Date*
Test Engineer (*Print name*)	*Signature*	*Date*
Project Manager (*Print name*)	*Signature*	*Date*
Quality Assurance Rep. (NASA) (*Print name*)	*Signature*	*Date*
Safety Assurance Branch Rep. (NASA) (*Print name*)	*Signature*	*Date*

1.0 OVERVIEW

The purpose of this document is to establish a reference guide for test specific lifting operations involving equipment identified as critical. The scope of this document covers all lifting of critical equipment related to the specified test or test article taking place within the_____ facility at NASA Glenn Research Center.

2.0 CRITICAL LIFT DEFINITION

A critical lift involves lifting and lowering operations involving space-flight hardware, one-of-a-kind articles, lifting of personnel, or major facility components whose loss would have serious programmatic impact. Refer to the **Glenn Safety Manual, Chapter 20** for more information.

3.0 CRITICAL LIFT IDENTIFICATION

Project Managers are responsible for identifying critical lifts related to a particular test, project or program. Facility Managers and Facility Operations Engineers are responsible for identifying critical lifts of facility components that are not related to a particular test.

For the _____ the following equipment to be lifted has been identified as critical:
(Insert facility, project or program name)

_____
(List of critical equipment)

4.0 GENERAL INSTRUCTIONS

4.1 Glenn Safety Manual

All personnel should be familiar with the **Glenn Safety Manual, Chapter 20, Lifting Devices and Equipment** and in particular **Critical Lift Requirements**. If there are any discrepancies regarding procedures and requirements between this document and the **Glenn Safety Manual (GSM)**, the GSM takes precedence.

4.2 Personnel

A Critical Lift Monitor shall be assigned to oversee lifting operations. The Crane Operator all lift riggers shall possess adequate training and certifications as described in the GSM. Other personnel required to be on site during critical lift operations include a Project Representative and a Quality Assurance and/or Safety Representative.

4.3 Equipment

All critical lifting equipment shall be accompanied by appropriate documentation that certifies load testing performed less than a year prior to the anticipated completion of critical lifting operations.

4.4 Pre-Lift Meeting

A pre-lift meeting shall be held at which the Crane Operator, Lift Rigger(s), Critical Lift Monitor, QA/Safety Representative(s), and all other personnel involved with critical lifting operations will review this procedure including crane operations, communication requirements, test specific requirements (Section 5.0), and emergency procedures (Section 6.0). The review shall also include personnel assignments and responsibilities.

5.0 TEST SPECIFIC REQUIREMENTS

(*Provide a brief description of the purpose of the critical lift, including program personnel and responsibilities.*)

_____

_____

_____

6.0 EMERGENCY PROCEDURES

In the event of building evacuation or electrical power outage, the crane shall be shut off and locked out. If it can be done so without excessive risk to personnel, the lift coordinator shall ensure the load is secured and the area is roped off and marked with signs warning of the suspended load.

7.0 PRE-LIFT OPERATIONS

7.1 Personnel Assignments

Lift Monitor: _____ **QA Rep.:** _____

Equipment Operator: _____ **Safety Rep.:** _____

Lift Leader: _____ **Project Rep:** _____

Lift Rigger: _____

Lift Rigger: _____ **Other (specify):** _____

7.2 Establish a safety exclusion zone for the lift defined by barriers in order to prevent unauthorized personnel from entering the area.

Monitor _____

7.3 Conduct pre-task briefing and assign jobs to personnel. Review emergency procedures, personnel locations during operations, channels of communication, and the lift procedure itself. Also, review the lift specific Job Hazard Analysis (JHA) and the Overhead Crane Hazard Analysis with all personnel. Verify that lift operators and riggers have valid certifications.

Monitor _____

7.4 Visually inspect all lifting equipment for certification, damages and completeness.

Monitor _____

7.5 Review and verify the weight of all items to be lifted.

Monitor _____

List all items including the description and weight of all items to be lifted.

7.6 Lift coordinator shall list all the lifting equipment needed below. Verify all lifting devices have the appropriate capacity and have been certified within the past twelve months including cranes, load positioners, lifting sling assemblies, shackles, load cells, wire rope assemblies, nylon straps, hoist rings, turnbuckles, and tag lines.

Monitor _____

Item	Description	Capacity	Model no.	Serial no.	Cert. date

7.7 Perform engineering/safety walk thru of the area.

Monitor _____

7.8 Perform a functional check out of the crane each day that critical lift operations are to occur. Follow the Crane Pre Operational Checklist at the end of this document. Ensure that the check sheet is completed.

Monitor _____

8.0 LIFTING PROCEDURE

***WARNING*.—The following steps are hazardous because of the lifting operation. No personnel shall be allowed to work or walk beneath a suspended load.**

Step no.:	Step description	Responsible title (technician, manager)	Step completed (Initials/ date)	Comments

APPENDIX C.—TYPICAL LIFT TEAM ROLES AND RESPONSIBILITIES

(Can be modified based on the number of lift personnel and complexity of the lift)

C.1 Lead/supervisor

- Plans and schedules the lifts to be performed for the day and selects lift monitor
- Notifies the selected lift monitor of the lifts taking place for the day with the expected lift time

C.2 Lift monitor

- Documents lift information in the lift procedure
- Selects lift team members
- Notifies the selected team members of the lifts taking place for the day with the expected lift time and gives direction when rigging and other pre-lift activities should take place to ensure the lift proceeds as scheduled
- Establishes safety zone and announces lift to affected personnel in the area
- Ensures a clear path is available for the item being lifted and the lift team
- Gives direction to crane operator regarding alignment and movement of crane and lift article
- Maintains crane certification requirements
- Attends pre- and post-lift meetings
- Performs lift based on approved procedure
- Communicates the crane's path of travel to the lift team prior to lift; movement does not occur until all clear is given by the entire team

C.3 Crane operator

- Inspects crane, slings, clamps, and rigging before lift
- Takes direction from the lift monitor
- Maintains crane certification requirements
- Attends pre and post lift meetings
- Performs lift based on approved procedure
- Assists with making a clear path available for the lift team

C.4 Riggers

- Inspects crane, slings, clamps and rigging before lift
- Maintains crane certification requirements
- Attends pre- and post-lift meetings
- Performs lift based on approved procedure
- Assists with making a clear path available for the lift team
- Attaches and removes rigging and clamps as indicated on lift procedure
- Places rigging in appropriate storage location
- Provides input to lift monitor when requested

C.5 Safety

- Ensures lift team maintains certification requirements in all aspects of the lifting equipment to be used
- Chairs the pre and post lift meetings and submits post lift notes to project management or facility manager
- Approves lift team selected by the lift monitor
- Ensures a clear path is available for the lift team
- Ensures lift is performed based on approved procedure

APPENDIX D.—APPROVED HAND SIGNALS FOR OVERHEAD CRANES

ASME B30.2-2005 OVERHEAD AND GANTRY CRANES

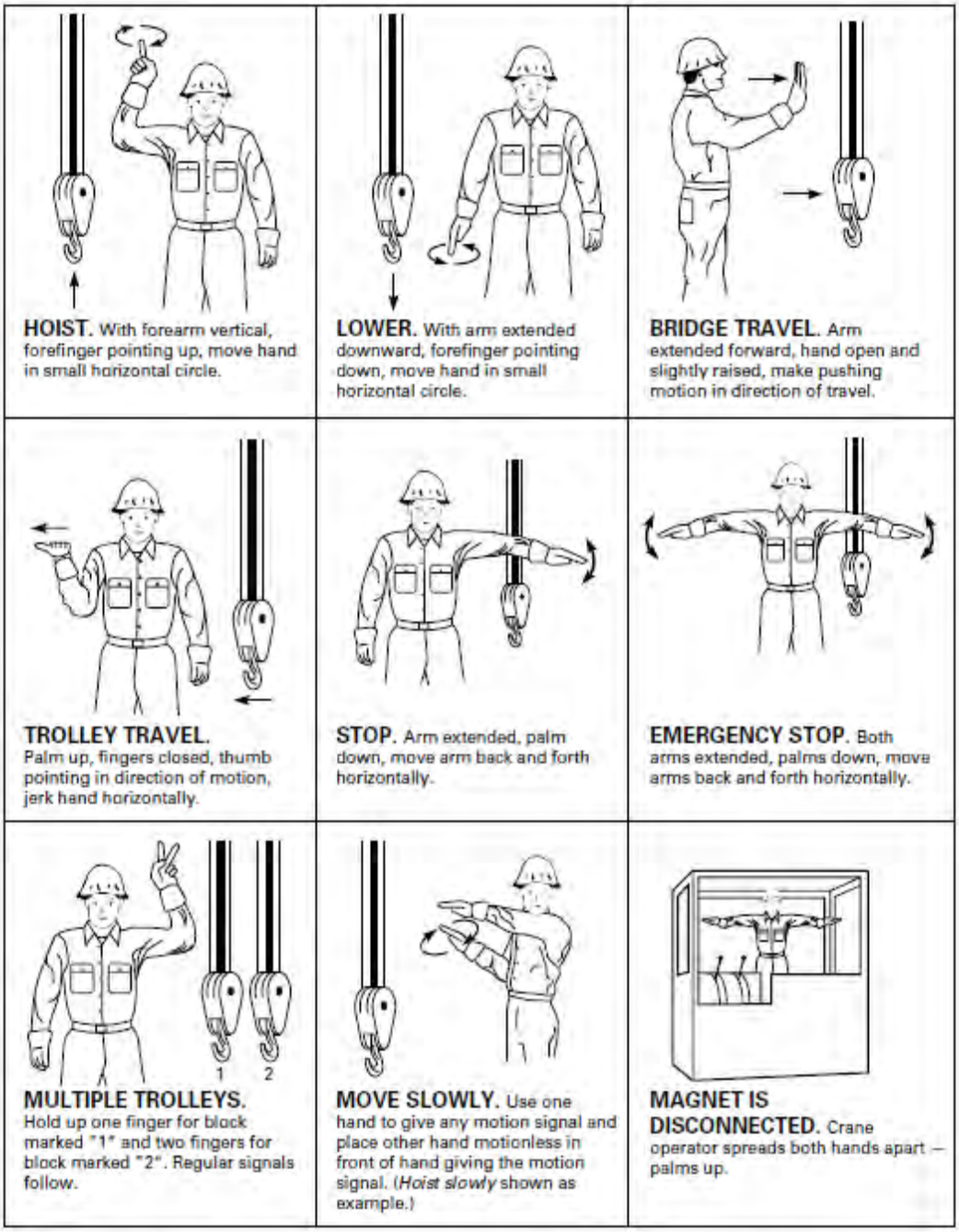

Figure D.1.—Standard hand signals for controlling overhead and gantry cranes.

APPENDIX E.—HAND SIGNALS FOR MOBILE CRANES

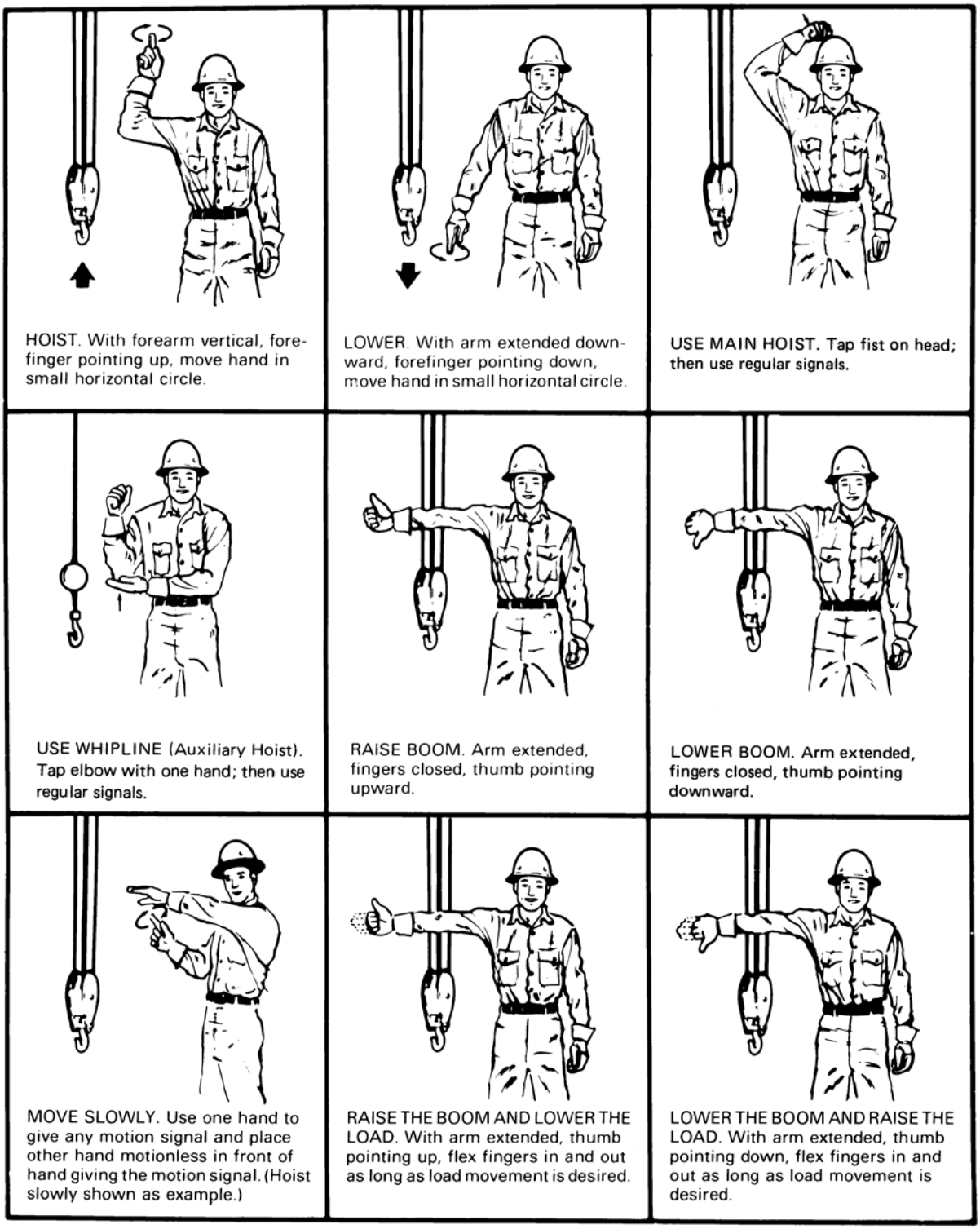

Figure E.1.—Standard hand signals for controlling mobile cranes.

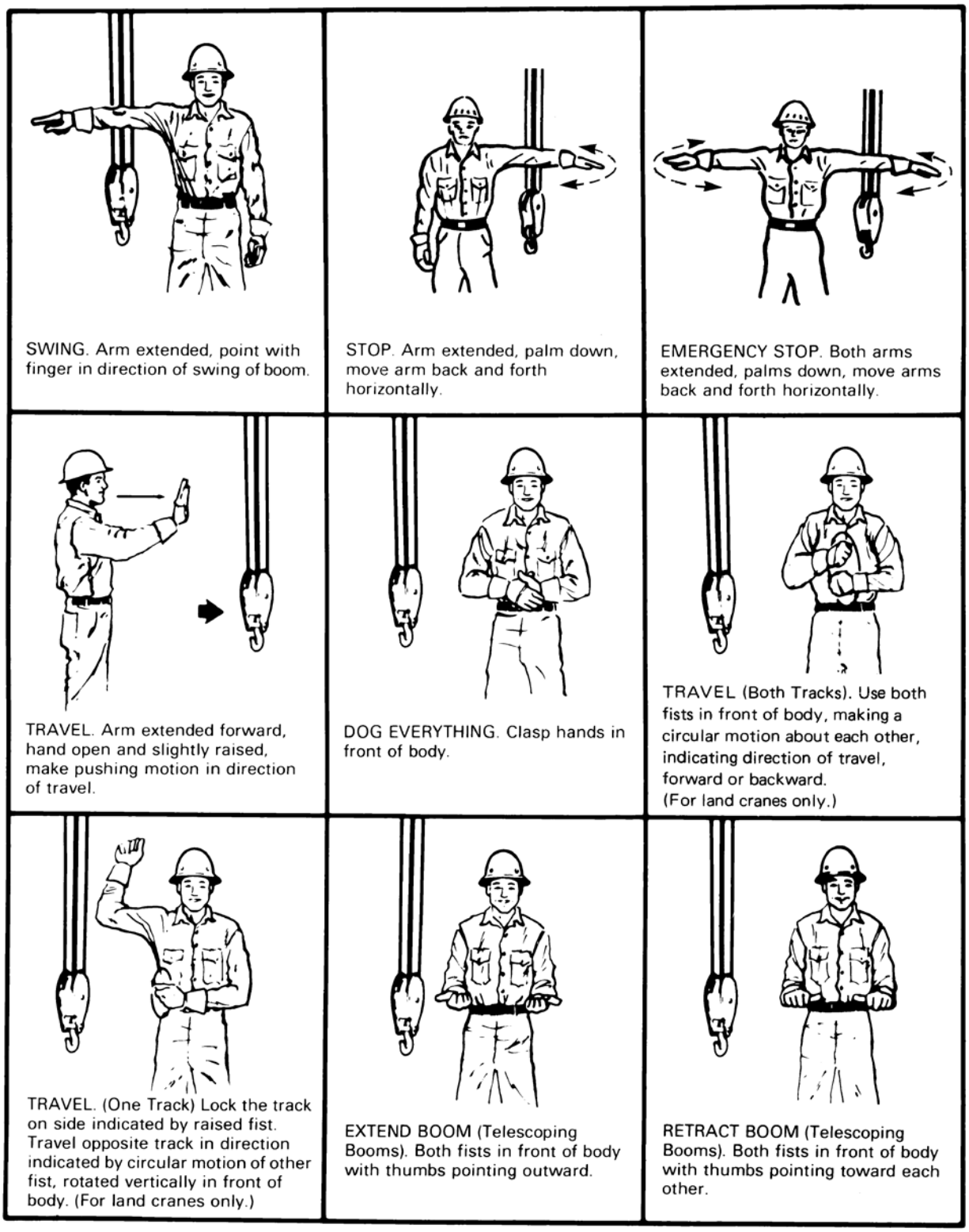

Figure E.2.—Continued.

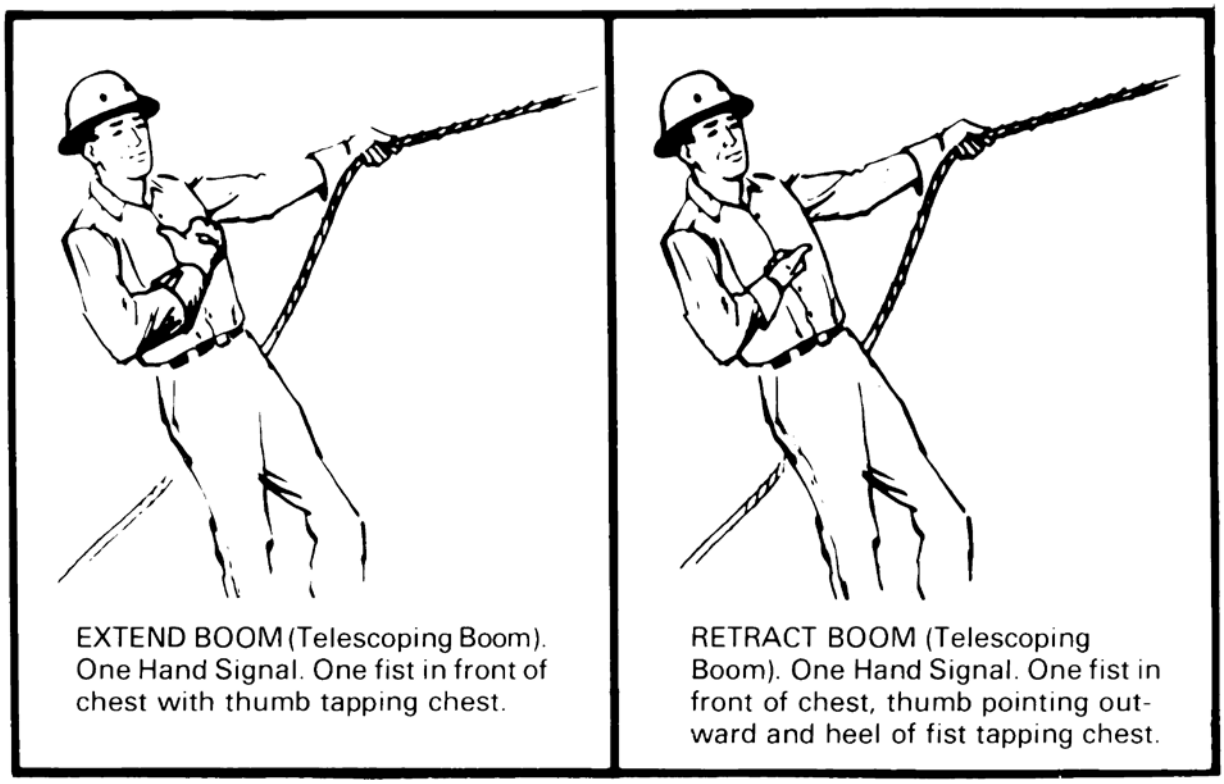

Figure E.3.—Concluded.

APPENDIX F.—ADDITIONAL RIGGING INFORMATION

F.1 Eyebolts

1. Only shoulder eyebolts are permitted to be used as lifting devices.
2. Orient the eyebolt in line with the slings. If the load is applied sideways, the eyebolt may bend.
3. Pack washers between the shoulder and the load surface to ensure that the eyebolt firmly contacts the surface. Ensure that the nut is properly torqued.
4. Engage at least 90 percent of threads in receiving a hole when using shims or washers.
5. Attach only one sling leg to each eyebolt.
6. Inspect and clean the eyebolt threads and the hole. Discard eyebolts with worn or damaged threads.
7. Screw the eyebolt on all the way down and properly seat.
8. Ensure the tapped hole for a screw eyebolt (body bolts) has a minimum depth of one-and-a-half times the bolt diameter.
9. Install the shoulder at right angles to the axis of the hole. The shoulder must be in full contact with the surface of the object being lifted.
10. Always use shackles to attach slings to the eyebolt. Do not run the sling through the eye.

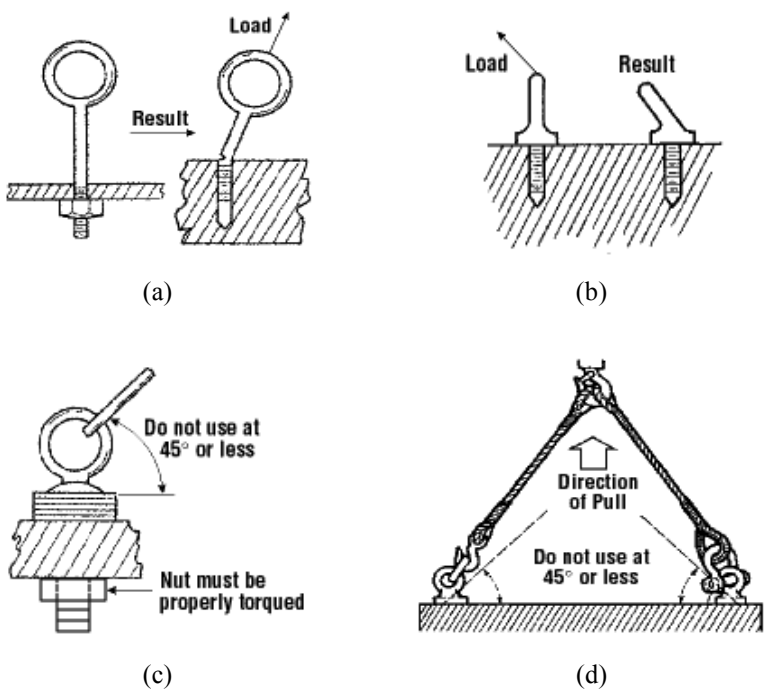

Figure F.1.—(a) and (b) Improper use of eyebolts. (c) and (d) Safe use of eyebolts.

F.2 Shackles

F.2.1 Shackle Selection

1. Anchor (bow type) and chain (D type) shackles are used with screw or round pins.
2. Selection is based on the safe working loads of the shackles.

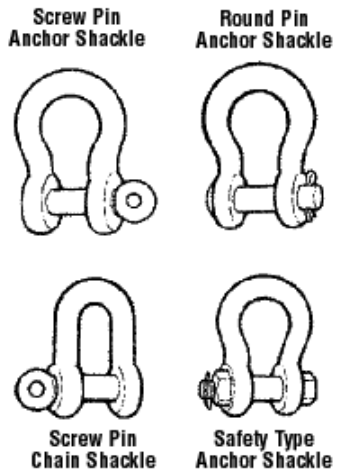

Figure F.2.—Shackle types.

F.2.2 Shackle Inspection

1. Ensure pins are straight.
2. Screw pins must be completely seated.
3. Cotter pins must be used with all round pin shackles.
4. Replace shackles worn in the crown or the pin by more than 10 percent of the original diameter.

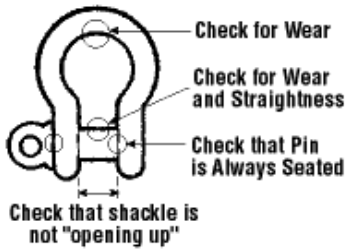

Figure F.3.—Shackle inspection.

F.2.3 Shackle Use

1. Shackle pins may not be replaced with a bolt. A load will bend the bolt.
2. Do not allow a shackle to be pulled at an angle. The legs will open. Pack the pin with washers to center the shackle.
3. Screw pin shackles may not be used if the pin can roll and unscrew. If the load shifts, the sling will unscrew the shackle pin.

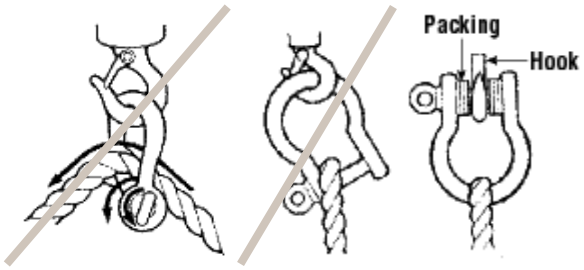

Figure F.4.—Shackle use.

F.3 Slings

F.3.1 Sling Selection

1. Determine the weight of the load to be lifted, sling angle, and working height available.
2. Select the right sling for each job using the manufacturers' tables.
3. Protect slings from damage by sharp edges with corner saddles, padding, or wooden blocks.
4. Ensure the slings are free from twist or tie knots.
5. Protect your hands and fingers; when slack is being taken out of a sling, keep them from between the sling and load so they will not be trapped and crushed. Step away before the lift is made.
6. Make sure a load is high enough to clear all objects before signaling for the crane to move.
7. Pick up unused slings, accessories, or blockings so they are not lying on the floor.

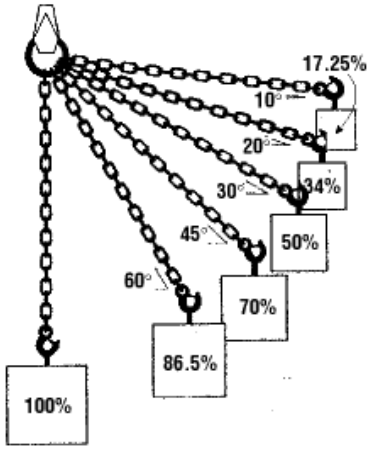

Angle/Horizontal Factor	
90	1.000
85	0.996
80	0.985
75	0.966
70	0.940
65	0.906
60	0.866
55	0.819
50	0.766
40	0.643
35	0.574
30	0.500

Figure F.5.—The effects of angle on a sling's load limit.

F.3.2 Vertical Hitches

1. In most cases use more than one sling. A single rope sling load tends to rotate in a twisting action that unwinds cables causing them to weaken.
2. Do not use for lifting loose materials or long or unbalanced loads.

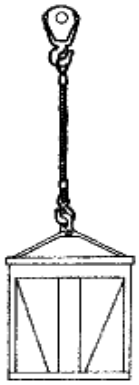

Figure F.6.—Vertical hitch.

F.3.3 Turning Hitches

1. Use a doubled choker to turn loads.
2. Place both sling eyes on top of the load pointing in the direction opposite to the direction of the turn. This ensures the sling will remain tight while the load is turning.
3. Never use a basket hitch to turn a load.

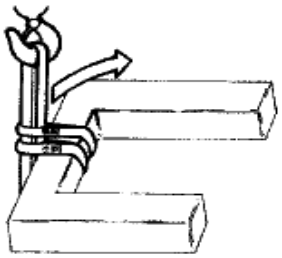

Figure F.7.—Turning hitch.

F.3.4 Choker Hitches

1. Choker hitches allow the sling to tighten on a load as it is lifted.
2. Do not use on loose bundles.
3. Use choker hitches at 75 percent or less of rated sling capacity.

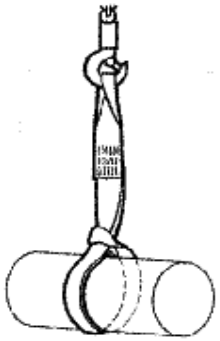

Figure F.8.—Choker hitch.

F.3.5 Double Choker Hitch

1. Provides more contact area to secure a load.

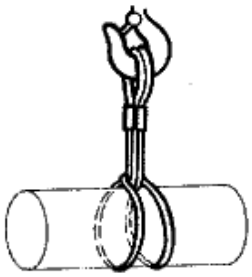

Figure F.9.—Double choker hitch.

F.3.6 Double Wrap Choker Hitch

1. This hitch compresses the load and prevents it from slipping out of the sling.
2. Where overhead space is limited, a double wrapped choker hitch is acceptable.

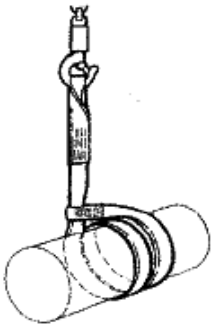

Figure F.10.—Double wrap choker hitch.

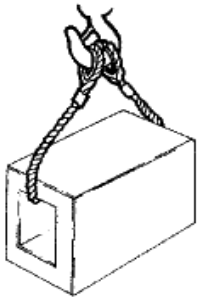

Figure F.11.—Basket hitch.

F.3.7 Basket Hitches

1. Provide relatively good control and eliminates the tendency of the load to twist, compared with a vertical hitch.
2. Do not use on a load that is difficult to balance.

F.3.8 Double Basket Hitches

1. Balance loads by keeping slings apart.
2. Prevent sling slippage by keeping the angle between the load and sling 60° or more.

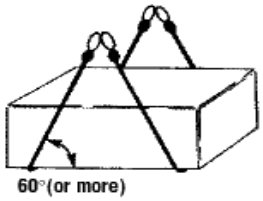

Figure F.12.—Double basket hitch.

F.3.9 Double Wrap Basket Hitches

1. Provide more contact for handling loose material and pipe.
2. Tend to draw the load together.

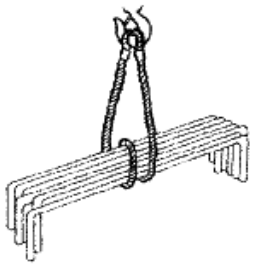

Figure F.13.—Double wrap basket hitch.

F.3.10 Bridle Hitches

1. Are made of 2, 3, or 4 single-leg hitches.
2. Are used for hoisting an object that has lifting lugs or attachments.
3. Position the hook over the centre of gravity of the load.
4. Adjust sling leg lengths with turnbuckles to level raised load.
5. Check each sling leg angle to ensure sling is not overloaded.

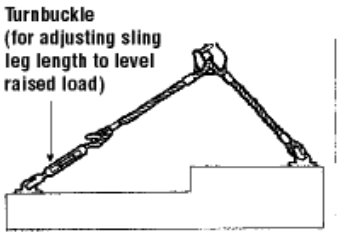

Figure F.14.—Bridle hitch.

F.4 Plate Clamps

F.4.1 Inspecting Plate Clamps

1. Inspect internal and external surfaces for forging or weld fractures, wear and distortion before each lift.
2. Check all pin holes for wear.
3. Inspect the throat (clamp opening) width. When empty, the cam should be in full contact with the pad.

4. Measure the width of the throat. If the measurement at the base, where the pad is located is greater than at the top, the body has been overloaded. Replace the clamp; tag the defective clamp and remove it from service.
5. The cam spring must be strong enough to hold the cam against the pad.
6. There must be "definite tension" in the locked position.
7. The spring must not be bent or distorted.
8. The lock assembly must rotate freely without binding and must rest fully on the stop pin.
9. Examine the cam surface. If the teeth are flattened by 50 percent or more, replace the cam and pad.
10. Teeth must be sharp and free of foreign material.

Figure F.15.—Plate clamp.

F.4.2 Using Plate Clamps

1. Use the correct clamp for a job.
2. Use two or more clamps to balance a long or flexible load.
3. When using a vertical type of plate clamp, use a locking device to prevent accidental loosening.
4. Use horizontal types of plate clamps in pairs.
5. Select a clamp within the load rating and appropriate jaw thickness for the load.
6. Lock a clamp closed before lifting a load.
7. Use a sling between the clamp and the crane or hoist hook.

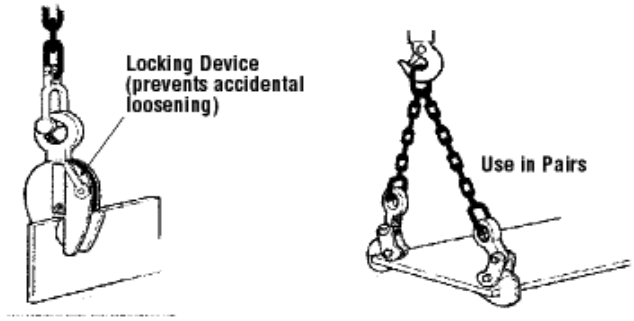

(a) (b)

Figure F.16.—Using plate clamps safely.

F.5 Wire Rope Slings

F.5.1 Sling Selection

1. Follow the manufacturers' charts and tables on sling types, angles, and rope diameters.
2. Follow the manufacturers' recommendations on clips and clamps of suitable size and design for ropes of different size.
3. Remember that a socket and clip fittings used to attach the rope determine the sling's load limit. Fittings have 75 to 100 percent of the breaking load of the rope.
4. Remember that the safe load limit of a sling also depends on the hitch (method of applying a sling to the load). The type of hitch depends on
   a. The kind of material to be lifted
   b. The safe load limit of the sling
   c. The presence (or absence) of lugs on the load
   d. The headroom

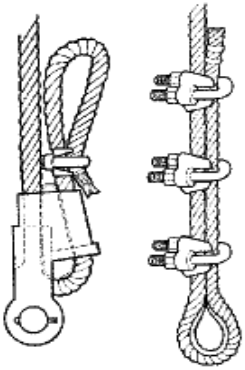

Figure F.17.—Proper installation of clips.

F.5.2 Inspection of Slings

1. Examine slings for wear, fatigue, crushed or broken wires, kinking, ballooning or "bird-caging," heat damage, etc.
2. Keep wire rope slings well lubricated or protected with an approved coating and inspect them often.
3. Remove damaged slings from service and tag appropriately.
4. Store slings on racks in a clean, dry place.
5. Center the sling load to prevent the load from shifting suddenly and causing a shock to the load.
6. Do not bend slings around sharp edges. Protect them by using corner saddles, padding, or wood blocks.
7. Do not use slings with knots.

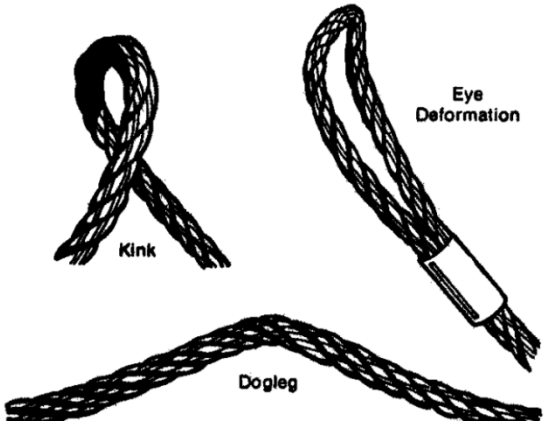

Figure F.18.—Wire rope slings can be easily damaged, carefully inspect for these deformations.

APPENDIX G.—SAMPLE CRANE FMEA

Building no./Room/Location

Crane Hazards Analysis—Date

Objective.—Complete Failure Modes and Effects Analysis (FMEA) in accordance with Section 4.2.3 of NASA–STD–**8719.9**

Scope of work.—

List of attendees

G.1 FMEA Notes

TABLE G.1.—SYSTEM TABLES

System 1.0—Hoist—4-Hoist Crane System With Identical Controls and Limits													
Subsystem 1.1—Motor—The hoist motor is the power source for up and down movement of loads.													
Ctrl#	**Describe**	**Causes**	**Effects**	**Safeguards**	**S1**	**L1**	**R1**	**Recommend**	**Comments**	**S2**	**L2**	**R2**	**Status**
1.1.01	A power failure	Facility power outage	A power failure could cause a dropped load resulting in damage to the equipment	The brake is designed to meet the crane's capacity The brake is load tested per certification requirements (up to date) Initial lift is performed slowly Pre-ops check During a power outage, the brake fails on	2	E	5						
1.1.02	A power failure	Facility power outage	A power failure could cause a dropped load resulting in employee injury or death	The brake is designed for crane capacity The brake is load tested per certification requirements (up to date) Initial lifting is done slowly Pre-ops check During a power outage, the brake fails on The crane lift and travel area is restricted from employees Personnel are not permitted underneath the lift area	1	E	4						

System 1.0—Hoist—4-Hoist Crane System With Identical Controls and Limits													
Subsystem 1.2—Motor—Drum and wire rope. The drum is the fixture for the wire rope.													
Ctrl#	**Describe**	**Causes**	**Effects**	**Safeguards**	**S1**	**L1**	**R1**	**Recommend**	**Comments**	**S2**	**L2**	**R2**	**Status**
1.2.01	The rope can separate from the drum	Lowering the hook beyond the operational lower limit	The rope can separate from the drum and cause a dropped load resulting in damage to the equipment	Pre-ops check The crane is load tested and inspected annually Crane is certified for 15 tons (load will be less than rated capacity) A certified crane operator will operate the crane Hoist is designed so that the wire rope remains wrapped around drum twice at hooks lowest point Lift does not go below floor grade	2	E	5						
1.2.02	The rope can separate from the drum	Lowering the hook beyond the operational lower limit	The rope can separate from the drum and cause a dropped load resulting in employee injury or death	Pre-ops check The crane is load tested and inspected annually The crane is certified for 30 tons (maximum load weight is 20 tons) A certified crane operator will operate the crane Hoist is designed so that the wire rope remains wrapped around drum twice at hooks lowest point Lift does not go below	1	E	4						

System 1.0—Hoist—4-Hoist Crane System With Identical Controls and Limits													
Subsystem 1.2—Motor—Drum and wire rope. The drum is the fixture for the wire rope.													
Ctrl#	**Describe**	**Causes**	**Effects**	**Safeguards**	**S1**	**L1**	**R1**	**Recommend**	**Comments**	**S2**	**L2**	**R2**	**Status**
				floor grade The crane lift and travel area is restricted from employees Personnel are not permitted underneath the lift area									
1.2.03	The rope could kink	Rope does not wind around drum correctly	The rope could kink and cause dropped load resulting in equipment damage or employee injury or death	Pre-ops check Visual indication that rope is kinked during pre-op. The crane lift and travel area is restricted from employees Personnel are not permitted underneath the lift area Hoist includes cast iron rope guides to prevent wire rope overlap	1	E	4						
1.2.04	Alignment of Rope drum can be off	Rope does not wind around drum correctly	Alignment of Rope drum can be off causing unexpected movement of load (shocking the hardware) and excessive wear of wire rope	Visual indication that alignment is off Alignment is verified during pre-op Hoist includes cast iron rope guides to prevent wire rope overlap	2	E	5						

System 1.0—Hoist—4-Hoist Crane System With Identical Controls and Limits													
Subsystem 1.2—Motor—Drum and wire rope. The drum is the fixture for the wire rope.													
Ctrl#	**Describe**	**Causes**	**Effects**	**Safeguards**	**S1**	**L1**	**R1**	**Recommend**	**Comments**	**S2**	**L2**	**R2**	**Status**
1.2.05	Travel of wire rope can be excessive	Crane operators would allow the hook to be lowered beyond the operational design.	Travel of wire rope can be excessive causing damage to the equipment	Trained and certified crane operators and lift managers will keep the load in sight Hoist is designed so that the wire rope remains wrapped around drum twice at hooks lowest point		E	5						

System 1.0—Hoist—4-Hoist Crane System With Identical Controls and Limits													
Subsystem 1.3—Brake—The brake holds back the load if there is a loss of power, motor failure or the control switch is de-energized.													
Ctrl#	**Describe**	**Causes**	**Effects**	**Safeguards**	**S1**	**L1**	**R1**	**Recommend**	**Comments**	**S2**	**L2**	**R2**	**Status**
1.3.01	The brake fails to engage	Broken spring, power failure, electrical component failure.	If the brake fails to engage it could cause a dropped load resulting in equipment damage	The crane is load tested and inspected annually Pre-ops check Functional test of brakes in pre-op Hoist is designed so that the wire rope remains wrapped around drum twice at hooks lowest point If there is a power outage, the brakes fail on	2	E	5						
1.3.02	The brake fails to engage	Broken spring, power failure, electrical component failure.	If the brake fails to engage it could cause a dropped load resulting in employee injury or death	The crane lift and travel area is restricted from employees Personnel are not permitted underneath the lift area The crane is load tested and inspected annually Functional test of brakes in pre-op If there is a power outage, the brakes remain on	1	E	4						

System 1.0—Hoist—4-Hoist Crane System With Identical Controls and Limits													
Subsystem 1.4—Upper Limit Switch—The upper limit switch prevents upper travel of the hoist beyond the design limits.													
Ctrl#	**Describe**	**Causes**	**Effects**	**Safeguards**	**S1**	**L1**	**R1**	**Recommend**	**Comments**	**S2**	**L2**	**R2**	**Status**
1.4.01	The vertical switch does not engage	Facility power outage	If the vertical switch does not engage it could cause damage to the hardware of crane	Mechanical stop as a back-up to limit switch Pre-ops check Certified crane operator will keep the load in sight	2	E	5						Open

System 1.0—Hoist—4-Hoist Crane System With Identical Controls and Limits													
Subsystem 1.5—Hook—The hook holds the entire weight of the load.													
Ctrl#	**Describe**	**Causes**	**Effects**	**Safeguards**	**S1**	**L1**	**R1**	**Recommend**	**Comments**	**S2**	**L2**	**R2**	**Status**
1.5.01	A fracture of the hook	Hook is damaged from improper rigging, excessive load	A fracture of the hook could cause a dropped load resulting in employee injury or death	The crane is load tested and inspected annually Personnel are not permitted underneath the lift area The crane lift and travel area is restricted from employees Crane is rated for 30 tons (load will be less than the rated capacity) and maximum load is 20 tons. Pre-ops check Certified crane operator will operate the crane	1	E	4						Open
1.5.02	A fracture of the hook	Hook is	A fracture of the	The crane is load	2	E	5						

System 1.0—Hoist—4-Hoist Crane System With Identical Controls and Limits													
Subsystem 1.5—Hook—The hook holds the entire weight of the load.													
Ctrl#	**Describe**	**Causes**	**Effects**	**Safeguards**	**S1**	**L1**	**R1**	**Recommend**	**Comments**	**S2**	**L2**	**R2**	**Status**
		damaged from improper rigging, excessive load	hook could cause a dropped load resulting in equipment damage	tested and inspected annually Crane is rated for 30 tons (load will be less than rated capacity) and maximum load is 20 tons. Pre-ops check Certified crane operator will operate the crane									

System 2.0—Bridge—Two Bridges With Identical Controls and Limits													
Subsystem 2.1—Motor/Drive System–The crane motor and drive system traverses the bridge (forward or reverse).													
Ctrl#	**Describe**	**Causes**	**Effects**	**Safeguards**	**S1**	**L1**	**R1**	**Recommend**	**Comments**	**S2**	**L2**	**R2**	**Status**
2.1.01	Motor failure or loss of power to motor	Facility power outage	Motor failure or loss of power to motor could cause an interruption of operations	Pre-ops check The crane is load tested and inspected annually If there is a power outage, the brakes remain on	4	D	6						
2.1.02	Bridge Collision	Controller/Operator failure	Damage to crane	Each bridge has anti-collision bumpers Bridges have close proximity alarm A certified crane operator will operate the crane	2	D	4						
2.1.03	Bridge Collision	Controller/Operator Failure	Damage to load on crane	Each bridge has anti-collision bumpers Bridges have close proximity alarm A certified crane operator will operate the crane	2	D	4						
2.1.04	Bridge Collision	Controller/Operator Failure	Collision could cause a dropped load resulting in employee injury or death	Each bridge has anti-collision bumpers Bridges have close proximity alarm A certified crane operator will operate the crane Personnel are not permitted underneath the lift area	1	E	4						

System 2.0—Bridge—Two Bridges With Identical Controls and Limits													
Subsystem 2.2—Rollers—The bridge rollers allows the bridge to travel on the rails.													
Ctrl#	**Describe**	**Causes**	**Effects**	**Safeguards**	**S1**	**L1**	**R1**	**Recommend**	**Comments**	**S2**	**L2**	**R2**	**Status**
2.2.01	Worn out or abraded rollers	Wear and tear; obstruction on rail, excessive load	Worn out or damaged rollers would not allow for smooth travel and could cause an interruption of operations	Pre-ops check Annual certification of crane A certified crane operator will operate the crane	4	D	6						

System 2.0—Bridge—Two Bridges With Identical Controls and Limits													
Subsystem 2.3—Mechanical Stops—The mechanical stops provide physical interruption of traverse movement.													
Ctrl#	**Describe**	**Causes**	**Effects**	**Safeguards**	**S1**	**L1**	**R1**	**Recommend**	**Comments**	**S2**	**L2**	**R2**	**Status**
2.3.01	The stops could break off under excessive load or impact	Operating the crane too far along the bridge	The stops could break off under excessive load or impact causing damage to the facility or hardware	Personnel are not permitted underneath the lift area Certified crane operator will keep the load in sight	2	E	5						
2.3.02	The stops could break off under excessive load or impact	Operating the crane too far along the bridge	The stops could break off under excessive load or impact causing employee injury or death	Personnel are not permitted underneath the lift area The crane lift and travel area is restricted from employees Certified crane operator will keep the load in sight	1	E	4						

System 3—4 Trolleys, 2 Per Bridge With Identical Controls and Limits													
Subsystem 3.1—Motor/Drive System—The trolley motor and drive system provides left and right movement of the load.													
Ctrl#	**Describe**	**Causes**	**Effects**	**Safeguards**	**S1**	**L1**	**R1**	**Recommend**	**Comments**	**S2**	**L2**	**R2**	**Status**
3.1.01	Motor failure or loss of power to the motor	Loss of power to the motor	Motor failure or loss of power to the motor could cause an interruption of operation.	Pre-ops check The crane is load tested and inspected annually	4	D	6						

System 3—4 Trolleys, 2 Per Bridge With Identical Controls and Limits													
Subsystem 3.2—Rollers—The trolley rollers allows the trolley to travel on the rails.													
Ctrl#	**Describe**	**Causes**	**Effects**	**Safeguards**	**S1**	**L1**	**R1**	**Recommend**	**Comments**	**S2**	**L2**	**R2**	**Status**
3.2.01	Worn out or abraded rollers	Wear and tear; obstruction on rail, excessive load	Worn out or abraded rollers would not allow for smooth travel causing an interruption of operations	Pre-ops check The crane is load tested and inspected annually A certified crane operator will operate the crane	4	D	6						
3.2.02	Trolley collision	Controller Failure	Damage to trolley	Each trolley has anti-collision bumpers A certified crane operator will operate the crane	2	D	4						
3.2.03	Trolley collision	Controller Failure	Damage to load	Each trolley has anti-collision bumpers A certified crane operator will operate the crane	2	D	4						

System 3—4 Trolleys, 2 Per Bridge With Identical Controls and Limits													
Subsystem 3.2—Rollers—The trolley rollers allows the trolley to travel on the rails.													
Ctrl#	**Describe**	**Causes**	**Effects**	**Safeguards**	**S1**	**L1**	**R1**	**Recommend**	**Comments**	**S2**	**L2**	**R2**	**Status**
3.2.04	Trolley collision	Controller failure	Collision could cause a dropped load resulting in employee injury or death	Each trolley has anti-collision bumpers A certified crane operator will operate the crane Personnel are not permitted underneath the lift area	1	E	4						

System 3—4 Trolleys, 2 Per Bridge With Identical Controls and Limits													
Subsystem 3.3—Stops—The trolley stops provide physical stop at the edge of the bridge rail.													
Ctrl#	**Describe**	**Causes**	**Effects**	**Safeguards**	**S1**	**L1**	**R1**	**Recommend**	**Comments**	**S2**	**L2**	**R2**	**Status**
3.3.01	The bridge rail stops could break off under excessive load or impact	Excessive load or impact from operating the crane at or beyond it's bridge rail edge	The stops could break off under excessive load or impact causing damage to the facility or hardware	The crane lift and travel area is restricted from employees Certified crane operator will keep the load in sight	2	E	5						
3.3.02	The bridge rail stops could break off under excessive load or impact	Excessive load or impact from operating the crane at or beyond it's bridge rail edge	The stops could break off under excessive load or impact causing injury or death to employees	Personnel are not permitted underneath the lift area The crane lift and travel area is restricted from employees Certified crane operator will keep the load in sight	1	E	4						

System 4—Control System Remote Radio Control or Pendant													
Subsystem 4.1—Hand Control System—The hand control system is the human to machine interface.													
Ctrl#	**Describe**	**Causes**	**Effects**	**Safeguards**	**S1**	**L1**	**R1**	**Recommend**	**Comments**	**S2**	**L2**	**R2**	**Status**
4.1.01	A loss of power to the control system	Battery failure on radio or Electrical failure, cut line on pendant	A loss of power to the control system would cause an interruption of operations	Pre-ops check A certified crane operator will operate the crane Crane systems fail safe during loss of power	4	D	6						
4.1.02	A loss of power to the control system	Battery failure on radio or Electrical failure, cut line on pendant	A loss of control in the control system there could result in employee injury or death	Personnel are not permitted underneath the lift area The crane lift and travel area is restricted from employees A certified crane operator will operate the crane Pre-ops check Crane systems fail safe during loss of power	1	E	4	Would fail safe					
4.1.03	A loss of power to the control system	Battery failure on radio or Electrical failure, cut line on pendant	A loss of control in the control system could result in damage to the facility or hardware	A certified crane operator will operate the crane Pre-ops check Crane systems fail safe during loss of power	2	D	4						

System 5.0—Operator—The Operator is Responsible for Movement and Operation of the Crane													
Ctrl#	**Describe**	**Causes**	**Effects**	**Safeguards**	**S1**	**L1**	**R1**	**Recommend**	**Comments**	**S2**	**L2**	**R2**	**Status**
5.01	Misinterpretation of a signal or receipt of the wrong signal from the lift monitor	Wrong use of verbal or hand signals	Misinterpretation of a signal or receipt of the wrong signal from the lift leader could result in hardware shock due to impact	Lift monitor and crane operator are certified in crane operations The crane lift and travel area is restricted from employees to minimize distractions	2	D	4						
5.02	Misinterpretation of a signal or receipt of the wrong signal from the lift monitor	Wrong use of verbal or hand signals	Misinterpretation of a signal or receipt of the wrong signal from the lift monitor could result personnel injury or death	Lift monitor and crane operator are certified in crane operations The crane lift and travel area is restricted from employees to minimize distractions Proper PPE required	1	E	4						

System 6.0—Synchronized Crane Operations—Using Either Two Trolleys and One Bridge or 4 Trolleys and Two Bridges													
Subsystem 6.1—Lifting Loads with 2 trolley and one bridge and/or 4 trolley two bridge													
Ctrl#	**Describe**	**Causes**	**Effects**	**Safeguards**	**S1**	**L1**	**R1**	**Recommend**	**Comments**	**S2**	**L2**	**R2**	**Status**
6.1.01	Trolleys could become unsynchronized	Controller failure Operator error	Damage to equipment	Lift leader and crane operator are certified in crane operations Pre trial lift and conducted without load	2	E	5						
6.1.02	Trolleys could become unsynchronized	Controller failure Operator error	Damage to load	Lift leader and crane operator are certified in crane operations Pre trial lift and conducted without load	1	E	4						
6.1.03	Trolleys could become unsynchronized	Controller failure Operator error	Separation of lifting devices can cause a dropped load resulting in employee injury or death	Lift leader and crane operator are certified in crane operations Pre trial lift and conducted without load Personnel are not permitted underneath the lift area	1	E	4						

TABLE G.2.—SEVERITY DETERMINATION TABLE

Category	Personnel illness/injury	Equipment loss ($K)	Downtime	Data integrity	Environmental effect
I Catastrophic	Death	>1,000	>4 months	Data never recoverable or primary program objectives lost	>5 years or >$1M to correct and/or penalties
II Critical	Severe injury or illness	1,000 to 250	4 months to 2 weeks	Repeat program	1 to 5 years or $250 to $1M to correct and/or penalties
III Marginal	Minor injury or illness	250 to 25	2 weeks to 1 day	Repeat test period	<1 yr or $25K to $250K to correct and/or penalties
IV Negligible	No injury or illness	25 to 1	<1 day	Repeat data point or data requires minor manipulation or computer rerun	Minor or <$25K to correct

TABLE G.3.—PROBABILITY DETERMINATION TABLE

Level	Description	Quantitative	Definition
A	Frequent	Likely to occur repeatedly in system/component life cycle	$X > 10^{-1}$
B	Probable	Likely to occur several times in system/component life cycle	$10^{-1} \geq X > 10^{-2}$
C	Occasional	Likely to occur at some time in system/component life cycle	$10^{-2} \geq X > 10^{-3}$
D	Remote	Not Likely to occur at some time in system/component life cycle, but possible	$10^{-3} \geq X > 10^{-6}$
E	Improbable	So unlikely it can be assumed occurrence may not be experience	$10^{-6} \geq X$
F	Impossible	Occurrence is physically impossible	

TABLE G.4.—RISK ASSESSMENT CODE MATRIX

RAC	A Frequent	B Probable	C Occasional	D Remote	E Improbable
I Catastrophic	1	1	2	3	4
II Critical	1	2	3	4	5
III Marginal	2	3	4	5	6
IV Negligible	3	4	5	6	7

TABLE G.5.—RISK ASSESSMENT CODES (RAC) AT GRC

RAC	Definition at GRC
1 to 2	Unacceptable
3	Undesirable—Director must review and approve
4 to 7	Acceptable with Area Safety Committee review

Contents

1.0 PURPOSE 2
2.0 APPLICABILITY 2
3.0 BACKGROUND 2
4.0 POLICY 3
5.0 RESPONSIBILITIES 3
5.1 Safety, Health and Environmental Division Chief or Designee 3
5.2 Community and Media Relations Office 3
5.3 Office of Human Capital Management 3
5.4 Procurement Division 3
5.5 Office of the Chief Counsel 4
5.6 Occupational Medicine Services 4
5.7 Incident Commander 4
5.8 Investigating Authority 4
5.9 Office of Protective Services 4
5.10 Interim Response Team 4
5.11 Responsible Organization 5
5.12 Supervisor 5
5.13 Employees 5
6.0 REQUIREMENTS 5
6.1 Reporting Mishaps and Close Calls (*NPR 8621.1B, 29 CFR 1904*) 5
6.1.1 Emergency Reporting, and Notification 5
6.1.2 NASA's Incident Reporting Information System Database 6
6.1.3 Type A and B Mishaps and Other Highly Visible Mishaps and Close Calls 6
6.1.4 Type C and Type D Mishaps and Close Calls 7
6.1.5 Drug Testing 7
6.1.6 Criminal Activity 7
6.1.7 Reporting Days Away From Work (Civil Service and Contractor) 7
6.1.8 Other NASA Centers Performing Work at GRC 8
6.1.9 Reporting Unsafe Activity or Condition 8
6.2 Mishap Investigations (*NPR 8621.1B*) 8
6.2.1 Investigations 8
6.2.2 How to Investigate Incidents 9
6.2.3 Mishap Investigation Boards 10
6.2.4 Mishap Investigation Board Reports 10
6.2.5 Nonboard Mishap Investigation Reports 10
6.2.6 Nonboard Type C and D Mishap and Close-Call Investigations 10
6.3 Investigation Timeline 11
6.4 Corrective Action 11
6.5 Lessons Learned from Mishaps and Close Calls 12
6.6 Training 12
6.7 Mishap and Incident Processing for Classified Projects 12
6.8 The following items are to be determined 12
7.0 RECORDS 13
8.0 REFERENCES 13
APPENDIX A.—DEFINITIONS AND ACRONYMS 14

List of Figures

Figure 6.1.—Quick incident menu. 6

Chapter 21—Mishap and Close Call Reporting, Investigating, and Recordkeeping

NOTE: *The current version of this chapter is maintained and approved by the Safety, Health and Environmental Division (SHED). The last revision date of this chapter was June 2010. The current version is located on the Glenn Research Center intranet at http://smad-ext.grc.nasa.gov/shed/pub/gsm/chapter_index.shtml. Approved by Chief of Safety, Health, and Environmental Division.*

1.0 PURPOSE

The purpose of this chapter is to provide requirements to report, investigate, and document mishaps, close calls, and previously unidentified workplace hazards to prevent recurrence of similar accidents. The safety investigation shall not be used to direct or justify disciplinary action for mishaps or close calls. This chapter provides requirements for classifying mishaps, establishing investigation authorities, and performing investigations.

2.0 APPLICABILITY

This chapter is applicable to all civil servant and support service contractor employees, construction contractors, students, and visitors at NASA Glenn Research Center (GRC) sites. This chapter is applicable to mishaps and close calls that occur at GRC's Lewis Field and Plum Brook Station.

3.0 BACKGROUND

The Occupational Safety and Health Administration (OSHA) requires employers to record and report work-related fatalities, injuries, and illnesses to the Government. Recording or reporting a work-related injury, illness, or fatality does not necessarily mean that an employer or employee was at fault, that an OSHA rule has been violated, or that the employee is eligible for workers' compensation or other benefits. OSHA's injury and illness recordkeeping and workers' compensation are independent of each other.

The records provide base data for the Bureau of Labor Statistics survey of occupational injuries and illnesses, the Nation's primary source of occupational injury and illness statistics. The records are also used by employers and employees to manage safety and health programs at individual workplaces. Analysis of the data is a widely recognized method for discovering workplace safety and health problems and for tracking progress in solving those problems. The data are also used by OSHA.

Injury and illness records are critical indicators of safety and health—both for employers and for OSHA. They tell us how we are doing in our efforts to keep workers safe. They pinpoint weaknesses—breakdowns in machinery, inadequate personal protective equipment, failures in communication, and insufficient training. When a worker gets sick or hurt, something has gone wrong. Employers need to look at these cases to see if they can take action to prevent future problems.

There is also great value in reviewing the records as a whole to identify patterns and trends. What's happening in specific departments and across the facility? How does your injury and illness experience stack up against others in your industry? Is it clear that your employees understand the need to wear protective equipment and follow safety rules? Asking these questions and taking action in response to the answers can prevent future injuries and illnesses and improve a company's bottom line. Whenever OSHA visits a workplace, injury and illness records are the first thing that the inspectors want to see. These records provide a starting point for identifying where problems may lie. Of course, if a company has been tracking its experience and addressing these issues, what may be found is that the site has corrected hazards and resolved concerns.

A mishap is an undesired and unexpected event that results in injury requiring more than first aid, occupational illness to personnel, and/or damage to property of at least $1,000. Mishaps also include injuries or occupational illnesses resulting from repetitive stresses or exposures over a prolonged period of time. Mishaps resulting in damage to aircraft, space hardware, or ground support equipment that meet these criteria are included, as are test failures where the damage was unexpected or unplanned.

Mishaps and close calls can impact budget, schedule, and mission success. From the time of an initiating event until it becomes a closed case, each event passes through various steps and then recycles to become a case of interest. Mishaps, close calls, and hazards are all considered to be safety incidents. Some of these have already occurred, and others are potential incidents that we are working to the greatest extent possible to prevent.

Of the more than 50,000 incidents entered into NASA's Incident Reporting Information System (IRIS) since 1984, fewer than 200 have benefited from the indepth examination and Agency-wide exposure associated with investigation boards. The majority of the cases are Type C and D mishaps and close calls that go unnoticed unless they draw public attention. Some of the cases show precursors to catastrophic events; others indicate common problems across the Agency—minor mishaps that repeat themselves because they do not draw the same attention as dramatic incidents. The NASA Safety Center (NSC) recently developed cases of interest to address these concerns. Each month the NSC analyzes recent IRIS data and selects a mishap or close call that merits special attention. The incident might represent a significant unrecognized hazard or typify a common Agency problem. Selected cases are developed into cases-of-interest "knowledge bundles"; these narrate the incident, provide relevant background information, link to related NASA standards and training resources, and introduce discussion points and potential corrective actions.

4.0 POLICY

GRC policy requires prompt reporting and documenting of NASA mishaps (including mission failures and incidents) and close calls (including serious workplace hazards) that occur during any GRC operation. This chapter complements NASA Procedural Requirement (NPR) **8621.1B**, NASA Procedural Requirements for Mishap and Close Call Reporting, Investigating, and Recordkeeping, by providing additional details governing reporting and investigating mishaps and close calls to determine their causes, implement corrective actions, and document and disseminate lessons learned to prevent incidents.

5.0 RESPONSIBILITIES

5.1 Safety, Health and Environmental Division Chief or Designee

The Safety, Health and Environmental Division (SHED) Chief or designee

- Serves as the Center focal point for receiving all oral and written mishap reports and for notifying the Office of Safety and Mission Assurance, Safety and Assurance Requirements Division, at NASA Headquarters of such incidents in a timely manner
- Ensures that the policies and procedures for reporting, investigating, and documenting incidents and for taking corrective action are implemented at the Center
- Determines the type of investigation required and who will be involved in the investigation of a mishap.
- Shall monitor corrective action activities to determine if they were carried out according to the plan and shall report noncompliance
- Shall verify that all actions are correctly recorded in IRIS
- Is responsible for signing off that the mishap investigation and report are completed

SHED is responsible for verifying all corrective actions that were implemented.

5.2 Community and Media Relations Office

The Community and Media Relations Office is responsible for disseminating significant mishap information to the media and the general public. This office releases, as appropriate and in coordination with the Center Director, information to the press and media (i.e., potential hazards that may affect the public, interim reports, and the authorized mishap report).

5.3 Office of Human Capital Management

The Office of Human Capital Management establishes the requirements and procedures for notifying families when a mishap results in an injury or a fatality.

5.4 Procurement Division

The Procurement Division provides guidance to ensure that mishap reporting and investigation requirements are included in all GRC prime contracts and that these requirements are levied to each prime contractor's subcontracts.

5.5 Office of the Chief Counsel

The Office of the Chief Counsel

- Reviews issues with contractors
- Identifies conflicts of interest
- Ensures compliance with statutes such as the Freedom of Information Act and the Health Insurance Portability and Accountability Act (HIPAA)
- Develops nondisclosure agreements, if the investigating authority uses a contractor as administrative support, to analyze interview data or participate in interviews
- Provides legal advice and counsel as requested by the mishap investigation board (MIB) chair
- Attends the interview if the interviewee is accompanied by a lawyer during the interview process
- Reviews the final mishap report, identifies and marks sections that are not releasable to the public, and signs the reports

5.6 Occupational Medicine Services

Occupational Medicine Services

- Provides the medical or pathological information required to fulfill requirements of this chapter under the Privacy Act of 1974
- Provides any necessary occupational health and industrial hygiene support required by other GRC organizations to fulfill any of the responsibilities of this chapter
- Retains medical reports in confidential or privileged files to prevent inadvertent release
- Informs the employee's supervisor and the SHED Chief immediately of a fatality or of a suspected disabling injury or illness
- Notifies SHED and the employee's supervisor within 24 hours of the occurrence via IRIS when an employee has an injury or illness on the job

5.7 Incident Commander

The incident commander implements the procedures outlined in Glenn Procedural Requirements (GLPR) 1270.1, Center Mishap Preparedness and Contingency Plan, to coordinate rescue activities, mitigate hazards, and secure the mishap site.

5.8 Investigating Authority

The investigating authority shall conduct a comprehensive investigation within the defined scope of the appointment letter or appointment orders, generate the products indicated in paragraph 1.7 and Figure 5 of NPR **8621.1B**, prepare a mishap report, and sign the report.

5.9 Office of Protective Services

The Office of Protective Services supports the incident commander, SHED, and the interim response team (IRT) in securing the mishap site and impounding data, records, equipment, and facilities.

5.10 Interim Response Team

The IRT

- Preserves evidence, documents the scene, identifies witnesses, and collects debris
- Supports SHED in impounding data and collecting witness statements
- Advises the supervisor if drug testing should be initiated
- Provides all available mishap data and evidence to the investigating authority

5.11 Responsible Organization

The responsible organization

- Develops the corrective action plan (CAP)
- Implements the CAP
- Shall track the corrective action performance and completion in IRIS and update the status every 30 days
- Supports SHED as they verify that the CAP has been completed and effective
- Generates the lessons learned when tasked to do so by the appointing official

5.12 Supervisor

The supervisor is responsible for

- Ensuring immediate notification of emergency personnel (by dialing 911 at either Lewis Field or Plum Brook) and SHED

  Notification is required for any incident or close call resulting in a potential hazard or risk to personnel even though no personal injury or property damage may have occurred
- Investigating the incident to obtain causal information and then reporting such information to SHED; providing complete and accurate information in a timely manner by using the quick incident menu on the IRIS login page
- Taking necessary actions to correct hazards discovered during the investigation, including temporary measures to protect employees while building or equipment corrective action is implemented
- Improving on corrective action periodically
- Supporting MIBs as necessary
- Always reminding employees that reporting close calls and mishaps is necessary
- Reviewing mishap information; then reporting to employees lessons learned and corrective actions to be taken
- Monitoring the recovery of any employee with a lost-time injury; arranging for that employee to return to work on light or restricted duty as soon as possible
- Addressing any and all recommendations in the CAP

5.13 Employees

Employees are responsible for

- Reporting any incident that occurs during GRC operations if NASA, contractor, or construction contractor personnel; students; the public; and/or NASA property are involved
- Reporting immediately to their supervisors any mishaps, close calls, or other unsafe situations
- Providing incident information as requested
- Entering contractor mishaps and associated corrective actions into the IRIS database, updating the IRIS information as required, and tracking the incidents to closure

6.0 REQUIREMENTS

6.1 Reporting Mishaps and Close Calls (*NPR 8621.1B, 29 CFR 1904*)

Initial reporting requirements for mishaps and close calls are based on a preliminary, worst-case assessment of actual or potential severity and visibility. Refer to Appendix **A** for the definitions and terms.

6.1.1 Emergency Reporting, and Notification

In case of an emergency, please reference the Emergency Preparedness Plan.

6.1.2 NASA's Incident Reporting Information System Database

When an incident occurs, many people and organizations may have initial information about the case. Each NASA and contractor employee on NASA property, and each custodian of NASA assets elsewhere, is responsible for reporting mishaps.

All incidents shall be entered into the IRIS database within 24 hours of the event. As much information as is available at this time shall be entered by completing (at a minimum) all of the bold fields. When a safety incident occurs, it is important to gather details about the incident as quickly as possible so you can figure out what happened and prevent it from escalating or occurring again. The supervisor of the injured employee or the manager in charge of the area where damage or a hazardous material release or spill occurred should report the mishap. However, anyone who witnesses a mishap may report it using the quick incident menu on the IRIS login page. To report an incident anonymously, simply leave the "Recorded By: (Submitter)" field empty.

The quick incident report is, in most cases, where a safety incident record begins. Items on the quick incident menu are located outside of IRIS so that anyone can report incidents. The objective of the quick incident report is to make it as easy as possible for individuals to submit information to SHED as soon as possible without actually logging in to IRIS.

Once the quick incident report is saved, it is assigned an incident number. IRIS cases shall be continuously updated as new information becomes available and, at a minimum, at least every 30 days until the incident is closed by an IRIS user.

Figure **6.1** shows a screen capture of the quick incident menu. The quick incident report is accessed through this menu, which displays on the IRIS login screen. [kg1]This screen can be accessed by typing "IRIS" in the blank next to the word "Transport" on the top right of the NASA Web Intranet at Glenn (WING) homepage.

The "Click here to Track Report Status" option on the quick incident menu allows you to check the status of safety incidents already entered in the system. The quick incident status report shows whether or not the case is open, what types of investigations are underway, the report type, and a one- line description of the incident. The report tracking option is only available for safety incidents because of privacy considerations associated with injury and illness cases.

Figure 6.1.—Quick incident menu.

SHED is notified automatically once an incident record has been created,. After data have been entered into the system, SHED is responsible for reviewing each incident to eliminate multiple IRIS safety incidents created for a single mishap event.

6.1.3 Type A and B Mishaps and Other Highly Visible Mishaps and Close Calls

In order to facilitate the timely investigation of mishaps and close calls, and other notification requirements of NPR **8621.1B**, the responsible civil service or contractor program, project, or directorate organization shall, within 1 hour, provide initial notification by telephone or in person to SHED. Initial notification shall include the time, the location, a description of the event, the organization(s) involved in the event, and a preliminary worst-case estimate of the injuries or illness and/or a cost estimate of the damage resulting from the event.

NASA Headquarters notification must be acknowledged verbally, by e-mail, or by fax. Information to be reported includes the center name, location of the incident, time of the incident, number of fatalities (if known), number of hospitalized employees (if known), type of injury (if known), type of damage (if known), contact person, contact person's phone number, and a brief description of the mishap. In addition, within 24 hours, the SHED Chief or designee shall follow up the initial phone notification to NASA Headquarters by sending an electronic notification.

Within 8 hours of a work-related mishap involving the death of a Federal employee or the hospitalization for inpatient care of three or more employees (provided at least one is a Federal employee) within 30 workdays after the mishap, the SHED Chief or designee shall notify OSHA. After OSHA is notified, the Director of the Safety and Mission Assurance Directorate or the Director's designee shall inform NASA Headquarters that an oral report has been provided to OSHA. Contractors are responsible for reporting directly to OSHA when a mishap as described in this section involves contractor personnel only.

For Type A and B mishaps and for highly visible mishaps and close calls, a formal MIB (contractor and/or civil servant) shall be formed per Section **6.2**.

6.1.4 Type C and Type D Mishaps and Close Calls

Type C and D mishaps and close calls shall be reported within 1 hour to the responsible supervisor and the organizational (NASA or contractor) safety office and shall be investigated by the supervisor to determine the root cause(s), to develop and implement corrective actions to prevent recurrence, and to document and share lessons learned.

6.1.5 Drug Testing

If the mishap results in a fatality or a serious injury requiring immediate hospitalization, or substantial damage to property estimated to exceed $10,000, postaccident unsafe-practice drug testing may be warranted in accordance with NPR **3792.1**, Plan for a Drug-Free Workplace, and NPR **8715.3**, NASA General Safety Program Requirements.

6.1.6 Criminal Activity

If it is suspected that a reported mishap resulted from criminal activity, the Office of Inspector General and the Center's Office of the Chief Counsel shall be notified. Criminal activity, by definition, is not a mishap.

6.1.7 Reporting Days Away From Work (Civil Service and Contractor)

OSHA 29 CFR **1904**, Recording and Reporting Occupational Injuries and Illness, requires employers to record and report work-related fatalities, injuries, and illnesses. Recording or reporting a work-related injury, illness, or fatality does not mean that the employer or employee was at fault, that an OSHA rule was violated, or that the employee is eligible for workers' compensation or other benefits. OSHA injury and illness recordkeeping and workers' compensation are independent of each other.

Any recordable work-related injuries or illnesses that involve employee days away from work that result in long-term, permanent disability; restricted work; or a transfer to another job shall be reported by the supervisor to SHED via their notification e-mail address.

- A day away from work is defined as a full work day if it results from a nonfatal traumatic injury or from a nonfatal nontraumatic illness that causes one or more days away from work beyond the day or shift on which the event occurred.
- Restricted work activity is evaluated by looking at two components: time and job functions. If, because of a work-related injury or illness, an employee is unable to work the full shift he or she was scheduled to work, then that worker is considered to be on restricted work activity. For example, if the employee was scheduled to work an 8-hour day, but is only able to work 4 hours, the work activity is restricted. Job functions are those activities the employee regularly performs at least once per week.
- Most job transfers involve some type of restriction. Even if they do not, job transfers due to an injury or illness are recordable events. If an injured or ill employee is transferred to another job for half days, this is also a job transfer. If a permanent job transfer is made immediately, that is, on the day of the injury or illness, at least one day of restricted work activity must be recorded.

In calculating total days away from work, count the number of calender days that the employee was unable to work because of the work-related injury or illness, regardless of whether or not the employee would have been scheduled to work on those calendar days (e.g., weekends, holidays, or scheduled days off).

Workers' compensation provides benefits to employees who sustain job-related injuries or illnesses as a result of their employment with the Federal Government. Workers' compensation and safety have essentially the same goals and objectives. Employees must keep their supervisors and the Office of Workers' Compensation Programs advised of their status and must submit reports as required. Supervisors should advise employees of their responsibilities in filing a claim and about their rights and benefits, and should instruct them to use the quick incident menu on the IRIS login page to report all injuries promptly .

GRC follows the Federal agency recordkeeping and reporting requirements outlined in 29 CFR **1960**, Basic Program Elements for Federal Employee Occupational Safety and Health Programs and Related Matters, Subpart I, and in OSHA Publication 2014[n2]. SHED is responsible for maintaining the occupational injury and illness logs for civil

servants. Any work-related injury or illness is logged onto OSHA Form 300, Log of Work-Related Injuries and Illnesses.

SHED and workers' compensation ensure communication and reconcilation between the two systems. Our goal is to have a closed loop in managing cases that involve reporting days under a workplace restriction or lost time.

6.1.8 Other NASA Centers Performing Work at GRC

For work performed at GRC that is exclusively under the control of another (or other) NASA center(s) (i.e., without the participation of GRC employees or contractors), initial and followup mishap and close-call reporting will include notification of the host GRC program or project and SHED. This requirement is in addition to GRC's own mishap and close-call reporting and follow-on investigation, corrective action, and lessons-learned requirements.

Per NPR **8621.1B**, the centers should provide the following services:

- A courtesy investigation should be conducted by the center where the mishap occurred.
- The loss is attributed to the center that owned the person on their rolls.
- The corrective action for the hazard must come from the center where the hazard exists because the condition could also affect resident employees.
- Lessons learned must be of value to both centers or to all of NASA.

When SHED receives a notification of an incident of an employee who is on temporary duty at another center, they will e-mail the center about the incident as well as e-mail the IRIS Global Administrator to transfer the incident to that center or to associate the injury or illness incident with the safety incident.

6.1.9 Reporting Unsafe Activity or Condition

An unsafe and/or unhealthful condition or act is a safety or health hazard and/or hazardous act that could cause a close call or a mishap, although neither has occurred.

For simple unsafe and/or unhealthful conditions or acts that are within your control (such as wiping up a beverage spill), immediately eliminate it, if it can be done safely. If another person is performing an unsafe and/or unhealthful act, advise the person to reevaluate what they are doing. Otherwise, render the area safe if needed by temporary means such as barricades or other means of restricting access, if it can be done safely.

Whenever possible, unsafe and/or unhealthful conditions or acts shall be reported at the lowest local organizational level possible. The usual means of reporting an unsafe and/or unhealthful condition or act is to report it to the supervisor responsible for the affected area or to the facility manager if an unsafe and/or unhealthful condition or act is located in a common area.

There may be any number of reasons why an individual does not wish to report to the supervisor or facility manager, including fear of reprisal and not knowing who the responsible person or organization is. Anonymity can be maintained when creating a quick incident report—simply leave the "Recorded By: (Submitter)" field empty.

The report will be evaluated for validity (whether it is a safety or health issue and whether it is reasonably correctable.

GRC uses IRIS to record and document safety and health concerns and to track remediation and closure.

If you are not satisfied with the corrective actions taken (or lack thereof), you have the following additional options (in preferred order). Report the incident to the

- NASA Safety Reporting System (NSRS) online or by using forms that can be found in a designated area in each building.
- OSHA online or at 1–800–321–OSHA.

6.2 Mishap Investigations (*NPR 8621.1B*)

6.2.1 Investigations

Investigations shall be conducted to determine the actual or probable cause(s), to determine appropriate actions for avoiding recurrence, and to document the investigations and lessons learned so that others can learn from the findings. For mishap prevention, the facts learned shall be made available to and discussed with all appropriate employees.

Mishap investigations shall be conducted separately from any collateral investigation conducted to determine fault or the need for disciplinary action.

When directed by the SHED Chief or designee, the IRT will immediately deploy to the mishap site to initiate and support the investigation until a determination can be made as to the need for and selection of an investigating authority. The IRT will support rescue efforts and conduct initial investigation activities. The IRT shall preserve evidence and obtain witness statements for the MIB.

Depending on the severity of the incident, different groups of people may be involved in mishap investigations. At a minimum, the immediate supervisor of the injured party or area involved should be included, and SHED should assist. In addition, trained investigators chosen by SHED, union representatives, or the NASA Headquarters Investigation Board may be involved. The addition of other parties to the investigating committee does not relieve the supervisor of the responsibility for creating a quick incident report in a timely manner.

The procedures for investigating mishaps or close calls are defined in NPR **8621.1B** and will depend on the type of mishap (A, B, C, or D).

NASA Headquarters usually appoints the investigation team for Type A and B mishaps.

The responsibility for any investigation of Type C and D mishaps and close calls belongs to the supervisor of the individual affected and/or the work area or process involved.

There are 10[kg3] steps involved in all formal NASA mishap investigations (reference NPR **8621.1B** for specific details):

1. Prepare for the investigation.
2. Verify that the mishap site is secured, and ensure that any associated evidence is secured.
3. Gather physical evidence and facts.
4. Interview witnesses.
5. Review and analyze data.
6. Draw conclusions and document findings.
7. Generate a CAP.
8. Develop and document the CAP.
9. Ensure that the corrective action is implemented and effective.
10. Attach the completed mishap report to the IRIS case.

6.2.2 How to Investigate Incidents

All incidents require an investigation. When investigating an incident, find the causes and decide what actions should be taken to prevent the incident from happening again. The investigation should not be used to find fault, determine disciplinary action, or defend GRC from lawsuits. The purpose is only to prevent the incident from happening again.

- Start the investigation as soon as all emergencies are under control; ask SHED for assistance. GRC's Center Director may appoint an MIB to investigate the incident. If the Center Director appoints an MIB, stop the investigation, keep the incident scene and evidence secure, and cooperate with the MIB. If there is a question about whether or not an MIB should investigate the incident, contact the SHED Chief or designee.
- Refer any news media to the Community and Media Relations Office.
- Consult with experts to sample the incident scene or analyze the data.
- Interview witnesses. Keep witness statements confidential.
- Examine all evidence and analyze all incident data to the appropriate investigation level. Use the current version of NPR **8621.1B**.

- Document the results of the investigation and action plan or actions taken in IRIS. If an MIB is formed, submit its results to SHED.
- Have the facility or building manager concur on the proposed action if the incident involved any building, area, or hazardous materials.
- Document the lessons learned.
- Work the action plan and track it to closure in the IRIS database.

6.2.3 Mishap Investigation Boards

6.2.3.1 NASA Mishap Investigation Boards

NASA MIBs shall be formed for all Type A and B mishaps. MIBs also may be formed for other mishaps or close calls as deemed necessary by the Center Director or SHED Chief. MIB investigations shall be accomplished in accordance with the requirements of NPR **8621.1B**.

6.2.3.2 Contractor Mishap Investigation Boards

For NASA mishaps resulting from NASA contractor operations, the NASA board-appointing official, with the concurrence of the SHED Chief, may delay the formation of a separate NASA MIB (or activity) pending the review and acceptance of the contractor report. In this case, a letter signed by the NASA board-appointing official shall be sent to the contractor notifying them of NASA's intent to delay formation of a separate NASA MIB. NASA also retains the option of providing a Government representative for contractor-managed MIBs.

6.2.4 Mishap Investigation Board Reports

The MIB report shall contain a description of the structured analytical techniques used to identify causal factors, detailed documentation of mishap data, a discussion of root cause(s), and significant observations, findings, and recommendations. The report shall also include a proposed CAP to be used as a framework for further development and implementation. Witness statements shall be kept separate from the main portion of the report so that they can be easily separated and withheld from release and from distribution with the report. NPR **8621.1B** contains detailed information on report requirements and format. Within 75 workdays of the mishap or close call, the MIB shall submit the completed and signed mishap report to the appointing official. Once the report is approved, the MIB chair shall ensure that the SHED Chief or designee and IRIS Site (GRC) Administrator are sent the MIB report and the proposed CAP and shall distribute the final report in accordance with NPR **8621.1B**.

SHED is the official repository for all MIB reports and associated documentation. Witness statements and medical records shall be sealed and retained by the SHED Chief in a locked file and are not part of the distributed MIB report.

Contractor reports shall undergo a formal review by NASA, and once accepted, a formal letter of acceptance from the NASA board-appointing official will be provided to the contractor.

6.2.5 Nonboard Mishap Investigation Reports

An incident report documenting investigation results shall be entered into the IRIS database within 30 days of the event and include

- Identification of root cause(s)
- Significant observations
- Findings
- Recommendations

6.2.6 Nonboard Type C and D Mishap and Close-Call Investigations

All mishaps and close calls shall be investigated to identify the root cause(s) and other contributing cause(s). Within 30 working days of the mishap or close call, the results of the investigation shall be documented in the IRIS database.

6.2.6.1 Civil Service Nonboard Mishap and Close-Call Investigations

For mishaps or close calls with damage to property exclusively under the control of NASA civil service personnel or when an injury or illness to civil service personnel is involved, the NASA supervisor is responsible for conducting the investigation.

6.2.6.2 Contractor Nonboard Mishap and Close-Call Investigations

Contractor organizations are responsible for investigating their own non-MIB mishaps. For any mishaps or close calls (including environmental mishaps) that involve only contractor personnel or equipment as described in their contracts, the contractor supervisor is responsible for conducting the investigation. The contractor supervisor shall communicate any investigation results, corrective actions, root causes, and contributing factors to the designated contractor points of contact for that contract. The contractor points of contact will be required to enter the results of the investigation and track progress directly into IRIS.

SHED shall maintain involvement and oversight in the investigation and analysis and shall provide consultation on an as needed basis.

6.3 Investigation Timeline

From the initial report to concurrence with the final report, a typical mishap investigation timeline for Type A and B mishaps and other high-visibility events normally is not to exceed 145 days in accordance with NPR **8621.1B**. The following list provides a notional timeline for an investigation:

- Immediately to within 24 hours, the mishap is recorded using the quick incident menu on the IRIS login page, the mishap site is placed in a safe condition, the SHED Chief is notified, and the mishap type is determined.
- Within 48 hours of the mishap, an appointing official is determined based on the mishap types as defined in Appendix A. The appointing official appoints an investigating authority (an MIB, mishap investigation team (MIT), or a mishap investigator (MI)) based on the mishap type.
- Within 75 workdays of the mishap, the investigating authority (MIB, MIT, or MI) completes the investigation and prepares the mishap report for review and approval.
- Within 105 workdays of the mishap, the appointing official receives the mishap report for review and approval.
- Within 110 workdays of the mishap, the appointing official approves or rejects the mishap report.
- Within 120 workdays of the mishap, the appointing official and the Community and Media Relations Office authorize the report to be released to the public.
- Within 130 workdays of the mishap, the mishap report is distributed according to the mishap type.
- The mishap investigation timeline for Type C and D mishaps and low-visibility events is determined by the appointing official with concurrence from SHED. These investigations are to follow the sequence of steps for Type A and B mishaps, but with a different timeline.

6.4 Corrective Action

Corrective action(s) shall be determined and implemented to prevent the recurrence of similar events. Within 45 working days of the incident (or approval of the report in the case of MIB investigations), the responsible program or project, directorate organization, or contracting organization shall develop the CAP (or further develop the proposed CAP in the case of MIBs). The CAP shall provide corrective action(s) for the root cause(s) identified and for all other contributing factors to the mishap or close call. The CAP shall describe the corrective action(s) and identify (to the lowest level possible) the organization(s) responsible for implementation and the organization(s) responsible for ensuring completion of the action item(s). If there are no corrective actions that could reasonably be taken, a statement stating this shall be entered into the IRIS database in the Investigation Notes tab. The approved CAP shall be entered into the IRIS database in the Action Request tab. The action request is designed to document, assign, and track the effort required to complete activities and other scheduled or unscheduled closed-loop requirements. The responsible organization, contractor, and SHED are responsible for monitoring corrective action activities for mishaps and close calls and for determining if corrective actions have been carried out according to plan.

6.5 Lessons Learned from Mishaps and Close Calls

Knowledge and understanding are gained by experience. The experience may be positive, as in a successful test or mission, or negative, as in a mishap or failure. A lesson learned must be significant, in that it has a real or assumed impact on operations; valid, in that it is factually and technically correct; and applicable, in that it identifies a specific design, process, or decision that will reduce or eliminate the potential for failures and mishaps or will reinforce a positive result.

When the investigation is finished, decide if there are any lessons learned to share with other organizations that would prevent a similar safety, health, or environmental mishap.[kg4]

6.6 Training

All individual MIs, all ex officio members, and at least one voting member of each MIB or MIT shall have NASA Introduction to Mishap Investigations (or equivalent) and NASA Root Cause Analysis training. Training is required every 3 years to maintain currency in accordance with NPR **8621.1B**. The NSC is responsible for obtaining and scheduling these classes and offering them at least once a year.

- The ex officio and safety investigator shall complete Introduction to Mishap Investigations in SATERN, or an equivalent mishap investigation training course, and shall be familiar with this chapter of the Glenn Safety Manual.
- The human factors MI shall, at a minimum, be knowledgeable of the methods for identifying unsafe acts and errors; know the types of errors, factors causing and contributing to errors, and performance-shaping factors; know how to interview witnesses, analyze data, create timelines, perform fault tree analysis and barrier analysis, create event and causal factor trees, draw conclusions and generate recommendations to reduce human error or mitigate negative consequences of human actions; and have basic knowledge of physical and psychological processes and the limitations of humans.
- Upon assignment to a board, the investigating authority (MIB, MIT, or MI) shall receive onsite orientation training that includes (at a minimum) brief familiarization of roles and responsibilities, NASA policy and procedures, and a description of root cause analysis. The SATERN course Introduction to Mishap Investigations is used to supplement this training.
- The investigating authority (MIB, MIT, MI, and ex-officio) shall have knowledge of the NASA mishap investigation process; be able to collect and impound data, records, equipment, and facilities; and have the knowledge and skills to secure the site, preserve the mishap scene, interview witnesses, create time lines, document facts, generate fault trees, perform barrier analysis, integrate evidence, draw conclusions, generate recommendations, and generate mishap reports.
- Mishap investigation refresher training shall be provided to an MI when determined necessary. The NSC maintains the official list of people who have taken the training. SHED will coordinate this with the NSC.

6.7 Mishap and Incident Processing for Classified Projects

To be determined (TBD)

6.8 The following items are to be determined

- The supervisor of the summer intern or any other temporary employee entering GRC is responsible for the that student or employee while they are onsite at GRC.
- **Incidents during a contract transition**.—If an injury or Illness is sustained during a contract transition (prior to the actual contract start) TBD.
- **Transferring cases to the proper contractor or to a NASA directorate, division, or branch (TBD)**
- **Action request (corrective actions)**.—If an action request needs to be sent to another organization, it may not be clear who should receive it or even if it is permissible for a contractor to provide direction to the Government or another contractor (TBD).
- **Corrective actions**.—Notify SHED when the responsible organization no longer meets the remediation timeline for corrective actions (TBD).

- **SHED points of contact, contractor points of contact, and directorate and division points of contact**.—Responsibilities need to be defined. What is their role in regards to IRIS?
- **Timeline determination for Type C and D mishaps and close calls (TBD)**.—The approving authority determines the timeline.

7.0 RECORDS

GRC must keep the following records. Records are kept in a central location for easy access, and many records have backup copies stored at a Federal records-retention center. GRC must keep records back to the beginning of the fiscal year of the last OSHA Voluntary Protection Program review or longer if required by OSHA or NPR **1441.1**, NASA Records Retention Schedules. Any format that includes the pertinent information is acceptable unless noted otherwise. GRC must protect all safety and health records under the Privacy Act of 1974.

- OSHA Form 300A.—Maintained by SHED.

  This annual summary of work-related injuries and illnesses must follow OSHA publication OMB No. 1220–0029). Copies of the summary employee notices are posted from February 1 to April 30 of the year following the year covered by the form. NASA Headquarters obtains a copy from IRIS.

- Mishap board reports and records.—Maintained by SHED in IRIS.

  These reports include supporting evidence, transcripts, meeting agendas, minutes of board meetings, and other documentation of the investigation process, as well as copies of all data and records that are used in evaluation and analysis of the mishap; must follow NPR **8621.1B**, Chapter 6.

- NASA medical reports.—Maintained by Occupational Medicine Services and by Office of Human Capital Management; excluded from mishap report.
- Witness statements.—Maintained by SHED Chief and by Office of Human Capital Management; marked confidential and privileged; excluded from mishap report.
- Contractor medical reports and witness statements.—Maintained by contractor organization.
- CAPs.—Maintained by SHED in IRIS; follow NPR **8621.1B**, Chapter 6.
- Mishap reports.—Maintained by SHED; follow IRIS and NASA Form (NF) **1627**.
- Records to support Center-level trend analysis (such as minutes where trends are discussed and committee reports on trends are analyzed).—Maintained by SHED.

8.0 REFERENCES

Document number	Document name
NPR **8621.1B**	NASA Procedural Requirements for Mishap and Close Call Reporting, Investigating, and Recordkeeping.
NPR **1441.1**	NASA Records Retention Schedules.
NPR **3792.1**	Plan for a Drug-Free Workplace.
NPR **8715.3**	NASA General Safety Program Requirements.

APPENDIX A.—DEFINITIONS AND ACRONYMS

Building or area.—This could include parking lots, sidewalks, walkways, tunnels, gardens, steps, and docks.

Close call.—An occurrence or a condition of employee concern in which there is no injury or only minor injury requiring first aid and no significant equipment or property damage or mission failure (less than $1,000) but which possesses a potential to cause a mishap.

- For close calls, the worst-case potential mishap severity and probability of occurrence shall be assessed. The mere existence of a hazard does not constitute a close call: there must be an undesired and unexpected event that could cause a mishap or negative mission impact, even though neither occurred, or an event that has caused minor damage less than $1,000 or a minor injury requiring only first aid. For example, a sidewalk that is buckled and uneven is classified as a hazard by its mere existence. If someone was to trip or fall and escapes injury or only requires first aid, the event is classified as a close call if the event had significant potential to have been any type of mishap. All close calls shall be entered into the NASA Incident Reporting Information System (IRIS) database.

Code of Federal Regulations (CFR)

Corrective action.—Change to design processes, work instructions, workmanship practices, training, inspections, tests, procedures, specifications, drawings, tools, equipment, facilities, resources, or material that results in preventing, minimizing, or limiting the potential for recurrence of a mishap.

Corrective action plan (CAP).—Plan addressing each finding of an investigation with an emphasis on correcting the proximate and root causes of the mishap.

Exposure to hazardous substance.—Personnel exposure, or suspected exposure, to a hazardous substance exceeding allowable limits (quantity level or exposure time) shall be reported immediately to Occupational Medicine Services or, if after hours, to a licensed medical physician. All exposures shall go through Occupational Medicine Services or a licensed medical physician for medical evaluation and treatment. Confirmed exposures exceeding allowable limits shall be reported and documented as a mishap or close call.

Glenn Procedural Requirements (GLPR)

Glenn Research Center (GRC)

Health Insurance Portability and Accountability Act (HIPAA)

High-visibility mishaps and close calls.—Mishaps or close calls that may draw media attention, cause embarrassment to NASA, or other events deemed important by NASA management are considered to be high-visibility mishaps or close calls and may warrant a full NASA mishap investigation board

Incident Reporting Information System (IRIS).—A NASA mishap database that contains mishap reports and investigation data and that provides tools to track corrective action plans to completion, to submit status and closure data to NASA Headquarters, and to perform mishap trend analysis.

Incident.—Occurrence considered to be a mishap or close call.

Interim response team (IRT)

NASA mishaps.—Unplanned event that results in at least one of the following:

- Injury to non-NASA personnel caused by NASA operations. (Activities of construction projects are considered to be NASA operations. If a contractor has an incident at their own facilities, that is a non-NASA operation (e.g., incident during a maintenance action within the contractor-owned facilities).
- Damage to public or private property (including foreign property) caused by NASA operations or NASA-funded development or research projects.
- Occupational injury or occupational illness to NASA personnel.
- NASA mission failure before the scheduled completion of the planned primary mission.

- Destruction of, or damage to, NASA property except for a malfunction or failure of component parts that are normally subject to fair wear and tear and have a fixed useful life that is less than the fixed useful life of the complete system or unit of equipment, provided that the following are true: (1) there was adequate preventative maintenance, and (2) the malfunction or failure was the only damage and the sole action is to replace or repair that component. (An incident involving a construction project supporting a NASA project but using contractor-owned equipment, on NASA property constitutes a mishap and shall be reported into the Incident Reporting Information System (IRIS).)

Mishap investigation board (MIB)

Mishap investigation team (MIT)

Mishap investigator (MI)

NASA mishap.—Unplanned event that results in an injury to non-NASA personnel, caused by a NASA operation; damage to public or private property caused by NASA operations or NASA-funded development or research projects, occupational injury or illness to NASA personnel, NASA mission failure before scheduled completion of the planned primary mission, or destruction or damage to NASA property.

NASA Procedural Requirement (NPR)

NASA Safety Center (NSC)

Natural phenomenon mishaps.—Damage resulting from natural phenomena or acts of nature (e.g., flooding, hurricanes, tornados, lightning strikes, and wild fires), without human intervention, shall be classified as a NASA mishap by the organization owning or controlling the damaged or lost property. An assessment of all damages incurred shall be performed, and the cost of repairs and/or replacement shall be tracked and entered in the Incident Reporting Information System (IRIS) database. Natural phenomenon damage resulting from or made worse by failure of personnel to follow established procedures or standard practices, such as damage caused by animals as a result of personnel failing to properly secure and protect facilities and equipment, is not considered to be damage from natural phenomena, but it is still classified as a NASA mishap or close call.

Occupational illness.—For cases of occupational illness due to long-term exposure to hazards, such as asbestosis, silicosis, or hearing loss, the date of diagnosis by a licensed physician or the first official lost time day, whichever occurs first, is the date that shall be entered into the Incident Reporting Information System (IRIS) database.

Occupational Safety and Health Administration (OSHA)

Property damage.—Reported damage shall include the direct cost of replacement of damaged equipment and parts, plus labor, as well as the cost of cleanup and environmental investigation activity and restoration of property as required by environmental regulations. The reportable cost also includes replacement of any lost commodity (i.e., compressed gases, coolants, or propellants). In cases where replacement parts are available from salvaged or excess equipment at little or no cost to NASA, the actual costs of replacement parts may be used plus labor. The cost of the safety mishap investigation is not included.

Quick incident menu.—Employees may create a quick safety incident report or quick injury illness incident report without actually logging onto the Incident Reporting Information System (IRIS). The quick incident menu can be accessed from the Web Intranet at Glenn (WING) homepage under Glenn Workplace (or type “IRIS” in the blank next to the word “Transport” at the upper right of the WING homepage). This quick reporting capability helps to ensure that all incidents are entered into the system in a timely fashion. Once the initial report is saved, it is assigned an incident number and may be updated as more information becomes available by logging into the system.

Responsible organization.—Organization responsible for the activity, people, operation, or program where a mishap occurred or the lowest level organization where corrective actions will be implemented.

Root cause.—One of multiple factors (events or conditions that are organizational factors) that contributed to or created the proximate cause and subsequent undesired outcome and, if eliminated or modified, would have prevented the undesired outcome. Typically, multiple root causes contribute to an undesired outcome.

Safety, Health and Environmental Division (SHED)

To be determined (TBD)

Type A mishap.—Mishap resulting in one or more of the following: (1) an occupational injury or illness resulting in a fatality, a permanent total disability, or the hospitalization for inpatient care of three or more people within 30 workdays of the mishap; (2) a total direct cost of mission failure and property damage of $1 million or more; (3) a crewed aircraft hull loss; (4) an unexpected aircraft departure from controlled flight (except high-performance jet or test aircraft (such as the F–15, F–16, F/A–18, T–38, and T–34) when engaged in flight test activities).

Type B mishap.—A mishap that caused an occupational injury or illness that resulted in a permanent partial disability, the hospitalization for inpatient care of one or two people within 30 workdays of the mishap, or a total direct cost of mission failure and property damage of at least $250,000 but less than $1 million.

Type C mishap.—A mishap resulting in a nonfatal occupational injury or illness that caused any days away from work, restricted duty, or transfer to another job beyond the day or shift on which it occurred, or a total direct cost of mission failure and property damage of at least $25,000 but less than $250,000.

Type D mishap.—A mishap that caused any nonfatal OSHA recordable occupational injury and/or illness that does not meet the definition of a Type C mishap, or a total direct cost of mission failure and property damage of at least $1,000 but less than $25,000.

Contents

1.0 PURPOSE....2
2.0 APPLICABILITY....2
3.0 BACKGROUND....2
4.0 POLICY....2
5.0 RESPONSIBILITIES....2
5.1 Chief of SHeD and Area Safety Committee Chairperson....2
5.2 Supervisor....2
5.3 Employees....3
5.4 Emergency Dispatcher....3
6.0 REQUIREMENTS....3
6.1 Buddy System Levels of Control (*NPR 8715.3*)....3
6.1.1 Challenge-Check System....3
6.1.2 Lifeguard System....3
6.1.3 Two-Person System....3
6.1.4 No-One-Alone System....3
6.1.5 Frequented Area System....3
6.1.6 Communication-Check System....3
6.1.7 Other....3
6.2 Potentially Hazardous Buildings and Areas (*NPR 8715.3*)....3
6.3 Other Buildings and Areas (*NPR 8715.3*)....4
7.0 RECORDS....4
8.0 REFERENCES....4
APPENDIX A.—DEFINITIONS AND ACRONYMS....5

Chapter 22—The Glenn Buddy System

NOTE: *The current version of this chapter is maintained and approved by the Safety and Health Division (SHeD). The last revision date of this chapter was June 2012. The current version is maintained on the Glenn Research Center (GRC) intranet at http://smad-ext.grc.nasa.gov/shed/pub/gsm/gsm-manual.pdf. Approved by Chief of Safety and Health Division*

1.0 PURPOSE

This chapter specifies the requirements, procedures, and responsibilities for implementation of the Glenn Buddy System. It specifies the safety practices to be followed by employees working in potentially hazardous buildings or areas or by employees working alone in other buildings or areas at the Glenn Research Center (GRC) Lewis Field and Plum Brook Station (PBS).

2.0 APPLICABILITY

This chapter applies to

- All NASA GRC (Lewis Field and PBS) organizations and employees
- All GRC support service contractors, other NASA contractors, and non-NASA and non-contractor individuals present at GRC in accordance with the terms of their contracts or agreements with NASA
- Other Government organizations that are tenants at GRC or any other location under the Center's jurisdiction

3.0 BACKGROUND

The Glenn Buddy System was developed to address not only agency personnel-tracking requirements for persons participating in hazardous operations but also to account for employees who may be working alone. Such situations could arise due to work located in isolated areas or activities occurring outside normal working hours.

4.0 POLICY

NASA Procedural Requirement (NPR) 8715.3 specifies that a buddy system be used for employees working on activities classified as hazardous operations. The Center has expanded this policy to cover employees working alone in a nonhazardous environment.

5.0 RESPONSIBILITIES

The following individuals are responsible for implementing the Glenn Buddy System.

5.1 Chief of Safety and Health Division

The chief of the Safety and Health Division (SHeD) is responsible for establishment of the Glenn Buddy System as described in this chapter and for ensuring that the system is communicated to all employees.

5.2 Area Safety Committee Chair

Area safety committee chairs (ASCC) are responsible for issuing approved research or facilities operations permits and for ensuring that the appropriate Buddy System Level is identified in the conditions of operations.

5.3 Supervisor

Ensures that personnel use the buddy system whereby an adjacent or nearby person not directly exposed to the hazard serves as an observer to render assistance where the risk of injury is high (NPR 8715.3 Requirement 32327) . It is the supervisor's responsibility to prescribe the use, . and appropriate level of the Buddy System for all work assignments; wherein the normal work safety of employees under their jurisdictions could be compromised, unless the cognizant of the safety committee is otherwise established. The supervisor is responsible for reviewing the need for and use of some level of the Buddy System within their jurisdictions. Also, for ensuring that written instructions

are issued for work situations of a special or continuing nature. This should incorporate the job safety analysis or job hazard analysis process.

5.4 Employees

Employees are required to follow the Buddy System conditions identified on any safety permits that they are working under. Also, employees are required to follow the requirements in this chapter when working alone or when their work is considered a hazardous operation.

5.5 Emergency Dispatcher

The emergency dispatcher is required to follow chapter requirements involving employees working alone after hours.

6.0 REQUIREMENTS

6.1 Buddy System Levels of Control

The following definitions are required levels of control within the Buddy System in rank order from the highest degree of control to the lowest:

6.1.1 Challenge-Check System

Work procedure that requires a written challenge list and a verbal and/or written check-in answer (e.g., aircraft checklists).

6.1.2 Lifeguard System

Work procedure in which one or more persons are performing the work while at least one person who is not exposed to the potential hazard has only the work/responsibility of safeguarding the rest of the work party (e.g., radiation monitoring or jobs requiring lifelines and other similar special protective gear).

6.1.3 Two-Person System

Work situations in which each of two or more persons present must be capable of detecting incorrect or unauthorized procedures with respect to the task to be performed. In this system, persons are not required to have equal knowledge but only the capability of detecting incorrect or unauthorized procedures (e.g., in electrical substation operations). In addition to performing the assigned operations, each person is responsible for checking the safe operation of the other(s).

6.1.4 No-One-Alone System

Situations in which two or more persons, not necessarily having the same skills or training are working in the same area and checking with reasonable frequency on the continuing well-being of each other.

6.1.5 Frequented Area System

Situations in which persons work at individual tasks in areas frequented by other workers, each person in the area having the implied responsibility for checking at reasonable frequency the well-being of the others in the area (e.g., in shops, during research tests, and in construction areas).

6.1.6 Communication-Check System

Situation in which a communication check (e.g., visual, audible, radio, telephone, or television) is used in lieu of direct, close contact (e.g., in machinery operation surveillance, test operations, or patrols).

6.1.7 Other

Other equipment means subject to approval by the ASCC or SHeD.

6.2 Potentially Hazardous Buildings and Areas

If the Buddy System is to be implemented in continuous work situations or for one-time or special situations, written instructions shall be posted in a conspicuous place. Written instructions must always be used for work situations in which the challenge-check system is prescribed. Copies of written instructions shall be filed with SHeD at the time they are issued.

When verbal instructions are used to implement the Buddy System, the supervisor shall directly instruct each person on the work team; this responsibility may be assigned to the project, team, or equivalent leader if one is specifically appointed. Each member of the work team must be informed of the makeup of the team and the level of the Buddy System that is to be used.

If there is any doubt about which of the two levels of the buddy system is to be used, apply the most stringent requirements.

6.3 Other Buildings and Areas

In nonhazardous work areas, including office areas, it is preferred that employees not work alone. At times, however, it might be possible to have two or more employees working alone, depending upon the nature of the work to be performed. To ensure the physical welfare of employees working alone (i.e., having no personal contact with any other employee for a period of at least 1 hour), the following practice will be observed:

- When an employee is assigned to work alone, either during or after regular-duty hours, the supervisor will notify the emergency dispatcher at 3–2088 (GRC) or at 4–3226 (PBS) and will give the employee's name, location, and telephone number. The supervisor will thus assume initial responsibility for the well-being of the employee. The supervisor will then instruct the employee to call the emergency dispatcher hourly and on departure. The emergency dispatcher shall record the time of the call, the employee's name, and the employee's location. It is the employees' responsibility to inform the emergency dispatcher of any change in their physical location while they are working alone.
- If the supervisor is not present, the assigned employee will be responsible for providing the emergency dispatcher with the prescribed information at the time the employee begins solitary duty. During such duty, the employee must call in hourly and shall comply with other reporting requirements.
- The supervisor will encourage the use of the communication-check system for any employee who decides to remain at work alone after the regular shift has ended or to return to the Center during an off-shift period. Employees who elect to use the system must comply with the call-in requirements.
- The emergency dispatcher will conduct a telephone check or direct the security force to perform a physical check if the employee has not called in at the designated time (i.e., within 1 hour of previous call). This follow-up is to be no later than 15 minutes past that designated time.

6.0 Verification- Emergency dispatcher will conduct a telephone check or direct the security force to perform a physical check if the employee has not called in at the designated time.

7.0 RECORDS

- Challenge-Check System Written Instructions are maintained by SHED and the appropriate supervisor.
- C- 624 Form - After Hour Notification, maintained by Security Dispatch.

8.0 REFERENCES

Document number	Document name
NPR 8715.3	NASA Procedural Requirement: NASA General Safety Program Requirements
GSM Ch 10	Hazardous Operations
GSM Ch 1A	Glenn Safety Permit System
GSM Ch 33	Job Hazard Analysis

APPENDIX A.—DEFINITIONS AND ACRONYMS

Area safety committee chairperson (ASCC)

Glenn Research Center (GRC)

NASA Procedural Requirement (NPR)

Plum Brook Station (PBS)

Safety and Health Division (SHeD)

Contents

1.0 PURPOSE 2
2.0 APPLICABILITY 2
3.0 BACKGROUND 2
4.0 POLICY 2
5.0 RESPONSIBILITIES 2
5.1 Safety and Health Division (SHeD) 2
5.1.1 SHeD Facility Safety and Health Inspection Coordinator 3
5.1.2 SHeD Facility Safety and Health Inspector 3
5.2 Safety Committee Chairperson 4
5.3 Building Managers 4
5.4 Supervisors 4
5.5 Directorate and Organizational Safety Points of Contact (POCs) 4
5.6 Research and Test Personnel 4
5.7 Employees 5
6.0 REQUIREMENTS 5
6.1 SHeD Requirements (*NPR 8715.1 and 29 CFR 1960*) 5
6.2 Building Manager Requirements (*NPR 8715.1*) 7
6.3 Supervisor Requirements (*29 CFR 1960 and NPR 8715.1*) 7
6.4 Research and Test Personnel Requirements (*NPR 8715.1*) 7
6.5 Training 7
6.6 Certification Training 8
7.0 RECORDS 9
8.0 REFERENCES 9
APPENDIX A.—DEFINITIONS AND ACRONYMS 10
APPENDIX B.—SHEtrak FLOW CHART 13
APPENDIX C.—SHE INSPECTION REPORT 14

Chapter 24—Facility Safety and Health Inspection Program

***NOTE*:** *The current version of this chapter is maintained and approved by the Safety and Health Division (SHeD). The last revision date of this chapter was October 2012. The current version is located on the Glenn Research Center intranet at http://smad-ext.grc.nasa.gov/shed/pub/gsm/gsm-manual.pdf. Approved by Chief of Safety and Health Division.*

1.0 PURPOSE

This chapter provides requirements for the conduct of Facility Safety and Health Inspections at the Glenn Research Center's (GRC) Lewis Field (LF) and Plum Brook Station (PBS). This chapter identifies the types of facility safety and health inspections conducted at GRC, the frequency of these inspections, the composition of the inspection teams, and the responsibilities of the inspectors, management, and the GRC Safety and Health Division

2.0 APPLICABILITY

This chapter is applicable to all civil servant and contractor employees assigned to GRC sites and to any NASA-controlled, Government-owned facilities associated with GRC.

3.0 BACKGROUND

Facility Safety and Health Inspections and follow-up corrective actions are an important aspect of the GRC mishap prevention program. Inspections are the principal means by which management and safety and health personnel can identify hazardous conditions, unsafe work practices, and other occupational safety and health issues. The program includes notification of responsible facility personnel and follow-up actions to ensure that corrective actions are taken. Facility Safety and Health Inspections are a major effort to ensure compliance with applicable regulations of other Federal agencies exercising regulatory authority over NASA in specific areas (e.g., Department of Labor's Occupational Safety and Health Administration (OSHA) and the Nuclear Regulatory Commission).

4.0 POLICY

The Facility Safety and Health Inspection Program are led by SHeD at LF and the PBS. It consists of quarterly and annual inspections of buildings, substations, and cooling towers. Inspections are conducted by safety specialists trained to OSHA 30-hour general industry level or equivalent and fully conform to 29 (Code of Federal Regulations (CFR) 1960.2 standards. This activity conforms to the inspection standards required by NPR **8715.1** Chapter 4, Inspection and Abatement.

5.0 RESPONSIBILITIES

5.1 Safety and Health Division (SHeD)

SHeD is responsible for administering the Facility Safety and Health Inspection Program. SHeD conducts the program at LF and PBS. Implementation tasks include scheduling all formal inspections, coordinating inputs from inspection teams, maintaining the facility inspection database, issuing inspection violation notices to responsible individuals or organizations, tracking corrective action plans (CAPs) to closure, and issuing periodic reports on safety and health violations.

The Facility Safety and Health Inspection is a comprehensive, announced, and scheduled general inspection conducted annually and quarterly for all GRC facilities. Additional unannounced inspections will be conducted as needed, based on employee-reported concerns, SHeD investigation of safety and health issues, or changes in the facility operations or configuration. Specialty inspections that may be conducted singularly or as a part of the Facility Safety and Health Program Inspection include

- Industrial hygiene inspection
- High-voltage indoor inspection
- Chemical management inspection
- Health physics inspection

- Underground storage tank inspection
- Aboveground storage tank inspection
- Storm and sewer outfall inspection
- Ventilation and hood inspection
- Fire prevention inspection
- Confined space inspection
- Lifting device and equipment safety inspection
- Safety permit inspection
- Shop area safety inspection
- Lab area safety inspection
- Compressed gas cylinder system inspection
- Pressure system safety inspection
- Electrical safety inspection
- Building evacuation inspection
- Office area inspection

SHeD may use the Facility Safety and Health Inspection Program in conjunction with the Incident Reporting Information System (IRIS), SHeD helpline (216–433–8848) reports, Dr. Know, and NASA Safety Reporting System (NSRS) to assess, investigate, analyze, and record unsafe conditions or reports of unsafe conditions by issuing an inspection finding (IF) notice to the appropriate management individual or organization responsible for bringing the issue to closure. Such items will be tracked in the facility inspection database (SHEtrak).

SHeD administers the Center Safety, Health, and Environmental Tracking system (SHEtrak), which records, trends, and publishes the IFs and violations that may result from Facility Safety and Health Inspections.

5.1.1 SHeD Facility Safety and Health Inspection Coordinator

- Schedules annual and quarterly Facility Safety and Health Inspections for GRC facilities
- Ensures notification of facility managers, union representatives, additional inspectors, and organization safety points of contact (POCs) on the date and time of the annual or quarterly inspections
- Administers the GRC SHEtrak system.
- Produces a monthly report that communicates all recorded IFs and violations overdue for closure, SHeD-approved CAPs, or abatement plans (APs) to GRC Director of Safety and Mission Assurance
- Assists SHeD staff in preparing a Corrective and Preventive Action Reporting System (CPAR) entry for all IFs and violations overdue for closure, SHeD-approved CAPs, or APs
- Maintains a list of directorate and organizational safety and health POCs and coordinates organizational safety and health issues with the POCs

5.1.2 SHeD Facility Safety and Health Inspector

- Conducts annual or quarterly Facility Safety and Health Inspections of their assigned facilities
- Records inspection results in the SHEtrak system
- Conducts follow-up inspections on findings requested to be closed
- Conducts follow-up inspections following the due date for findings requested abated or corrected per terms of the CAP or the AP recorded in SHEtrak

- Recommends stoppage of all activity that is immediately hazardous to life and property; records the finding to be a Risk Level 1—Immediate Danger, and assigns an immediate correction date in SHEtrak
- Assesses the risk of each IF and assign a Risk Level of 1—Immediate Danger; 2—Serious (less than imminent); 3—Routine (less than serious)
- Conducts occasional informal and unannounced inspections of each assigned facility as needed to determine the facilities general safety, health, and environmental conditions between the formal annual and quarterly inspections; records any findings in SHEtrak for action
- Monitors the activity of each assigned facility to determine the potential safety, health, and environmental risks that may require informal inspection

5.2 Safety Committee Chairperson

Safety committees shall conduct third-party reviews of all proposed installations, modifications, and operations in their assigned areas, to ensure that all systems meet minimum safety standards. Safety committee consideration of new permit requests, renewal requests, and change requests include walkthroughs of the permit areas. When safety or health concerns are observed during facility inspections they shall be brought to the attention of the SHeD or a SHeD Facility Safety and Health Inspector who shall investigate and issue an IF and/or violation notice to the appropriate management individual or organization responsible for correcting the finding, developing a CAP, or developing an AP to remedy the finding. All such items will be tracked in the facility inspection database (SHEtrak).

5.3 Building Managers

Building managers are an integral part of the Facility Safety and Health Inspection Program. As part of the inspection team, the building manager provides detailed knowledge of operations in the facility to aid the inspection team. The building manager is requested to accompany the inspection team for all formal safety and health inspections. Scheduled formal inspections will not be conducted without the participation of the building manager or the building manager's alternate or designated representative. Building managers are encouraged to make periodic inspections of their areas or facilities. When safety or health concerns are observed or reported, they shall immediately be brought to the attention of the SHED or a SHED Facility Safety and Health Inspector.

5.4 Supervisors

Supervisors are encouraged to make periodic inspections of their areas or facilities. When safety or health concerns are observed or reported, they shall immediately be brought to the attention of SHeD or a SHeD Facility Safety and Health Inspector.

5.5 Directorate and Organizational Safety Points of Contact (POCs)

Directorate and Organizational POCs for safety and health concerns will serve as a Directorate or Divisional focal point for safety and health concerns noted in areas under the control of his or her Directorate or Division. Any organization can designate a POC; however, it is recommended that all Directorates appoint a POC and that any Division with significant manufacturing, industrial, laboratory, warehouse, or facility maintenance functions assign a Safety and Health POC.

The Safety and Health POC

- Should monitor their organizations performance on Facility Safety and Health Inspection reports
- Consults with SHeD to formulate an appropriate organizational safety and health performance strategy to correct, abate, or improve organizational safety and health performance
- Assists SHeD Facility Safety and Health Inspectors in assigning IFs to appropriate individuals

5.6 Research and Test Personnel

Research and test personnel are encouraged to make periodic informal inspections of their areas or facilities to ensure compliance with safety permits and to assess the safety and health of their workplace. When safety or health concerns are observed or reported, the concern shall immediately be brought to the attention of the SHeD or a SHeD Facility Safety and Health Inspector, reported in IRIS, communicated to the EHS helpline (216–433–8848), Dr Know, or reported via NSRS.

GRC SHeD provides a list for all contacts and programs.

5.7 Employees

Employees are encouraged to notice and report workplace safety and health issues. When safety or health concerns are observed or reported, the concern shall immediately be brought to the attention of the SHeD or a SHeD Facility Safety and Health Inspector, reported in IRIS, communicated to the EHSHelpline (3–8848), or reported via NSRS.

GRC SHeD provides a list for all contacts and programs.

6.0 REQUIREMENTS

The GRC Facility Safety and Health Inspection Program provides a level of workplace inspection and abatement that meets or exceeds the objectives 29 CFR 1960.2 OSHA and NPR **8715.1,** NASA Occupational Safety and Health Programs.

6.0 Verification of compliance with these requirements is done by SHeD during periodic evaluation and audits.

6.1 SHeD Requirements (*NPR 8715.1 and 29 CFR 1960*)

- SHeD shall establish a formal schedule of inspections for all operations and facilities. All active areas and operations of each establishment shall be inspected at least annually. More frequent inspections shall be conducted in all establishments where SHeD determines that there is an increased risk of accident, injury, or illness due to the hazardous nature of the workplace.
- SHeD shall annually inspect any facility, structure, operation, vehicle, or equipment that is in an inactive status. Prior to reactivation, the facility, structure, vehicle, operation, or equipment shall undergo a thorough inspection to identify potential hazards.
- SHeD shall conduct unannounced inspections, including follow-up inspections, to ensure the identification and abatement of hazardous conditions and to verify the implementation of CAPs and APs.
- SHeD shall conduct additional (nonscheduled) inspections at the request of safety and health committees, supervisors, employees or their representatives, or upon notice of an unsafe or unhealthful condition.
- SHeD shall only conduct scheduled and unannounced inspections with inspectors who meet the Office of Personnel Management standards for the following occupations: Safety and Occupational Health Manager/Specialist GS–018, Safety Engineer GS–803, Fire Prevention Engineer GS–804, Industrial Hygienist GS–690, Fire Protection and Prevention Specialist/Marshal GS–081, Health Physicist GS–1306, Occupational Medicine Physician GS–602, Occupational Health Nurse GS–610, Safety Technician GS–019, Physical Science Technician GS–1311, Environmental Health Technician GS–699, Air Safety Investigation Officer GS–1815, Aviation Safety Specialist GS–1825, Chemist GS–1320, Health Technician GS–645, Highway Safety Manager GS–2125, General Health Scientist GS–601, Physician`s Assistant GS–603, or Sanitarian GS–688.
- SHeD shall ensure that inspectors have sufficient documented training and experience in safety and health necessary for the recognition, evaluation, and general abatement of suggestions and procedures of health and safety hazards.
- SHeD shall provide the proper support equipment necessary to conduct a thorough inspection of the facility, operation, or equipment being inspected.
- SHeD shall issue all IFs through SHEtrak as an equivalent document to the Notice of Unsafe or Unhealthful Condition (NASA Form (NF) **1390**) utilizing the process illustrated in Appendix B.
- SHeD shall assign a risk level to each inspection checklist item to incorporate the inspection checklist item probability and severity determination. Risk levels shall be
    - **Risk Level 1—Imminent danger**.—The existence of any condition or activity that can reasonability be expected to have a high probability to cause death or serious physical harm if not immediately corrected.

(29 CFR 1903.14(e)(14)). These conditions are to be placed in a safe condition immediately or the employees evacuated from the area and the work operations ended. These conditions are to be corrected not later than 3 calendar days or a CAP submitted to SHeD.

Examples include, but are not limited to, the following

- Employees working on, near or within close proximity to energized electrical parts without an Energized Electrical Work Permit or unguarded moving mechanical parts
- Employees working on elevated surfaces above 6 ft without the use of a fall protection system
- Employees working within close proximity to unguarded floor openings
- Leaking toxic or hazardous gases
- Employees performing any activity that is considered extremely unsafe and unacceptable

o **Risk Level 2—Serious (less than imminent)**.—The existence of any condition or activity that can reasonability be expected to have a substantial probability to cause death or serious physical harm if not corrected within a specified time. These conditions do not require immediate correction, but are deemed as "priority" and are required to be corrected as soon as possible. These conditions are to be corrected within 20 calendar days or a CAP shall be submitted to SHeD.

Examples include, but are not limited to, the following

- Exposed energized electrical parts or unguarded moving mechanical parts, but no employee is working on, near or within close proximity
- Inoperative fire alarm system in a building without an effective evacuation plan
- Electrical outlets in damp or wet locations not equipped with ground fault circuit interrupter (GFCI)

o **Risk Level 3—Routine (less than serious)**.—The existence of any condition or activity that can reasonability be expected to have a slight chance or low probability to injury or affect personnel safety. These conditions are to be corrected within 30 calendar days or an AP shall be submitted to SHeD.

Examples include, but are not limited to, the following

- Portable appliance does not have a permit
- Portable fire extinguisher, emergency eyewash station, or automated external defibrillator (AED) not inspected as required
- Improper lighting in workarea
- Electrical panel not correctly labeled

- SHeD Inspector shall assign a hazard level to each IF that communicates the severity of the hazard to employees when the IF is posted in the workplace.

  o **Imminent danger**.—Hazardous condition may cause death, permanent disabling, or fatal injury to personnel and/or loss of facilities, major systems, or associated hardware. This type of violation shall be corrected immediately. The area supervisor should be contacted and advised that operations shall cease and employees evacuated from the area until the situation is corrected. Supervisor should direct corrective actions to eliminate or lower the hazardous condition.

  o **High**.—Hazardous condition may cause severe injury or occupational illness, and/or major damage to facilities, systems, or flight hardware. Severe injury or illness may likely result in the hospitalization and/or permanent disability or likely to limit the personnel in his/her job performance.

  o **Medium**.—Hazardous condition may cause minor injury or occupational illness, and/or marginal damage to facilities, systems, or equipment.

- **Low**.—Conditions that may cause first aid injuries or occupational illness, and/or minimal damage to facilities, systems, or equipment. This may not affect personnel safety, but is a violation of specific criteria.

- SHeD shall review and approve CAPs for all IFs not corrected in the assigned time period based on the finding risk level.
- SHeD shall review and approve APs for all findings that cannot be corrected within 30 calendar days of the date of issue.
- SHeD shall report imminent danger conditions to the supervisor of the area who will order employees removed from exposure to the imminent danger condition and begin abatement of the imminent danger condition.
- SHeD shall issue IFs not later than 15 days after completion of the inspection for safety violations or not later than 30 calendar days for health violations. If the IF cannot be issued within the prescribed time period; reasons for the delay must be documented. The corrective action completion date is started upon the SHEtrak release date of the IF. The SHeD goal is to issue the IF thru SHEtrak within 3 working days following the inspection for both safety and health findings.
- SHeD shall ensure that a copy of the IF is filed and retained for a period of 5 years after abatement and made available to OSHA or National Institute of Occupational Safety and Health (NIOSH) officials upon request (electronic versions are acceptable for recordkeeping purposes).

6.2 Building Manager Requirements (*NPR 8715.1*)

- Building managers shall post all inspection finding reports or OSHA citations at or near the workarea involved. Usually this can be accomplished by posting the IFs on the building bulletin board. Each citation must remain posted until the violation has been corrected, or for three working days, whichever is longer. Appendix C provides a sample of the inspection finding report. Additionally, building managers post correction or abatement verification documents if requested by SHED as part of the CAP or AP.
- Building managers shall address all IFs assigned to them or their organization.
- Building managers shall address IFs that cannot be closed within the time allowed by the assigned risk level with a SHeD-approved CAP or an AP.

6.3 Supervisor Requirements (*29 CFR 1960 and NPR 8715.1*)

- Supervisors shall address all IFs assigned to them or their organization.
- Supervisors shall address IFs that cannot be closed within the time allowed by the assigned risk level with a SHeD-approved CAP or an AP.
- Upon discovery or being informed of an IF rated at the risk level of imminent danger by a Facility Safety and Health Inspector, the supervisor in charge of the establishment, or a person empowered to act for that official, shall undertake immediate abatement, or cease operations and withdraw exposed personnel who are not necessary for abating an imminent danger condition. In the event the supervisor in charge of the establishment needs assistance to undertake full abatement, that official shall promptly contact the responsible Center officials who shall assist in the abatement effort (i.e., GRC staff members capable of responding and resourcing an immediate correction/abatement of the hazardous condition).

6.4 Research and Test Personnel Requirements (*NPR 8715.1*)

- Research and test personnel shall address all IFs assigned to them.
- Research and test personnel shall address IFs that cannot be closed within the time allowed by the assigned risk level with a SHeD-approved CAP or an AP.

6.5 Training

The System for Administration, Training, and Educational Resources for NASA (SATERN) lists multiple online and onsite safety, health and environmental management courses applicable to the Facility Safety and Health Inspection Program. Supervisors, research and test staff, and Safety and Health POCs are encouraged to utilize these training

resources to gain an appropriate safety, health, and environmental awareness in a broad range of areas in addition to gaining specialized knowledge in the areas most applicable to their workplaces. The ability to notice and report safety, health, and environmental management deficiencies improves the quality of the workplace, reduces accidents, and IFs.

- Nonexclusive list of SHeD-recommended training for Facility Safety and Health Inspectors and building managers
    - OSHA 30-hour General Industry Course (10-hour course for building managers)
    - OSHA 40-hour Hazardous Waste Operations and Emergency Response (8-hour awareness course for building managers)
    - NASA Safety Training Center Lab Safety
    - NASA Safety Training Center Shop Safety
    - NASA Safety Training Center Electrical Safety
    - NASA Safety Training Center Machine Guarding
    - NASA Safety Training Center Cryogenics Safety
    - NASA Safety Training Center Hand and Power Tools
    - NASA Safety Training Center Flexible Hose Safety
    - NASA Safety Training Center Safety in High Pressure Operations
    - NASA Safety Training Center Compressed Gas Trailer Safety
    - NASA Safety Training Center Compressed Gas Cylinder Safety
    - GRC Laboratory and Local Exhaust Ventilation Function and Safety
    - GRC Indoor Environmental Quality Awareness
    - OSHA Regulated Chemicals Training
    - GRC Lock Out/Tag Out
    - GRC Respiratory Protection
    - GRC Hearing Protection
    - GRC Personal Protective Equipment (PPE)
    - GRC Lifting Devices and Equipment Operations Course
    - GRC Confined Space Entry GRC Electrical Safety
    - GRC Fire Extinguisher Training
    - GRC AED/cardiopulmonary resuscitation (CPR) Training
    - NASA SMA Technical Excellence Program (STEP), Operational Safety, Level 1–4

6.6 Certification Training

Training leading to professional certification in a safety or occupational health field is highly encouraged for Facility Safety and Health Inspectors. Relevant professional certifications include

- Certified Industrial Hygienist (CIH)
- Certified Safety Professional (CSP)
- Associated Certified Safety Professional (ACSP)
- Occupational Health and Safety Technologist (OHST)
- International Code Council (ICC) or National Fire Protection Association (NFPA) Certified Fire Inspector

7.0 RECORDS

All facility safety and health IFs, CAP, or AP records are maintained by SHeD for 5 years. The SHeD Facility Inspection Database contains records from 2000 to 2010. Inspection records from 2010 onward are maintained in the SHeD Safety, Health and Environmental Tracking System (SHEtrak).

Training records.—Maintained by the Human Capital Development Branch.

8.0 REFERENCES

Document number	Document name
29 CFR **1960**	Occupational Safety and Health Administration, Basic Program Elements for Federal Employees, OSHA
29 CFR 1910	Occupational Safety and Health Administration, General Industry Health and Safety Standards
29 CFR 1926	Occupational Safety and Health Administration, Construction Health and Safety Standards
GLM–QS–1700.1	NASA Glenn Safety Manual, Chapter **1A**—Safety Permit System
GLM–QS–1700.1	NASA Glenn Safety Manual, Chapter **17**—Construction Safety
GLM–QS–1700.1	NASA Glenn Safety Manual, Chapter **21**—Mishap and Close Call Reporting, Investigating and Record Keeping
GLM–QS–1700.1	NASA Glenn Safety Manual, Chapter **31**—Fire Protection
NPR **1800.1C**	NASA Procedural Requirement, NASA Occupational Health Program Procedures
NPR **8715.1**	NASA Procedural Requirement, NASA Occupational Safety and Health Programs w/Change 3 (02/13/06)
NPR **8715.3C**	NASA Procedural Requirement, NASA General Safety Program Requirements (w/Change 4 dated 7/20/09)
NPD **8700.1E**	NASA Procedural Requirement, NASA Policy for Safety and Mission Success
NPR **8705.6A**	NASA Procedural Requirement, Safety and Mission Assurance Audits, Reviews, and Assessments

APPENDIX A.—DEFINITIONS AND ACRONYMS

Abatement.—Action to correct the condition of an inspection finding (IF) that cannot be closed or corrected within 30 days of the date of issue for an IF.

Abatement plan (AP).—Plan to implement the abatement to the conditions causing an inspection finding (IF). APs are submitted by the assignee to SHeD who reviews and approves or rejects the AP. APs are used for any corrective action plan (CAP) to exceed 30 calendar days from the issue date of the IF. If the condition can be corrected within 30 calendar days, then a CAP is used. A copy of the AP shall be posted in the work area associated with the IF.

Area supervisor.—Supervisor responsible of the area of the facility being inspected.

Assignee.—Individual who is designated to receive and correct, write the CAP or the AP for an IF. May be any employee; however, usually will be a supervisor, building manager, or directorate/organizational point of contact.

Associated Certified Safety Professional (ACSP)

Automated external defibrillator (AED)

Building manager.—Facilities Division staff member that handles inspection findings for common areas of a building, also assists in reassigning to the correct organization.

Cardiopulmonary resuscitation (CPR)

Certified Industrial Hygienist (CIH)

Certified Safety Professional (CSP)

Closure.—To correct the conditions causing the IF. Closure is requested by the assignee and SHeD accepts or rejects the request. If accepted, SHeD enters a closure action in SHETrak.

Code of Federal Regulations (CFR)

Corrective action.—Activity that fixes the condition causing the IF.

Corrective action plan (CAP).—Plan to correct the conditions of the IF. The assignee submits a CAP to SHeD who accepts or rejects the CAP based on the sufficiency of the plan to correct the condition causing IF. A CAP is needed anytime the assignee cannot correct the IF within the time allowed by the risk level. The CAP must correct the finding not more than 30 calendar days after the issue of the IF. If this cannot be done; then the assignee must submit an AP instead of the CAP.

Corrective and Preventive Action Reporting System (CPAR)

Directorate/Organizational Safety POC.—Focal point for safety and health concerns noted during inspections in areas under the control of his/her directorate/organization.

Facility Safety and Health Inspection.—Annual or quarterly inspection conducted by SHeD on all GRC facilities to assess the safety and health of the GRC workplace. Includes prior notification of labor union representatives, building managers, and area supervisors who are invited to accompany the inspection.

First aid.—First aid is any one-time treatment, and follow-up visit for the purpose of observation, of minor scratches, cuts, burns, splinters, and so forth, which do not ordinarily require medical care. Such one-time treatment, and follow-up visit for the purpose of observation, is considered first aid even though provided by a physician or registered professional personnel.

Follow-up inspection.—Inspection conducted by SHeD to check on the progress or validate the CAP or AP prior to closure of the IF by SHeD.

Formal inspection.—Inspection in which an inspection checklist and/or the Facility Safety and Health Inspection process is followed.

Glenn Research Center (GRC)

Ground fault circuit interrupter (GFCI)

Hazard level.—Inspector will assess the severity of the hazard associated with an IF by categorizing the safety or health condition causing the IF to be of imminent danger, high, medium, or low. This assessment is included in the Safety, Health and Environmental Report.

Incident Reporting Information System (IRIS)

Informal inspection.—Inspection that includes only a limited selection of checklist items selected by the inspector in order to investigate a safety or health complaint, conduct a follow-up inspection, or to conduct an inspection for which no checklist exists, but will require observing the safety or health conditions and researching the appropriate regulations and standards to determine the probability and severity of a suspected unsafe or unhealthy condition. Also includes on the spot observations in which no inspection was intended, but a safety, health, or environmental issue is observed and an IF should be issued.

Inspection.—SHeD inspector assessment of any facility, structure, operation, vehicle, or equipment in order to determine existence of potential workplace hazards or safety, health, and environmental regulatory and standards compliance.

Inspection checklist.—List of safety, health, and environmental items requiring assessment by a SHeD inspector.

Inspection finding (IF).—Identification of any workplace condition causing a potential workplace hazard or safety, health, and environmental regulatory and standards noncompliance.

Investigation.—SHeD inspection and assessment of a reported or suspected workplace safety, health, or environmental condition that may be hazardous or causing a regulatory or standards noncompliance. This definition is only applicable to Facility Safety and Health Inspection Program; other programs conduct investigations by different means and purposes. **Lewis Field (LF)**

NASA Safety Reporting System (NSRS)

National Aeronautics and Space Administration (NASA)

National Fire Protection Association (NFPA)

Occupational Health and Safety Technologist (OHST)

Occupational Safety and Health Administration (OSHA)

Personal protective equipment (PPE)

Plum Brook Station (PBS)

Point of contact (POC)

Risk level.—Probability and severity determination prescribed by SHeD to an inspection checklist item

Risk level 1.—Imminent danger; condition requires correcting within the timeframe of immediately to 3 days as listed on the inspection checklist.

Risk level 2.—Serious (less than imminent) requires correcting within 20 calendar days.

Risk level 3.—Routine (less than serious) requires correcting within 30 calendar days.

Safety and Health Division (SHeD)

Safety and Health Division Organizational Code (QS)

SHeD Rep.—Safety and Health Division point of contact that is responsible for approving the closure of findings and abatement plans, can also conduct inspections and enter them into SHEtrak. **Safety, Health and Environmental Report (SHE Report)**.—Report of IFs posted in the workplace until the IFs are corrected.

Safety, Health and Environmental Tracking System (SHEtrak).—Database and system used to record and track inspections, IFs, assignment of findings, closures, CAPs, and APs.

Shall.—Indicates a requirement that is necessary to meet the standards of protection currently in effect.

Should.—Indicates a recommendation that can be applicable.

Safety and Mission Assurance Technical Excellence Program (STEP)

Specialty inspection.—Additional SHeD inspections that may be conducted singularly or as a part of the Facility Safety and Health Program Inspection.

System for Administration, Training, and Educational Resources for NASA (SATERN)

Violation.—A safety, health, or environmental condition that does not conform to OSHA, NPR, or other governing industry standards and regulations. Recorded as an IF in SHETrak.

APPENDIX B.—SHEtrak FLOW CHART

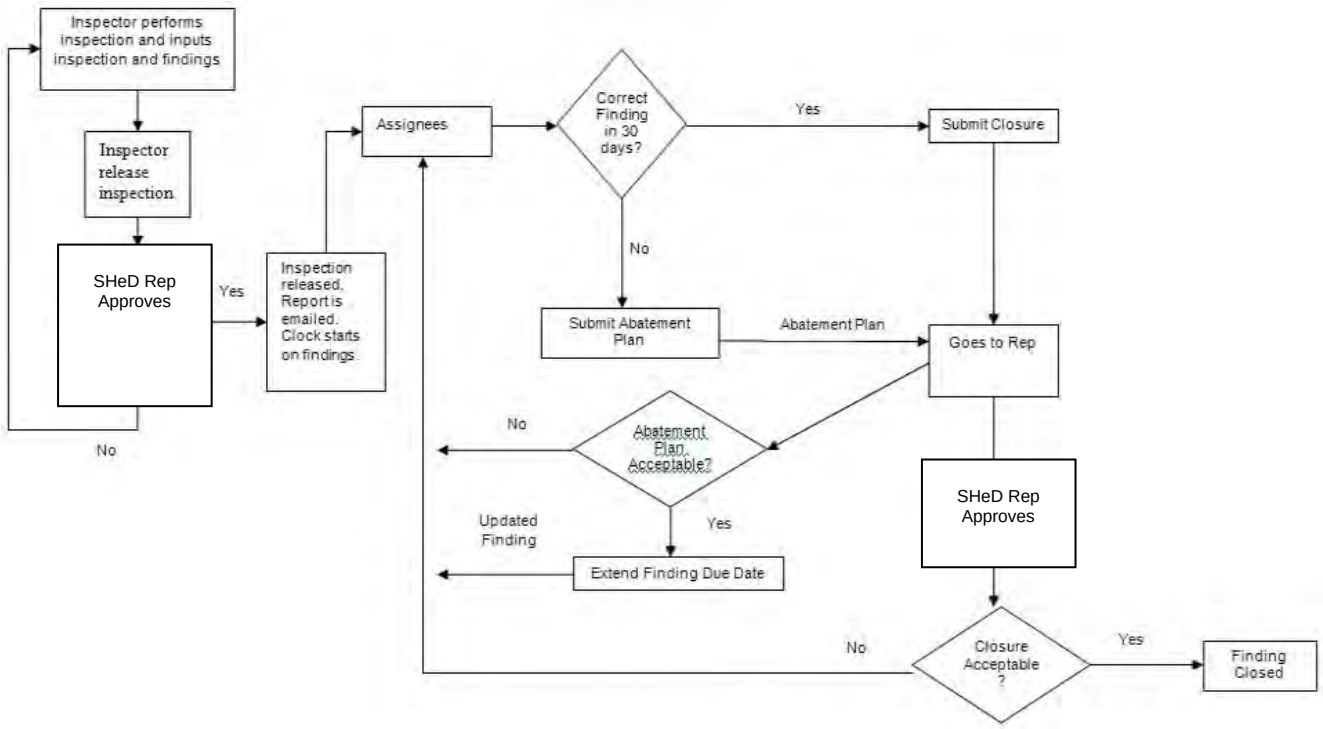

APPENDIX C.—SHE INSPECTION REPORT

Facilities Safety and Health Inspection of building 1213 was performed on 02/16/2010 thru 02/16/2010
by Inspectors: John Smith
Questions? Contact the inspectors listed below.

Finding identification	Room and location	Violation	Reference	Recommended action	Interim action	Status/ due date	Assignee	Hazard level
35077	Room: Location: chemical room	Exposed wires, frayed or spliced cords, or deteriorated insulation plug and power strip under desk in chemical testing room has exposed wires.	NEC 110–7 NEC 400–9 1910.305(g)(2)(i)	Protect exposed wires, repair or replace frayed or spliced cords or deteriorated insulation		Open	Building manager, Ron Howard	Low
FCo1	Room: Location: 340	Oily rags not stored in covered metal container.	29 CFR 1910.6	Store in covered metal container		Open	Building manager, Ron Howard	Low
35079	Room: Location: 122	Paint peeling from wall.		Isolate area and limit access	Testing paint	Open	Building manager, Robert Vanek	Medium
35080	Room: Location: Hallway 2nd floor	CO_2 extinguisher found to be out of hydrostatic testing.		Replaced with tested unit		Closed	Building manager, Ron Howard	Low

Contents

1.0 PURPOSE 2
2.0 APPLICABILITY 2
3.0 BACKGROUND 2
4.0 POLICY 2
5.0 RESPONSIBILITIES 3
5.1 Requester 3
5.2 Safety Committee 3
5.3 Safety and Health Division 3
5.4 Facilities Division (FD) 4
5.5 Building Manager 4
6.0 REQUIREMENTS 4
6.1 Assess the Need for a Detection System 4
6.2 SHeD Evaluation 4
6.2.1 Need for Detection System 4
6.2.2 Engineering Controls 5
6.2.3 Type of Detection System 5
6.2.4 Alarm Settings 5
6.2.5 Alarm Response 5
6.2.6 Sensor, Alarm, and Warning Light Location 5
6.2.7 Warning Signs and Barricades 5
6.2.8 Evacuation Procedures 5
6.2.9 Condition of Operation on the Safety Permit 5
6.3 Design of the Detection System 5
6.4 Installation of the Detection System 6
6.5 Changes to a Detection System 6
6.6 Calibration and Maintenance of the Detection System 6
6.7 Detection System Deactivation 6
7.0 RECORDS 6
8.0 REFERENCES 6
APPENDIX A .—DEFINITIONS AND ACRONYMS 8
APPENDIX B .—DETECTION SYSTEM PROCESS 9
APPENDIX C .—SUPPORTING DOCUMENTATION FOR EValuating the NEED FOR A DETECTION SYSTEM 10
APPENDIX D .—REQUEST FOR A DETECTION SYSTEM 11

List of Tables

Table 6.1.—Alarm Settings 5

Chapter 25—Combustible-Gas, Toxic-Gas, and Low-Oxygen Detection

NOTE: *The current version of this chapter is maintained and approved by the Safety and Health Division (SHeD). The last revision date of this chapter was June 2012. The current version is maintained on the Glenn Research Center intranet at http://smad-ext.grc.nasa.gov/shed/pub/gsm/gsm-manual.pdf. Approved by: Chief Safety and Health Division*

1.0 PURPOSE

This chapter establishes procedures and practices for determining the need for systems to detect low oxygen, combustible gases and vapors, and toxic gas and for installing and maintaining these systems at the NASA Glenn Research Center (GRC) at Lewis Field and Plum Brook Station.

2.0 APPLICABILITY

The provisions of this chapter are applicable to any operation at GRC (Lewis Field and Plum Brook Station) that involves the use of the following materials:

- Oxygen displacing gases (including gases used or stored in their liquid or solid phase), such as nitrogen, helium, argon, carbon dioxide and refrigerants.
- Flammable and combustible gases (including gases used or stored in their liquid or solid phase), such as hydrogen, methane, and acetylene
- Flammable and combustible liquids, such as solvents
- Oxidizers (including gases used or stored in their liquid or solid phase), such as oxygen, peroxides, chlorates, perchlorates, nitrates, and permanganates
- Toxic gases and liquids

This chapter does not address fire detection and fire suppression systems. Please contact the Safety and Health Division (SHeD) for information on these systems.

3.0 BACKGROUND

Test cells and laboratories, like confined spaces, may have limited means for entry and egress. In addition, they are enclosed so that natural or mechanical ventilation may not reduce air contaminants to safe levels if a material spill or release occurs. Entry into these areas without proper precautions could result in injury, impairment, or death due to

- An atmosphere that is flammable or explosive
- Lack of sufficient oxygen to support life
- Inhalation of toxic gases

The installation and use of detection systems provides an early warning of potential hazardous situations and allows occupants and responders to make informed decisions.

4.0 POLICY

It is GRC policy to protect personnel by installing, using, and maintaining detection systems where there is a potential for developing a hazardous atmosphere. Such detection systems shall be designed to give an early warning of potential hazards. Proper personnel and system procedures shall be developed to ensure adequate emergency response.

If a detection system is required, this will be noted as a condition of operation on the Safety Permit (see Chapter 1A of the Glenn Safety Manual), Laboratory Safe Operating Procedure (see Chapter 25 of Glenn Occupational Health Manual

- Laboratory Safe Operating Procedure
- Health and Safety Plan

5.0 RESPONSIBILITIES

5.1 Requester

It shall be the requester's responsibility to determine probable need for a detection system (see Section2.0). The entire process for obtaining a detection system is summarized in Appendix B. The requester's responsibilities are to:

- Evaluate the need for a detection system based on the potential for exposure, and the implementation of engineering and/or work practice controls to limit the exposure. Fill out the supporting documentation (see Appendix C) and forward it to SHeD for review..
- IF detection system is needed, initiate a work request with FD and provide supporting documentation (see Appendix D).
- Secure/provide the funding for the project
- Keep FD informed of the project's viability.
- Discuss with FD and SHeD the requirements for the detection system.
- Install engineering controls and implement work practice controls as specified during the evaluation of need for a detection system.
- Monitor progress of the task via the FD contact and keep the ASC informed.
- Send a copy of the evaluation of need for a detection system , including appropriate actions taken per the evaluation, to the ASC as part of the Safety Permit Request.
- At the completion of a process (research project, facility operation,) and when it is determined that an active sensor system is not longer needed (based on repeating aforementioned steps) the requestor shall initiate a deactivation process. The requestor shall first consult with the ASC and SHeD and then complete and submit a work request to FD for sensor system deactivation. .

5.2 Safety Committee

The SC shall sign the work request to evaluate the need for a detection system or to deactivate the system, and shall indicate on the Safety Permit the need for a detection system as a condition for operation.

5.3 Safety and Health Division

It is SHeD's responsibility to

- Review information provided by the requester and physically survey the area prior to evaluating the need for a detection system
- Review requestor provided Appendix C and make comments/recommendations.
- Contact the requester and the ASC for additional technical assistance during the assessment process
- Recommend the appropriate engineering controls; type of detection system, alarm response, alarm settings, location of sensors, alarms, and warning lights; specialized evacuation procedures; warning signs; barricades; and the required conditions of operation to be included on the Safety Permit
- Provide FD with an evaluation (Appendix D)
- Coordinate the development of specialized evacuation procedures with the building manager, SHeD, the ASC, and the requester
- Update the building evacuation plan
- Sign the work request for deactivation of the detection system

5.4 Facilities Division (FD)

The FD is responsible, through its appropriate branches, for the overall coordination and implementation of the work request for detection systems. Such responsibility includes the following actions:

- Coordinate the procedure for assessing the need for a detection system
- Create a biddable detection system design for the Procurement Division
- Keep the requester informed of the status of the work request
- Inform the ASC, SHeD, and the requester of system installation or system deactivation
- Maintain configuration control on all detection systems
- Maintain a file with all appropriate documentation on detection systems, including dates of installation and deactivation
- Design all changes to detection systems
- Activate the detection systems upon request (the initial activation shall take place while the installing contractor is present)
- Provide the necessary preventive maintenance and calibration to ensure proper operation of the detection systems
- Deactivate detection systems on request
- Manage the construction services for all new detection systems

5.5 Building Manager

The building manager shall inform building occupants and evacuation wardens of any modification to the building evacuation plan.

6.0 REQUIREMENTS

The entire procedure is illustrated in Appendix **B**.

6.1 Assess the Need for a Detection System

Once it becomes known that an activity will include the use of, or generation of, a material listed in Section **2.0**, the requester shall evaluate the need for a detection system and contact SHeD for support. Utilize Appendix C (Supporting Documentation for Evaluating the Need for a Detection System) for the evaluation.

The SHeD engineer/IH shall review the evaluation of need for the detection system. If the need is established, the requestor shall prepare a work request (NASA C-709) and provide supporting documentation in Appendix D to FD to design and install a detection system. It is important that the requester submit the work request at least 3 months prior to the required activation date so that FD can ensure that the detection system will be installed on schedule and at a minimum cost to the requester. The work request shall be signed by the requester's division chief and the chairman of the appropriate ASC.

6.2 SHeD Evaluation

SHeD shall review the information provided by the requester. This shall include a walkthrough of the area with the requester. A written report (see Appendix D) of the evaluation shall be provided. Copies of the written evaluation report shall be sent to the Chief of SHeD, the chair of the ASC, and the requester. Section 6.2.1 to Section 6.2.8 describe what this written report shall include.

6.2.1 Need for Detection System

Typically, the determination of need will be made by calculating the percent oxygen or the concentration of a toxic or combustible gas in the area after a total release of the material; that is, this calculation will assume a worst-case scenario (e.g., power failure or systems failure). The supporting documentation submitted with the Safety Permit Request shall include these calculations. If the evaluation indicates that a hazardous condition would not occur, no detection system is required.

6.2.2 Engineering Controls

SHeD will review the engineering controls specified in the preliminary design. SHeD may also recommend additional engineering controls in the evaluation report. Examples of engineering controls follow:

- Designing the operation or process so that no material is present in the lines unless the operation or process is in use
- Using an interlock connected to ventilation fans
- Using fast-actuating shutoff valves

6.2.3 Type of Detection System

SHeD will recommend the type of detection system needed.

6.2.4 Alarm Settings

Alarm settings shall be determined on the basis of the evaluation, the detection system manufacturer's recommendations, and applicable codes and standards. Typical settings follow:

TABLE 6.1.—ALARM SETTINGS

Type of detection system	Low	High
Combustible gas	10-percent lower exposure limit	40-percent lower exposure limit
Low oxygen	19.5 percent	Not applicable
Toxic gas	Threshold limit value	Short-term exposure limit or Ceiling Value

6.2.5 Alarm Response

The alarm response will be determined by SHeD in consultation with the requester. Alarm response includes variables such as a room/area evacuation alarm versus a building-wide evacuation alarm, and a local-only alarm versus a Central Station alarm.

6.2.6 Sensor, Alarm, and Warning Light Location

SHeD will recommend the number and location of the sensors. In general, the sensors should be placed as close to the potential hazard source as possible. The height at which the sensor is placed is typically based on the manufacturer's recommendations, but it may be altered (with approval of the jurisdictional authority) because of the specific configuration of the system and the properties of the material being used. In general, audible alarms are placed inside the room or area, and a warning light is placed outside the room or area over the door.

6.2.7 Warning Signs and Barricades

Warning signs are required near each warning light or audible alarm to provide sufficient information regarding the hazard. SHeD shall specify the number of warning signs required, the appropriate wording on the sign, and the proper locations for the signs. SHeD shall also specify the need for any barricades.

6.2.8 Evacuation Procedures

Any specialized evacuation procedures will be included in the building evacuation plan (see Glenn Emergency Preparedness Plan for further information regarding building evacuation plans at evac-Lewis Field or evac-PBS). Specialized evacuation procedures will be developed on a case-by-case basis by SHeD, the building manager, and the requester. SHeD shall ensure that the building evacuation plan is updated as required.

6.2.9 Condition of Operation on the Safety Permit

SHED will specify on the Safety Permit that the detection system is a condition of operation. This information will be included with the Safety Permit Request.

6.3 Design of the Detection System

The FD representative will discuss with the requester the evaluation report issued by SHeD. SHeD will support this discussion on an as-needed basis. If the detection system is needed, the requester shall confirm the funding source noted on the original work request prepared by the FD representative. FD will then design the detection system. Any modifications to the requirements listed on the evaluation report shall require concurrence by SHeD.

6.4 Installation of the Detection System

Once the need for a detection system has been determined and the design has been completed, FD will oversee the ordering and installing of the equipment.

After the equipment is installed, tests shall be conducted to demonstrate that all of the detection system functional requirements have been met.

FD shall inform the chairman of the SC, SHeD, and the requester that the detection system has been installed.

SHeD shall update the building evacuation plan to include the installed detection system. FD will assemble a file on the installed detection system. The file will contain copies of the instruction manuals, the installation drawings, and the acceptance test results. It will be used for maintenance and calibration.

6.5 Changes to a Detection System

To have changes made to the design and/or installation of an existing detection system, the requester should submit a work request to FD, as described in Section 5.1. The procedure for making these changes is the same as the procedure described in Section 5. A change to the installed detection system could be as minor as the addition or deletion of a single component, such as a detector or a strobe/siren, or as major as a large expansion or complete deactivation of the detection system.

6.6 Calibration and Maintenance of the Detection System

Once a system has been activated, FD will automatically implement a program of periodic calibration and preventive maintenance, as recommended by the manufacturer.

6.7 Detection System Deactivation

For sensor system deactivation the requester shall submit a request to SHeD and ASC to evaluate the process and validate that deactivation is a safe course of action. Once validated, the requester shall submit a work request to FD, with supporting documentation, to have the system deactivated. FD shall update the drawings to reflect the deactivation of the system, and shall update the building evacuation plan.

6.0 The SHeD verification procedure for this section shall include assuring complete documentation throughout the detection system process, confirming that the specialized evacuation procedures are current and updated in the evac-Lewis Field and evac-PBS Building Specific Emergency Information web pages, and periodic site inspection for confirmation of current calibration tags on sensor panel boxes and periodic verification of sensor replacement within the manufacturers specified service life and exclusive sensor characteristics

7.0 RECORDS

- Supporting Documentation for Evaluating a Need for a Detection System (Appendix C)—Maintained by FD in their maintenance database as part of the original Safety Permit.
- Request for a Detection System (Appendix D)—Maintained by FD in their maintenance database as part of the original Safety Permit.

8.0 REFERENCES

Document number	Document name
GLM–QSA–**1700.1**	NASA Glenn Safety Manual, Chapter **1A**—Safety Permit System
NPR **1800.1**	NASA Procedural Requirement, NASA Occupational Health Program Procedures
OAC 3745.77	NASA GRC Title V Permit Information
ANSI Z88.2	American National Standards Institute. Practices for Respiratory Protection
ANSI/NFPA 53M	American National Standards Institute/National Fire Protection Association. Oxygen-Enriched Atmospheres, 1992.

ANSI/NFPA 71	American National Standards Institute/National Fire Protection Association. Signaling Systems for Central Station Service, 1989.
ANSI/NFPA 325M	American National Standards Institute/National Fire Protection Association. Fire Hazard Properties of Flammable Liquids, Gases, and Volatile Solids, 1991.
	Handbook of Compressed Gases. Third ed., Compressed Gas Association, Inc., Arlington, VA, 1990.
NFPA 30	National Fire Protection Association. Flammable and Combustible Liquids Code, 1993.
NFPA 50	National Fire Protection Association. Standard for Bulk Oxygen Systems at Consumer Sites, 2001.
NFPA 50A	National Fire Protection Association. Standard for Gaseous Hydrogen Systems at Consumer Sites, 1999.
NFPA 50B	National Fire Protection Association. Standard for Liquified Hydrogen Systems at Consumer Sites, 1999.
NFPA 54	National Fire Protection Association. National Fuel Gas Code, 2006.
NFPA 72	National Fire Protection Association. National Fire Alarm Code, 2007.
NFPA 72G	National Fire Protection Association. Guide for the Installation, Maintenance, and Use of Notification Appliances for Protective Signaling Systems, 1989.
NFPA 495	National Fire Protection Association. Explosive Materials Code, 2006.
29 CFR 1910, Sec. **94**	OccupationalSafety and Health Standards. Ventilation.
29 CFR 1910, Sec. **134**	Occupational Safety and Health Standards. Respiratory Protection.
29 CFR 1910, Sec. **146**	OccupationalSafety and Health Standards. Permit-Required Confined Spaces.
29 CFR 1910, Sec. **1200**	Occupational Safety and Health Standards. Hazard Communication.
42 CFR **84**	Occupational Safety and Health Research and Related Activities. Approval of Respiratory Protective Devices.

APPENDIX A.—DEFINITIONS AND ACRONYMS

Area safety committee (ASC)

Combustible or flammable gas.—A gas that burns—this includes fuel gases, hydrocarbons, hydrogen, and carbon monoxide.

Combustible or flammable liquid.—Any liquid that may release vapors capable of igniting at or above 100 ºF.

Detection system.—A device or collection of devices designed and installed to produce an alarm signal in the presence of a predetermined level of a specific hazardous material or condition.

Facilities Division (FD)

Glenn Research Center (GRC)

Hazardous material.—A material that is a physical hazard or a health hazard. This includes materials that are carcinogenic, toxic, irritating, corrosive, flammable, or reactive.

Inert material.—A material that, under normal temperatures and pressures, does not react with other materials.

Low-oxygen (or oxygen-deficient) atmosphere.—An oxygen concentration of less than 19.5 percent by volume.

Material Safety Data Sheet (MSDS).—A fact sheet containing characteristics and hazards of a specific hazardous material. MSDSs provide precautionary information on the safe handling of the material as well as emergency and first-aid procedures.

Oxidizer.—A substance that evolves oxygen and thus may initiate or promote combustion in other materials, thereby causing fire either of itself or through the release of oxygen or other gases. This group includes chemicals such as peroxides, chlorates, perchlorates, nitrates, and permanganates.

Requester.—As used in this chapter, the requester is the project manager, research engineer, operations engineer, or person who requests the detection system.

Short-term exposure limit.—This is a 15-min time-weighted average exposure that should not be exceeded at any time during a workday. Exposures above the time-weighted average up to the short-term exposure limit should not be longer than 15 min and should not occur more than 4 times per day. In addition, there should be at least 60 min between successive exposures in this range.

Threshold limiting value.—The time-weighted-average concentration for a normal 8-hr workday and a 40-hr workweek; this is the amount to which nearly all workers may be repeatedly exposed, day after day, without adverse health effects.

Toxic substance.—A chemical substance with properties that may cause impairment of the central nervous system, illness, or death from exposure via inhalation, absorption, or ingestion.

APPENDIX B.—DETECTION SYSTEM PROCESS

The process for obtaining a detection system follows:

- Activity involves the use of or operation of a material listed in Section 2.0.
- Requester completes supporting documentation evaluation of need for a detection system (see Appendix C) and forwards it to SHeD.
- SHeD reviews the evaluation of need for a detection system (Appendix C).
- SHeD completes evaluation (see Appendix D) --> Copies sent to requester and chairman of the ASC.
- If detection system is needed, SHeD instructs requester to initiate a work request with FD.
- Requester initiates a work request with FD.
- Requester, SHeD and FD meet to discuss scope of effort.
- FD generates a Statement of Work, attaches it to work request, and obtains a cost estimate
- FD notifies requester of cost
- Requester provides funding
- FD oversees the procurement and installation of the detection system
- FD tests system with SHeD and requester present
- FD maintains configuration control drawings of the detection system.
- SHeD updates building evacuation plan.
- ASC adds detection system as a condition of operation on the Safety Permit.
- FD calibrates and maintains the detection system per manufacturer's recommendations.
- Change or deactivation of the detection system must be implemented via a work request that goes through the same process.

APPENDIX C.—SUPPORTING DOCUMENTATION FOR EVALUATING THE NEED FOR A DETECTION SYSTEM

Building: _____ Room/Area: _____

Evaluator: _____ Date: _____

Description of system (include preliminary design drawings or sketches):

Operational procedures:

Materials to be used or stored and the quantity of each(attach Material Safety Data Sheets):

Approximate dimensions of the room, test cell, cabinet, and etc., where the chemicals will be used or stored. Subtract the approximate volume of **large** equipment located in the same room or test cell:

Existing or planned engineering controls (e.g., interlocks, ventilation, or leak detection):

Room ventilation flow rate (cfm): Supply: _____ Return: _____

Type of local exhaust ventilation, if any (e.g., fume hood or ventilation cabinet):

Ventilation flow rate of local exhaust ventilation (cfm):

Volume of local exhaust ventilation hood or cabinet:

Calculate the percent oxygen or the concentration of a toxic or combustible gas in the area (room/cell volume) after a total release of the material; that is, this calculation will assume a worst-case scenario (e.g., power failure or systems failure):

Compare these “worst-case scenario” results to:

10 % & 40 % of the lower explosive limit (LEL) for the combustible gas being used

Loss of habitable atmosphere (LOHA) at an oxygen level < 19.5 %

Toxic gas exposure limit values including time-weighted averages, short-term exposure limits and ceiling values

APPENDIX D.—REQUEST FOR A DETECTION SYSTEM

Work request no.: _____

Building: _____ Room/Area: _____

Requestor: _____

Signature of Requestor:_____ Date: _____

SHeD reviewer: _____

Detection system needed: ___Yes ____No

Worst-case concentration: _____

Allowable concentration: _____

Recommended engineering controls:

Type of detection system:

Alarm setting(s): Low _____ High _____

Alarm response:

_____ Room evac. or _____ Bldg-wide evac.

_____ Local only or _____ Fire station

Number of sensors required: _____

Sensor(s) location(s):

Alarm indicating device(s) location(s):

Number of warning signs required: _____

Wording:

Location:

Evacuation procedures:

Building evacuation plan updated: ____Yes ____No

Conditions of operation (to be included on the safety permit):

Barricades required:

Additional comments:

Contents

1.0 PURPOSE....2
2.0 APPLICABILITY....2
3.0 BACKGROUND....2
4.0 POLICY....2
5.0 RESPONSIBILITIES....2
5.1 Building Evacuation Wardens and Alternates....2
5.2 Individual Employees....3
5.3 Supervisors....3
5.4 Building Managers....3
5.5 Employees With Special Needs....4
5.6 Protective Services Force....4
5.7 SHeD Fire Protection Coordinator....4
5.8 Contracting Officer's Technical Representative....4
6.0 REQUIREMENTS....4
6.1 Building Evacuation Plans (*OSHA, 29 CFR 1910.38*)....4
6.2 Evacuation Signals....5
6.3 Escape Procedure and Routes....5
6.4 Critical Operations....5
6.5 Occupant Accountability....5
6.6 Preferred Means of Reporting....5
6.7 Emergency Evacuation Procedures for Employees with Special Needs....5
6.7.1 Special-Needs Employees Emergency Evacuation Plan....5
6.7.2 Special Needs Responsibilities....6
6.8 Training....6
6.8.1 Supervisors....6
6.8.2 Building Evacuation Wardens and Alternates....6
6.8.3 Individual Employees....6
7.0 RECORDS....6
8.0 REFERENCES....7
APPENDIX A .—DEFINITIONS AND ACRONYMS....8
APPENDIX B .—SPECIAL NEEDS PLAN....9
Signature Page....10

Chapter 27—Building Emergency Evacuation Program

Note: The current version of this chapter is maintained and approved by the Safety and Health Division (SHeD). The last revision date of this chapter was February 2012. The current version is located on the Glenn Research Center intranet at http://smad-ext.grc.nasa.gov/shed/pub/gsm/gsm-manual.pdf
Approved by: Chief of Safet and Health Division.

1.0 PURPOSE

This chapter describes the Glenn Research Center (GRC) Building Emergency Evacuation Plan, including the basic procedures and responsibilities.

2.0 APPLICABILITY

The provisions of this chapter are applicable to all NASA employees and to all other agencies, organizations, and contractor personnel that design, construct, inspect, operate, maintain, or manage facilities or systems within the confines of the GRC at Lewis Field and Plum Brook Station. Evacuation procedures are applicable during fires and other occurrences for which evacuation is appropriate, including low oxygen or toxic spills in buildings. Shelter provisions may be invoked for hazardous conditions outside the building (e.g., weather conditions, chemical spill, security incident, etc.).

3.0 BACKGROUND

Emergency evacuation plans are created to assist occupants in exiting the building by the indicated egress routes. Plans include any procedures for assisting employees with special needs and buildings that might have associated critical operations.

4.0 POLICY

It is GRC management policy that an emergency evacuation plan be established and implemented in accordance with NASA Procedural Requirement (NPR) 8715.3C, NASA General Safety Program Requirements, and the Occupational Safety and Health and Administration (OSHA) Code of Federal Regulations (CFR) 29 CFR 1910.38.

5.0 RESPONSIBILITIES

5.1 Building Evacuation Wardens and Alternates

Building evacuation wardens and alternates shall direct and supervise the planned and controlled movement of all personnel out of GRC buildings. They shall direct and supervise the planned evacuation and controlled movements of personnel to the muster points. Building evacuation wardens duties are to:

- Ensure that personnel move to the muster point in the event that an evacuation signal or a shelter signal has sounded.
- Ensure the safe flow of personnel along approved evacuation routes.
- Check assigned area to ensure personnel have evacuated the area.
- Assist persons with special needs in accordance with preplanned procedures (see Appendix B).
- Recognize the presence of potential hazards and know the Building Evacuation Plan in order to provide appropriate direction to personnel.
- Once outside, if there are any circumstances that require further assistance in helping occupants out of the building, the evacuation warden will pass that information along to the incident commander.
- If there are no further circumstances and all assigned areas have been checked, proceed to the muster point and wait for further directions from the incident commander.

- The evacuation warden shall contact their supervisor to inform them of the emergency situation and any known missing persons. At that time, the warden might assist the supervisor in the accountability process.
- Assist Glenn Protective Services personnel in preventing unauthorized entry into buildings and loss or theft of Government and private property. Cooperate with all emergency personnel.

5.2 Individual Employees

Individual employees shall:

- Know the evacuation procedure applicable to each of their work locations to ensure their individual safety in the event of an emergency.
- Know the location of fire alarm pull boxes.
- Have secondary exit route in case primary exit route is blocked.
- When evacuation alarm sounds, stop work and, if applicable and safely able to, turn off computers or any electrical device, and immediately evacuate the building, assisting visitors, interns, etc., along the approved evacuation routes to a safe area. Do not use elevators. Close, but do not lock office doors.
- Report to your supervisor, building evacuation warden or alternate once outside the building; supervisors have assigned the evacuation wardens for each building.
- Stay at designated muster point until told to report to a shelter area or that the building is safe to reenter by the incident commander or emergency personnel.
- Maintain clear and unobstructed egress routes.
- Review the SHED Web site for evacuation routes for present location.
- If the employee has any visitors, students, interns, or other personnel, be certain to review the evacuation plan with them and assist them out of the building.

5.3 Supervisors

Supervisors shall:

- Review the GRC Building Evacuation Plan with his/her employees.
- Assign building evacuation wardens and alternates for each area and ensure this responsibility is specified in the employee's performance plan.
- Instruct wardens and employees on their responsibilities under the emergency evacuation plan; maintain the records that all of their employees are made aware of their responsibilities.
- Develop an evacuation procedure when a person with special needs is assigned to them. This procedure shall be supplied to and reviewed by the SHED Fire Protection Coordinator (see Section **6.7)**.
- Ensure that a specific written procedure is developed for any critical operation that would delay evacuation. This procedure shall be supplied to and reviewed by the SHED Fire Protection Coordinator, the Safety Committee Chair, and/or Facility Manager, as appropriate.
- Maintain an up-to-date list of all his/her employees, including name, building, room number, work phone, home phone, and cell phone, to contact and account for all employees.

5.4 Building Managers

Building managers shall:

- Post evacuation routes throughout the building.
- Post list of building evacuation wardens on the bulletin boards.
- Review the Building Evacuation Plan annually in conjunction with the Safety Training in the Execution of Emergency Procedures (STEEP) exercise.

- Notify the SHeD Fire Protection Coordinator of any proposed or planned changes to the building or any activities that may affect the evacuation plan.

5.5 Employees With Special Needs

Employees with special needs shall work with the SHED Fire Protection Coordinator, their representative from the Office of Human Capital Management, and their supervisor to develop an emergency evacuation procedure specific to their needs. Refer to Appendix B for further direction on policy and procedure development.

5.6 Protective Services Force

Protective services force shall:

- Monitor emergency alarms and provide initial response to these alarms.
- Respond to emergencies to provide control of vehicles and personnel.
- Coordinate emergency resources and escort emergency vehicles to the scene.
- Arrive at the scene of the emergency, take charge of the evacuation, provide information to the responding fire department, and coordinate recovery efforts.
- Prevent unauthorized entry into building and loss or theft of Government and private property.
- Once the building has been deemed safe to occupy by the incident commander, notify all of the muster points that it is safe to reenter the building.
- Identify shelter location for inclement weather and coordinate the transportation of occupants.

5.7 SHeD Fire Protection Coordinator

SHeD Fire Protection Coordinator shall

- Provide overall coordination for evacuation preplanning and preparation of the Building Evacuation Plans.
- Provide consultation for the safety permit program to ensure that any hazards that may affect life safety or any evacuation procedures are addressed in the safety permit.
- Ensure STEEP exercises are conducted with assistance from the building manager annually and maintain records of these exercises.
- Annually review the buildings evacuation plans.

5.8 Contracting Officer's Technical Representative

Contracting Officer's Technical Representative shall ensure that contractor management is aware of GRC's evacuation procedures and the appropriate Building Evacuation Plan.

6.0 REQUIREMENTS

6.1 Building Evacuation Plans (*OSHA, 29 CFR 1910.38*)

This section specifies the content of the GRC Building Evacuation Plans. A Building Evacuation Plan shall be developed for each building that contains more than 10 employees. A generic evacuation plan is also developed for buildings that contain 10 employees or fewer. The SHeD Fire Protection Coordinator, in coordination with area supervisors, building managers, and Office of Protective Services, shall develop Building Evacuation Plans for each facility and/or building. Each plan will take into consideration potential hazards in the area, type of occupancy, research activities, daily activities, and personnel assigned to the area. Once the plan is developed, the Chief of SHeD approves it. The SHeD Fire Protection Coordinator and the building manager review the plan every year as a mandatory part of the STEEP exercise. The building manager is responsible for informing the SHeD Fire Protection Coordinator of any proposed or planned changes to the building or activities that may affect the evacuation plan, including any plans for lockdown of facilities for classified programs. The Building Evacuation Plan shall include the following:

- Evacuation diagram illustrating the primary and alternate routes to an exit

- Alarm system used to notify personnel to evacuate the area
- Locations of alarm pull boxes and fire extinguishers
- Muster point outside the building where all personnel will gather and be accounted for
- Muster point inside in the event of a tornado or other shelter in place event (if applicable)
- List of evacuation wardens and their alternates
- Identification of assigned areas for each evacuation warden and their alternates
- Identification of special evacuation procedures and/or shutdown requirements

6.2 Evacuation Signals

An evacuation alarm sounding within a building always means that employees shall evacuate the building or facility immediately. In simple buildings (such as a gate house) where there are no evacuation alarm pull boxes, a direct voice communication, a shout of "Emergency! Get out!," will be used instead of an alarm.

6.3 Escape Procedure and Routes

In general, when the evacuation alarm is heard, a fire is seen, or another emergency condition becomes known, employees shall promptly secure the equipment in use and vacate the premises to the designated muster point where they will remain until released by the incident commander or emergency personnel. They will take the designated safe route to an exit, warning others along the way. The first to arrive at an evacuation alarm pull box or exit will sound the alarm and proceed to a muster point. The route followed during evacuation will be in accordance with the designated Building Evacuation Plan or as directed by a building evacuation warden.

6.4 Critical Operations

Employees may be required to shut down gas and/or electrical systems and other special equipment that could be damaged if left operating or could create additional hazards to emergency responders (such as releasing hazardous materials). Any delay in evacuation for a critical operation (other than staying to secure an operation that will result in only a very short delay) will be preplanned and covered by a specific procedure that is approved by the supervisor, Safety Committee Chair, and SHeD Fire Protection Coordinator. Copies of the approved procedure shall be included in the Building Evacuation Plan.

6.5 Occupant Accountability

Upon arrival at the designated muster point, each evacuation warden shall verify that all employees of their organizational component have reached safety. Names and last known location of missing employees will be reported to their supervisor for relay to the incident commander (if requested) or any other onsite response personnel.

6.6 Preferred Means of Reporting

Any person who discovers a fire or other emergency shall, from a safe location, immediately dial 911 on the nearest internal GRC telephone to report the fire and assistance needed. The caller will state his or her name, location, type of help needed, and stay on the telephone until released by the dispatcher. Telephones will have stickers indicating the emergency number. Personnel utilizing cell phones or outside phones will call 216–433–8888 at Lewis Field and 419–621–3222 at Plum Brook Station. This phone number will ring directly to the Glenn Emergency Dispatcher.

6.7 Emergency Evacuation Procedures for Employees with Special Needs

6.7.1 Special-Needs Employees Emergency Evacuation Plan

- A written emergency evacuation plan shall be developed for all employees who have declared themselves to have a physical disability identified by the Americans with Disabilities Act (ADA). The employee's supervisor, in consultation with SHeD and their representative from the Office of Human Capital Management, shall prepare the specific evacuation plan (see example in Appendix B). The plan shall define provisions for emergency egress, including the method of egress, route of egress, area of rescue assistance, contingency route(s), and duties of other employees assisting the individual.

- Upon approval of the plan by the SHED Fire Protection Coordinator, copies will be on file in SHeD and with the employee's supervisor.
- All individuals involved with the special needs evacuation plan will be given a copy of the plan by the individuals' supervisor.
- Wherever possible, such persons shall have their normal duty station located on the ground-floor level of buildings.
- If the employee must work alone, an appropriate level of the "Buddy System" (Glenn Safety Manual, Chapter 22) shall be used. This should be outlined in the employee's Special Needs Employee Emergency Evacuation Plan.
- The Special Needs Employee Emergency Evacuation Plans shall be updated when there is any change to the plan.

6.7.2 Special Needs Responsibilities

- SHeD shall be responsible for monitoring the locations of all employees with special needs at the Center and to ensure that proper alarm devices and safety procedures are provided to accommodate safe egress.
- The supervisor shall develop the written evacuation plan and advise the building evacuation wardens, building manager, and any others involved, of the specific evacuation procedures for these persons.
- The employee shall be responsible for knowing and understanding GRC emergency evacuation procedures in general and his/her specific emergency evacuation plan. The employee is responsible for making his/her whereabouts known at all times. The employee will notify their supervisor of any change in his/her condition that could affect his/her performance during an emergency.

6.8 Training

6.8.1 Supervisors

The supervisors shall receive training from the code Q or QS representative on their responsibilities during an emergency evacuation. When changes or additions to the procedures are made, the Q or QS representative shall review them with the supervisors.

6.8.2 Building Evacuation Wardens and Alternates

Building evacuation wardens and alternates shall receive annual on-the-job training in evacuation procedures from their supervisor. This training shall be documented by their supervisor.

6.8.3 Individual Employees

Upon initial assignment, the immediate supervisor shall review with each individual employee those parts of the Glenn Emergency Evacuation Plan that the employee must know to protect him or herself in the event of an emergency. The supervisor shall also review with the employee any changes in the employee's responsibilities or any designated actions under the plan. When present, employees shall participate in all STEEP exercises at their location as though the incidents were real.

6.0 Verification of compliance with these requirements is done by SHeD during periodic evaluation and audits. Each year the supervisors are offered training on the evacuation plan to prepare them for what actions to take during an emergency. The actions are then evaluated during the STEEP drills. Any discrepancies are entered and resolved in SHEtrak.

7.0 RECORDS

STEEP drill records.—Maintained by SHeD Fire Protection Coordinator.

Supervisor training records.—Maintained by the Human Capital Development Branch.

Building Evacuation Plans.—Maintained by SHeD Fire Protection Coordinator.

Special needs evacuation plans.—Maintained by the employees' supervisor.

Critical operation plans.—Maintained by that operation's supervisor.

Warden training documentation.—Maintained by the supervisor.

Employee training documentation on the evacuation procedure.—Maintained by the supervisor.

8.0 REFERENCES

Document Number	Document Name
29 CFR 1910.38	Occupational Safety and Health Administration Standard "Emergency Action Plans"
28 CFR Part 36	Americans with Disabilities Act
	Glenn Emergency Preparedness Plan, Chapter 4
GLM–QS–1700.1	NASA Glenn Safety Manual, Chapter **31**, Fire Protection
8715.3C	NASA Procedural Requirements (NPR) NASA General Safety Program Requirements

APPENDIX A.—DEFINITIONS AND ACRONYMS

Americans with Disabilities Act (ADA)

Code of Federal Regulations (CFR)

Glenn Research Center (GRC)

NASA Procedural Requirement (NPR)

Occupational Health and Safety Administration (OSHA)

Safety and Health Division (SHeD)

Safety Mission Assurance Directorate (SMAD)

Safety Training in the Execution of Emergency Procedures (STEEP).—An unannounced exercise of evacuation and other procedures related to an emergency.

APPENDIX B.—SPECIAL NEEDS PLAN

Name: _____ Location: _____ Phone Number: _____

Nature of Special Need: _____

Supervisor's Name: _____ Location: _____ Phone Number: _____

Individuals assisting individual with Special Needs:_____

Primary: _____ Location: _____ Phone Number: _____

Secondary: _____ Location: _____ Phone Number: _____

Building Manager: _____

Primary Exit route from bldg:

_____

_____

_____

Secondary Exit route from bldg:

_____

_____

_____

Contingency Plan: (Example: if located on other than first floor of multi-story bldg. how will egress be accomplished, roles of responding personnel.)

_____

_____

_____

Comments:

_____

_____

_____

Note: Individuals assisting an individual with special needs will help the person out of the building or assist them to the area of rescue assistance during the evacuation of the building.

SIGNATURE PAGE

Individuals with Special Needs
Evacuation Plan

Individual with Special Needs: _____ Date: _____

Supervisor: _____ Date: _____

Individuals assisting the individual with special needs:

Primary: _____ Date: _____

Secondary: _____ Date: _____

Bldg. Manager: _____ Date: _____

SHeD Representative: _____ Date: _____

Review Date: _____

Contents

1.0 PURPOSE 2
2.0 APPLICABILITY 2
3.0 BACKGROUND 2
4.0 POLICY 2
5.0 RESPONSIBILITIES 2
5.1 Requester 2
5.2 Safety and Health Division 3
5.3 Authority Having Jurisdiction 3
5.4 Worker Performing Hot Work 4
5.5 Fire Watch 4
5.6 Supervisor shall 5
5.7 Dispatch shall 5
6.0 REQUIREMENTS 5
6.1 Program Requirements (*NASA STD 8719.11*) 5
6.2 Program Requirements (*29 CFR 1910 and 29 CFR 1926*) 6
6.3 Program Requirements (NFPA 51B) 6
6.4 Training Requirements (*NASA STD 8719.11*) 6
7.0 RECORDS 6
8.0 REFERENCES 6
APPENDIX A .—Definitions and Acronyms 8

Chapter 28—Hot Work Authority

***Note:** The current version of this chapter is maintained and approved by the Safety and Health Division (SHeD). The last revision date of this chapter was February 2012. The current version is maintained on the Glenn Research Center intranet at http://smad-ext.grc.nasa.gov/shed/pub/gsm/gsm-manual.pdf. Approved by Chief of Safety and Health Division.*

1.0 PURPOSE

This chapter covers provisions to prevent loss of life, property, and research capability caused by ignition from hot work operations and specific requirements to prevent such ignition. The chapter also provides a review of precautions and measures to be taken to ensure that all occupational health requirements are met to protect the workers in the area. To facilitate these measures, prior to starting any hot work activity, a Hot Work Authorization Permit (NASA **C–7A**) shall be required.

2.0 APPLICABILITY

This chapter is applicable to the following:

- All NASA Glenn Research Center (GRC) civil servant employees at Lewis Field and Plum Brook Station
- All GRC contractors, other NASA contractors, and non-NASA and noncontractor individuals present at GRC
- Other Government organizational elements that are tenants at GRC or any other locations under GRC jurisdiction

3.0 BACKGROUND

Hot work processes are a necessary part of our industrial world. Too often, however, the persons who use, contract, or supervise the use of these processes do not fully appreciate that their improper use can result in loss of life or property by fire and explosion.

As per the National Fire Protection Association (NFPA), approximately 6 percent of fires in industrial properties and many fires in other properties have been caused by cutting and welding, primarily with portable equipment in areas not specifically designed for such work.

4.0 POLICY

The requirement for a GRC Hot Work Permit program is delineated in NASA Policy Requirement (NPR) 8715.3, NASA Safety and Health Program Policy and NASA Standard 8719.11.

5.0 RESPONSIBILITIES

5.1 Requester

The requester identifies the need for hot work operations. If there is a need, the requester will verify if the hot work can be accomplished within a designated hot work area. If not, the requester shall complete a Hot Work Authorization Permit (NASA **C–7A**) and schedule a site visit with the Safety, Health and Environmental Division (SHED). This permit process requires the requester to review the site and operation and to schedule and conduct a site inspection with SHED prior to the start of hot work operations. For directions on scheduling the site visit with SHED, refer to the guideline titled: Guidance on Scheduling a Hot Work Authorization Permit Site Visit with the Safety and Health Division on the SHeD website. Immediately prior to starting hot work, the requester shall complete the Hot Work Pre-Operation Checklist (NASA **C–7B**). The requester shall verify that all conditions issued on the Hot Work Authorization Permit (NASA **C–7A**) are adhered to. The requester shall maintain and adhere to the Hot Work Authorization Permit and the associated Hot Work Pre-Operation Checklist documentation in the field including the responsibilities that follow.

The requester

- Shall verify that hot work is not being performed on a painted surface. All paint shall be removed prior to a hot work. Measures to abate any lead-based paint shall be undertaken as noted in Chapter **5** of the Occupational Health Programs Manual for lead-based-painted surfaces.
- Shall ensure that all conditions specified on the Hot Work Authorization Permit are adhered to.
- Shall post Hot Work Authorization Permit near workarea.
- Shall notify dispatch at Lewis Field 216–433–2088 or PBS at 419–621–3222 prior to and at the completion of hot work activities. A hot work activity is considered complete when the fire watch continuous inspection concludes.
- Shall designate the fire watch as required.
- Shall complete, post, and adhere to all aspects of the Hot Work Pre-Operation Checklist (NASA **C–7B**).
- Shall make appropriate safety and firefighting equipment available.
- Shall properly protect or remove flammable and combustible material within 35 ft of the hot work.
- Shall inspect equipment for worn or cracked hoses and oil or grease on regulators, torches, helmets, lenses, gloves, long-sleeved shirts, aprons, and long pants; inspect welding screen conditions and ventilation equipment; ensure cylinders are stored securely and upright and oxygen is stored away from fuel gas cylinders by 20 ft; inspect dented or cracked cylinders; and inspect electrical plugs on electrical welders, fire extinguishers, and gage conditions.
- Shall ensure that workers comply with the required safety and occupational health regulations.
- Shall return original Hot Work Authorization Permit (NASA **C–7A**) and all Hot Work Pre-Operation Checklists (NASA **C–7B**) to SHED to close out hot work. If these documents are not returned then, at the discretion of the SHED, new hot work permits will not be issued. If the documents are lost and unable to be returned the requestor will be required to attend the GRC Hot Work Training course, **GRC-4R1728**
- Shall verify compliance with 29 Code of Federal Regulations (CFR) 1910, 29 CFR 1926, and NFPA 51B

5.2 Safety and Health Division

- Serves as technical consultant for resolution of fire and life safety issues and concerns.
- Ensures that hazard controls have been identified on the Hot Work Authorization Permit (NASA **C–7A**).
- Conducts a site visit and provides an approval signature on the Hot Work Authorization Permit (NASA **C–7A**) and issues conditions on the permit.
- Shall determine and provide guidance if fire protection system will be required to be disabled during the hot work activities.
- Maintains a record file of completed Hot Work Authorization Permits for a period of 3 years.
- Terminates hot work operation when it is being performed unsafely and contacts the appropriate management personnel and SHeD.
- Conducts periodic site inspections to monitor implementation.
- On an annual basis assess the effectiveness of Hot Work Authorization Permit Program. This is accomplished by reviewing returned permits for accuracy and by trending findings associated with the periodic site inspections.

5.3 Authority Having Jurisdiction

- Reviews and approves the fire protection system impairment plan or procedure, which shall be implemented when a fire suppression system is removed from service for a period in excess of 4 hours.
- Provides technical guidance on applicable fire protection life safety codes.

5.4 Worker Performing Hot Work

- Shall be familiar with the site and the procedures for sounding a local fire alarm and notifying the NASA Emergency Dispatcher in the event of a fire. A method of direct communications to the NASA Emergency Dispatcher shall be available during the entire fire watch period at the site of the hot work.

  At Lewis Field, call 911 from a NASA phone or 216–433–8888 from a cell phone.

  At Plum Brook Station, call 911 from a NASA phone or 419–621–3222 from a cell phone.

- Shall be trained annually in the use of the fire extinguisher utilized at the specific site of the hot work (29 CFR 1910.157). The workers shall provide their own fire extinguishers independent of the fire extinguishers installed, for the sole purpose of protecting the building and occupants.
- At a minimum, one 2A:20B:C multipurpose dry chemical fire extinguisher shall be provided at each hot work site. Any alternate fire extinguishing agents must be reviewed by SHeD.
- Shall conduct hot work operations in a safe and controlled manner, including all identified conditions and controls listed on the Hot Work Authorization Permit (NASA **C–7A**) and the Hot Work Pre-Operation Checklist (NASA **C–7B**).
- Shall continue to perform hot work only as long as conditions are unchanged from those under which the permit was granted. If work conditions do change, hot work activities shall stop, all equipment shall be put in a safe shut down position as necessary, and a new permit applied for
- Shall comply with 29 CFR 1910, 29 CFR 1926, and NFPA 51B.

5.5 Fire Watch

A designated employee for fire watch is required any time or place hot work is performed outside a designated weld shop area.

The Fire Watch

- Shall have no other duties or responsibilities while performing the duties of the fire watch unless they meet the requirements of the Hot Work Pre-Operation Checklist (NASA **C–7B**), Fire Watch Requirements.
- Shall be trained annually in the use of the appropriate fire extinguishing (29 CFR 1910.157).
- Shall have a fire extinguisher readily available to fight small incipient incidents. The extinguishing equipment refers to additional fire extinguishers present at the site of the hot work that are independent of the extinguishers present for protecting the building occupants and building equipment.
- Shall perform required continuous inspections in all areas of hot work operations, including the areas adjacent, above and below the hot work area, for smoldering fires. These inspections shall be performed continuously for at least 30 min after completion of the hot work.
- .If work conditions do change, hot work activities shall stop, all equipment shall be put in a safe shut down position as necessary, and a new permit applied for.

- Shall be familiar with the site procedure for sounding a local fire alarm. In the event of a fire, notify the NASA Emergency Dispatcher:

  At Lewis Field, call 911 from a NASA phone or 216–433–8888 from a cell phone.

  At Plum Brook Station, call 911 from a NASA phone or 419–621–3222 from a cell phone.

- If a fire extinguisher is discharged at the hot work site the fire watch shall:
  - At Lewis Field notify Emergency Dispatch by dialing 911 from a NASA phone or 216–433–8888 from a cell or pay phone. At Plum Brook notify Emergency Dispatch by dialing 911 from a NASA phone or 419–621–3222 from a cell phone.
  - Notify a supervisor or appropriate NASA manager.

- Contact SHeD for Mishap Report directions. (Refer to the Glenn Safety Manual, Chapter **21**, Mishap and Close Call Reporting, Investigating and Recordkeeping for more information.)

5.6 Supervisor shall

- Provide required personal protective equipment to the worker performing hot work.
- Establish designated areas for cutting and welding and coordinate permitting with SHED.

5.7 Dispatch shall

- Log all notifications of hot work activities starting and completing within their log books.

6.0 REQUIREMENTS

6.1 Program Requirements (*NASA STD 8719.11*)

- Welding, cutting, and open flame operations conducted outside a designated welding/hotwork shop shall require a permit issued by SHeD.
- Designated welding/hotwork shops must have their hotwork permit reviewed annually by SHeD.
- The requester shall ensure a fire watch is provided on all welding, cutting, open flames, and other hot work requiring a permit. The fire watch shall have no other duties or responsibilities while performing the duties of the fire watch unless they meet the requirements of the Hot Work Pre-Operation Checklist (NASA **C–7B**), Fire Watch Requirements.
- When fire systems are required to be deactivated for welding, cutting, open flames, or other hot work, it is imperative that the systems be turned back on as soon as possible.
- The permit location of welding, cutting, open flames or other hot work shall not be changed or altered.
- Whenever changes are made that either alter the permitted area, require new processes to be introduced into the area, or cause relocation to a different site, a new permit shall be issued.
- Use of tar pots shall require a Hot Work Authorization Permit issued by SHeD.
- Tar pots shall not be located within 20 ft of a facility or shall be protected from the facility by a barrier standing 4 ft above and to all sides of the pot that are exposed to the building.
- At a minimum, rope barriers shall be provided to keep unrelated personnel 20 ft from the tar pot.
- The tar pot operator shall verify that the lid will close tight, and the tar pot will be constantly attended from 30 min prior to operations until 30 min after operations.
- Asphalt kettles shall not be located within 20’ of any combustible materials, combustible building surface or any building opening and within a controlled area identified by the use of traffic cones, barriers or other approved means.
- Asphalt kettles shall not block means of egress, gates, roadways, or entrances.
- Location of fuel containers for asphalt kettles shall be at least 10’ from the burner.
- An operating asphalt kettle shall be attended by a minimum of one knowledgeable employee of operations and hazards. The employee shall be within 100’ of the kettle and within sight of the kettle at all times.
- There shall be a portable fire extinguisher of a minimum 40 BC rating within 25’ of each asphalt kettle and one portable extinguisher with a minimum 3A 40BC rating on the roof being covered.
- Whenever a fire suppression system is removed from service for a period in excess of 4 hr, the NASA Authority Having Jurisdiction shall be notified in writing, and an approved fire protection system impairment plan or procedure shall be implemented.

These requirements will be validated by SHeD during periodic hot work inspections. The results of these inspections shall be documented within SHETrak.

6.2 Program Requirements (*29 CFR 1910 and 29 CFR 1926*)

- All combustibles shall be relocated at least 35 ft from the worksite. Where relocation is impracticable, combustibles shall be protected with flameproof covers or otherwise shielded.
- Before hot work is performed, the requester shall inspect the workarea and provide written authorization. This is documented on the Pre-Operations Hot Work Checklist (NASA **C–7B**).
- Appropriate personal protective equipment shall be worn during hot work operations.
- Appropriate local exhaust ventilations will be applied to prevent exposure to welding fumes.

These requirements will be validated by SHeD during periodic hot work inspections. The results of these inspections shall be documented within SHETrak.

6.3 Program Requirements (NFPA 51B)

- All hot work fabrics (Welding blankets, welding curtains and/or welding pads) shall be listed, approved or the equivalent for such use. One such listing is ANSI/FM 4950, which requires any fabric used for welding protection shall have its rating printed on the fabric in addition to "Uses and Limitations" labels as per the certifying body's requirement.

These requirements will be validated by SHeD during periodic hot work inspections. The results of these inspections shall be documented within SHETrak.

6.4 Training Requirements (*NASA STD 8719.11and 29 CFR 1910*)

- Permitting officials, fire watches, welders, and their apprentices shall be familiar with and trained to the requirements of NFPA 51 B, 29 CFR 1910.252, and 29 CFR 1910.253. SATERN course number **GRC-4R1728**
- Shall be trained annually in the use of the appropriate fire extinguishing (29 CFR 1910.157). SATERN course number GRC-4R1400.

7.0 RECORDS

- Hot Work Authorization Permit (NASA **C–7A**).—Maintained by SHED.
- Pre-Operations Hot Work Checklist (NASA **C–7B**).—Maintained by SHED.
- SHeD Inspections are maintained in the SHeD Safety, Health and Environmental Tracking System (SHETrak).

8.0 REFERENCES

Document Number	Document Name
29 CFR 1910	Occupational Safety and Health Standards
29 CFR 1926	Safety and Health Regulations for Construction
ANSI Z49.1	American National Safety Institute, Safety in Welding, Cutting and Allied Processes, 2005
NPR 8715.3	NASA Procedural Requirements, General Safety Program Requirements

STD 8719.11	NASA Technical Standards, Safety Standard for Fire Protection
NFPA 51B	National Fire Protection Association, Standard for Fire Prevention during Welding, Cutting and Other Hot Work, 2009
ANSI /FM 4950	Evaluating Welding Pads, Welding Blankets and Welding Curtains for Hot Work Operations
GLM–QS–1800.1	Occupational Health Programs Manual, Chapter **5**, Lead
GLM–QS–1700.1	Glenn Safety Manual, Chapter **21**, Mishap and Close Call Reporting, Investigating, and Recordkeeping

APPENDIX A.—DEFINITIONS AND ACRONYMS

American National Safety Institute (ANSI)

Code of Federal Regulations (CFR)

Construction of facilities (C of F).—Designated projects managed by the Facilities Division for the repair, rehabilitation, and modification of existing facilities; the construction of new facilities; compliance and restoration activities; the design of facility projects; and advanced planning related to future facility needs.

Designated hot work/weld shop area.—Specific area equipped to provide safe and hazard controlled space for ongoing hot work/welding operations. Welding curtains, warning signs, and fixed local exhaust ventilation are typical of these designated areas.

Fire watch.—An individual assigned to be in an area for the express purpose of preventing a fire from occurring, extinguishing small fires, protecting other individuals from fire or life safety dangers, and notifying appropriate personnel in case of an emergency. This individual cannot be the worker performing the hot work unless they meet the requirements of the Hot Work Pre-Operation Checklist (NASA C–7B), Fire Watch Requirements.

Glenn Research Center (GRC)

Hot work.—all heat, spark, or flame-producing operations including cutting, welding, Thermite welding, brazing, soldering, grinding, thermal spraying, thawing pipe, torch-applied roofing, or any other similar situation.

Hot Work Authorization Permit (NASA C–7A).—the document used to assure that hot work operations are carried out in a safe and controlled manner. The Hot Work Authorization Permit represents the first step in conducting a hot work operation.

Hot Work Pre-Operation Checklist (NASA C–7B).—the list is a mechanism for verification of the required precautions to be taken and for the establishment of the needed fire watch for the required duration.

NASA Policy Directive (NPD)

NASA Procedural Requirement (NPR)

National Fire Protection Association (NFPA)

Requester.—the person or organization that needs the hot work completed; coordinates all hot work activities for a given task.

Safety and Health Division (SHeD)

Safety and Mission Assurance Directorate (SMAD)

Welding Blanket.—a heat-resistant fabric designed to be in the vicinity of a hot work operation. Intended for use in horizontal applications with light to moderate exposures.

Welding Curtain.—a heat-resistant fabric designed to be placed in the vicinity of a hot work operation. Intended for use in vertical applications with light to moderate exposures.

Welding Pad.—a heat-resistant fabric designed to be placed directly under hot work operations. Intended for use in horizontal applications with severe exposures.

Contents

1.0 PURPOSe 2
2.0 APPLICABILITY 2
3.0 BACKGROUnd 2
4.0 POLICY 2
5.0 RESPONSIBILITIES 2
5.1 Requester 2
5.2 Safety and Health Division 2
5.3 Facilities Division (FD) 2
6.0 REQUIREMENTS 2
6.1 Emergency Barricading 2
6.2 Research Barricading 3
6.3 Construction Barricading (*29 CFR 1926* and Ohio Manual on Uniform Traffic Control Devices 2012) 3
6.4 Temporary Barricading 3
6.5 Barricade Plan 3
6.6 Barricading Materials 3
6.7 Removal 3
6.8 Crossing Barricades 3
7.0 RECORDS 3
8.0 REFERENCES 3
APPENDIX A .—DEFINITIONS AND ACRONYMS 4

Chapter 29—Safety Barricades

***NOTE:** The current version of this chapter is maintained and approved by the Safety and Health Division (SHeD). The last revision date of this chapter was June 2012. The current version is located on the Glenn intranet at http://smad-ext.grc.nasa.gov/shed/pub/gsm/gsm-manual.pdf. Approved by Chief of Safety and Health Division.*

1.0 PURPOSE

This chapter addresses the policies and procedures to be followed for all barricading within the boundaries of the Glenn Research Center (GRC). It includes what types of barricades are used and who the responsible parties are for each type.

2.0 APPLICABILITY

This chapter is applicable to all civil servant and contractor employees assigned to GRC sites and to any NASA-controlled, Government-owned facilities associated with GRC. The provisions also apply to the interior and exterior of GRC facilities where safe passage through, and emergency egress from, occupied areas must be maintained.

3.0 BACKGROUND

Planning, coordination, and placement of barricades such as colored tape, flagging, orange pylons (cones), and sawhorse barricades, etc., are used to cordon areas that are hazardous or to channel pedestrian and vehicle traffic to specific routes. The use of barricades facilitates activities involving traffic, construction projects, public events, and any situation in which an area must be temporarily marked to communicate a hazard or traffic route.

4.0 POLICY

It is the intent of GRC to protect all workers and visitors through the use of controls in hazardous areas to the extent of the severity of the hazard. These engineering controls include barricades of temporary and permanent utility (with appropriate signage when applicable), and shall be used to prevent access to these hazardous areas. Barricades necessary in nonhazardous areas for the day-to-day operations of the Center shall also follow this policy.

5.0 RESPONSIBILITIES

5.1 Requester

Submit a request based on the procedures listed in Section **6.0**. This will normally include completing a NASA **C–136**, Barricading Request, and a barricade plan, which includes locations, a map illustrating the detail as to how and where barriers will be erected, and dates for when barriers need to be installed and removed. After C-136 is approved by SHeD the requestor submits work request to FD.

5.2 Safety and Health Division

Review and approve barricade requests and plans. Inspect barricade site. Ensure accessibility per ADA and order adjustments if needed to increase safety and address hazards.

5.3 Facilities Division (FD)

Provide barricade support through the use of support contracts and the work-scheduling process. The FD road closure coordinator shall coordinate road closures with construction projects, bus routes, etc.

6.0 REQUIREMENTS

6.1 Emergency Barricading

Emergency barricading will be done exclusively by the Emergency Response Team (ERT), responding emergency agencies, or by a contractor designated by the ERT, to control a specific area(s) of hazardous nature, or to prevent employees from entering an unsafe/hazardous area.

6.2 Research Barricading

Barricading associated with research operations shall be submitted and reviewed as part of the safety permit process. See Glenn Safety Manual, Chapter **1A**, for further information.

6.2 – Verified by chapter lead reviews the C-136 with drawing and safety permit.

6.3 Construction Barricading (*29 CFR 1926* and Ohio Manual on Uniform Traffic Control Devices 2012)

Barricading associated with construction activities shall be reviewed as part of the Construction of Facilities (CoF) design process and/or during the review of the Health and Safety Plan. All barricading shall comply with 29 CFR 1926.200 and the Manual on Uniform Traffic Control Devices. See the Glenn Safety Manual, Chapter **17**, for more information.

6.3 – Refer to chapter 17 of the Glenn Safety Manual.

6.4 Temporary Barricading

This refers to barricading used for tours, Social Events , conferences, parking details, special events, etc. The requestor shall submit a NASA **C–136** to SHED for review and approval. After SHeD approval is received, the requestor will initiate work request with Facilities Division for the setup and removal of the barricades.

6.4- Verified by chapter lead upon site inspection.

6.5 Barricade Plan

The NASA **C–136** shall be submitted with a barricade plan attached. This plan shall include the locations and a map illustrating details including when, how, and where barricades will be erected. The barricading request form shall be submitted to SHED for review and approval.

6.5 – Verified by chapter lead by reviewing the C-136 and drawings.

6.6 Barricading Materials

The Center uses appropriate colored tape, flagging, orange pylons (cones), and/or other approved materials to accomplish designation of hazardous and reserved areas. See Glenn Safety Manual Chapter, 19 Section 6.3 for barricading materials details.

6.7 Removal

All nonemergency barricading shall be removed no later than 24 hours after use.

6.8 Crossing Barricades

For personal safety, all barricades shall not be crossed. If there is a need to access an area, which is barricaded, permission shall be obtained from the building manager or area supervisor.

7.0 RECORDS

- NASA **C–136**, Work Order Request for Barricade review.—Maintained by SHeD.

8.0 REFERENCES

Document number	Document name
29 CFR 1926	29 CFR 1926 Subpart G, Signs, Signals and BarricadeOhio MUTCD–2012 Ohio Manual on Uniform Traffic Control Devices - 2012

APPENDIX A.—DEFINITIONS AND ACRONYMS

Construction of Facilities (CoF)

Emergency Response Team (ERT)

Facilities Division (FD)

Safety and Health Division (SHeD)

American Disability Act (ADA)

Contents

1.0 PURPOSE....2
2.0 APPLICABILITY....2
3.0 BACKGROUND....2
4.0 POLICY....2
5.0 RESPONSIBILITIES....2
5.1 Safety and Health Division Chief....2
5.2 Authority Having Jurisdiction....3
5.3 Supervisors....3
5.4 All GRC Employees....3
6.0 REQUIREMENTS....3
6.1 AHJ Requirements....3
6.2 SHeD Requirements....4
6.3 Shared Requirements....5
7.0 RECORDS....5
8.0 REFERENCES....5
APPENDIX A.—DEFINITIONS AND ACRONYMS....6

Chapter 31—Fire Protection

Note: The current version of this chapter is maintained and approved by the Safety and Health Division (SHeD). The last revision date of this chapter was May 2012. The current version is located on the Glenn Research Center intranet at http://smad-ext.grc.nasa.gov/shed/pub/gsm/gsm-manual.pdf. *Approved by: Chief of Safety and Health Division.*

1.0 PURPOSE

This chapter addresses Glenn Research Center (GRC) policy guidance for fire protection provisions to prevent loss of life, property, and research capability. The Safety and Mission Assurance Directorate (SMAD) is committed to operate in a manner to ensure a fire-safe work environment.

2.0 APPLICABILITY

The provisions of this chapter are applicable to all NASA employees and to all other agencies, organizations, and contractor personnel, who design, construct, inspect, operate, maintain, or manage facilities or systems within the confines of the GRC at Lewis Field and Plum Brook Station.

3.0 BACKGROUND

Fire protection of facilities and occupants is an extremely critical aspect of living and working in today's society. Through comprehensive inspections and training of the facilities and occupants, GRC will provide a fire-safe environment to work.

4.0 POLICY

It is the GRC management policy that a fire protection program be established and implemented in accordance with NASA STD (Standard) 8719.11A, November 2008, "Safety Standard for Fire Protection." Fire protection support activities are conducted in compliance with fire safety standards, NASA directives and regulations, and general industry practices, and in a manner appropriate for the associated hazards.

5.0 RESPONSIBILITIES

Fire safety is an integral part of the overall Glenn Safety Program. The fire safety program cuts across multiple organizations. These organizations share responsibility in implementing a comprehensive fire safety program. The subsections below identify these responsibilities.

5.1 Safety and Health Division Chief

The Safety and Health Division (SHeD) Chief shall have the overall management responsibility for planning, directing, and executing a comprehensive fire protection program composed of the following elements:

- Hot work program
- Building safety (fire) inspections
- Control of flammable and combustible materials
- Fire safety training
- Emergency action planning
- Pre-fire (incident) planning
- Fire (mishap) investigation

- Audit the fire protection inspection, testing, recordkeeping and maintenance programs
- Coordination of activities with outside fire departments
- General fire code enforcement

5.2 Authority Having Jurisdiction

Authority having jurisdiction (AHJ) is a title assigned to an individual having the final say on compliance concerns in regards to fire protection. The AHJ shall be designated by the Center Director in writing. The AHJ shall have specific responsibilities to implement a fire protection engineering program that is composed of the following elements:

- Development of annual facility fire risk assessments
- Advocacy for fire protection improvements through the construction of facilities (CoF) and institutional facilities processes
- Life-cycle review of fire protection systems
- Verify and witness acceptance testing of fire protection systems
- Interpretation of national consensus model fire and building codes and related standards and guidelines
- Review of construction documents for fire safety requirements
- Review of alternately compliant arrangements not in strict accordance with the prescriptive measures of the local building codes, where a performance-based design has been implemented
- Review of facility design drawings for inclusion of adequate fire protection features and systems and for compliance with applicable codes and criteria
- Issuing building occupancy certificates
- Agency-wide point of contact as “Fire Protection Coordinator” as a liaison to NASA Headquarters
- Oversight of fire protection, prevention, and response programs implemented by partner organizations for compliance with NASA Agency requirements
- General building code compliance
- Annual briefing of Center Director’s office on state of the overall fire safety program
- Will assist the mechanical systems manager and protective systems manager in engineered fire protection solutions.

5.3 Supervisors

Supervisors shall be responsible for maintaining their operations in a fire-safe manner and in accordance with the requirements of this chapter and the policies of SHeD.

5.4 All GRC Employees

All employees at GRC shall be responsible for understanding and conforming to the policies, fire-safe practices, and provisions of this chapter.

6.0 REQUIREMENTS

The fire protection program is intended to provide and maintain a level of fire protection at GRC that meets and/or exceeds the objectives and criteria stated in the NASA STD 8719.11A, November 2008, “Safety Standard for Fire Protection.” Program objectives are described in the following paragraphs.

6.1 AHJ Requirements

- AHJ shall facilitate an ongoing program of fire hazard risk assessment surveys of critical or hazardous or highly populated facilities to identify fire safety deficiencies.

- The AHJ shall serve as the advocate for correcting fire protection deficiencies via locally funded and CoF projects.
- The AHJ shall assist in ensuring the adequacy of designs from a fire code compliance, contractual, and cost benefit standpoint for major construction projects. This will be accomplished through an established fire protection design review process.
- AHJ shall review facility design drawings to ensure adequate fire protection features and systems are included and are compliant with applicable codes. Design requirements shall provide an acceptable degree of life safety to facility personnel and a reliable water supply and water supply system (source, pumps, valves, and hydrants) of sufficient capacity for the maximum credible fire. The requirements will achieve these goals by developing and maintaining Facility Hazard Assessments (FHAs) for new facilities and by providing automatic suppression and detection systems in all areas at risk for serious property damage and/or program interruption.
- AHJ shall be selected and designated in writing by the Center Director. The AHJ shall meet one of the following as minimum requirements:
    1. Shall have a degree in fire protection engineering, shall be registered in the State of Ohio as a professional engineer (PE) and shall have trade certification with the State of Ohio or the International Code Council as a building official or as a fire inspector. Shall have a minimum of 5 years experience in performing fire protection engineering, fire risk assessments and facility safety inspection.
    2. Shall have a degree in any area of engineering, shall be registered in the State of Ohio as a professional engineer (PE) and shall have trade certification with the State of Ohio or the International Code Council as a building official or as a fire inspector. Shall have a minimum of 10 years experience in performing fire protection analysis, fire risk assessments and facility safety inspection.
    3. Shall have a masters degree in any area of industrial safety, industrial management or environmental science, shall be registered with the Board of Certified Safety Professionals as a Certified Safety Professional (CSP) and shall have trade certification with the State of Ohio or the International Code Council as a building official or as a fire inspector. Shall have a minimum of 15 years experience in performing fire protection analysis, fire risk assessments and facility safety inspection.
- AHJ shall appoint an individual to perform a fire inspection report of cause and origin per National Fire Protection Association (NFPA) 921 for every fire incident. This report shall be part of the interim response team effort and shall be made available to the AHJ, the SHeD Chief, and any mishap investigator, board, or team. The person performing the investigation shall be certified as a Certified Fire Investigator or Certified Fire and Explosion Investigator or hold a State of Ohio certification in fire investigation.

6.1 Verification of compliance with these requirements is done by the Facilities Division during periodic evaluation and audits.

6.2 SHeD Requirements

- SHeD shall appropriately review and correct fire safety violations by a formal fire protection design review process to facilitate fire protection and life safety deficiency resolution in the earliest design phases of processes or research that takes place. SHeD will designate the review person or committee as appropriate, when requested by the project team. This process will aid in preventing vital programs or projects from suffering unacceptable delays as a result of fire or its perils.
- SHeD shall develop plans for the control of flammable materials and hazardous operations to ensure that fire does not cause a release of hazardous material that may threaten public health and safety or the environment, which will be addressed through the design review process and the safety permit process.
- SHeD shall be responsible for implementing an aggressive facility inspection program. This inspection program will assure a fire prevention program for the control of housekeeping, combustible loading, hot work operations, hazardous materials, and ignition sources such as smoking and portable heating devices.

- SHeD and the Glenn Emergency Management Coordinator and the local fire department shall discuss routine and unique hazards at GRC and appropriate responses.
- SHeD shall report and investigate all fires per the requirements of NASA STD 8719.11A, November 2008. All investigations and reports shall be coordinated with the appointed Fire Investigator as defined in 6.1 of this Chapter when applicable.
- SHeD shall be responsible for ensuring compliance with local, state, and Federal law and National codes and criteria for fire protection, implementation of operational fire protection devices, and for directing fire protection technical support to projects and operations, which will all be addressed through the design review process.

6.2 Verification of compliance with these requirements is done by SHeD during periodic evaluation and audits.

6.3 Shared Requirements

- SHeD and the AHJ shall work in conjunction to ensure implementation of a comprehensive fire safety program. Though each organization has primary responsibility for specific elements of the program, each will work together to ensure that all requirements are met. SHeD shall be responsible primarily for fire prevention and fire code enforcement similar to a city's Fire Prevention Official. The AHJ shall be primarily responsible for technical oversight and engineering similar to a city's Building Official and Fire Marshal.

7.0 RECORDS

Reports and documentation of corrective actions from building inspections.— Maintained by SHeD.

FHAs and design reviews.—Maintained by the Facilities Division.

8.0 REFERENCES

Document Number	Document Name
NASA STD 8719.11A, November 2008	Standard for Fire Protection
NPR 8715.3C	NASA Safety Program Requirements
GLM–QS–1700.1	NASA Glenn Safety Manual, **Oxygen** Chapter **5**
National Fire Protection Association (NFPA)	Fire Codes and Standards

APPENDIX A.—DEFINITIONS AND ACRONYMS

Authority having jurisdiction (AHJ)

Construction of Facilities (CoF)

Facility Hazard Assessment (FHA)

Glenn Research Center (GRC)

National Fire Protection Association (NFPA)

Safety and Health Division (SHeD)

Safety and Mission Assurance Directorate (SMAD)

Standard (STD)

Contents

1.0 PURPOSE 2
2.0 APPLICABILITY 2
3.0 BACKGROUND 2
4.0 POLICY 2
5.0 RESPONSIBILITIES 2
5.1 Center Director 2
5.2 Chief of the Safety and Health Division 2
5.3 Supervisors 3
5.4 Employees 3
6.0 REQUIREMENTS 3
6.1 Housekeeping 3
6.2 Material Storage 3
6.3 Slips, Trips, and Falls 4
6.4 Strains and Overexertion 5
6.4.1 Safe Lifting Steps 5
6.5 Caught in or Between Objects 6
6.6 Office Ergonomics (*Chapter 15*) 6
6.7 Office Electrical Safety 6
6.7.1 Ungrounded Equipment 6
6.7.2 Overloaded Outlets 7
6.7.3 Unsafe and Unapproved Equipment 7
6.7.4 Improper Placement of Cords 7
6.7.5 Extension Cords 7
6.7.6 Unguarded Live Parts 7
6.7.7 Power Control Switches 8
6.8 Office Fire Prevention 8
7.0 RECORDS 8
8.0 REFERENCES 8
APPENDIX A .—DEFINITIONS AND ACRONYMS ..... **Error! Bookmark not defined.**

Chapter 32—Office Safety

NOTE: *The current version of this chapter is maintained and approved by the Safety and Health Division (SHeD). The last revision date of this chapter was October 2012. The current version is located on the Glenn Research Center intranet at http://smad-ext.grc.nasa.gov/shed/pub/gsm/gsm-manual.pdf. Approved by Chief of Safety and Health Division.*

1.0 PURPOSE

Office safety encompasses the responsibilities, regulation, and requirements that ensure a safe working environment for personnel in an office setting at the NASA Glenn Research Center (GRC). This chapter sets forth minimum safety requirements and guidelines to prevent accidents for all personnel performing administration-related tasks.

2.0 APPLICABILITY

The provisions of this chapter are applicable to all NASA employees and to all other agencies, organizations, and contractor personnel who perform administrative duties or work in an office setting within the confines of the Center at Lewis Field in Cleveland and at Plum Brook Station in Sandusky.

3.0 BACKGROUND

Changes have occurred in the American workplace because of the new office technology and the automation of office equipment. As with all new technology, these changes bring with them a set of health and safety concerns. In addition to obvious hazards such as slippery floors or an open file drawer, a modern office may contain hazards such as poor lighting, noise, poorly designed furniture, and equipment and machines that emit gases and vapors when not properly maintained. Even the nature of office work has produced a whole host of stress-related symptoms and musculoskeletal strains. For example, long hours at a poorly designed computer workstation can cause pain in the neck, back, shoulders, lower extremities, arms, wrists, and hands; eyestrain; and a general feeling of tension and irritability. The leading types of disabling accidents that occur in the office are the result of falls, strains and overexertion, falling objects, striking against objects, and being caught in or between objects.

4.0 POLICY

GRC will manage and conduct its operations in such a manner as to eliminate or minimize all potential hazards and to avoid accidents involving injury to personnel, damage to property, or loss of research or project operating time or effectiveness. GRC management and supervisors are responsible for ensuring that everyone is provided with a workplace free of recognized hazards, or one that has appropriately engineered protective systems, and that GRC complies with all applicable Federal, State, local, and contractual laws and regulations affecting the safety and health of Center employees. Everyone at GRC, including contractors, has an obligation and a responsibility to comply with laws, regulations, and practices affecting personnel and facility safety, including those set forth in the Glenn Safety Manual. Achieving and maintaining a safe work environment requires that everyone cooperates and proactively participates in the Glenn Safety Program.

5.0 RESPONSIBILITIES

5.1 Center Director

The Center Director is responsible for establishing a GRC safety and accident prevention program in accordance with Federal regulations, the NASA Safety Manual, NPR **8715.3**, and other related guidelines set up by NASA Headquarters.

5.2 Chief of the Safety and Health Division

The Chief of the Safety and Health Division (SHeD) shall be responsible for the overall management, coordination, and documentation of the Glenn Safety Management System and, in conjunction with the Safety, Health and Environmental Board, for the implementation of Center safety policies and directives. The Chief of the Operational Safety Branch serves as the Center focal point of communications on all life safety matters and on functional safety relationships between the Center and NASA Headquarters. (See Chapter **1** of the Glenn Safety Manual for additional information.)

5.3 Supervisors

All organization supervisors have a prime responsibility for complying with pertinent safety requirements, (including those related to housekeeping), ensuring the effectiveness of the Glenn Safety Management System as it affects their specific activities, possessing knowledge of GRC safety regulations, safe operating procedures, and emergency response procedures, communicating that knowledge to their employees, and identifying and correcting potentially hazardous conditions.

5.4 Employees

Each GRC and contractor employee is responsible for

- Exercising reasonable care and caution in the safe performance of his or her work by reducing potential hazards while performing his or her assignments and in the conduct of any activity at the Center.
- Possessing knowledge of GRC safety regulations, safe operating procedures, and emergency response procedures affecting his or her individual work area and work assignments, and complying therewith.
- Reporting the development or appearance of any potentially hazardous condition to his or her supervisor and/or to the NASA Incident Reporting Information System (IRIS).

6.0 REQUIREMENTS

6.1 Housekeeping

All NASA employees and contractor personnel are responsible for reducing potential hazards and keeping their work areas safe and clutter free. **Many office accidents are caused by poor housekeeping practices.** Good housekeeping guidelines include keeping aisles and stairways free from clutter, cleaning spills, minimizing combustibles in workplace and storage areas, and keeping all exits free from obstructions. By keeping the office floor neat and clean, personnel can eliminate most slip, trip, and fall hazards. Other good housekeeping practices to follow:

- Maintain walkways so that everyone can enter and exit without tripping over items.
- Ensure that office lighting is adequate.
- Quickly clean or barricade spills to prevent slips, trips, and falls; never walk on wet floors.
- Report any loose or worn flooring to the Work Control Office at 216–433–4948 at Lewis Field or at 419–621–3200 at Plum Brook Station. Repair requests can also be generated by the requester at the MAXIMO Website.
- Maintain emergency egress paths at a minimum of 32 in. per the National Fire Protection Association (NFPA 101, Life Safety Code) and the Ohio Department of Commerce:

  "Exit access aisles and passageways shall provide a minimum of 32 inches (813 mm) of clear width. Exceptions may be made where approved in writing by the Authority Having Jurisdiction for exit access aisles and passageways serving less than 20 people based upon guidance from NFPA 101 and the Ohio Fire Code."
- Ensure that loose paper (which increases the fire load and the fire potential in the office area) does not accumulate to an excessive amount. Loose paper is defined as any paper sitting open on desktops, cabinets, and shelving. Instead, paper should be stored inside approved file cabinets, bookcases, or cabinets designed for that purpose, (such as Laterals). Also, paper and/or cardboard boxes should not be stored on the floor in office areas.

6.1– The SHeD verification procedure which ensures compliance with the requirement listed in this section is accomplished by regularly scheduled Facilities Safety and Health Inspections performed by SHeD.

6.2 Material Storage

Improperly stored office materials can lead to objects falling on workers, poor visibility, and fire hazards. Improper storage includes disorderly piling; piling materials too high; and obstructing doors, aisles, fire exits, and fire-fighting

equipment. A good housekeeping program will reduce or eliminate the hazards associated with the improper storage of materials. The following are good storage practices:

- The egress route must be accessible, with no storage of materials in aisles, corners, stairwells, or passageways.
- Books should be kept on shelving or neatly stored.
- No loose storage should be placed above 6 ft or on top of cabinets.
- Heavy (hard to lift or move) objects should be located on low shelving.
- Cardboard boxes shall not be used for permanent storage.
- No laboratory chemical storage is permitted in office areas. For additional information, consult the HAZCOM Program.

6.2 The SHeD verification procedure which ensures compliance with the requirement listed in this section is accomplished by regularly scheduled Facilities Safety & Health Inspections, Chemical Management Inspections performed by SHeD.

6.3 Slips, Trips, and Falls

Falls are the leading type of disabling accidents that occur in the office. The disabling injury rate of falls among office workers is 2 to 2.5 times higher than the rate for non-office employees. A fall occurs when you lose your balance and footing. One of the most common causes of office falls is tripping over an open desk or file drawer. Bending while seated in an unstable chair and tripping over electrical cords or wires are other common hazards. Office falls are frequently caused by using a chair or stack of boxes in place of a ladder and by slipping on wet floors. Loose carpeting, objects stored in halls or walkways, and inadequate lighting are other hazards that invite accidental falls. Fortunately, all of these fall hazards are preventable. The following checklist can help stop a fall before it happens:

- Quickly clean or barricade spills.
- Never walk on wet floors.
- Keep carpeting in good condition to prevent trip hazards. Report any loose or worn flooring to the GRC Work Control Office at 216–433–4948 at Lewis Field or 419–621–3200 at Plum Brook Station. Any repair request can be accommodated by accessing the MAXIMO Website.
- Be sure the pathway is clear before you walk.
- Avoid excessive bending, twisting, and leaning backward while seated.
- Always use a stepladder for overhead reaching. Never use a chair as a ladder.
- Pick up loose objects on the floor.
- Do not obstruct your view when carrying objects along walkways or when ascending or descending stairways.
- Wear footwear appropriate for your duties. High heels and sandals, or other open-toe shoes, are not permitted in shop or lab areas and are discouraged in office areas.
- File cabinet safety
    - Store the heaviest materials in the bottom drawer.
    - Never leave the upper drawers of a file cabinet open.
    - Open only one drawer at a time.
    - Never open a drawer if someone is crouched below it.
    - Shut a file drawer immediately after removing files.
    - Use the handle when closing a drawer to help reduce pinch-point injuries.

If you find yourself heading for a fall, remember to roll, not reach. By letting your body crumple and roll, you are more likely to absorb the impact and momentum of a fall without injury. Reaching an arm or leg out to break your fall may result in a broken limb.

6.3 The SHeD verification procedure which ensures compliance with the requirement listed in this section is accomplished by regularly scheduled Facilities Safety & Health Inspections and Ergonomic follow-ups performed by SHeD, and Work Practice Controls utilized by the Maintenance sector of the Facilities Division.

6.4 Strains and Overexertion

Although a typical office job may not involve lifting large or especially heavy objects, it is important to follow the principles of safe lifting. Small, light loads, (e.g., stacks of files, boxes of computer paper, or books), can wreak havoc on your back, neck, and shoulders if you use your body incorrectly when you lift them. Backs are especially vulnerable; most back injuries result from improper lifting. Before you pick up a carton or load, ask yourself these questions:

- Is this too heavy for me to lift and carry alone?
- How high do I have to lift it?
- Is there enough room to safely lift and maneuver it?
- How far do I have to carry it?
- Am I trying to impress anyone by lifting this?

If you feel that the lift is beyond your ability, contact your supervisor, use appropriate material-handling equipment, or ask another employee to assist you.

6.4 - The SHeD verification procedure which ensures compliance with the requirement listed in this section is found in the NIOSH Work Practices Guide.

6.4.1 Safe Lifting Practices

Use the following steps to safely lift an object:

1. Take a balanced stance, with feet placed shoulder-width apart. When lifting something from the floor, squat close to the load. Do not manually lift over 50 lb by yourself.
2. Keep your back in its neutral or straight position. Tuck in your chin so your head and neck continue the straight back line.
3. Grip the object with your whole hand, rather than only with your fingers. Draw the object close to your body to keep the load and your body weight centered.
4. Lift by straightening your legs. Let your leg muscles, not your back muscles, do the work. Tighten your stomach muscles to help support your back. Maintain your neutral back position as you lift.
5. Never twist when lifting. When you must turn with a load, turn your whole body, feet first.
6. Never carry a load that blocks your vision.
7. To set something down, use the same body mechanics designed for lifting.

6.4.1 - The SHeD verification procedure which ensures compliance with the requirement listed in this section is found in the NIOSH Work Practices Guide for manual lifting.

6.5 Caught in or Between Objects

Disabling incidents can occur when office workers get their fingers or articles of clothing caught in or between objects:

- Fingers caught in a drawer, door, or window
- Fingers, hair, or articles of clothing and jewelry caught in office machines
- Fingers caught under the knife edge of a paper cutter

Office machines often have moving parts and "nip" points. It is critical to watch your fingers and to secure loose items, such as hair, clothing, badge lanyards, and jewelry. Office equipment should have proper covers or guards in place and must not be operated if the guards have been removed. Also, paper cutter blades should be locked in the down position after use.

6.5 - The SHeD verification procedure which ensures compliance with the requirement listed in this section is found in the NIOSH Work Practices Guide.

6.6 Office Ergonomics

Ergonomics is the science of designing the job, equipment, and workplace to fit the worker. It involves modifying or redesigning the job, workstation, tool, or environment. Proper ergonomic design is necessary to prevent repetitive strain injuries, which can develop over time and can lead to long-term disability. There are many warning signs that should alert an employee to a potential health problem. However, nothing replaces a physician’s diagnosis.

Computer use has increased dramatically over the past decade with over 50 million personal computers in use. Unfortunately, speed comes with a price—no breaks. When you think of office work, you think of upper-extremity Cumulative Trauma Disorders. However, eye strain is the most frequent physical symptom suffered by computer users, and an office worker is 40 times more likely to experience back pain than pain in an upper extremity. Although there has been an increase of severity and lost work days, the incidence for back pain has not changed significantly. Using ergonomics for workstation design can have a big impact on an office worker’s health and well-being.

6.6 - The SHeD verification procedure which ensures compliance with the requirement listed in this section is found in the Glenn Safety Manual, Chapter 15 – Ergonomics 5.3: Ergonomics Assessment Team.

6.7 Office Electrical Safety

Electricity is an essential power source for the operations of a modern automated office. The electrical equipment in the office is potentially hazardous and can cause serious shock and burn injuries if improperly used or maintained.

Electricity travels through any electrical conductor, which may be a wire or a part of the human body. Most metals and moist skin offer very little resistance to the flow of electrical current. Dry wood, porcelain, and pottery offer a high resistance and can be used to prevent the flow of electrical current. If a part of the body encounters an electrical circuit, a shock will occur. The electrical current will enter the body at one point and leave at another. The passage of electricity through the body can cause great pain; burns; destruction of tissue, nerves, and muscles; and even death.

Factors influencing the effects of electrical shock include the type of current, voltage, resistance, amperage, pathway through the body, and duration of contact. The longer the current flows through the body, the more serious the injury. Injuries are less severe when the current does not pass through or near nerve centers and vital organs. Electrical accidents usually occur because of faulty or defective equipment, unsafe installation, or misuse of equipment by office workers.

6.7 - The SHeD verification procedure which ensures compliance with the requirement listed in this section is accomplished by regularly scheduled Facilities Safety & Health Inspections performed by SHeD.

6.7.1 – **Ungrounded Equipment**

Grounding is a method of protecting employees from electric shock. Grounding an electrical system intentionally creates a low-resistance path to the earth through a ground connection. When properly done, this path offers sufficiently low resistance and has sufficient current-carrying capacity to prevent the buildup of hazardous voltages.

Most fixed equipment such as large, stationary machines must be grounded. Cord- and plug-connected equipment must be grounded if it is located in hazardous or wet locations, if it is operated at more than 150 V to ground, or if it is of a certain type of equipment (such as refrigerators and air conditioners).

Smaller office equipment, such as coffee pots and refrigerators would generally not fall into these categories and therefore would not have to be grounded. However, much of the newer office equipment is manufactured with grounded plugs as a precaution. In such cases, the equipment shall be used in accordance with the manufacturer's instructions. In any case, never remove the third (grounding) prong from any three-prong piece of equipment.

6.7.1 - The SHeD verification procedure which ensures compliance with the requirement listed in this section is accomplished by regularly scheduled Facilities Safety & Health Inspections performed by SHeD, and NESC 123.

6.7.1 Overloaded Outlets

Insufficient, or overloaded, electrical outlets shall be avoided. A sufficient number of outlets will eliminate the need for extension cords. Overloading electrical circuits and extension cords can result in a fire. Floor-mounted outlets should be carefully placed to prevent tripping hazards. Most power strips are approved for providing power to a maximum of four or six individual items. When multiple power strips are interconnected, the strip directly connected to the building outlet is often supplying power to far more than the approved number of items.

- Routinely check your electrical appliances and wiring.
- Frayed wires can cause fires. Replace all worn, old, or damaged cords immediately.
- Never overload extension cords or wall sockets.
- Never string multiple extension cords together.

  If an appliance has a three-prong plug, use it only in a three-slot outlet. Never force it to fit into a two-slot outlet or extension cord.

6.7.2 Unsafe and Unapproved Equipment

Fans, surge protectors, coffee pots, cup warmers, radios, personal heaters, and other personal electrical devices shall be Underwriters Laboratories, Inc. (UL) listed and used in accordance with the manufacturers' recommendations. When the outer jacket of a cord is damaged, the cord may no longer be water resistant. The insulation can absorb moisture, which could result in a short circuit or excessive current leakage to ground. If wires are exposed, they may shock a worker who contacts them. Defective cords shall be replaced. Electric cords should be examined on a routine basis for fraying and exposed wiring. For portable electric heaters, buy a unit with a tip-over safety switch, which automatically shuts off the heater if the unit is tipped over.

6.7.3 Improper Placement of Cords

An electrical cord shall not be pulled or dragged over nails, hooks, or other sharp objects that may cause cuts in the insulation. In addition, cords shall never be placed on radiators, steam pipes, walls, or windows. Particular attention should be placed on connections behind furniture, since files and bookcases may be pushed tightly against electric outlets, severely bending the cord at the plug. Cords also become tripping hazards when strung across walkways.

6.7.4 Extension Cords

Extension cords shall not be used in place of fixed wiring.

6.7.5 Unguarded Live Parts

Wall receptacles shall be designed and installed so that no current-carrying parts will be exposed. Outlet plates should be kept tight to eliminate the possibility of shock.

6.7.6 Power Control Switches

All office equipment shall be provided with on/off switches to control the electrical power.

> 6.7.2 – 6.7.7: The SHeD verification procedure which ensures compliance with requirements 6.7.2 through 6.7.7 listed in this section is accomplished by regularly scheduled Facilities Safety & Health Inspections performed by SHeD.

6.8 Office Fire Prevention

The best time to think about fire safety is before a fire starts. Learn the location of fire escape routes and how to activate the fire alarm. Participate in practice fire drills on a regular basis, and become familiar with stairway exits.

Heat-producing equipment, such as copiers, word processors, microwave ovens, refrigerators, electrical space heaters, and coffee makers are often overlooked as potential fire hazards. Keep them away from anything that might burn.

Electrical appliances can be fire hazards. Be sure to turn off all appliances at the end of the day. Use only UL-listed appliances plugged into grounded outlets (three-prong plugs).

If electrical equipment malfunctions or gives off a strange odor, disconnect it and call the appropriate maintenance personnel. Promptly disconnect and replace cracked, frayed, or broken electrical cords.

Do not allow combustible material, such as boxes or paper, to build up in inappropriate storage locations (near sources heat or ignition).

> 6.8 - The SHeD verification procedure which ensures compliance with the requirement listed in this section is accomplished by regularly scheduled Facilities Safety & Health Inspections performed by SHeD.

7.0 RECORDS

Inspections are compiled and maintained by SHeD via SHEtrak. .

8.0 REFERENCES

Document number	Document name
NPR **8715.3**	NASA General Safety Program Requirements
	GRC at Lewis Field and Plum Brook Station, Environmental, Health, and Safety Pocket Guide
	Office of Health and Safety, Centers for Disease Control and Prevention
NFPA 101	National Fire Protection Association Life Safety Code
	2007 Ohio Fire Code
GLM–QS–**1800.1**	Occupational Health Programs Manual

The Facility Safety and Health Inspection Program for LF and PBS is led by SHeD . It consists of quarterly or annual inspections of office buildings, test cells, laboratories, substations, cooling towers, and areas of potentially high hazard. The specific Inspections performed, (concerning this Chapter), are: Facilities Safety and Health, Chemical Management, and Environmental. Construction Inspections are also performed. Inspections are conducted by safety specialists trained to OSHA 30-hour general industry level or equivalent and fully conform to 29 (Code of Federal Regulations (CFR) 1960.2 standards. All findings are recorded into the SHEtrak program, and followed up to closure. This activity conforms to the inspection standards required by NPR **8715.1** Chapter 4, Inspection and Abatement.

DEFINITIONS OF ACRONYMS

Incident Reporting Information System (IRIS)

Glenn Research Center (GRC)

NASA Procedural Requirement (NPR)

National Fire Protection Association (NFPA)

Safety and Health Division (SHeD)

Underwriters Laboratories, Inc. (UL)

Safety, Health, and Environmental track, (SHEtrak)

Contents

1.0 PURPOSE 2
2.0 APPLICABILITY 2
3.0 BACKGROUND 2
4.0 POLICY 2
5.0 RESPONSIBILITIES 3
5.1 Supervisors *(Note: Supervisors can also refer to Work Leads, Area Leads, Forman, or whomever is assigning a job/ task.)* 3
5.2 Employees 3
5.3 Safety and Health Division (SHeD) 3
6.0 REQUIREMENTS (*Section 5 (a)(1) of the OSHA General Duty Clause*) 3
6.1 JHA Process 4
6.1.1 Employee Participation 4
6.1.2 Preliminary Job Review 4
6.1.3 Task Observation or Review 4
6.1.4 Documentation of Basic Steps 4
6.1.5 Hazard Identification and Evaluation 4
6.1.6 Hazard Controls 4
6.1.7 Review and Submit JHA 4
6.2 JHA Format and Content 4
6.3 Change Control 5
6.4 Training 5
6.4.1 General JHA Training 5
6.4.2 Task-Specific JHA Training 5
7.0 RECORDS 5
8.0 REFERENCES 6
APPENDIX A .—Definitions and Acronyms 7
APPENDIX B .—Common Hazards 8
APPENDIX C .—Hazards Control Measures 9

Chapter 33—Job Hazard Analysis

Note: *The current version of this chapter is maintained and approved by the Safety and Health Division (SHeD). The last revision date of this chapter was June 2012. The current version is located on the Glenn Research Center intranet at http://smad-ext.grc.nasa.gov/shed/pub/gsm/gsm-manual.pdf. Approved by the Chief of Safety and Health Division.*

1.0 PURPOSE

This chapter establishes procedures and practices for conducting Job Hazard Analysis (JHA) at the Glenn Research Center (GRC) Lewis Field and Plum Brook Station (PBS).

2.0 APPLICABILITY

The GRC JHA process is applicable to all civil servant, support service contractor (SSC), and contractor employees assigned to GRC sites and to any NASA-controlled, Government-owned facilities associated with GRC. It applies to any Center work activity or task that could potentially cause an accident, injury, or illness. A JHA should be developed for any work activity and task that

- Has resulted in multiple close calls, accidents, injuries, or illnesses
- Has the potential to cause severe or disabling injuries or illness, even if there has previously been no accident, injury, or illness
- Could lead to severe accident or injury from one simple human error
- Involves hazardous materials
- Involves hazardous energy sources
- Involves the use of personal protective equipment (PPE)
- Is new or has undergone changes in the process or procedures
- Is complex enough to require written instructions

3.0 BACKGROUND

Every job or task an employee performs exposes that employee to potential hazards that could result in accidents, injuries, or illnesses. Employees can reduce the likelihood of an accident, injury, or illness by eliminating or minimizing their exposure to these potential hazards.

JHAs help employees and supervisors identify the hazards associated with Center activities and tasks, assess the risk associated with these hazards, and control that risk to an acceptable level.

The overall goals of the JHA program are to prevent injuries and illnesses, reduce property damage, supplement existing safety requirements, and enhance employee training on new, existing, and modified tasks.

4.0 POLICY

This document describes JHAs at GRC. It describes the responsibilities of personnel who perform, use, and review JHAs and identifies the training recommended and required for all GRC operations involving JHAs. Adherence to this document helps ensure compliance with Glenn Safety Manual, Chapter **1**, Safety Management, and Section 5 (a)(1) of the Occupational Safety and Health Administration (OSHA) General Duty Clause.

5.0 RESPONSIBILITIES

5.1 Supervisors

(Note: Supervisors can also refer to Work Leads, Area Leads, Forman, or whoever is assigning a job/ task.)

GRC supervisors (including contractors) are responsible for

- Identifying and prioritizing activities and tasks within their area of responsibility for which JHAs should be developed
- Ensuring JHAs are developed, with/ by the participation of affected employees, for each activity or task
- Annually reviewing and/or updating applicable JHAs with affected employees
- Using SHeD as a resource to develop and review JHAs
- Completing general JHA training (recommended) or reference OSHA Publication 3071
- Ensuring that the appropriate employees in their organization receive general JHA training
- Providing task-specific JHA training to the appropriate people in the organization
- Maintaining task-specific JHA training records if formal training is held
- Revising existing and/or approved JHAs when any changes occur in the basic steps, hazards, or hazard controls
- Reviewing pertinent JHAs after an incident or close call is reported and updating them, as needed, to prevent a reoccurrence
- Evaluating the need for a JHA (where none exists) if an incident or close call is reported
- Continually ensuring that hazard controls documented in the JHAs are functional and being used properly
- Seeking assistance from SHeD, as needed, in completing JHAs

5.2 Employees

GRC employees are responsible for

- Participating in the development, population, and maintenance of a JHA
- Completing general and/or task-specific JHA training (recommended)
- Adhering to JHA documented controls
- Being vigilant of potential hazards not identified in the JHA and then notifying a supervisor

5.3 Safety and Health Division (SHeD)

SHeD is responsible for

- Assisting GRC organizations with JHA development
- Reviewing JHAs, if requested
- Providing general JHA training, when requested
- Updating the GRC JHA process, as necessary
- Assisting GRC organizations with industrial hygiene or safety issues that arise during the JHA process

6.0 REQUIREMENTS (*Section 5 (a)(1) of the OSHA General Duty Clause*)

6.1 - 6.3 - The SHeD verification procedure to ensure compliance with the requirements listed in this section, shall be accomplished by periodic audits and reviews of JHAs that are being populated at GRC.

6.1 JHA Process

6.1.1 Employee Participation

The supervisor shall involve employees that work in the area or are familiar with the task being assessed with the JHA process. Employees understand the activities and tasks they perform and are essential in identifying potential hazards. They are also helpful in identifying control measures to minimize or eliminate these hazards.

6.1.2 Preliminary Job Review

Supervisors and employees shall review the work tasks performed by the organization to determine if any meet the criteria listed in Section **2.0**. If any of the criteria are met, a JHA shall be developed for that task. If the task is reoccurring then the supervisor, or employee performing the work, should check to see if a JHA or documented procedure already exists for the task.

6.1.3 Task Observation or Review

The supervisor and employees shall observe the work task to understand how it is performed. Sometimes it is helpful to photograph or videotape the task. If the task does not yet exist, the supervisor and employees shall at least discuss the work task to determine how it might be performed.

6.1.4 Documentation of Basic Steps

After observing or reviewing the task, the supervisor and employees shall identify the basic steps of the task. Include enough information to evaluate the hazards associated with each step without getting overly detailed. The more people who review the task and the basic steps, the more complete the evaluation will be.

6.1.5 Hazard Identification and Evaluation

The supervisor and employees shall review each step and identify potential hazards, both unsafe acts and unsafe conditions. A list of common hazards is available in Appendix A of this chapter and in OSHA Publication 3071, "Job Hazard Analysis."

> ***Note:*** *The focus of the JHA process is on identifying unsafe acts, hazards, and conditions and controlling them to prevent or minimize accidents, injuries, illness, or property damage. This evaluation should not overly criticize the individual performing the task. During this exercise, ask questions like:*
>
> - *What can go wrong?*
> - *What are the consequences?*
> - *How could it happen?*
> - *What are other contributing factors?*
> - *How likely is it that the hazard will occur?*
> - *What control measures, if any, are currently in place?*

6.1.6 Hazard Controls

Once the hazards for each step are identified, the supervisor and employees shall identify existing or potential control measures that will eliminate or minimize the hazards. Control measures include engineering controls, administrative controls, and/or PPE, in this order of preference. Examples of control measures are available in Appendix C of this chapter and in OSHA Publication 3071, "Job Hazard Analysis."

6.1.7 Review and Submit JHA

The supervisor or employee may choose to submit the JHA to the SHeD for additional review and comment, if deemed appropriate. Once all issues are resolved, the supervisor shall review the final JHA with the affected employees in the organization.

6.2 JHA Format and Content

There is no specified format for a JHA; however, it shall contain the following information as a minimum.

- Job/ Task description
- Job location (building, room, and/or area)
- Who filled out or populated the JHA (Analyst(s))
- Other employees involved with the Job/ Task
    - Approver's/ Reviewer's Signature and Date Describe the following for each step listed: Description of each step
    - Description of the hazards present in each step
    - Hazard controls and PPE for each step

A blank JHA template (**C–82**) is provided in the GRC electronic forms management website (within the Logistics and Technical Information Division, LTID) and is the preferred format here at GRC. A blank JHA Template (**C-239**), also provided at the same site is the preferred format to be used for work orders that are generated in the Maximo Work Order System.

6.3 Change Control

Should any changes occur that involve the basic steps in JHA, the employee and supervisor shall update that JHA in accordance with Section **6.1** of this chapter.

In addition, the responsible supervisor shall conduct an annual review of work tasks and existing JHAs to determine if a new JHA is needed or if an existing JHA needs to be revised.

The supervisor shall review a JHA if a task-related close call, accident, injury, or illness occurs. The JHA shall be revised appropriately based on the results of the review.

6.4 Training

6.4 - The SHeD verification procedure to ensure compliance with the requirements listed in this section shall be accomplished by reviewing SATERN records or other personnel training records as required. It is also possible that training efficacy could be verified during periodic audits or spot checks.

There are two types of training associated with the JHA process: general and task-specific. While general JHA training provided by SHeD will be documented in the System for Administration, Training, and Educational Resources for NASA (SATERN) by Human Capital Development Division (HCDD), each organization shall maintain its own training records for task-specific JHA training.

6.4.1 General JHA Training

Anyone who participates in JHA development, review, approval, or maintenance should complete general JHA training prior to participation. General JHA training will cover the contents of this chapter and how to develop a JHA.

6.4.2 Task-Specific JHA Training

The supervisor shall provide task-specific JHA training to each employee before employees perform that task. Task-specific JHA training will cover the contents of the task-specific JHA. Refresher training shall be provided when the JHA is revised or after an incident.

7.0 RECORDS

- Job Hazard Analysis Form, NASA **C–82**.—Maintained by the organization that populated the JHA
- Job Hazard Analysis Form, NASA **C-239**.—Maintained by Code FT
- Job Hazard Analysis training records (Task Specific).—Maintained by supervisors.
- Job Hazard Analysis training records (General).—Maintained by HCDD

8.0 REFERENCES

Document Number	Document Name
OSHA Publication 3071	Job Hazard Analysis
GLM–QS–1700.1	Glenn Safety Manual, Chapter **1**, Safety Management
Occupational Safety and Health Act of 1970	OSHA General Duty Clause

APPENDIX A.—DEFINITIONS AND ACRONYMS

Corrective and preventive action reporting (CPAR)

Glenn Research Center (GRC)

Glenn Safety Manual (GSM)

Job Hazard Analysis (JHA)

Occupational Safety and Health Administration (OSHA)

Organization Development and Training (OD&T)

Personal protective equipment (PPE)

Plum Brook Station (PBS)

Safety and Health Division (SHeD)

Shall.—Indicates a requirement that is necessary to meet the standards of protection currently in effect

Should.—Indicates a recommendation that can be applicable

System for Administration, Training, and Educational Resources for NASA (SATERN)

APPENDIX B.—COMMON HAZARDS

Below is a list of common workplace hazards.

Note: This is not an all inclusive list.

Caught in, on, or between

Chemical.—toxic, flammable, combustible, corrosive, reactive

Collision.—struck by or against

Contact with

Electrical.—Shock, short circuit, fire, static, electrostatic discharge, loss of power

Ergonomics.—Strain, human error, repetitive motion, perception

Excavation.—Collapse, contact with underground structures and/or utilities

Explosion.—Overpressurization

Falls.—To same level, to different level, slips and/or trips

Fire.—Fuel, oxidizer, ignition source

Kinetic energy.—Linear, rotary

Mechanical.—Vibration, failure, stored potential energy

Noise.—Continuous, impact

Pathological.—Disease, bacteria, microorganisms

Radiation.—Ionizing, non-ionizing, electromagnetic, ultraviolet, infrared, visible

Temperature extreme.—Heat, heat stress, hypothermia, cold, cryogenics

Weather.—Snow, rain, wind, ice, lightning, tornado, flood

APPENDIX C.—HAZARDS CONTROL MEASURES

The following are general hazard control measures. They are listed from most to least preferred.

Note: This is not an inclusive list.

Engineering controls
Eliminate or minimize the hazard through design
Enclose the hazard or the personnel
Isolate the hazard with guards, interlocks, and barriers

Administrative controls
Written operating procedures, work permits, and safe work practices
Exposure time limitations
Alarms, signs, and warnings
Buddy system
Training

Personal protective equipment
Respirators
Hearing protection
Gloves
Protective clothing/aprons/sleeves
Safety glasses
Faceshields
Hardhats
Safety shoes/boots

Contents

1.0 PURPOSE 3
2.0 APPLICABILITY 3
3.0 BACKGROUND 3
4.0 POLICY 3
5.0 RESPONSIBILITIES 4
5.1 Center Director 4
5.2 Center Fall Protection Program Administrator 4
5.3 Fall Protection Program Lead 5
5.4 Fall Protection Committee 5
5.5 Supervisors 5
5.6 Procurement Personnel 6
5.7 Civil Servant Employees 6
5.8 Support Service Contractor Employees 6
5.9 Construction Contractor Employees 6
5.10 Competent Person 6
5.11 Employer 7
6.0 REQUIREMENTS 7
6.1 General Fall Protection Requirements 7
6.1.1 Rule Where Fall Protection Is Required 7
6.1.2 Exception to the Rule 7
6.1.3 The Fall Prevention Plan shall be reviewed by SHeD. Where Protection Is Needed (*29 CFR 1926*) 8
6.2 Fall Protection Systems Criteria and Practices 9
6.3 Safety nets are allowed at GRC only as a last resort. They must be an engineered system and a Fall Prevention Plan must be submitted and reviewed by SHeD. Guardrail Systems 9
6.3.1 Specifications for Guards and Guardrails 9
6.3.2 Temporary Removal of Guardrails 10
6.4 Personal Fall Arrest Systems 10
6.5 Positioning Devices 11
6.6 Warning Line Systems 11
6.7 Controlled Access Zones 12
6.8 Safety Monitoring Systems 12
6.9 Protective Covers 12
6.10 Fall Prevention Plan (C-979) 12
6.11 Organizational Work Instructions 13
6.12 Organizational Fall Protection Binders 13
6.13 Protection from Falling Objects 14
6.14 Training Requirements (*NPR 8715.3*) 14
6.14.1 Retraining 15
6.15 Guidelines for Scaffolding 15
6.15.1 Scaffold Training Requirements 15
6.15.2 Erection of Scaffolding—Prior to Erection—All Scaffold Assemblies 15
6.15.3 Erection of Fixed Scaffolds 15
6.15.4 Erection of Rolling Scaffold—Compliance 17
6.15.5 Use of Scaffolds—Compliance 17
6.15.6 Rolling Towers—Precautions and Compliance 17
6.16 Guidelines for Aerial Lifting Equipment 18
6.16.1 Types of Aerial Lifting Equipment—Scissor and Boom Lifts 18
6.16.2 All Aerial Lifting Equipment 18
6.17 Scissor Lifts 18
6.17.1 Characteristics of a Scissor Lift 18
6.17.2 Recommended Scissor Lift Safety Checklist 19
6.18 Boom Lifts 19

6.18.1 Characteristics of a Boom Lift 19
6.18.2 Recommended Boom Lift Safety Checklist 19
7.0 RECORDS 20
APPENDIX A .—DEFINITIONS AND ACRONYMS 21

Chapter 34—Fall Protection

NOTE: *The current version of this chapter is maintained and approved by the Safety and Health Division (SHeD). The last revision date of this chapter was December 2012. The current version is located on the Glenn Research Center (GRC) intranet at http://smad-ext.grc.nasa.gov/shed/pub/gsm/gsm-manual.pdf. Approved by Chief of Safety and Health Division.*

1.0 PURPOSE

This chapter describes policies and the minimal safe practices relating to all activities where fall protection is required at the NASA Glenn Research Center at Lewis Field and Plum Brook Station (GRC). All personnel performing activities where fall protection is required shall do so in a safe manner. All personnel utilizing fall protection systems shall meet or exceed the minimum safety requirements defined herein, and shall comply with all other Federal, State, and local requirements and standards. Exception: The provisions of this chapter do not apply when employees are making an inspection, investigation, or assessment of workplace conditions prior to the actual start of the work or after all the work has been completed.

2.0 APPLICABILITY

The provisions, responsibilities, and requirements as set forth in this chapter apply to

- All NASA GRC employees
- All GRC contractors, other NASA contractors, and non-NASA and non-contractor individuals present at GRC in accordance with the terms of their contracts or agreements with NASA
- Other Government organizational elements that are tenants at GRC or any other locations under GRC jurisdiction

3.0 BACKGROUND

Each year, falls consistently account for the greatest number of fatalities in the construction industry. A number of factors are often involved in falls, including unstable working surfaces, misuse or failure to use fall protection equipment, and human error. Studies have shown that using guardrails, fall arrest systems, safety nets, covers, and restraint systems can prevent many deaths and injuries from falls.

4.0 POLICY

NASA GRC endeavors to protect all government employees, contractors, subcontractors, and persons who are exposed to falls through the course of their work. Fall hazards shall be eliminated, mitigated, and/or controlled before an employee is exposed to the hazard. This policy is meant to strengthen existing fall protection programs, policies, and regulations. It does not replace Occupational Safety and Health Administration (OSHA) regulations, NASA, GRC, or contractor safety programs except where this policy is more stringent.

The GRC fall protection program states that persons involved in OSHA 1910 general industry activities on any walking/ working surface where a person is exposed to a fall to a lower level of 4 ft or greater shall be provided with fall protection. Fall hazards lower than 4 ft require protection if the work is over an uncommon hazard (moving machinery, chemicals, electrical, impalement hazards, etc.). For activities defined as construction under the OSHA 1926 regulation where a person is exposed to a fall to a lower level of 6 ft or greater shall be provided with fall protection. Fall hazards lower than 6 ft require protection if the work is over an uncommon hazard (moving machinery, chemicals, electrical, impalement hazards, etc.).

Construction contractors working at GRC shall submit a site-specific Fall Prevention Plan that will address project-specific fall hazards that will be encountered while working at heights. This site-specific Fall Prevention Plan shall become a part of the contractors Health and Safety Plan (HASP).

5.0 RESPONSIBILITIES

The GRC Center Director and designated Fall Protection Program Administrator, as well as the appropriate procurement entity and all personnel at NASA GRC who meet the requirements for fall protection, are responsible for understanding this chapter and conforming to its practices and provisions.

Safety and Health Division (SHeD)shall perform all HASP reviews.

5.1 Center Director

The Center Director shall

- Implement a Center fall protection program to protect all Government employees, contractors, subcontractors, international partners, and persons who are exposed to falls at onsite facilities through the course of their work (Requirement)
- Ensure that the Center's fall protection program complies with the requirements of 29 CFR 1910, General Industry, and 29 CFR 1926, Construction Industry; utilizes as guidelines (these versions), American National Standards Institute (ANSI)/American Society of Safety Engineers (ASSE) Z359, Fall Protection Code series (Z359.0–2007, Z359.1–2007, Z359.2–2007, Z359.3–2007, and Z359.4–2007); and complies with any more stringent requirements necessary for the Center's specific fall hazards (Requirement)
- Designate, in writing, a Center Fall Protection Program Administrator who is responsible for the development, implementation, and management of the Center's fall protection program (Requirement)
- Ensure that the designated Center Fall Protection Program Administrator and/or team has a working knowledge of current fall protection regulations, standards, and fall protection equipment and systems and the skills, experience, and abilities to effectively manage the Center's fall protection program (Requirement)

5.2 Center Fall Protection Program Administrator

- The Center Fall Protection Program Administrator shall implement and coordinate the Center's fall protection program (Requirement)
- Appoint a Fall Protection Program Lead. Provide guidance and oversight to ensure that NASA fall protection requirements are included in contracts where contractor employees of the acquisition will be working in situations that require fall protection
- Provide oversight to ensure that NASA fall protection requirements are included in work instructions where individuals will be working in situations that require fall protection
- Provide oversight to ensure that anyone who is identified as a qualified person (per ANSI/ASSE Z359.0–2007, paragraph 2.109) to serve as a subject matter expert in support of the Center's fall protection program has an engineering degree or access to a person with an engineering degree to identify and to evaluate unique situations and nonstandard equipment and has been trained by an industry-recognized trainer, NASA-recognized trainer/training center, or NASA-developed training program equivalent to ANSI- and OSHA-compliant training
- Provide oversight to ensure that for each situation that requires fall protection at the Center (NASA or contractor led) there is a competent person (per ANSI/ASSE Z359.0–2007, paragraph 2.27) assigned responsibility for the immediate application of fall protection work where fall protection is required, whose education and training has been administered by an industry-recognized trainer, NASA-recognized trainer/training center, or NASA-developed training program equivalent to ANSI- and OSHA-compliant training (Requirement)
- Remain current with changing OSHA and ANSI fall protection requirements, NPR **8715.3**, local laws, and new fall protection systems (Requirement)
- Conduct an annual review and audit of the Center's fall protection program to ensure compliance. Use of new technology, regulations, and industry practices should be considered during the annual review.

5.3 Fall Protection Program Lead

Fall Protection Program Lead shall

- Evaluate the Center wide hazards, determine where protection from falls from elevation is required, and establish any additional, more-stringent requirements necessary to protect against Center-specific fall hazards (delegated from the Fall Protection Administrator)
- Coordinate with the Fall Protection Administrator regarding fall protection program development.
- Maintain certification to fulfill role of Qualified Person as defined by NPR 8715.3
- Perform Qualified Person duties
- Chair the Fall Protection Committee
- Coordinate meetings with the organizations competent persons
- Develop and maintain the Fall Prevention Plan (C-979)
- Conduct annual binder reviews
- Provide consultation on appropriate equipment selection
- Conduct fall hazard site validation survey
- Remain current with changing OSHA and ANSI fall protection requirements, NPR **8715.3**, local laws, and new fall protection systems

5.4 Fall Protection Committee

- A committee consisting of Competent Persons, appointed by their organizations, and chaired by the Fall Protection Program Lead. The purpose is to meet periodically to discuss recent updates in standards, equipment and protocol. The information shared at the meeting is communicated to their organization by the Competent Person. General discussions regarding activities at GRC and any questions or comments that members might have are addressed. Also, any information on recalled fall equipment is communicated.

5.5 Supervisors

Supervisors shall

- Ensure that NASA fall protection requirements are included in work instructions where NASA employees and/or contractors will be working in situations that require fall protection
- Ensure that anyone who is identified as a qualified person (per ANSI/ASSE Z359.0–2007, paragraph 2.109) to serve as a subject matter expert in support of the Center's fall protection program has been trained by an industry-recognized trainer, NASA-recognized trainer/training center, or NASA-developed training program equivalent to ANSI- and OSHA-compliant training (ANSI/ASSE Z359.2–2007, Section C.5)
- For each situation that requires fall protection at the Center (NASA or contractor led), ensure that there is a competent person (per ANSI/ASSE Z359.0–2007, paragraph 2.27) assigned responsibility for the immediate application of fall protection work where fall protection is required whose education and training has been administered by an industry-recognized trainer, NASA-recognized trainer/training center, or NASA-developed training program equivalent to ANSI- and OSHA-compliant training
- Remain current with changing OSHA and ANSI fall protection requirements, NPR **8715.3**, state and local laws, and new fall protection systems
- Ensure that employees under their supervision who are required to use a fall protection system are trained to recognize the hazards associated with falls from elevated heights and shall ensure that employees under their supervision comply with the requirements of this chapter and with the applicable fall protection procedures

- Ensure that employees requiring fall protection utilize the necessary fall protection systems in a safe manner and in accordance with the manufacturer's recommendations for use of the specific fall protection systems
- Ensure that employees have a complete understanding of the rescue plan (C-979) procedures in case of an emergency

5.6 Procurement Personnel

Procurement personnel shall

- In coordination with the Center Office of Safety and Mission Assurance, ensure that NASA fall protection requirements within NPR 8715.3 are included in contracts where contractor employees will be working on NASA property in situations that require fall protection

5.7 Civil Servant Employees

All employees at NASA GRC shall understand and conform to the policies, safe practices, and provisions of this chapter. All civil servants shall understand and conform to the policies, safe practices, and provisions of this chapter.

All civil servant employees utilizing fall protection at GRC shall have an organizational competent person designated with training as defined in NPR 8715.3. The competent person shall develop a C-979 Fall Prevention Plan, for each task requiring the use of fall protection equipment. The competent person shall review the C-979 Fall Prevention Plan with the fall protection users prior to the start of work.

5.8 Support Service Contractor Employees

All Support Service contractor employees shall comply with this chapter. All contractors shall understand and conform to the policies, safe practices, and provisions of this chapter.

All support service contractor employees utilizing fall protection at GRC shall have a competent person designated with training as defined in NPR 8715.3. The competent person shall develop a C-979 Fall Prevention Plan, for each task requiring the use of fall protection equipment. The competent person shall review the C-979 Fall Prevention Plan with the fall protection users prior to the start of work.

5.9 Construction Contractor Employees

All construction contractor employees shall comply with this chapter. All contractors shall understand and conform to the policies, safe practices, and provisions of this chapter.

All construction contractor employees utilizing fall protection at GRC shall submit in writing a site-specific HASP that include a C-979 Fall Prevention Plan, which identifies

- Hazardous conditions requiring fall protection
- Methods of fall protection that will be used to ensure a safe and healthful working environment
- How the contractor plans to protect both the health and safety of NASA and contractor employees and government property and equipment
- A written rescue plan to retrieve a fallen or suspended worker from the area
- Contractors are required to have a competent person that has received industry recognized fall protection competent person training and have documentation of this training available upon request.

5.10 Competent Person

For the purposes of this chapter, the competent person shall be qualified in the following areas of fall protection:

- Nature of fall hazards
- Erecting, maintaining, disassembling, and inspection of the fall protection systems
- Use and operations of fall protection systems
- Handling and storage of equipment and materials and erection of overhead protection

- Role of employees in fall protection plans
- All standards contained in 29 CFR Part 1926, Subpart M
- All standards contained in ANSI Z359

After successful completion of an industry-recognized competent person training program, the competent person, as defined by NPR **8715.3**, is an individual who, by way of said training and experience, is knowledgeable of applicable standards, is capable of identifying workplace hazards relating to the specific operation, is designated by the contracting manager, and has authority to take appropriate actions. For construction contractors the competent person shall be listed on the applicable site-specific HASP.

The competent person is responsible for the following

- Completion of the C-979 Fall Prevention Plans for tasks
- Educating fall protection users on the requirements designated within the C-979 Plan
- Maintaining a list of authorized users for their assigned organization
- Maintain an inventory of fall protection equipment
- Performing and documenting the annual inspection of fall protection equipment
- Establishing and maintaining the organizational fall protection implementation work instruction.

5.11 Employer

It is the responsibility of the employer to determine if the walking/working surfaces on which employees are to work have the strength and structural integrity to support employees safely. Employees are permitted to work on those surfaces only when the surfaces have the necessary strength and structural integrity. The employer shall select fall protection measures compatible with the type of work being performed and specific to the site of the work. The employer shall assign a competent person that meets the requirements in Section **5.8** and Section 5.9 of this chapter.

6.0 REQUIREMENTS

6.1 General Fall Protection Requirements

The SHeD verification procedure to ensure compliance with the requirements listed in this section, shall be accomplished by reviewing Design Reviews, HASP's (Health and Safety Plans), C-979's and conducting on site safety inspections

6.1.1 Rule Where Fall Protection Is Required

6.1.1.1 General Industry Worker (*29 CFR 1910*)

When a worker is on a walking/working surface an unprotected side or edge which is 4 ft or more above a lower level, or when workers could fall into or onto dangerous equipment from 4 ft or less, the worker shall be protected from falling by using guardrail systems, safety net systems, or personal fall arrest systems.

6.1.1.2 Construction Worker (*29 CFR 1926*)

Anytime a worker is on a walking/working surface or constructing a leading edge with an unprotected side or edge, which is 6 ft (1.8 m) or more above a lower level, or when workers could fall into or onto dangerous equipment from 6 ft (1.8 m) or less, the worker must be protected from falling by using guardrail systems, safety net systems, or personal fall arrest systems.

6.1.2 Exception to the Rule

If the employer can demonstrate that it is not feasible or creates a greater hazard to use these systems, the competent person shall develop and implement a written Fall Prevention Plan. The Fall Prevention Plan shall be prepared by a competent person, shall be specific to the site, and shall be maintained up to date. See Section 6.10 of this chapter.

6.1.3 The Fall Prevention Plan shall be reviewed by SHeD. Where Protection Is Needed (*29 CFR 1926*)

Below is a list of possible exposures that shall require a fall protection system(s). It is the responsibility of the employer to determine the fall protection required as it pertains to the work to be accomplished and the specific worksite. (List may not be all inclusive.).

- Unprotected sides and edges—Each employee on a walking/working surface (horizontal and vertical surface) with an unprotected side or edge, which is 6 ft (1.8 m) or more above a lower level shall be protected from falling by the use of guardrail systems, safety net systems, or personal fall restraint/fall arrest systems.
- Leading edges—Each employee who is constructing a leading edge 6 ft (1.8 m) or more above lower levels shall be protected from falling by guardrail systems, safety net systems, or personal fall restraint/fall arrest systems. Exception: When the employer can demonstrate that it is infeasible or creates a greater hazard to use these systems, the employer shall develop and implement a Fall Prevention Plan (see Section6.10). The Fall Prevention Plan shall be reviewed by SHeD.
- Hoist areas—Each employee in a hoist area shall be protected from falling 6 ft (1.8 m) or more to lower levels by guardrail systems or personal fall restraint/fall arrest systems. If guardrail systems (or chain, gate, or guardrail) or portions thereof, are removed to facilitate the hoisting operation (e.g., during landing of materials), and an employee must lean through the access opening or out over the edge of the access opening, that employee shall be protected from fall hazards by a personal fall restraint/fall arrest system.
- Holes—Each employee on walking/working surfaces shall be protected from falling through holes (including skylights) more than 6 ft (1.8 m) above lower levels, by personal fall restraint/fall arrest systems, covers, or guardrail systems erected around such holes.
- Formwork and reinforcing steel—Each employee on the face of formwork or reinforcing steel shall be protected from falling 6 ft (1.8 m) or more to lower levels by personal fall restraint/fall arrest systems, safety net systems, or positioning device systems.
- Ramps, runways, and other walkways—Each employee on ramps, runways, and other walkways shall be protected from falling 6 ft (1.8 m) or more to lower levels by guardrail systems.
- Excavations—Each employee at the edge of an excavation 6 ft (1.8 m) or more in depth shall be protected from falling by guardrail systems, fences, barricades, or covers. Where walkways are provided to permit employees to cross over excavations, guardrails are required on the walkway if the fall would be 6 ft (1.8 3m) or more to the lower level.
- Pit, well, or shaft—Each employee at the edge of a well, pit, shaft, and similar excavation 6 ft (1.8 m) or more in depth shall be protected from falling by guardrail systems, fences, barricades, or covers.
- Dangerous equipment less than 6 ft—Each employee less than 6 ft (1.8 m) above dangerous equipment shall be protected from falling into or onto the dangerous equipment by guardrail systems or by equipment guards.
- Dangerous equipment more than 6 ft.—Each employee 6 ft (1.8 m) or more above dangerous equipment shall be protected from fall hazards by guardrail systems, personal fall restraint/fall arrest systems, or safety net systems.
- Overhand bricklaying and related work—Each employee performing overhand bricklaying and related work 6 ft (1.8 m) or more above lower levels shall be protected from falling by guardrail systems, safety net systems, or personal fall arrest systems or shall work in a controlled access zone. Each employee reaching more than 10 in. (25 cm) below the level of the walking/working surface on which they are working shall be protected from falling by a guardrail system, safety net system, or personal fall restraint/fall arrest system. Note that bricklaying operations performed on scaffolds are regulated by Subpart L of 29 CFR 1926.
- Roofing work on low-slope roofs—Each employee engaged in roofing activities on low-slope roofs with unprotected sides and edges 6 ft (1.8 m) or more above lower levels, shall be protected from falling by guardrail systems, safety net systems, personal fall restraint/fall arrest systems, or a combination of warning

line system and guardrail system, warning line system and safety net system, warning line system and personal fall restraint/fall arrest system. The use of a warning line and safety monitoring system is not permitted unless it can be demonstrated that it is the only viable option and concurred by SHeD.

- Precast concrete erection—Each employee engaged in the erection of precast concrete members (including, but not limited to the erection of wall panels, columns, beams, and floor and roof "tees") and related operations such as grouting of precast concrete members, who is 6 ft (1.8 m) or more above lower levels, shall be protected from falling by guardrail systems, safety net systems, or personal fall restraint/fall arrest systems. Exception: When the employer can demonstrate that it is infeasible or creates a greater hazard to use these systems, the employer shall develop and implement a Fall Prevention Plan (see Section 6.10). The Fall Prevention Plan shall be reviewed by SHeD.
- Wall openings—Each employee working on, at, above, or near wall openings (including those with chutes attached) where the outside bottom edge of the wall opening is 6 ft (1.8 m) or more above lower levels and the inside bottom edge of the wall opening is less than 39 in. (1.0 m) above the walking/working surface, shall be protected from falling by the use of a guardrail system, a safety net system, or a personal fall restraint/fall arrest system.
- Walking/working surfaces not otherwise addressed—Each employee on a walking/working surface 6 ft (1.8 m) or more above lower levels shall be protected from falling by a guardrail system, safety net system, or personal fall restraint/fall arrest system.

6.2 Fall Protection Systems Criteria and Practices

The SHeD verification procedure to ensure compliance with the requirements listed in this section, shall be accomplished by reviewing HASP's (Health and Safety Plans), design reviews, C-979's and on site safety inspections.

- The fall protection system, selected by the competent person, is to be one which the competent person deems is most appropriate for protecting the worker.
- Employers shall provide and install all fall protection systems before an employee begins the work that necessitates the fall protection.
- Components and systems that are commercial off the shelf shall be supplied with complete installation and operation instructions, and those instructions shall be followed. Only a qualified person may change the instructions, and those changes are documented prior to use.

6.3 Safety nets are allowed at GRC only as a last resort. They must be an engineered system and a Fall Prevention Plan must be submitted and reviewed by SHeD. Guardrail Systems

The SHeD verification procedure to ensure compliance with the requirements listed in this section, shall be accomplished by reviewing HASP's (Health and Safety Plans), design reviews and on site safety inspections.

Guardrail systems means a barrier erected to prevent employees from falling to lower levels. Guardrail system components shall be selected and constructed in accordance with Appendix B to Subpart M of 29 CFR 1926. Guardrails constructed in accordance with Subpart M, 29 CFR 1926.502(b) will meet the requirement.

6.3.1 Specifications for Guards and Guardrails

- Top edge height of top rails, or equivalent guardrail system members, shall be 42 in. (1.1 m) plus or minus 3 in. (8 cm) above the walking/working level. When conditions warrant, the height of the top edge may exceed the 45-in. height, provided the guardrail system meets all other criteria of this paragraph.
- Midrails, screens, mesh, intermediate vertical members, or equivalent intermediate structural members shall be installed between the top edge of the guardrail system and the walking/working surface when there is no wall or parapet wall at least 21 in. (53 cm) high.
- Guardrail systems shall be capable of withstanding, without failure, a force of at least 200 lb (890 N) applied within 2 in. (5.1 cm) of the top edge, in any outward or downward direction, at any point along the top edge.

- Guardrail systems shall prevent punctures, lacerations, or snagged clothing.
- Steel and plastic banding shall not be used as top rails or midrails.
- When guardrail systems are used at holes, they shall be erected on all unprotected sides or edges of the hole.
- Guardrail systems used on ramps and runways shall be erected along each unprotected side or edge.

6.3.2 Temporary Removal of Guardrails

- If a guardrail must be removed to accommodate work
  - only that portion of the guardrail necessary to allow the work to be done may be removed
  - workers exposed to a fall hazard must be protected by another fall protection system when the guardrail is absent
- The guardrail must be replaced
  - when the unguarded area is left unattended
  - after the work is completed if the circumstances still require guardrails
- Safety nets are allowed at GRC only as a last resort. They must be an engineered system and a Fall Prevention Plan must be submitted and reviewed by SHeD.
- Safety nets must meet the requirements of 29 CFR 1926.502(c), Safety and Health regulations fo Construction, Subpart M, or other standard, appropriate to the type of net involved, which is acceptable to SHeD.
- Safety nets and their installation shall be capable of absorbing an impact force equal to that produced by the drop test specified in the requirements of 29 CFR 1926.502©.

6.4 Personal Fall Arrest Systems

The SHeD verification procedure to ensure compliance with the requirements listed in this section, shall be accomplished by reviewing HASP's (Health and Safety Plans), design reviews, C-979's and on site safety inspections.

- Personal fall arrest systems shall meet the requirements of 29 CFR 1926.502(d) and ANSI/ASSE Z359, Fall Protection Code Series, (Z359.0-2007, Z359.1-2007, Z359.2-2007, Z359.3-2007, and Z359.4-2007)
- All employees who use fall protection equipment shall be able to calculate the fall arrest distance for each individual task.
- Connectors and devices used to couple parts of the personal fall-arrest system and positioning device system together shall be drop-forged, pressed or formed steel, corrosion-resistant, and smooth-surfaced to prevent damage to interfacing parts.
- Dee-rings and snaphooks shall have a minimum tensile strength of 5000 lb and shall be proof-tested to a minimum tensile load of 3600 lb without cracking, breaking, or taking permanent deformation.
- Connecting non-locking snaphooks to an incompatibly shaped object, where rollout or unintentional disengagement could occur, or to horizontal lifelines is prohibited.
- Design, install, and use horizontal lifelines shall be under the supervision of a qualified person, as part of a complete personal fall-arrest system that maintains a safety factor of two.
- Employees shall have their own vertical lifeline with a breaking strength of at least 5000 lb.
- Two employees may be attached to the same lifeline during elevator construction if they meet the requirements of 29 CFR 1926.502(d)(10)(ii).

- Lifeline shall be protected from being cut or abraded.
- Self-retracting lifelines that do not limit the free-fall distance to 2 ft, and rip stitch, tearing, and deforming lanyards, shall have a minimum tensile load of 5000 lb when the device is fully extended.
- Self-retracting lifelines and lanyards that automatically limit the free-fall distance to 2 ft or less shall have a minimum tensile load of 3000 lb.
- Anchorage of personal fall-arrest equipment shall support 5000 lb per employee attached.
- Do not anchor personal fall-arrest equipment to anything used to support or suspend platforms.
- Personal fall-arrest systems shall not be attached to guardrail systems.
- When possible, anchor locations should be located at or above the employees head. If work is done above an achorage point, which would allow for a free fall greater than 6ft, the organizations competent or qualified person should be consulted.
- Anchorages used for attachment of personal fall-arrest system shall be designed, installed, and used under the supervision of a qualified person.
- The employer shall provide for prompt rescue of employees in the event of a fall or shall assure that employees are able to rescue themselves.

6.5 Positioning Devices

The SHeD verification procedure to ensure compliance with the requirements listed in this section, shall be accomplished by reviewing HASP's (Health and Safety Plans), design reviews, C-979's and on site safety inspections.

- Positioning-device systems means a body harness rigged to allow an employee to be supported on an elevated vertical surface, such as a wall, and work with both hands free while leaning.
- Rig positioning devices so employees cannot free fall more than 2 ft.
- The anchorage shall be capable of supporting twice the potential impact load, or 3000 lb, whichever is greater.
- Connectors shall follow the same criteria as outlined in Section **6.4**`, Personal Fall Arrest Systems.

6.6 Warning Line Systems

The SHeD verification procedure to ensure compliance with the requirements listed in this section, shall be accomplished by reviewing HASP's (Health and Safety Plans), C-979's and on site safety inspections.

- Warning line systems shall meet the requirements of 29 CFR 1926.502(f).
- Place the warning line on all sides of the roof work area, and erect it not less than 6 ft from the edge.
- Warning line shall consist of ropes, wires, or chains with supporting stanchions.
- Flag the rope, wire, or chain at 6-ft intervals with high-visibility materials.
- Stanchions shall be capable of resisting, without tipping over, a force of at least 16 lb applied horizontally against the stanchion.
- Stanchions shall be 30 in. above the walking/working surface.
- Stanchions shall be perpendicular to the warning line and in the direction of the edge.
- Rope, wire, or chain shall have a minimum of tensile strength of 500 lb, and be capable of supporting the loads applied to the stanchions.
- Employees are prohibited from the area between the warning line and the roof edge unless they are performing roof work in that area and a safety monitor is present..

- Equipment on roofs shall be used or stored only in areas where employees are protected by a warning line system, guardrail systems, or personal fall restraint/fall arrest systems.

6.7 Controlled Access Zones

The SHeD verification procedure to ensure compliance with the requirements listed in this section, shall be accomplished by reviewing HASP's (Health and Safety Plans), C-979's and on site safety inspections.

- Controlled access zones (CAZ) shall meet the requirements of CFR 1926.502(g), Safety and Health Regulations for Construction, Subpart M
- Controlled access zones must incorporate a C-979 Fall Prevention Plan.
- A CAZ may be used in overhead bricklaying, leading edge, and precast concrete erection operations.

6.8 Safety Monitoring Systems

The SHeD verification procedure to ensure compliance with the requirements listed in this section, shall be accomplished by reviewing HASP's (Health and Safety Plans), C-979's and on site safety inspections.

- Safety monitoring systems shall meet the requirements of 29 CFR 1926.502(h).
- Safety monitors shall not have responsibilities that take their attention from the monitoring function.
- Only employees performing low-slope roofing work shall be in areas guarded by a safety monitor system (see CFR 1926.501(b)(9) and 1926.502(k)).

6.9 Protective Covers

The SHeD verification procedure to ensure compliance with the requirements listed in this section, shall be accomplished by reviewing HASP's (Health and Safety Plans), C-979's and on site safety inspections.

- Covers shall meet the requirements of 29 CFR 1926.502(i), Safety and Health Regulations for Construction, Subpart M.
- Covers are a method of protection for holes.
- Covers in roadways shall support at least twice the maximum axle load of the largest vehicle crossing the hole.
- Covers shall carry at least twice the weight of employees, equipment, and materials that may be imposed on them.
- Secure the cover to prevent displacement by wind, equipment, or employees.
- All covers shall be color coded or they shall be marked with the words "HOLE" or "COVER" to provide warning of the hazard.

  NOTE: *This provision does not apply to cast-iron manhole covers or steel grates used on streets or roadways.*

6.10 Fall Prevention Plan (C-979)

The SHeD verification procedure to ensure compliance with the requirements listed in this section, shall be accomplished by reviewing HASP's (Health and Safety Plans), C-979's and on site safety inspections.

- The Fall Prevention Plan (C-979) shall be prepared by a Competent Person and developed for a specific job when the use of traditional fall protection is being used. The Fall Prevention Plan (C-979) shall include a written discussion of measures that will be taken to reduce or eliminate the fall hazard for workers. The plan details the task, fall protection equipment, fall hazards identified, the procedure and a rescue plan. The plan shall be reviewed by the Competent Person with the workers involved with the task. After reviewing

the plan, all individuals involved will sign off, showing that they understand the hazards involved, the equipment to be used and the rescue plan.

- The Fall Prevention Plan shall
  - Be prepared by a competent person
  - Be specific to the site/job.
  - Be maintained at the jobsite
  - Be implemented under the constant supervision of a competent person
- Document why the use of conventional fall protection systems (guardrail systems, personal fall arrest systems, or safety net systems) is infeasible or why their use would create a greater hazard.
- Provide a written discussion of measures to reduce or eliminate fall hazards.
- Identify each location where conventional fall protection methods cannot be used. These locations shall then be classified as controlled access zones and the employer must comply with the criteria in 29 CFR 1926.502(g), Safety and Health Regulations for Construction, Subpart M.
- Provide the name or other method of identification for each employee who is designated to work in controlled access zones. No other employees may enter controlled access zones.
- Where no other alternative measure has been implemented, the employer shall implement a safety monitoring system in conformance with 29 CFR 1926.502(h).
- In the event an employee falls, or any related mishap occurs, the employer shall provide a method to investigate the circumstances of the fall or mishap to determine if the fall protection plan needs to be changed (e.g., new practices, procedures, or training) and shall implement those changes to prevent similar types of falls or incidents.
- Be reviewed and concurred by SHeD for construction contractor activities, including any changes to the original C-979.

6.11 Organizational Work Instructions

The SHeD verification procedure to ensure compliance with the requirements listed in this section shall be accomplished by conducting an annual review and audit process.

The GRC fall prevention program states that persons involved in OSHA general industry activities on any walking/working surface where a person is exposed to a fall to a lower level of 4ft. or greater shall be provided with fall protection. This work instruction provides procedures to comply with the requirement of NPR 8715.3, section 3.18, supervisors ensure NASA fall protection requirements are included in work instructions where NASA employees and/or contractors will be working in situations that require fall protection.

Supervisors are to perform a hazard analysis when working on vertical heights 4 ft. above a lower level. This will result in generating a C-979 form (Fall Prevention Plan) by the organizational competent person. The C-979 Fall Prevention Plan will serve as a work instruction to the employees working at height.

6.12 Organizational Fall Protection Binders

The SHeD verification procedure to ensure compliance with the requirements listed in this section shall be accomplished by conducting an annual review and audit process.

The Organizational Fall Protection Binder will be reviewed annually and will contain:

- Chapter 34, Fall Protection
- Organizational Work Instructions
- C-979 – Fall Prevention Plan

- List of Authorized users
- Equipment list / Inspection records
- Fall protection training records

6.13 Protection from Falling Objects

The SHeD verification procedure to ensure compliance with the requirements listed in this section shall be accomplished by on site safety inspections.

When employees are working in areas where there is a possible danger of injury from impact, or from falling or flying objects, the employer shall provide protective helmets to the employees and shall implement one of the following measures:

- Erect toeboards—Toeboards shall be erected along the edge of the overhead walking/working surface for a distance sufficient to protect workers below, capable of withstanding, without failure, a force of at least 50 lb applied at any point along the toeboard, a minimum of 3.5 in. (9 cm) in vertical height from their top edge to the level of the walking/working surface and not more than 0.25 in. (0.6 cm) clearance above the walking/working surface and shall be solid or have openings not over 1 in. (2.5 cm) in greatest dimension. Where tools, equipment, or materials are piled higher than the top edge of a toeboard, paneling or screening shall be erected from the walking/working surface or toeboard to the top of a guardrail system's top rail or midrail, for a distance sufficient to protect employees below.
- Canopy structure—Canopies, when used as falling object protection, shall be strong enough to prevent collapse and to prevent penetration by any objects which may fall onto the canopy.
- Guardrail systems—Guardrail systems, when used as falling object protection, shall have all openings small enough to prevent passage of potential falling objects.
- Roof work—Materials and equipment shall not be stored within 6 ft (1.8 m) of a roof edge unless guardrails are erected at the edge. Materials that are piled, grouped, or stacked near a roof edge shall be stable and self supporting.
- Overhand bricklaying and related work—No materials or equipment except masonry and mortar shall be stored within 4 ft (1.2 m) of the working edge. Excess mortar, broken or scattered masonry units, and all other materials and debris shall be kept clear from the work area by removal at regular intervals.

6.14 Training Requirements (*NPR 8715.3*)

The SHeD verification procedure to ensure compliance with the requirements listed in this section, shall be accomplished by reviewing HASP's (Health and Safety Plans), design reviews and on site audit of training records.

The following training provisions supplement and clarify the requirements of CFR 1926.21 regarding the hazards addressed in 29 CFR 1926, Subpart M.

Employers shall provide a training program for each employee who might be exposed to fall hazards. The program must enable each worker to recognize the hazards of falling, and be trained in the procedures to be followed to minimize these hazards. The employer must prepare and provide at the workplace a written certification record. The written certification record is to contain the name or other identity of the employee trained, the date(s) of the training, and the signature of the person who conducted the training or the signature of the employer. If the employer relies on training conducted by another employer, the certification record shall indicate date the employer determined the prior training was adequate rather than the date of actual training. The latest training certification shall be maintained and be made available to the SHeD upon request. All training records shall be up to date.

Each employee shall be trained, as necessary, by a competent person qualified in the following areas:

- Nature of the fall hazard
- Correct procedures for erecting, maintaining, disassembling, and inspecting the fall protection systems to be used

- Use and operation of guardrail systems, personal fall arrest systems, safety net systems, warning line systems, safety monitoring systems, controlled access zones, and other protection systems to be used
- Role of each employee in the safety monitoring system when this system is used
- Limitations on the use of mechanical equipment during the performance of roofing work on low-sloped roofs
- Correct procedures for handling and storage of equipment and materials and the erection of overhead protection
- Role of employees in fall protection plans
- Knowledge of applicable Federal, State, and local requirements and standards

6.14.1 Retraining

- Employees shall receive more training when it is believed that previously trained employees do not understand nor have the skills needed to recognize and minimize these hazards.
- Retraining shall be required when changes in the workplace or in the fall protection equipment render previous training obsolete.

6.15 Guidelines for Scaffolding

The SHeD verification procedure to ensure compliance with the requirements listed in this section, shall be accomplished by reviewing HASP's (Health and Safety Plans), and on site safety inspections.

NOTE: *The use of all scaffolding shall comply with OSHA CFR 1926, Subpart L, and CFR 1910.28. Erection and dismantling of scaffolding must be done under the direct supervision of a competent person.*

6.15.1 Scaffold Training Requirements

The employer shall have each employee who performs work while on a scaffold trained by a person qualified in the subject matter to recognize the hazards associated with the type of scaffold being used and to understand the procedures to control or minimize those hazards.

6.15.2 Erection of Scaffolding—Prior to Erection—All Scaffold Assemblies

- A jobsite shall be inspected to determine ground conditions, proximity of electric power lines, overhead obstructions, wind conditions, and the need for overhead protection or weather protection coverings. These conditions must be evaluated and adequately provided for.
- Frame spacing and mud sill size can only be determined after the total loads to be imposed on the scaffold and the strength of the supporting soil or structure is calculated and considered. This analysis shall be done by a qualified person.
- Stationary scaffolds over 125 ft in height and rolling scaffolds over 60 ft in height shall be designed by a professional engineer.
- All equipment shall be inspected to see that it is in good condition and is serviceable. Damaged or deteriorated equipment shall not be used.
- Wood planks shall be inspected to see that it is graded for scaffold use, is sound and in good condition, straight grained, and free from saw cuts, splits, and holes. (Not all species and grades of lumber can be used as scaffold plank. Wood planks used for scaffolding shall be specifically graded for scaffold use by an approved grading agency.)

6.15.3 Erection of Fixed Scaffolds

NOTE: *CFR 29 1926.451(g)(2) of CFR 29 1926.451 addresses fall protection for scaffold erectors and dismantlers.*

- Scaffolding shall be erected, moved, or disassembled only under the supervision of qualified persons. Hardhats must be worn by all persons erecting, moving, dismantling, or using scaffolding.

- Mud sills shall be adequate size to distribute the loads on the scaffolding to the soil or supporting structure. Sills should be level and in full contact with the supporting surface.
- Base plates or screwjacks with base plates shall be in firm contact with both the sills and the legs of the scaffolding. Compensate for uneven ground with screwjacks with base plates. Unstable objects such as blocks, loose bricks, etc., shall not be used.
- Plumb and level scaffolding until connections can be made with ease. Be sure scaffold stays level and plumb as erection progresses.
- The following general guides are minimum requirements when utilizing ties, guys, bracing, and/or outriggers for a safe stable scaffolding assembly:
    - Scaffolding shall always be secure when the height of the scaffold exceeds for four times the minimum base width.
    - The bottom tie shall be placed no higher than four times the minimum base width and every 26 ft vertically thereafter. Ties should be placed as close to the top of the scaffold as possible and, in no case, less than four times the minimum base width of the scaffold from the top.
    - Vertical ties shall be placed at the ends of scaffold runs and at no more than 30 ft horizontal intervals between.
    - Ties shall be installed as the erection progresses and not removed until the scaffold is dismantled to that height.
    - Side brackets, cantilevered platforms, pulleys or hoist arms, and wind conditions introduce overturning and uplift forces that must be considered and compensated for. These assemblies may require additional bracing, tying, or guying.
- Work platforms shall be fully planked either with scaffold-graded, solid-sawn, or laminated plank, in good sound condition, or with fabricated platforms in good condition.
- Each plank shall overlap the support by a minimum of 6 in. or be cleated, that is, 8-ft planks on 7-ft spans must be cleated.
- Plank shall not extend beyond the support by more than 18 in. Such overhangs should be separated from the work platform by guardrailing so that they cannot be walked on.
- Plank on continuous runs shall extend over the supports and overlap each other by at least 12 in.
- Spans of full thickness, 2- by 10-in. scaffold-grade planks, shall never exceed 10 ft. Loads on plank shall be evenly distributed and not exceed the allowable loads for the type of plank being used. No more than one person should stand on an individual plank at one time.
- Planks and/or platforms shall be secured to scaffolding when necessary to prevent uplift of displacement because of high winds or other job conditions. Guardrails shall be used on all open sides and ends of scaffold platforms. Both top and midrails shall be required.
- Toeboards shall be required whenever people are required to work or pass under or around the scaffold platform.
- Access shall be provided to all work platforms. If it is not available from the structure, access ladders and frames with built-in ladders or stairways must be provided. When frames with built-in ladders are used, cleated plank or fabricated plank must be used at platform levels to minimize or eliminate platform overhang. Access ladders must extend at least 3 ft above platforms.
- Side and end brackets are designed to support people only. Materials shall never be placed on cantilevered platforms unless the assembly has been designed to support material loads by a qualified person. (These types of platforms cause overturning and uplift forces, which must be compensated for. All frames shall be fastened together to prevent uplift an overturning moment compensated for with counterweights or adequate ties.)

- Putlogs shall never be used for the storage of materials. They are designed for personnel use only. Special care should be taken when putlogs are used.
- Scaffolds shall not be used as material hoist towers or for mounting derricks unless the assembly is designed by a qualified person.
- Check the erected assembly before use. A competent qualified person shall thoroughly inspect the completed assembly to see that is complies with all safety codes, that nuts and bolts are tightened, that it is level and plumb, that work platforms are fully planked, that guardrails are in place, and safe access is provided.

6.15.4 Erection of Rolling Scaffold—Compliance

- Height of the tower must not exceed four times the minimum base dimension. Outrigger frames or units on both sides of the tower may be used to increase base width dimension when necessary.
- All casters must be secured to frame legs or screwjacks with a nut and bolt or other secure means. Total weight of tower should not exceed the capacity of the casters.
- Screwjacks must not be extended more than 12 in. above the caster base. Tower must be kept level and plumb at all times.
- Horizontal/diagonal bracing must be used at the bottom and top of the tower and at intermediate levels of 20 ft. Fabricated planks with hooks may replace the top diagonal brace.
- All frames must be fully cross braced.
- Only prefabricated planks or cleated planks should be used.
- Casters must be locked at all times the scaffold is not being moved.

6.15.5 Use of Scaffolds—Compliance

NOTE: *Each employee on a scaffold more than 10 ft (3.1 m) above a lower level shall be protected from falling to that lower level. (CFR 29 1926.451, Paragraphs (g)(1)(i) through (vii) establish the types of fall protection to be provided to the employees on each type of scaffold.)*

- Inspect the scaffold assembly before each use to see that it is assembled correctly, that it is level and plumb, base plates are in firm contact with sills, bracing is in place and connected, platforms are fully planked, guardrails are in place, safe access is provided, that it is properly tied and/or guyed, and that there are no overhead obstructions or electric lines within 12 ft of the scaffold assembly.
- Use only the safe means of access that is provided. Do not climb bracing or frames not specifically designed for climbing. If such access is not provided, insist that it be provided.
- Climb safely, face the rungs as you climb up or down, use both hands, do not try to carry materials while you climb.
- Do not work on slippery rungs to avoid slipping.
- Do not overload platforms with materials.
- Working heights shall not be extended by planking guardrails or by use of boxes or ladders on scaffold platforms.
- Do not remove any component of a completed scaffold assembly except under the supervision of a qualified person. Any component that has been removed should be immediately replaced.

6.15.6 Rolling Towers—Precautions and Compliance

- Do not ride manually propelled rolling scaffold. No personnel should be on the tower while it is being moved.
- Lock all casters before getting on the tower.

- Work only within the platform area: do not try to extend overhead workarea by reaching out over guardrailing.
- Do not bridge between two rolling towers with planks or stages.
- Secure all materials before moving scaffolds.
- Be sure floor surface is clear of obstructions or holes before moving scaffold.
- Be sure there are no overhead obstructions or electric power lines in the path of rolling scaffold.
- Rolling towers must only be used on level surfaces.
- Move rolling towers by pushing at the base level only. Do not pull from the top.

6.16 Guidelines for Aerial Lifting Equipment

The SHeD verification procedure to ensure compliance with the requirements listed in this section, shall be accomplished by reviewing HASP's (Health and Safety Plans), and on site safety inspections.

6.16.1 Types of Aerial Lifting Equipment—Scissor and Boom Lifts

Supervisors are to assure the operation of any personnel lifting equipment is restricted to those who have gone through training, including the pre-use inspection, inspecting the worksite, traveling with the equipment, completing the work, parking, and all applicable manufacturers operational procedures.

6.16.2 All Aerial Lifting Equipment

- Personnel using personal fall arrest systems while working on aerial lifts at heights six feet or more above a lower level comply with §1926.502(d) of subpart M, specifically:
    - Personal fall arrest systems, when stopping a fall, shall:...
      (iii) be rigged such that an employee can neither free fall more than 6 feet (1.8 m), nor contact any lower level. [§1926.502(d)(16)(iii)]
    - As has been the Agency's longstanding policy, an employer may comply with OSHA's fall protection requirements for aerial lifts in one of three ways:
        - Use of a body belt with a tether anchored to the boom or basket (fall restraint system),
        - Use of a body harness with a tether (fall restraint system), or
        - Use of a body harness with a lanyard (fall arrest system).
- Personnel shall not enter or leave the platform when it is elevated unless 100 percent tie-off is achieved and SHeD has given approval.
- Select the most appropriate aerial lifting equipment for the specific location, including height and reach.
- Personnel shall remain substantially within the confines of the work platform.
- Personnel shall stand on the floor of the aerial lifting equipment only, not on the handrails or items such as ladders, scaffolding, or boxes, either placed on the platform floor or handrails.

6.17 Scissor Lifts

The SHeD verification procedure to ensure compliance with the requirements listed in this section, shall be accomplished by reviewing HASP's (Health and Safety Plans), and on site safety inspections.

Fall protection shall be worn in accordance with the manufacturer's recommendations. All guardrails shall meet the manufacturer's requirements.

6.17.1 Characteristics of a Scissor Lift

- Controls on the platform
- Large working platform

- Electrically- or propane-powered
- For use in working around and “not” over equipment
- Safety rail around lifting platform
- Scissor lift action
- Kick plate on floor of platform

6.17.2 Recommended Scissor Lift Safety Checklist

- Always check the jobsite for unsafe working conditions.
- Inspect the machine before using—pinch points, pins at swivel points, hydraulic hoses, and cylinders for scoring and leaks. Do not use the machine if it is malfunctioning in any way.
- DO NOT override any hydraulic, mechanical, or electrical safety devices.
- Make sure the platform rail holding bolts are secure.
- Always distribute the load evenly over the platform floor area.
- A scissor lift is only safe on a level surface. Be sure the surface is flat and level.
- Never extend scissor lift with railings folded down.
- Electrocution is always a danger. Be aware of high-voltage wires in the area where you are working.
- Never move a scissor lift in the raised position. Lower first, then after checking for a level surface and overhead obstructions, raise lift.
- DO NOT lean over any platform guardrails to perform work.
- DO NOT use ladders or scaffolding on the platform to obtain greater height.
- DO NOT drive on uneven, sloping, or soft terrain as this is hazardous and must be avoided.
- Hardhats shall be worn by all personnel in the work platform.
- Do not use machine if your physical or mental condition is uncertain in any way.
- When the machine is not in use, disable controls to prevent unauthorized use.

6.18 Boom Lifts

The SHeD verification procedure to ensure compliance with the requirements listed in this section, shall be accomplished by reviewing HASP’s (Health and Safety Plans), and on site safety inspections.

All personnel in the platform of boom lifts shall wear fall protection devices at all times.

6.18.1 Characteristics of a Boom Lift

- Used in areas where space is limited (especially for working over machinery or approaching overhead wires)
- Works on a hydraulic telescopic reach principle
- The operator operates the controls from the bucket or cage
- May have outrigger legs to add stability
- May be electrically- or propane-powered

6.18.2 Recommended Boom Lift Safety Checklist

- Visually inspect the boom lift before it is used. Report any defects to supervisor. Do not use equipment if it is defective.

- Check for overhead obstructions and electrical lines.
- Ensure that the load on the boom lift is within the manufacturer's rated capacity.
- Ensure that outriggers and stabilizers are used, if the manufacturer's instructions so require.
- Ensure that all gates to work platform are closed.
- The operator and passenger(s) shall wear a harness and be connected to the boom lift with a lanyard at the work platform position.
- Railings, ladders, or any other device in or on the work platform shall not be used to achieve additional working height or reach.
- Any loading, which includes a horizontal load, shall be avoided unless the boom lift is designed for that application.
- The operator shall observe whether there are any defects in the equipment during all operations and stop and correct them as necessary.
- Secure tools and equipment.

7.0 RECORDS

Fall prevention Plan (NASA C-979) shall be maintained by the organization generating the form.

Organizational Work Instructions shall be maintained by each organizations competent person.

REFERENCES

Document number	Document name
ANSI Z 359	Fall Protection Code
Title 29 Code of Federal Regulations Part 1926	Safety and Health Regulations for Construction, Subpart M
	Construction Basic Safety Manual Ohio Division of Safety & Hygiene Bureau of Workers Compensation
NPR 8715.3C	NASA General Safety Program Requirements

APPENDIX A.—DEFINITIONS AND ACRONYMS

Anchorage.—Secure point of attachment for a lifeline or lanyard.

Body harness.—Body support device with straps which may be secured about the employee in a manner that will distribute the fall arrest forces over at least the thighs, pelvis, waist, chest, and shoulders with means for attaching it to other components of a personal fall arrest system.

Competent person.—Individual designated by the employer to be responsible for the immediate supervision, implementation, and monitoring of the employer's managed fall protection program, who, through industry-recognized training and knowledge, is capable of identifying, evaluating, and addressing existing and potential fall hazards, and who has the employer's authority to take prompt corrective action with regard to such hazard.

Controlled access zone (CAZ).—Area in which certain work (e.g., overhand bricklaying) may take place without the use of guardrail systems, personal fall arrest systems, or safety net systems and access to the zone is controlled

angerous equipment.—Equipment such as galvanizing tanks, degreasing units, machinery, electrical equipment, and other units which, as a result of form or function, may be hazardous to employees who fall onto or into such equipment.

Equivalent.—Alternative designs, materials, or methods to protect against a hazard, which the employer can demonstrate will provide an equal or greater degree of safety for employees than the methods, materials, or designs specified in the standard.

Failure.—Load refusal, breakage, or separation of component parts. Load limit is the point where the ultimate strength is exceeded.

Fall arrest system.—System that will stop a worker's fall before the worker hits the surface below.

Fall protection system.—Any of the following when used to protect a worker from fall or minimize the risk from falling:

- guardrails
- safety belt or full body harness with a lanyard and/or lifeline and an anchor, and their related equipment
- safety net
- control zone
- safety monitor with a control zone
- other procedures acceptable to SHED

Fall restraint system.—Work positioning system used to prevent a worker from falling from a work position, or a travel restriction system such as guardrails or a personal fall protection system to prevent a worker from traveling to an edge from which the worker could fall.

Free fall distance.—Distance from the point where the worker would begin to fall to the point where the fall arrest system would begin to cause deceleration of the fall.

Full body harness.—Body support device consisting of connected straps designed to distribute a fall arresting force over at least the thigh, shoulders, and pelvis, with provision for attaching a lanyard, lifeline, or other components.

Glenn Research Center at Lewis Field and Plum Brook Station (GRC)

Guard.—Protective barrier around an opening in a floor or along the open sides of stairs or a ramp, landing, balcony, mezzanine, raised walkway, or any other area to prevent a fall to a lower level, or inadvertent entry into a dangerous area.

Guardrail.—Guard consisting of a top rail 40 to 44 in. (102 to 112 cm) above the work surface, and an intermediate rail located approximately midway between the underside of the top rail and the top of the toeboard, if one is provided, or the work surface if no toeboard is provided.

Hole.—Gap or void, 2 in. (5.1 cm) or more in its least dimension, in a floor, roof, or other walking/working surface.

Horizontal lifeline system.—System composed of a synthetic or wire rope, installed horizontally between two anchors, to which a worker attaches a personal fall protection system.

Lanyard.—Rope suitable for supporting one person. One end is fastened to a safety belt or harness and the other end is secured to a substantial object or a safety line.

Low-slope roof.—Roof having a slope less than or equal to 4 in 12 (vertical to horizontal).

Lower levels.—Areas or surfaces to which an employee can fall. Such areas or surfaces include, but are not limited to, ground levels, floors, platforms, ramps, runways, excavations, pits, tanks, material, water, equipment, structures, or portions thereof.

Lifeline.—Synthetic or wire rope, rigged from one or more anchors, to which a worker's lanyard or other part of a personal fall protection system is attached.

Opening.—Gap or void 30 in. (76 cm) or more high and 18 in. (48 cm) or more wide, in a wall or partition, through which employees can fall to a lower level.

Overhand bricklaying and related work.—Overhand bricklaying is the process of laying bricks and masonry units such that the surface of the wall to be jointed is on the opposite side of the wall from the mason, requiring the mason to lean over the wall to complete the work. Related work includes mason tending and electrical installation incorporated into the brick wall during the overhand bricklaying process.

Personal fall protection system.—Individual worker’s fall protection system, composed of a safety belt or full body harness, lanyard, lifeline, and any other connecting equipment, that is used to secure the worker to an individual anchor or to a horizontal lifeline system.

Personal fall arrest system.—System designed to arrest an employee in a fall. It consists of anchorage, connectors, and body harness. A lanyard, deceleration device, lifeline, or combinations of these may be included.

Qualified person.—One who, by possession of a recognized degree, certificate, professional standing, extensive knowledge, training, and experience, has successfully demonstrated his/her ability to solve or resolve problems related to the subject matter, the work, or the project.

Roof.—Exterior surface on the top of a building. This does not include floors or formwork which, because a building has not been completed, temporarily becomes the top surface of a building.

Roofing work.—Hoisting, storage, application, and removal of roofing materials and equipment, including related insulation, sheet metal, and vapor barrier work, but not including the construction of the roof deck.

Safety monitor system.—System is a safety system in which a competent person is responsible for recognizing and warning employees of fall hazards.

Steep roof.—Roof having a slope greater than 4 in 12 (vertical to horizontal).

Unprotected sides and edges.—Any side or edge (except at entrances to points of access) of a walking/working surface, for example, floor, roof, ramp, or runway, where there is no wall or guardrail system at least 39 in. (1.0 m) high.

Walking/working surface.—Any surface, whether horizontal or vertical, on which an employee walks or works, including but not limited to floors, roofs, ramps, bridges, runways, formwork, and concrete reinforcing steel but not including ladders, vehicles, or trailers, on which employees must be located to perform their job duties.

Warning line system.—Barrier erected on a roof to warn employees they are approaching an unprotected roof side or edge, and designates an area in which roofing work may take place without the use of guardrail, body harness, or safety net systems to protect employees in the area.

Contents

1.0 PURPOSE 2
2.0 APPLICABILITY 2
3.0 BACKGROUND 2
4.0 POLICY 2
5.0 RESPONSIBILITIES 2
5.1 Safety and Health Division 2
5.2 Facilities Division 2
5.3 Contracting Officer's Technical Representative 3
5.4 Requestor 3
5.5 Employees 4
6.0 REQUIREMENTS 4
6.1 Training Requirements (*GLM–QS–1700.1*) 4
6.2 General Program Requirements (*29 CFR 1926, Subpart P*) 4
6.2.1 Requestor's Health and Safety Plan Requirements (*GLM–QS–1700.1*) 5
6.3 Permit Requirements (*GLM–QS–1700.1*) 5
6.4 Rescue Procedures (*GLM–QS–1700.1*) 6
6.5 Audits and Inspections (*29 CFR 1910.146* and *GLM–QS1700.1*) 6
7.0 RECORDS 6
8.0 REFERENCES 6
APPENDIX A.—Definitions and Acronyms 7

Chapter 35—Digging, Trenching, and Excavating

NOTE: *The current version of this chapter is maintained and approved by the Safety and Health Division (SHeD). The last revision date of this chapter was July 2012. The current version is located at http://smad-ext.grc.nasa.gov/shed/pub/gsm/gsm-manual.pdf. Approved by: Chief of Safety and Health Division.*

1.0 PURPOSE

This chapter provides guidelines to ensure the safety of workers or visitors in or around excavation activities or ground penetration activities performed at the Glenn Research Center (GRC). These requirements apply to all work involving excavation operations.

2.0 APPLICABILITY

This chapter is applicable to all civil servant and contractor employees assigned to GRC and to all NASA-controlled, Government-owned facilities associated with GRC.

3.0 BACKGROUND

Excavation and trenching are among the most hazardous construction operations. Cave-ins pose the greatest risk and are much more likely than other excavation-related accidents to result in worker fatalities. Other potential hazards include falls, falling loads, hazardous atmospheres, and incidents involving mobile equipment. There are approximately 24 underground utility systems at GRC. This has caused potentially serious situations during construction and maintenance activities. A decision was made to evaluate all ground penetrating activities to ensure personnel and system safety.

4.0 POLICY

It is GRC's policy to evaluate all excavation and ground penetration activities to minimize the potential of cave-ins, environmental contamination, underground utility damage, or contact with subsurface encumbrances. All digging, trenching, or excavation activities shall be in compliance with the requirements of 29 Code of Federal Regulations (CFR) 1926, Subpart P, Excavations, and the Glenn Safety Manual. A site-specific Health and Safety Plan (HASP) may also be required by SHeD.

5.0 RESPONSIBILITIES

5.1 Safety and Health Division Chief

- The SHeD Chief shall maintain this chapter to meet current regulations and standards provided by the Occupational Safety and Health Administration (OSHA) and NASA Headquarters and organizations providing nationally accepted consensus standards. Evaluate excavations to determine if they meet the criteria provided by 29 CFR 1926, Subpart P, and the Glenn Safety Manual.

5.2 Review the construction drawings for digging, trenching, excavating and ground penetration activities and permit(s).Institutional Chief Safety Officer (QB)

The Institutional Chief Safety Officer shall

- Evaluate this program annually to verify compliance with this chapter and applicable NASA requirements

5.3 Facilities Division (FD) Chief

The Facilities Division Chief shall:

- Control the construction and maintenance activities of the Center
- Track and control contractors and subcontractors performing those activities
- Manage facilities, buildings, and systems for which those activities will be performed
- Ensure the Soil Coordinator is notified of all excavation activities at Lewis Field.
- Ensure the Underground Record Drawings are updated in a timely manner.

- Ensure underground utilities are located prior to these activities to the extent possible.

5.4 Energy and Environmental Management Office (FE) Chief

The Energy and Environmental Management Office Chief shall:

- Ensure requirements of the Environmental Programs Manual, Chapter **23**, Handling, Reuse, and Disposal of Soil, are fulfilled
- Ensure adequate environmental control measures have been identified and implemented
- Complete the Soil Determination Checklist (NASA **C–133**) and determine the appropriate soil disposal method

5.5 Contracting Officer's Technical Representative

The Contracting Officer's Technical Representative (COTR) shall ensure that:

- Contractor employees comply with the GRC digging, trenching, excavating and ground penetration requirements as given in this chapter
- All items outlined in the permit are properly defined and required information is completed
- Known underground utilities and structures have been identified, physically located, and marked on the excavation drawing(s)
- The requirements of the above identified reference documents are met
- Digging, trenching, excavation and ground penetration activities are conducted in a safe manner and avoid the underground utilities and structures identified on the Excavation Permit

5.6 Requestor

The requestor is a member of a GRC organization, support service contractor, or construction contractor performing Digging, trenching, excavating and ground penetration activities. The requestor shall:

- Initiate a NASA Form C-927, Digging, Trenching, and Excavation Permit, and submitting it to the reviewers designated on the form.
- Request an environmental review of the soil characterization and disposal requirements
- Ensure that all personnel working at the jobsite are trained and aware of the hazards of digging, trenching, excavating and ground penetration Ensure that all items outlined in the permit request are properly defined and resolved prior to operations involving digging, trenching, excavating and ground penetration activities to avoid damage to utilities and structures identified on the construction drawings.
- Perform digging, trenching, excavating and ground penetration activities in a safe manner, avoiding underground utilities and structures identified on the Excavation Permit
- Notify the Emergency Dispatch and their supervisor (if a civil servant) or their COTR (if a contractor) if an unexpected underground utility or structure is found during the activity or if an underground utility or structure is hit or broken during the activity (The requestor will notify the emergency dispatch at 911 if using a NASA internal telephone or if using a cell phone dial 216–433–8888 at Lewis Field or 419–621–3222 at Plum Brook Station.) It is the Supervisor's or COTR's responsibility to notify SHeD.
- Comply with all the requirements of the above listed reference documents and other regulations in regard to safe performance of the job.
- Coordinate their work with the lab utilities to assure that related activities such as utility shutdown are addressed
- Assign a competent person who has been trained for the hazards of digging, trenching, excavating and ground penetration
- Ensure a daily documented inspection of the excavation is performed by a competent person;

- Ensure all work ceases if problems are found until such time as the excavation is made safe again for entry

5.7 Employees

- For the purposes of this Chapter, the term "employee" may be any person employed to perform work at GRC, whether a civil servant or contractor.
- Each employee shall follow established procedures, enter an excavation only after receiving training, and have a complete understanding of the safe work practices to be followed while working in an excavation area or surroundings.
- Employees shall wear required personal protective equipment (PPE) in accordance with the requirements of their employer's site-specific HASP.

6.0 REQUIREMENTS

6.1 Training Requirements (*GLM–QS–1700.1*)

- All individuals involved in digging, trenching, excavating and ground penetration activities shall be trained in the hazards associated with these activities and in the emergency action to take if an underground utility or structure is hit or broken during these activities.
- Confined Space Entry Training (SATERN Course GRC-4R0241) will be required if an excavation has been determined to be a Permit-Required Confined Space.
- All personnel involved in a "Hazardous Waste" excavation shall have OSHA 40-hr HAZWOPER training. Hazardous waste areas shall be determined by FE and documented on the NASA **C–133**.

> 6.1 Verification of these requirements is done by SHeD during the review of the various activity documents including the HASP or equivalent, appropriate permits, or verbal response in the event of an emergency excavation process.

6.2 General Program Requirements (*29 CFR 1926, Subpart P*)

- Excavations greater than 4 ft in depth may be considered to be confined spaces. As such, these shall be evaluated by SHeD with regard to existing and potential hazards to determine if the excavation shall be considered a permit-required confined space. Further regulations regarding confined spaces follow:
  - Between 4 and 20 ft, SHeD shall evaluate and determine if an excavation is to be considered a permit-required confined space based upon the known and potential hazards.
  - Below 20 ft in depth, all excavations shall be considered to be permit-required confined spaces and the requirements of the Glenn Safety Manual, Chapter **16**, Confined Space Entry, shall be in effect.
- Employees who work in or around excavations must be provided training according to their work activities.
- The excavation or trench must be stepped, sloped or supported as required to comply with OSHA requirements.
- Traffic around the site must be controlled, and barricades, signs, and/or flag persons used as needed to control both vehicular and pedestrian traffic.
- Buildings, structures, and utilities must be protected and suitable precautions taken if there is any possibility they may be disturbed by the excavation.
- Employees must use PPE as required by their approved HASP.
- Each department covered by this program must appoint one or more competent person(s) to ensure compliance with this program. Excavation work may involve safety hazards not addressed by this program.
- Work conducted on or around electrical utilization systems addressed using requirements from the Electrical Safety Program, Glenn Safety Manual, Chapter **8**.

- Work that may impact existing utilities that need to be locked and tagged out by following requirements from the Lockout/Tagout Program, Glenn Safety Manual, Chapter **9**.
- Work conducted in areas where hazardous atmospheres or gases could accumulate (e.g., landfills, gas distribution lines, or hazardous materials storage locations) are covered under the Confined Space Program, Glenn Safety Manual, Chapter **16**, Confined Space Entry.
- Work requiring burning or welding shall require a Hot Work Permit prior to the start of any work of this nature in or around the trench, ditch, or excavated site.
- The hazards to buildings, personnel, and utilities presented by fuel storage and refueling activities of excavating equipment shall be addressed prior to the start of excavating activities.

6.2 Verification of these requirements is done by SHeD during the review of the various activity documents including the HASP or equivalent, appropriate permits, or verbal response in the event of an emergency excavation process.

6.2.1 Requestor's Health and Safety Plan Requirements (*GLM–QS–1700.1*)

The requestor identifies a task requiring digging, trenching, excavating or ground penetration of soil or surfacing material. The following information is required and shall be included in the HASP as a minimum. Please refer to the Glenn Safety Manual, Chapter **17**, Construction Safety, for a description of the HASP.

- Location where the excavation will take place
- Identify the type and condition of soil or surfacing material
- Length and depth of the excavation
- Identification of means of ingress and egress
- Identification of underground utilities
- Define any vehicular traffic exposure
- Identify the competent person(s) at the job site
- Identify all related equipment and materials and chemicals to be used at the site
- Assess confined space requirements
- Define protective system and equipment to be used
- Define emergency procedures
- Define how the requirements of the NASA **C–133, Soil Determination Checklist,** form will be met

6.2.1 Verification of these requirements is done by SHeD during the review of the various activity documents including the HASP or equivalent, appropriate permits, or verbal response in the event of an emergency excavation process.

6.3 Permit Requirements (*GLM–QS–1700.1*)

To obtain an excavation permit

- The requestor implements the requirements of GRC Environmental Programs Manual, Chapter **23**, Handling, Reuse, and Disposal of Soil.
- The requestor completes Part I of the Excavation Permit and submits it to the requestor's supervisor. If the requestor is a contract employee, the Excavation Permit is submitted to the contractor's COTR.

- The requestor's supervisor or contractor's COTR reviews the Excavation Permit to ensure that known underground utilities and structures have been identified and physically located and marked on a drawing.
- If all safety concerns have been adequately addressed, the SHeD safety reviewer approves the Excavation Permit by signing and dating the permit. If SHeD disapproves the permit, it is returned to the requestor with an explanation of the safety deficiencies.
- If all environmental concerns have been adequately addressed, the FE reviewer approves the Excavation Permit by signing and dating the permit. If FE disapproves the permit, it is returned to the requestor with an explanation of the environmental deficiencies.

6.3 Verification of these requirements is done by SHeD during the review of the various activity documents including the HASP or equivalent, appropriate permits, or verbal response in the event of an emergency excavation process.

6.4 Rescue Procedures (*GLM–QS–1700.1*)

- Only trained and designated personnel may perform entry rescues. These personnel are provided by offsite municipal fire departments for both Lewis Field and Plum Brook.
- Any rescue requires the immediate notification of the emergency dispatch. Radio is the preferred method for contacting the emergency dispatcher, but a telephone may be used. The internal telephone number is 911 for both sites. Outside telephone numbers, such as when using a cellular telephone, are 216–433–8888 at Lewis Field and 419–621–3222 at Plum Brook Station.

  Note: *Only the emergency dispatch at Lewis Field or Plum Brook Station shall summon offsite personnel. This is to prevent confusion and delay of response teams as well as maintain the security of both sites.*

6.5 Audits and Inspections (*29 CFR 1910.146* and *GLM–QS1700.1*)

SHeD shall monitor digging, excavation, trenching and ground penetration activities to ensure compliance with this chapter. Significant discrepancies shall be documented in the SHETrak System.

6.5 Verification of these requirements is done by SHeD during the review of the various activity documents including the HASP or equivalent, appropriate permits, or verbal response in the event of an emergency excavation process.

7.0 RECORDS

All permits and associated documentation issued for the purpose of controlling digging, trenching, excavating and ground penetration activities shall be considered part of the construction and/or task documentation. Records retention requirements shall be governed by those of the construction and/or task documents or contract.

8.0 REFERENCES

Document number	Document name
10 CFR 1926, Subpart P	Excavations
NASA NPR 8715.3	NASA Procedural Requirements, NASA General Safety Program Requirements (current revision)
GLM–QS–1700.1	NASA Glenn Safety Manual, Chapter **8**, Electrical Systems Safety
GLM–QS–1700.1	NASA Glenn Safety Manual, Chapter **9**, Lockout/Tagout
GLM–QS–1700.1	NASA Glenn Safety Manual, Chapter **16**, Confined Space Entry
GLM–QS–1700.1	NASA Glenn Safety Manual, Chapter **17**, Construction Safety
GLM–QS–8500.1A	GRC Environmental Programs Manual, Chapter **23**, Handling, Reuse, and Disposal of Soil

APPENDIX A.—DEFINITIONS AND ACRONYMS

Benching.—A method of protecting employees from cave-ins by excavating the sides of an excavation to form one or a series of horizontal levels or steps, usually with vertical or near-vertical surfaces between levels.

Code of Federal Regulations (CFR)

Contracting Officer's Technical Representative (COTR)

Competent person.—Individual who is capable of identifying existing and predictable hazards or working conditions that are hazardous, unsanitary, or dangerous to employees, and who has authorization to take prompt corrective measures to eliminate or control these hazards and conditions.

Confined space.—A space that is large enough and so configured that an employee can bodily enter and perform work and has limited or restricted means of entry or exit and is not designed for continuous employee occupancy.

Excavation.—An excavation is any manmade cut, cavity, trench, or depression in an earth surface that is formed by earth removal that is 1 ft deep or greater. A trench is a narrow excavation (in relation to its length) made below the surface of the ground. In general, the depth of a trench is greater than its width, and the width (measured at the bottom) is not greater than 15 ft. If a form or other structure installed or constructed in an excavation reduces the distance between the form and the side of the excavation to 15 ft or less (measured at the bottom of the excavation), the excavation is also considered to be a trench.

Glenn Mapping System (GMS)

Glenn Research Center (GRC)

Ground Penetration – Penetration for any activity through the soil or other surfacing material such as concrete or asphalt. This includes drilling or pushing probes or posts through the surface.

Health and Safety Plan (HASP)

Hazardous atmosphere.—An atmosphere that is explosive, flammable, poisonous, corrosive, oxidizing, irritating, oxygen-deficient, toxic, or otherwise harmful that may cause death, illness, or injury to persons exposed to it.

Ingress and egress.—An entry and exit, respectively. In trenching and excavation operations, they refer to the provision of safe means for employees to enter or exit an excavation or trench safely.

Occupational Safety and Health Administration (OSHA)

Personal protective equipment (PPE)

Plum Brook Reactor Facility (PBRF)

Protective system.—Refers to a method of protecting employees from cave-ins, from material that could fall or roll from an excavation face or into an excavation, and from the collapse of adjacent structures. Protective systems include support systems, sloping and benching systems, shield systems, and other systems that provide the necessary protection.

Safety and Mission Assurance Directorate (SMAD)

Safety and Health Division (SHeD)

Shield.—A structure that is able to withstand the forces imposed on it by a cave-in and thereby protects employees within the structures. Shields can be permanent structures or can be designed to be portable and moved along as work progresses. Additionally, shields can be either manufactured or job built in accordance with CFR 1926, Subpart P. Shields used in trenches are usually referred to as trench boxes or trench shields.

Sloping.—A method of protecting employees from cave-ins by excavating to form sides of an excavation that are inclined away from the excavations so as to prevent cave-ins. The angle of incline required to prevent a cave-in varies with differences in such factors as the soil type, environment conditions of exposure, and application of exposure and application of surcharge loads.

Support system.—Structures such as underpinning, bracing, and shoring that provide support to an adjacent structure or underground installation or to the sides of an excavation or trench.

Subsurface encumbrances.—Underground utilities, foundations, streams, water tables, transformer vaults, and geological anomalies.

United States Code (U.S.C.)