REVISION HISTORY		
ZONE	REV	DESCRIPTION

1. MATERIAL, FABRICATION AND INSPECTION MUST CONFORM TO SPECIFICATIONS SUPPLIED BY NASA PER SPEC # 3-548642.

2. MATERIAL: AISI 9310 ALLOY STEEL PER AMS 6265M. FORGING PER MIL-F-7190, GRADE A, EXCEPT TENSILE PROPERTIES NOT REQUIRED.

3. REFERENCE:
GEAR OPERATING SPEED: 37,500 RPM
APPROXIMATE WEIGHT: 0.41 LBS.

4. PRIOR TO FABRICATION, MATERIAL MUST PASS ULTRASONIC INSPECTION PER SAE-AMS-2154. ACCEPTANCE PER SECTION 5.5.4, TABLE VI, CLASS LEVEL A.

5. HEAT TREAT REQUIREMENTS AND PROCEDURE: PRIOR TO FINISH MACHINING, CASE HARDNESS: Rc 58-60, CASE DEPTH: .035-.040, CORE HARDNESS: Rc 38-42. FROM ROOM TEMPERATURE, CARBURIZE TO 1,172K (1,650F) FOR 8 HRS. AIR COOL TO ROOM TEMPERATURE. REHEAT TO 922K (1,200F) FOR 2.5 HRS. AIR COOL TO ROOM TEMPERATURE. AUSTENTIZE TO 1,117K (1,550F) FOR 2.5 HRS. SUBZERO COOL TO 180K (-120 F) FOR 3.5 HRS. DOUBLE TEMPER TO 450K (350F) FOR 2.0 HRS. FINISH MACHINE THEN STRESS RELIEVE AT 450K (350F) FOR 2.0 HRS.

6. FURNACE CHART REQUIRED TO BE INCLUDED WITH HEAT TREAT CERTIFICATION.

7. 64 Ra ALL OVER UNLESS OTHERWISE SPECIFIED.

8. BREAK ALL EDGES .010-.020 UNLESS OTHERWISE SPECIFIED.

9. MINIMUM GRINDING RELIEF ON DIAMETER IS ACCEPTABLE IF NECESSARY TO ACHIEVE SPECIFIED DIMENSIONS.

10. ALL FILLETS MUST BLEND WITH ADJOINING SURFACES WITH NO UNDERCUTS AND MUST BE POLISHED SMOOTH WITH NO VISIBLE TOOL MARKS.

11. UNLESS OTHERWISE SPECIFIED ALL FACES AND DIAMETERS MUST BE ⌭ .001 A-B C

12. FINISHED PART MUST PASS DYE PENETRANT INSPECTION PER ASTM-E1417 TYPE 1, METHOD A, SENSITIVITY LEVEL 2. ACCEPTANCE PER MIL-STD-1907, GRADE C. REMOVAL OF DEFECTS BY GRINDING OR POLISHING SHALL BE WITHIN DIMENSIONAL TOLERANCES.

13. PROFILE, LEAD, SPACING AND INDEX CHARTS SHALL BE PROVIDED FOR ALL GEARS. PROFILE AND LEAD CHARTS SHALL BE SUPPLIED FOR BOTH SIDES OF THREE EQUALLY SPACED TEETH ON THE GEARS MEASURED.

14. PROVIDE A LEDGIBLE COPY OF THE MILL CERTIFICATE INCLUDING HEAT NUMBER AND CHEMICAL ANALYSIS, WITH THIS DRAWING NUMBER INCLUDED, WITHIN 7 DAYS OF MATERIAL RECEIPT.

15. ELECTROCHEMICAL ETCH DRAWING PART NUMBER 060928MRA615 ON SPECIFIED SURFACE, PER SAE-AS478, METHOD 7A (ZONE F4).

16. BLACK OXIDE FINISH PER MIL-C-13924 OR EQUIVALENT.

17. BEFORE SHIPPING, PROTECT WITH CONTAMINATION BARRIER SUCH AS WD-40, OR EQUIVALENT. USE NEW AND CLEAN POLYETHYLENE BAG FOR SMALL ITEMS, OR 4 MIL THICK MINIMUM POLYETHYLENE SHEET SEALED WITH PACKAGING TAPE. MARK WITH DRAWING PART NUMBER 060928MRA615 ON TAG ATTACHED TO BAG.

18. TO BE DYNAMICALLY BALANCED BY NASA. SEE ASSEMBLY DRAWING NUMBER 060298MRA605 FOR DETAILS.

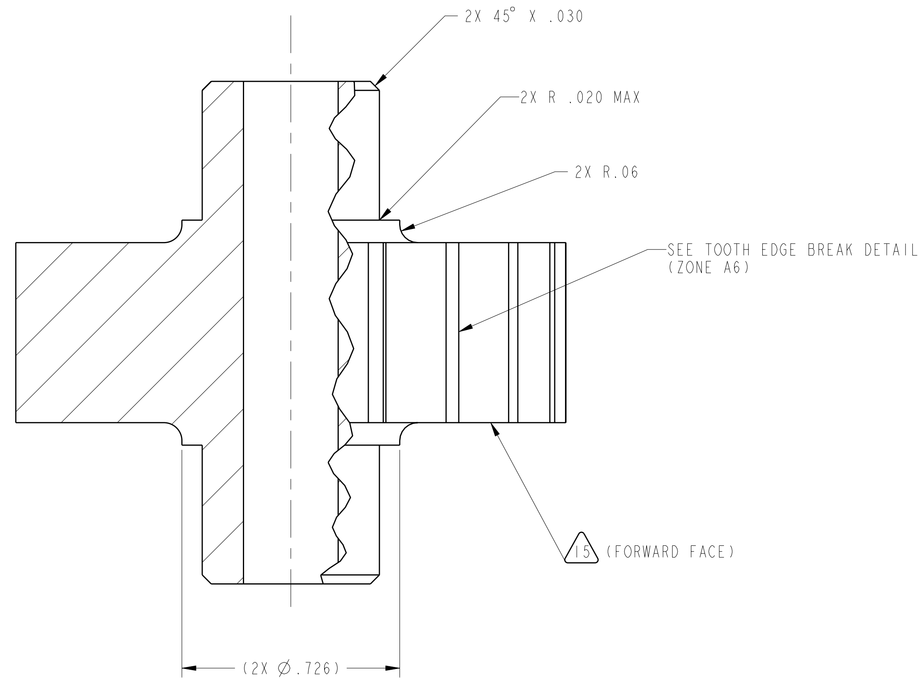

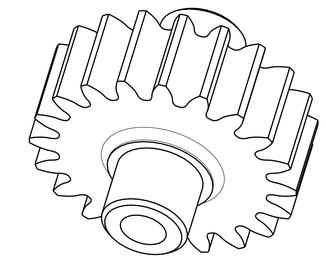

ISO VIEW
SCALE 2/1

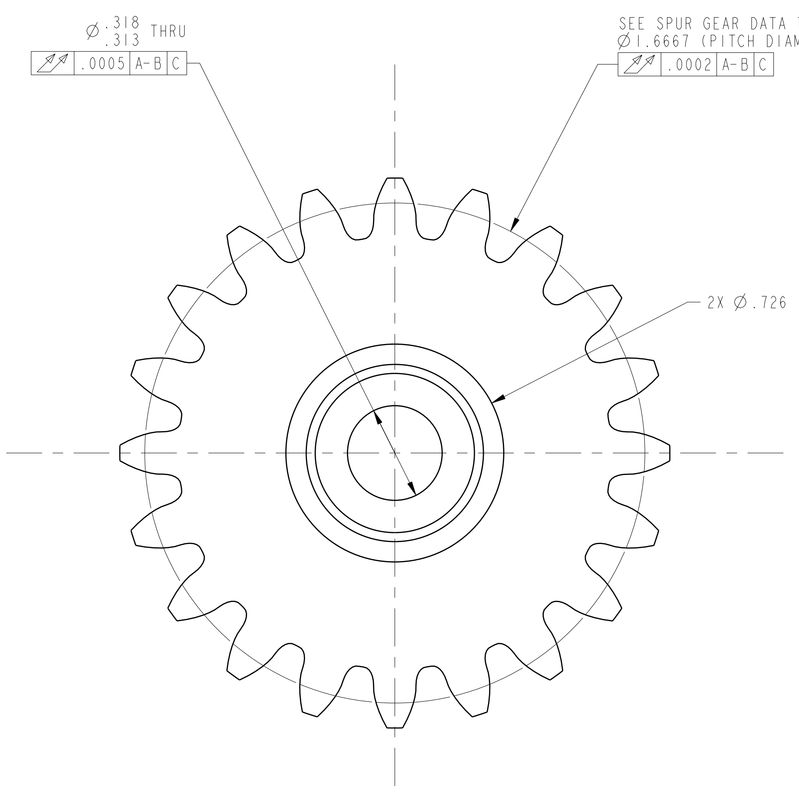

FORWARD FACE

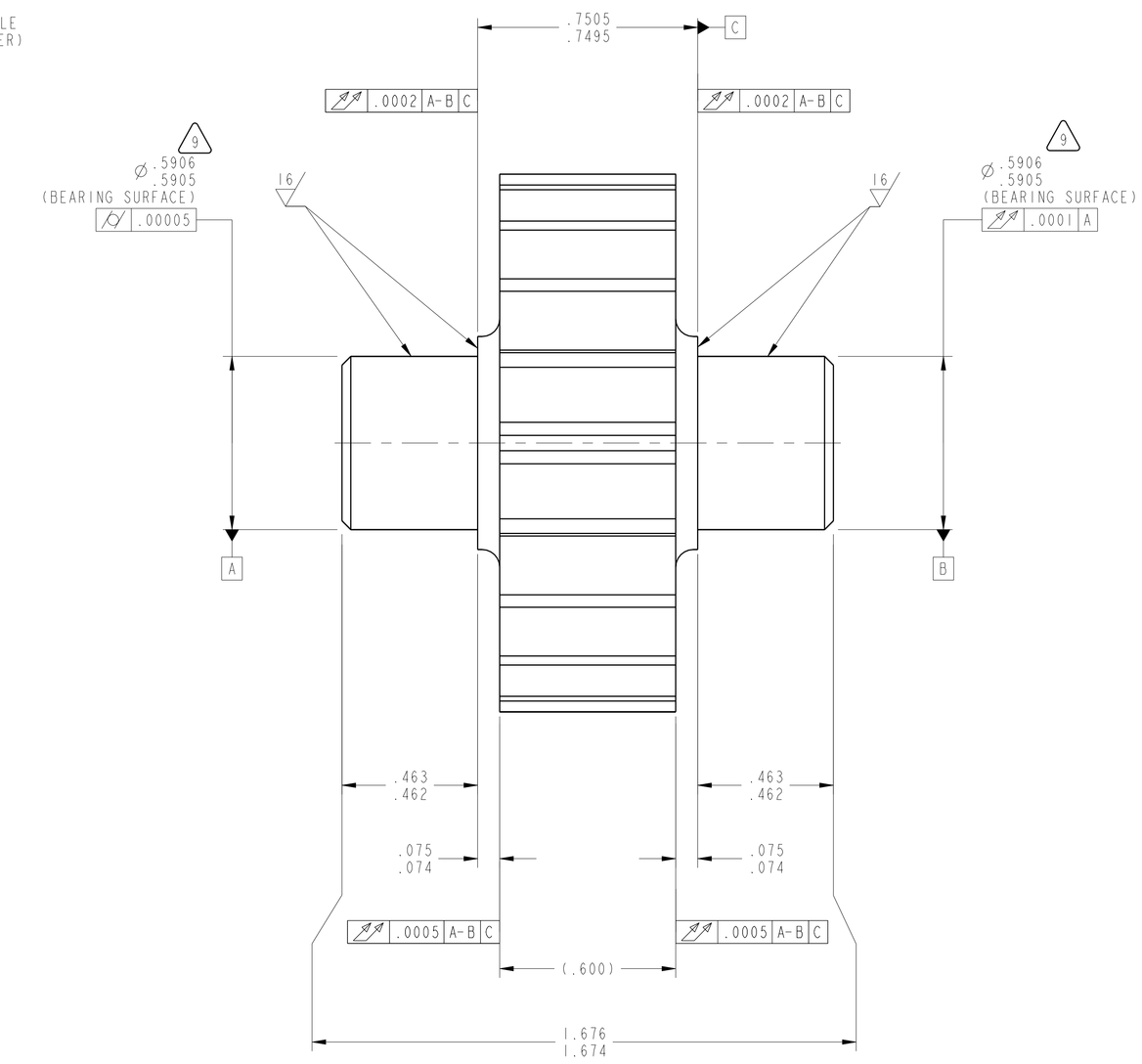

SPUR GEAR DATA TABLE

AGMA CLASS/QUALITY/TOLERANCE NUMBER	13
TYPE	EXTERNAL
NUMBER OF TEETH	20
DIAMETRAL PITCH	12.0
PRESSURE ANGLE (DEGREES)	20°
ADDENDUM	0.0717
BASE DIAMETER	1.5662
TRUE INVOLUTE FORM (TIF) DIAMETER	1.5666
OUTSIDE DIAMETER	1.8101
INNER DIAMETER	N/A
PITCH DIAMETER	1.6667
ROOT DIAMETER	1.4716
CHORDAL TOOTH THICKNESS	0.1230
FACE WIDTH	0.600
ROOT FILLET	0.020
TIP RELIEF	0.0002
ROLL ANGLE AT START OF TIP RELIEF (DEGREES)	23.5
PROFILE CROWNING AMOUNT	0.0003
RACK TIP RADIUS	0.020
MEASURING PIN SIZE	0.144
DIMENSION OVER PINS	1.8475
DIMENSION BETWEEN PINS	N/A
MATING GEAR PART NUMBER	060928MRA612 & A613
TOOTH FINISH	16 µIN.

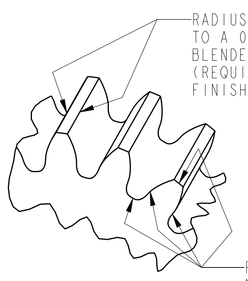

TOOTH EDGE BREAK DETAIL
NO SCALE

IDLER

060298MRA605	2-SPEED TRANS	UNLESS OTHERWISE SPECIFIED DIMENSIONS ARE IN INCHES X.X ± .03 X.XX ± .005 X.XX ± .01 ANGLE ± .5° MACHINED SURFACES 63/ INTERPRET DIMENSIONS AND TOLERANCES PER ASME Y14.5M - 1994	DATE	2011/12/14
NEXT ASSY	USED ON	THIRD ANGLE PROJECTION	MODELER	DEZ / R. DETAMORE
APPLICATION			PRIMARY CONTACT	DER / M. STEVENS
			STATE	Released
			WINDCHILL PRODUCT	060928_Variable_Speed_Transmissio
			MODEL	A615_GEAR_IDLER

NATIONAL AERONAUTICS AND SPACE ADMINISTRATION
JOHN H. GLENN RESEARCH CENTER
LEWIS FIELD, CLEVELAND, OHIO

TITLE: GEAR, IDLER

SIZE	CAGE CODE	DWG NO	REV
E	1QFP5	060928MRA615	-

SCALE: 4/1 SHEET 1 OF 1

DWG NO 060928MRA615 SH 1 REV -

NAME:BERTAMORE OBECT:A615_GEAR_IDLER DATE:07-Dec-11 13:36:09