REVISION HISTORY		
ZONE	REV	DESCRIPTION

1. MATERIAL, FABRICATION AND INSPECTION MUST CONFORM TO SPECIFICATIONS SUPPLIED BY NASA PER SPEC # 3-548642.

2. MATERIAL: AISI 9310 ALLOY STEEL PER AMS 6265M. FORGING PER MIL-F-7190, GRADE A, EXCEPT TENSILE PROPERTIES NOT REQUIRED.

3. REFERENCE:
GEAR OPERATING SPEED: 15,000 RPM
APPROXIMATE WEIGHT: 2.12 LBS.

4. PRIOR TO FABRICATION, MATERIAL MUST PASS ULTRASONIC INSPECTION PER SAE-AMS-2154. ACCEPTANCE PER SECTION 5.5.4, TABLE VI, CLASS LEVEL A.

5. HEAT TREAT REQUIREMENTS AND PROCEDURE: PRIOR TO FINISH MACHINING, CASE HARDNESS: Rc 58-60, CASE DEPTH: .035-.040, CORE HARDNESS: Rc 38-42. FROM ROOM TEMPERATURE, CARBURIZE TO 1,172K (1,650F) FOR 8 HRS. AIR COOL TO ROOM TEMPERATURE. REHEAT TO 922K (1,200F) FOR 2.5 HRS. AIR COOL TO ROOM TEMPERATURE. AUSTENTIZE TO 1,117K (1,550F) FOR 2.5 HRS. SUBZERO COOL TO 180K (-120 F) FOR 3.5 HRS. DOUBLE TEMPER TO 450K (350F) FOR 2.0 HRS. FINISH MACHINE THEN STRESS RELIEVE AT 450K (350F) FOR 2.0 HRS.

6. FURNACE CHART REQUIRED TO BE INCLUDED WITH HEAT TREAT CERTIFICATION.

7. 64 Ra ALL OVER UNLESS OTHERWISE SPECIFIED.

8. MACHINE TO PROVIDE INTERFERENCE FIT WITH DRAWING PART NUMBER 060928MRA614.

9. BREAK ALL EDGES .010-.020 UNLESS OTHERWISE SPECIFIED.

10. ALL FILLETS MUST BLEND WITH ADJOINING SURFACES WITH NO UNDERCUTS AND MUST BE POLISHED SMOOTH WITH NO VISIBLE TOOL MARKS.

11. UNLESS OTHERWISE SPECIFIED ALL FACES AND DIAMETERS MUST BE ⌀ .001 A B

12. FINISHED PART MUST PASS DYE PENETRANT INSPECTION PER ASTM-E1417 TYPE 1, METHOD A, SENSITIVITY LEVEL 2. ACCEPTANCE PER MIL-STD-1907, GRADE C. REMOVAL OF DEFECTS BY GRINDING OR POLISHING SHALL BE WITHIN DIMENSIONAL TOLERANCES.

13. PROFILE, LEAD, SPACING AND INDEX CHARTS SHALL BE PROVIDED FOR ALL GEARS. PROFILE AND LEAD CHARTS SHALL BE SUPPLIED FOR BOTH SIDES OF THREE EQUALLY SPACED TEETH ON THE GEARS MEASURED.

14. PROVIDE A LEDGIBLE COPY OF THE MILL CERTIFICATE INCLUDING HEAT NUMBER AND CHEMICAL ANALYSIS, WITH THIS DRAWING NUMBER INCLUDED, WITHIN 7 DAYS OF MATERIAL RECEIPT.

15. ELECTROCHEMICAL ETCH DRAWING PART NUMBER 060928MRA611 ON SPECIFIED SURFACE, PER SAE-AS478, METHOD 7A (ZONE E3).

16. BLACK OXIDE FINISH PER MIL-C-13924 OR EQUIVALENT.

17. BEFORE SHIPPING, PROTECT WITH CONTAMINATION BARRIER SUCH AS WD-40, OR EQUIVALENT. USE NEW AND CLEAN POLYETHYLENE BAG FOR SMALL ITEMS, OR 4 MIL THICK MINIMUM POLYETHYLENE SHEET SEALED WITH PACKAGING TAPE. MARK WITH DRAWING PART NUMBER 060928MRA611 ON TAG ATTACHED TO BAG.

18. TO BE DYNAMICALLY BALANCED BY NASA. SEE ASSEMBLY DRAWING NUMBER 060928MRA605 FOR DETAILS.

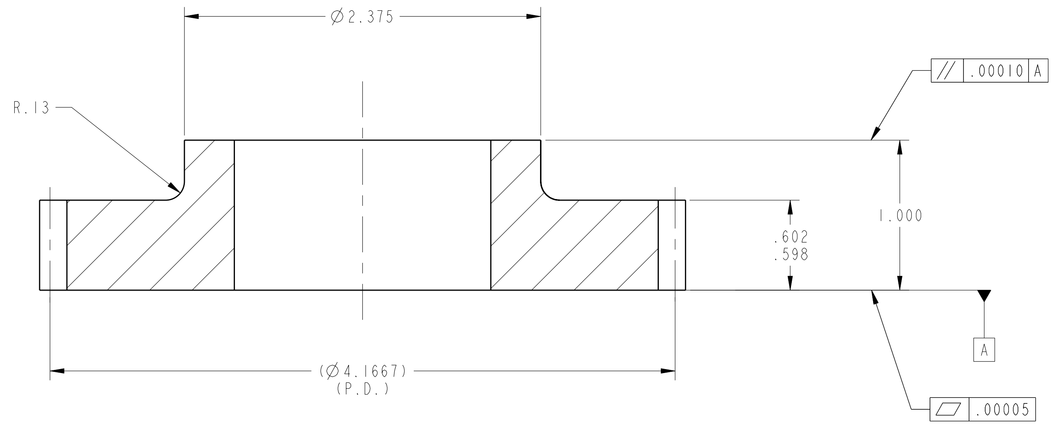

SECTION **A-A**

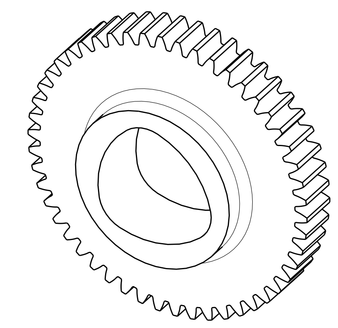

ISO VIEW
SCALE 1/1

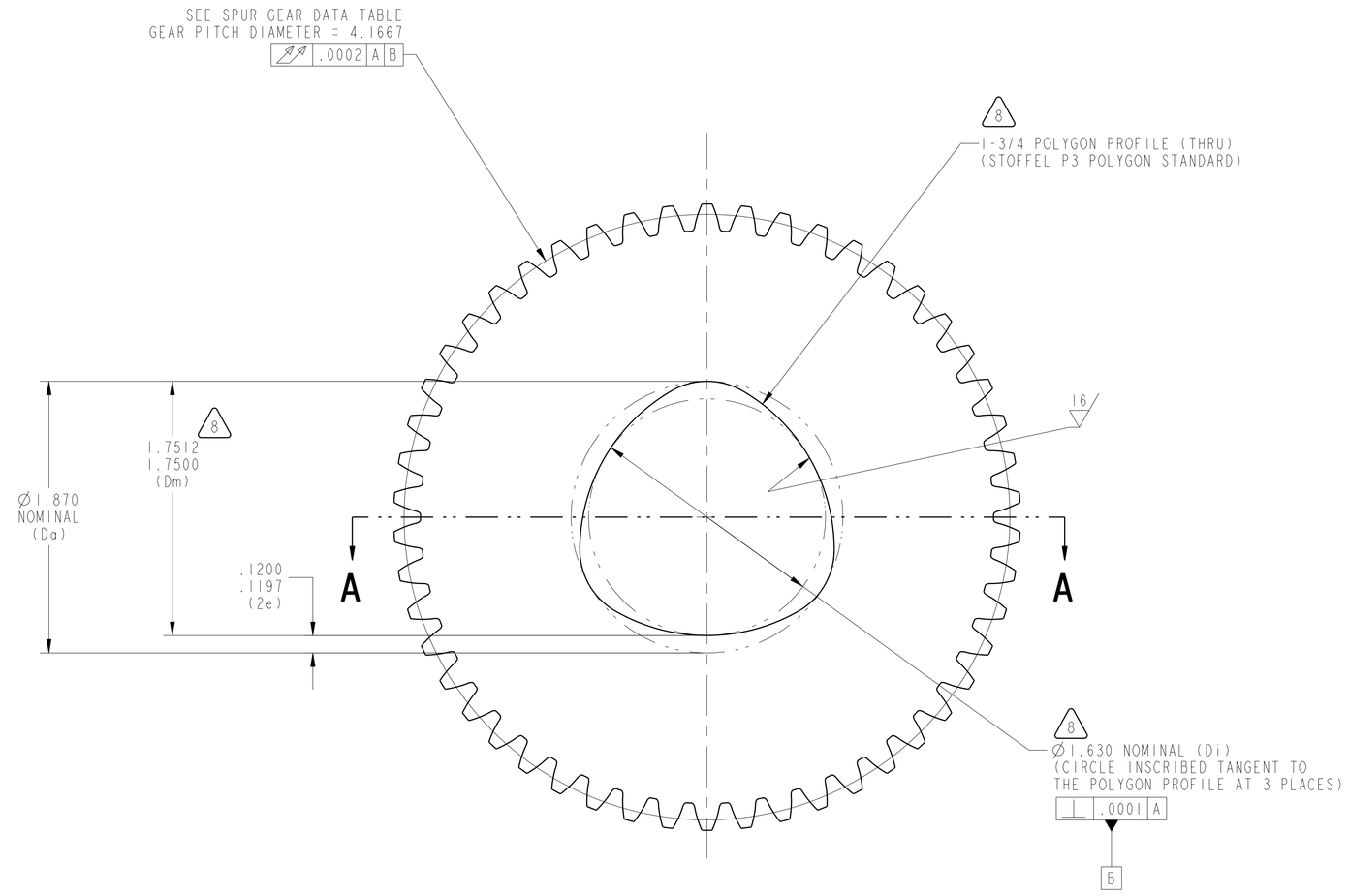

FORWARD FACE

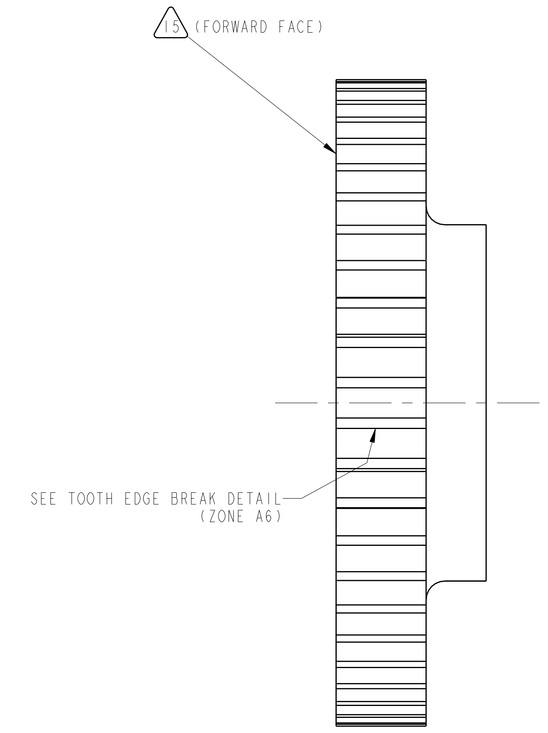

SPUR GEAR DATA TABLE

AGMA CLASS/QUALITY/TOLERANCE NUMBER	13
TYPE	EXTERNAL
NUMBER OF TEETH	50
DIAMETRAL PITCH	12
PRESSURE ANGLE (DEGREES)	20°
ADDENDUM	0.0717
BASE DIAMETER	3.9154
TRUE INVOLUTE FORM (TIF) DIAMETER	4.0550
OUTSIDE DIAMETER	4.3101
INNER DIAMETER	NA
PITCH DIAMETER	4.1667
ROOT DIAMETER	3.9584
CHORDAL TOOTH THICKNESS	0.1230
FACE WIDTH	0.600
ROOT FILLET	0.020
TIP RELIEF	0.0002
ROLL ANGLE AT START OF TIP RELIEF (DEGREES)	22.9°
PROFILE CROWNING AMOUNT	0.0003
RACK TIP RADIUS	0.020
MEASURING PIN SIZE	0.144
DIMENSION OVER PINS	4.3491
DIMENSION BETWEEN PINS	NA
MATING GEAR PART NUMBER	060928MRA613
TOOTH FINISH	16 µIN.

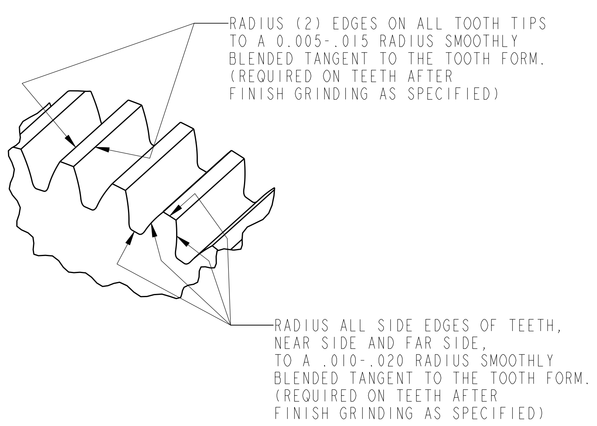

TOOTH EDGE BREAK DETAIL
NO SCALE

SUN

		UNLESS OTHERWISE SPECIFIED DIMENSIONS ARE IN INCHES X.X ± .03 X.XXX ± .005 X.XX ± .01 ANGLE ± .5° MACHINED SURFACES 63 INTERPRET DIMENSIONS AND TOLERANCES PER ASME Y14.5M - 1994	DATE	2011/12/14
			MODELER	DEZ / R. DETAMORE
			PRIMARY CONTACT	DER / M. STEVENS
			STATE	Released
		THIRD ANGLE PROJECTION	WINDCHILL PRODUCT	060928_Variable_Speed_Transmissio
060928MRA605	2-SPEED TRANS		MODEL	A611_GEAR_SUN
NEXT ASSY	USED ON			
APPLICATION				

NATIONAL AERONAUTICS AND SPACE ADMINISTRATION
JOHN H. GLENN RESEARCH CENTER
LEWIS FIELD, CLEVELAND, OHIO

TITLE: GEAR, SUN

SIZE	CAGE CODE	DWG NO	REV
E	1QFP5	060928MRA611	-

SCALE: 2/1 SHEET 1 OF 1

REV - | SH 1 | DWG NO 060928MRA611

NAME:DETAMOR OBJECT:A611_GEAR_SUN DATE:07Dec11 13:33:24