OMB Approval 2700-0042

AMENDMENT OF SOLICITATION/MODIFICATION OF CONTRACT

1. CONTRACT ID CODE	PAGE	OF	PAGE(S)
	1		13

2. AMENDMENT/MODIFICATION NO.	3. EFFECTIVE DATE	4. REQUISITION/PURCHASE REQ. NO.	5. PROJECT NO. *(If applicable)*
7	See Block 16c below.	See Block 12 below.	

6. ISSUED BY CODE

National Aeronautics and Space Administration
NASA Glenn Research Center
Cleveland, Ohio 44135

7. ADMINISTERED BY *(If other than Item 6)* CODE

8. NAME AND ADDRESS OF CONTRACTOR *(No. Street, county, State and ZIP: Code)*

Potential Offerors: Cooling Tower Rehab Solicitation

CODE FACILITY CODE

(4) X

9A. AMENDMENT OF SOLICITATION NO.
NNC12ZFD011E

9B. DATED *(SEE ITEM 11)*
Feb 28, 2012

10A. MODIFICATION OF CONTRACT/ORDER NO.

10B. DATED *(SEE ITEM 13)*

11. THIS ITEM ONLY APPLIES TO AMENDMENTS OF SOLICITATIONS

☒ The above numbered solicitation is amended as set forth in Item 14. The hour and date specified for receipt of Offers ☒ is extended, ☐ is not extended.

Offers must acknowledge receipt of this amendment prior to the hour and date specified in the solicitation or as amended, by one of the following methods:

(a) By completing Items 8 and 15, and returning one (1) copy of the amendment; (b) By acknowledging receipt of this amendment on each copy of the offer submitted; or (c) By separate letter or telegram which includes a reference to the solicitation and amendment numbers. FAILURE OF YOUR ACKNOWLEDGMENT TO BE RECEIVED AT THE PLACE DESIGNATED FOR THE RECEIPT OF OFFERS PRIOR TO THE HOUR AND DATA SPECIFIED MAY RESULT IN REJECTION OF YOUR OFFER. If by virtue of this amendment you desire to change an offer already submitted, such change may be made by telegram or letter, provided each telegram or letter makes reference to the solicitation and this amendment, and is received prior to the opening hour and data specified.

12. ACCOUNTING AND APPROPRIATION DATA *(If required)*

N/A

13. THIS ITEM APPLIES ONLY TO MODIFICATIONS OF CONTRACTS/ORDERS, IT MODIFIES THE CONTRACT/ORDER NO. AS DESCRIBED IN ITEM 14.

A. THIS CHANGE ORDER IS ISSUED PURSUANT TO: *(Specify authority)* THE CHANGES SET FORTH IN ITEM 14 ARE MADE IN THE CONTRACT ORDER NO. IN ITEM 10A.

B. THE ABOVE NUMBERED CONTRACT/ORDER IS MODIFIED TO REFLECT THE ADMINISTRATIVE CHANGES *(such as changes in paying office, appropriation date, etc.)* SET FORTH IN ITEM 14, PURSUANT TO THE AUTHORITY OF FAR 43.103(b).

C. THIS SUPPLEMENTAL AGREEMENT IS ENTERED INTO PURSUANT TO AUTHORITY OF:

D. OTHER Specify type of modification and authority)

E. **IMPORTANT:** Contractor ☐ **is not,** ☐ **is required** to sign this document and return ___ copies to the issuing office.

14. DESCRIPTION OF AMENDMENT/MODIFICATION *(Organized by UCF section headings, including solicitation/contract subject matter where feasible.)*

The solicitation is hereby revised as follows:

a) The hour and date of receipt of Bids IS extended to **April 27, 2012 at 2 p.m. local time (Eastern Daylight Time).**

Except at provided herein, all terms and conditions of the document referenced in Item 9A or 10A, as heretofore changed, remains unchanged and in full force and effect.

15A. NAME AND TITLE OF SIGNER *(Type or print)*		16A. NAME AND TITLE OF CONTRACTING OFFICER *(Type or print)*	
		AARON A. OLMSTED, CONTRACTING OFFICER	
15B. CONTRACTOR/OFFEROR	15C. DATE SIGNED	16B. UNITED STATES OF AMERICA BY	16C. DATE SIGNED
(Signature of person authorized to sign)		*(Signature of Contracting Officer)*	

b) Offerors must acknowledge receipt of this amendment prior to the hour and date specified above by one of the following methods:

1. By signing and returning one copy of the Standard Form 30;
2. By acknowledging receipt on each copy of the proposal submitted;
3. By separate letter or telegram which includes a reference to the solicitation and amendment number; or
4. By filling in Block Number nineteen (19) on the Standard Form 1442 of the solicitation.

c) Failure of the Offeror to acknowledge this amendment may be cause for rejection of the proposal.

COMPANY: _____

ADDRESS: _____

CITY: _____

STATE / ZIP: _____

Additional Questions

1. There are several scope discrepancies between the BID ISSUE document and the drawings.

   For Example:

   The Bid Issue document does not state to include media/drift eliminators for cooling tower #5. However, the drawings include this work and Addenda 5 confirms to include in the base price for Cooling Tower #5.

   The Bid Issue document does not state to include media/drift eliminators for cooling tower #6. However, the drawings include this work and Addenda 2 Question 67 states NOT to include in the price.

   Many other items (concrete repairs, power washing, structural repairs, etc.) also contain discrepancies between the BID ISSUE document and the drawings but have not been addressed via Addendum.

   • Please confirm that the only items to be in our bid are the items listed in the BID ISSUE Revision 04 document that was released in Amendment #3.

   REPLY:
   The Bid Summary Revision 04 is intended to be the schedule of work requested. These items are to be bid as per the Bid Form and as clarified per the Amendments.

2. Fill Depth- Please reference Dwg. COF14901 C-101 Sec. AA for CT #1. This section indicates a fill thickness of 2’-0” deep.

   Then reference the depths and quantities listed under note 6 on that same drawing, the notes specify both a 10 mil and a 15 mil thickness that may indicate two layers of 2’-0”. Then reference Spec 23 65 00 Page 7 1st paragraph, last sentence that specifies that there should be sufficient height to meet the performance specification. Upon review of the bid documents, we cannot find a performance specification.

   • What fill depths are required in the respective Towers?

REPLY:
The fill depth shall be full replacement which is 6'-0" feet, except for Cooling Tower No. 5, which is 4'-0".

See table below to aid in clarification of estimated fill media quantities.

3. The Bid Documents do not indicate the depth of the existing fill

• What fill depths exist now in the Towers? respective

Fill Media Quantities					
	Full Replacement				
	Total Length (ft)	Total Width (ft)	Area (sf)	10 mil (Ea.)	15 mil (Ea.)
Cooling Tower 1	192.0	45.0	8640.0	720.0	1440.0
Cooling Tower 3	159.0	63.0	10017.0	835.0	1670.0
Cooling Tower 6	252.0	66.0	16632.0	1386.0	2772.0
Cooling Tower 5	181.5	60.0	10890.0	908.0	908.0
			TOTAL =	**3849**	**6790**

ESTIMATED TOTALS 2012 Annual Shutdown CT 1 and CT 5	**1628**	**2348**

REPLY:
Existing depth of fill is approximately 6'-0" feet, except Cooling Tower No. 5 is 4'-0"

4. The specified fill manufacturer has indicated to us that they may not be able to provide sufficient quantities of fill due to long delivery times for a specific compound required to manufacture the product. Subject to review, we understand that only 65,000 CF can be available by 7-9-12

   • Can another manufacture be used?

   REPLY:
   In light of the material sourcing efforts, the biofilm reduction additive (i.e. Accu-Shield) portion of the specification can be omitted.

   The Contractor may provide approved alternate fill media per the salient features less the biofilm reduction additive as indicated in the drawings and specifications as required to met material sourcing issues for the scheduled outage period.

5. The answer to Addendum No. 2 Question 13, 4th paragraph, states that we bidders should provide a cost to replace the remaining 10 fan gear boxes at CT-1.

   • Would this price include material or will the required 8 additional be GFE and we provide a cost to install?

   • If so, there is no Option listed in the Bid Form to state this cost?

   REPLY:
   We are replacing only 8 gearboxes including plumbing the oil filtering lines and seeking 2 gearboxes as spares at CT 1. Bidders may ignore the statement about providing a cost for oil filtering piping at these remaining 10 fan locations per Addendum # 2 Question 13 paragraph 4.

6. The answer to Addendum No. 2 Question 28 begs the same question as #4 above.

REPLY:
See the reply to question No. 5 above as Addendum # 2 Question 13 and 28 pertain to the fan gearboxes.

7. The answer to Addendum No. 2 Question 29 does not answer the question asked.
   The Question is still:

   • Can the Bid Form be amended to include a Unit Price Tabulation

   REPLY:
   No. Bid according to the Bid Form.

8. The answer to Addendum No. 2 Question 41 still needs further clarification. The referenced drawing for CT-6 or specification do not specify that a door be replaced.

   • Can a schedule or specific list be provided, per CT to define the repair/ replacement work?

   REPLY:
   The bid summary was intended to be the schedule representing the repair / replacement work.

9. Specification 23 65 00 Cooling Towers was written to accommodate Phases I and II and lists work items to be performed.

   • Can some definition be provided as to what was / is being performed in Phase I?

   REPLY:
   The response to Addendum # 2 Question 61 indicates the work awarded previously which was a portion of the total scope under Phase 1.

   • We suspect Tower 1 Item 10 and Tower 3 Item 7 were intended to be in Phase I. Please confirm.

   REPLY:
   Confirmed that they were part of the Phase 1 and 2 design efforts and should not have been listed in the specification section. These referenced items are not part of this solicitation.

   • Please define Tower 5, Item 6 Extend Partition Walls

   REPLY:
   Believe the reference is for Cooling Tower 6 and not Cooling Tower 5.

   Extension of the partition walls shall include the following: additional 3'-0" feet of wall height over the entire width of the cooling tower, in this case CT 6, from existing elevation of wall to approximately 12" below the basin water level. There are six (6) partition walls in CT 6.

10. Regarding the schedule at Plum Brook; From what we have read in the documents and RFI's, it appears the new work at Plum Brook could begin June/July, but the connection of this new work into the existing network would need to be in September/October (between testing program occurring in August and beginning again in November. Is this accurate?

    REPLY:
    Construction can begin as soon as the Contractor is ready however the connections to the existing network will need to be coordinated with Plum Brook's testing schedule. This could be in September/October or during another break in schedule.

11. Item 58 of the Q&A of addendum #2 states the contract period of performance is September 30, 2013. Is this correct? If yes, why is this so far out? Also, what is the anticipated Notice to Proceed?

    REPLY:

The period of performance is through September 30, 2013 to incorporate the possibility that not all work will be completed during the 2012 shutdown. Scope and budgetary restraints could possibly shift option work to the 2013 shutdown. If that were to occur an equitable adjustment could be negotiated if necessary. NASA prefers all work to be completed during the 2012 shutdown.

The notice to proceed will be issued after SBA has confirmed apparent awardee is an 8(a) firm and contractor has submitted requisite insurance and HASP documents.

12. Fill Depth
It is unclear the fill quantities that are being asked to replace. Per drawing C-101 Section A-A for cooling tower #1 it shows for a 2 feet fill depth. However, the quantities listed on drawing C-101: Note 6, state that for 6 cells (24'-2-3/4" X 45'-1") that (540) pieces of 10 mil, CF 1900MA and (1080) pieces of 15 mil, CF 1900MA are required. Each piece of fill is 24" x 24" x 72", which has a square footage of 12 sf. The square footage for each cell is 1080 sf. The equation below states how this calculates.

Cooling Tower #1

Overall cell square footage
24' x 45' = 1080 sf/cell
1080 sf x 6 cells = 6480 sf

10 mil
540 pcs x 12 sf = 6480 sf
6480 sf (fill) / 6480 sf (cell) = 1 layer fill

15 mil
1080 pcs x 12 sf = 12,960 sf
12,960 sf (fill) / 6480 sf (cell) = 2 layers fill

Fill Depth
2 layer (10 mil) + 1 layer (15 mil) = 3 layers fill

3 layers x 2' fill depth = 6 feet Fill Depth

Based upon the quantities provided in C-101: Note 6, there is a discrepancy between that and the 2' fill depth per Section A-A drawing C-101. Please advise what the correct fill depth is being asked to replace. This applies to all other cooling towers that are requesting new fill material.

REPLY:
The fill depth shall be full replacement which is 6'-0" feet, except for Cooling Tower No. 5, which is 4'-0".

See reference drawings CE-191121 (CT 3) and CF-182154 (CT5) as examples of existing fill media installation.

13. General Items
In the scope of work for Cooling Towers 1, 3, 6 and 5 it states to repair various items which include (decking and supports, walkways, partition wall, shear connections, stairs, and hatches). There is no defined quantity or detail for these items. In order to put a price to these items it is necessary for there to be some information to quantify off of. Please provide some sort of information on these items so that all contractors can bid the same quantity of work.

REPLY:
Repair items are called out on the plans.

Below are quantities specific to each cooling tower:
CTW1
Interior wood handrail = 450 ft (2x4)
Interior wood doors = 9 each
Partition walls = 9600 sq. ft. (2x6)

CTW 3

Shear connections = 2 each

CTW 5

None in this solicitation

CTW 6

Exterior wood door = 1 each

14. Cooling Tower #1 Handrail
It is requested to provide a new exterior handrail on cooling tower #1. Drawing GI-102 it gives a detail named "TYPICAL OSHA GUARDRAIL" which states that the material is 1.5" schedule 40 aluminum. In specification section 23 65 00 subpart 2.5.12 it specifies wood handrails. Please advise on which material is being requested for the new handrail around cooling tower #1. If wood is the material requested then please advise how to tie into the tower (splice location).

REPLY:
For this application at CT 1, aluminum as per the detail provided is to be supplied.

15. Cooling Tower #4 Handrail
It is in the scope of work to remove, rehabilitate and reinstall the FRP handrails on Cooling Tower #4. It is assumed that these handrail posts spliced into the structural columns. The exterior casing is assumed to be attached to the structural columns and handrail posts. When removing handrail posts for rehabilitation it will require casing to be removed, which will cause damage to the casing. Please provide the splice location between the structural column and handrail posts in order to quantify how much casing to replace.

REPLY:
Rehabilitate and reinstall the FRP handrails, the posts shall remain in place.

See existing reference drawings (CC-179205, CC-179208) of the original construction.

16. Drift Eliminator Supports
In specification section 23 65 00 subpart 2.5.2 it states that "Tee sections shall be suspended with ¼ inch brass rods connected to stainless steel clips embedded in the bottom side of the roof deck at the time of casting. Eliminators may be supported by brass or stainless steel suspension rods from the fan deck or supported directly on concrete beams." Please advise if this is in the scope of work for drift eliminator replacement and is so please provide detail.

REPLY:
The drift eliminators shall be installed on the existing supports.
Supports that are damaged shall be replaced.

See the reference drawings CE-191113 (CT 3) and CF-182151 (CT 5) as examples of existing drift eliminator installation.

17. Concrete Basins –
CE0070;COF14901;GI101: CT#6 has Key Note #2 – Repair Basin walls and pressure wash…..; This is not listed for CT#3. On S101 Drawing for CT#3 – the General Notes #4 – Pressure wash the basin walls….. Please Confirm if we are to include pressure washing and epoxy coating of basin walls on CT#3, if so where would this be included on the bid schedule form? Also, there isn't a line item on the bid schedule form for CT# 6 to Pressure Wash, Cleaning & Epoxy Coating to Basin…should this be included in CT#6 too?

REPLY:
We are not seeking, as part of this solicitation, basin scope as reflected in the drawings for CT 3 and CT 6.

18. The note referring to "Provide for 30% of the wood framing that supports the fill media" not all the towers will have all media replaced. Do we only replace 30% of the wood framing in the areas that will receive new media?

REPLY:
The note pertains to areas that are to receive new fill media, drift eliminators, and dri-seal.

19. I have talked to a number of lumber yards and I am told that most redwood is clear and not all is clear and redwood can't be pressure treated. They say it may be available in California but the need to drill holes into the material so the treatment can penetrate the Redwood under pressure. How should we proceed with this item?

    REPLY:
    Per specification 23 65 00, Section 2.4.1.4 Redwood clear of all hearts which is considered general purpose, finest architectural grade, free of defects on one face per RIS. If redwood materials are supplied, they shall comply with the specification.

    Per specification 23 65 00, Section 2.5.10 Douglas Fir can also be used.

    Per our research, redwood can be pressure treated. Therefore, the contractor shall follow the pressure treated lumber specification (23 65 00 – Section 2.4.1.3) and also the wood material specifications for redwood (CTI STD-103) or Douglas fir (CTI ESG-114).
20. Addendum #2, Item 67: Please provide a section, details, location and dimensions on the partition walls you wish to extend?

    REPLY:
    See Question #9

21. On the bid form, Cooling Tower #6 has 5 Options, Drawing #CE0126-COF14901-S101 indicates Basin Repairs to Wall & Slab along with cleaning and sealing (note #3) under which option do we put this cost?

    REPLY:
    See Question #17

22. Cooling Tower #6, Option 3 on the bid form calls for Repair Top Decking, Deck Supports, Internal Walkways, Stairs, Hatches and Doors of the Cooling Tower, Drawing #CE0126 COF14901-S-101 indicates only with Key Note #2 Repair Handrail in One Location on the Interior of the Tower. Please clarify what we are to included in our pricing.

    REPLY:
    See Question # 13

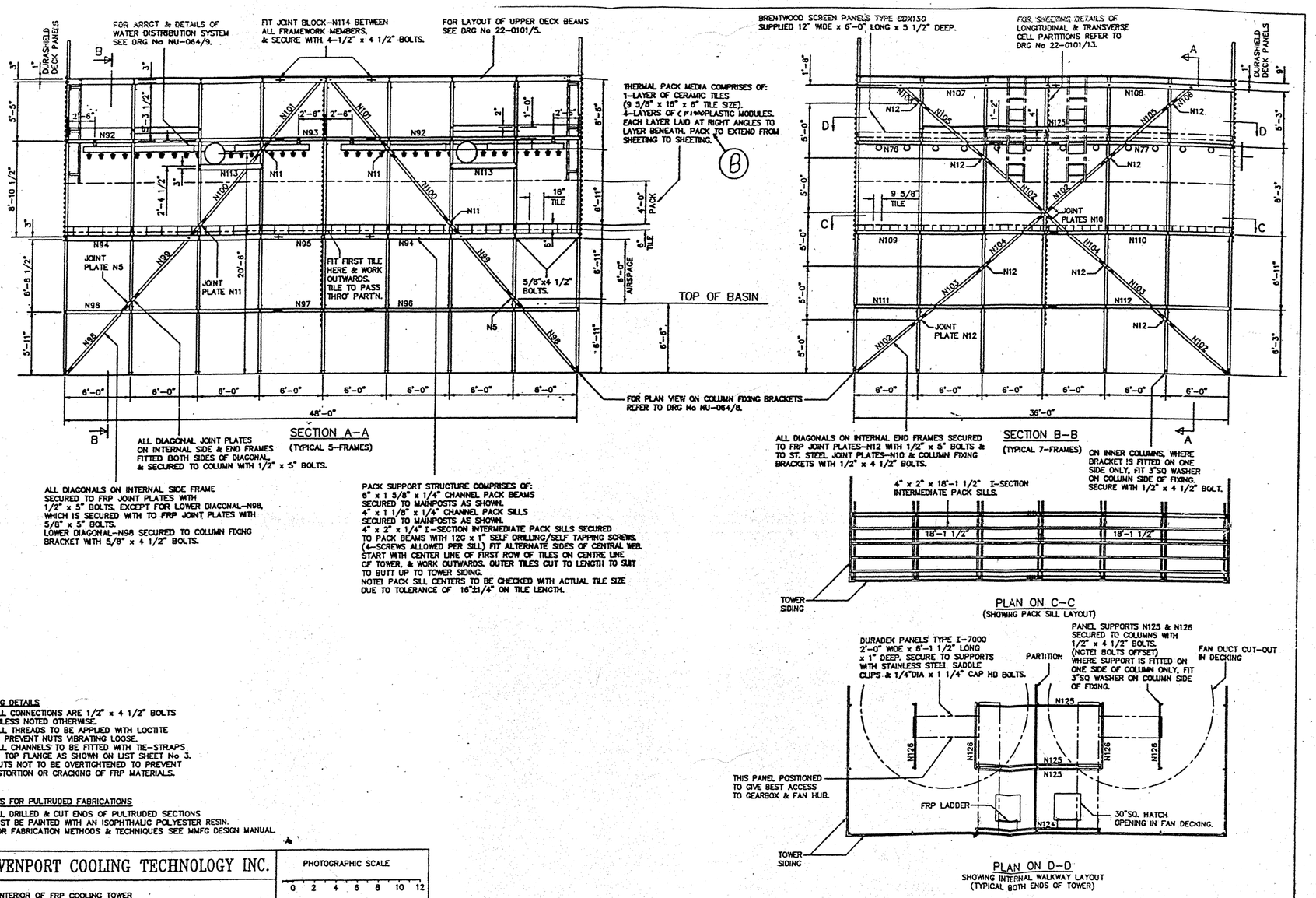

PLAN ON C-C
(SHOWING PACK SILL LAYOUT)

PLAN ON D-D
SHOWING INTERNAL WALKWAY LAYOUT
(TYPICAL BOTH ENDS OF TOWER)

FIXING DETAILS
1. ALL CONNECTIONS ARE 1/2" x 4 1/2" BOLTS UNLESS NOTED OTHERWISE.
2. ALL THREADS TO BE APPLIED WITH LOCTITE TO PREVENT NUTS VIBRATING LOOSE.
3. ALL CHANNELS TO BE FITTED WITH TIE-STRAPS TO TOP FLANGE AS SHOWN ON LIST SHEET No 3.
4. NUTS NOT TO BE OVERTIGHTENED TO PREVENT DISTORTION OR CRACKING OF FRP MATERIALS.

NOTES FOR PULTRUDED FABRICATIONS
1. ALL DRILLED & CUT ENDS OF PULTRUDED SECTIONS MUST BE PAINTED WITH AN ISOPHTHALIC POLYESTER RESIN.
2. FOR FABRICATION METHODS & TECHNIQUES SEE MMFG DESIGN MANUAL.

DAVENPORT COOLING TECHNOLOGY INC.				PHOTOGRAPHIC SCALE 0 2 4 6 8 10 12		
TITLE INTERIOR OF FRP COOLING TOWER MODEL NO. 2.2EFF1824-4-19						
CUSTOMER NASA - LEWIS RESEARCH CENTER, CLEVELAND, OHIO.				A	PLATFORM SUPPORT DETAILS REVISED.	5-MAR 95	P.H.
DRAWN BY P.H.	SCALE	DATE 13/ 1/95		B	Fill changed from OF 19 to CF 1	7-25-96	S.B.
APPROVED BY	DRG.No NU-064/2						

SYM.	NO.	DESCRIPTION	APP./DATE
		REVISIONS	

DESIGN CONTRACTOR	UNLESS OTHERWISE SPECIFIED .X DIM. MAY VARY ± .XX DIM. MAY VARY ± .XXX DIM. MAY VARY ± ANGULAR DIM. MAY VARY ± .....DIM. MAY VARY ± BREAK SHARP EDGES		
	DR.	CK.	D. SUP.
	DES. J.M.P	D. ENG.	D.P. ENG. B.A.B.
APPROVED	D.S. HD. JFL	D.B. CH.	D. DIV. JAW
C. O. R.	R. ENG.	R.S. HD.	R. DIV.

NASA LEWIS RESEARCH CENTER CLEVELAND, OHIO 44135

COOLING TOWER#4--STRUCTURE#82

INTERIOR OF FRP COOLING TOWER

SCALE

REFERENCE

CC 179205

OFFICIAL DATE 11-4-97

534373

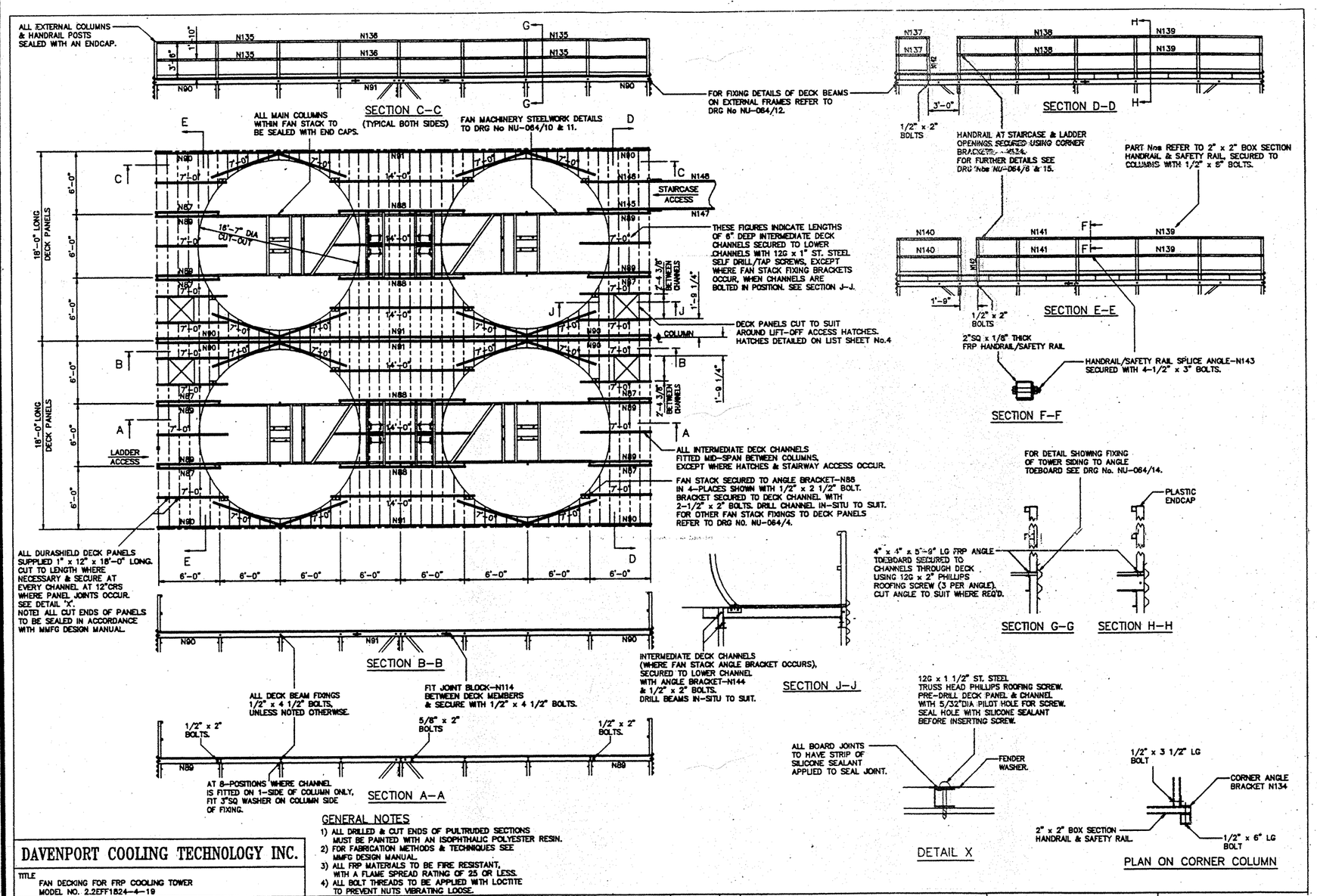

GENERAL NOTES

1) ALL DRILLED & CUT ENDS OF PULTRUDED SECTIONS MUST BE PAINTED WITH AN ISOPHTHALIC POLYESTER RESIN.
2) FOR FABRICATION METHODS & TECHNIQUES SEE MMFG DESIGN MANUAL.
3) ALL FRP MATERIALS TO BE FIRE RESISTANT, WITH A FLAME SPREAD RATING OF 25 OR LESS.
4) ALL BOLT THREADS TO BE APPLIED WITH LOCTITE TO PREVENT NUTS VIBRATING LOOSE.

DAVENPORT COOLING TECHNOLOGY INC.

TITLE
FAN DECKING FOR FRP COOLING TOWER
MODEL NO. 2.2EFF1824-4-18

CUSTOMER NASA – LEWIS RESEARCH CENTER, CLEVELAND, OHIO.

DRAWN BY P.H.	SCALE	DATE 7/ 2/95	REV
APPROVED BY	DRG.No NU-064/5		C

A	NOTE ADDED REGARDING HANDRAIL FIXING AT STAIRWAY & LADDER ACCESS OPENINGS.	27 MAR 95	P.H.	C	OPENING IN DECK FOR FAN STACK WAS 16'-2" DIA	12-5-95	P.H.
B	NOTE ADDED TO FIT 3"SQ WASHERS AT 8–POSITIONS.	28 APR 95	P.H.				

PHOTOGRAPHIC SCALE
0 2 4 6 8 10 12

SYM.	NO.	DESCRIPTION	APP./DATE
		REVISIONS	

DESIGN CONTRACTOR	UNLESS OTHERWISE SPECIFIED .X DIM. MAY VARY ± .XX DIM. MAY VARY ± .XXX DIM. MAY VARY ± ANGULAR DIM. MAY VARY ± .....DIM. MAY VARY ± BREAK SHARP EDGES.....		
	DR.	CK.	D. SUP.
	DES. J.M.P	D. ENG.	D.P. ENG. B. A. B.
APPROVED	D.S. HD. JFL	D.B. CH.	D. SIV. JAW
C. O. R.	R. ENG.	R.S. HD.	R. DIV.

NASA LEWIS RESEARCH CENTER CLEVELAND, OHIO 44135

COOLING TOWER#4--STRUCTURE#82

FAN DECKING FOR FRP C.T.

SCALE

REFERENCE

CC 179208

OFFICIAL DATE 11-4-97

554373

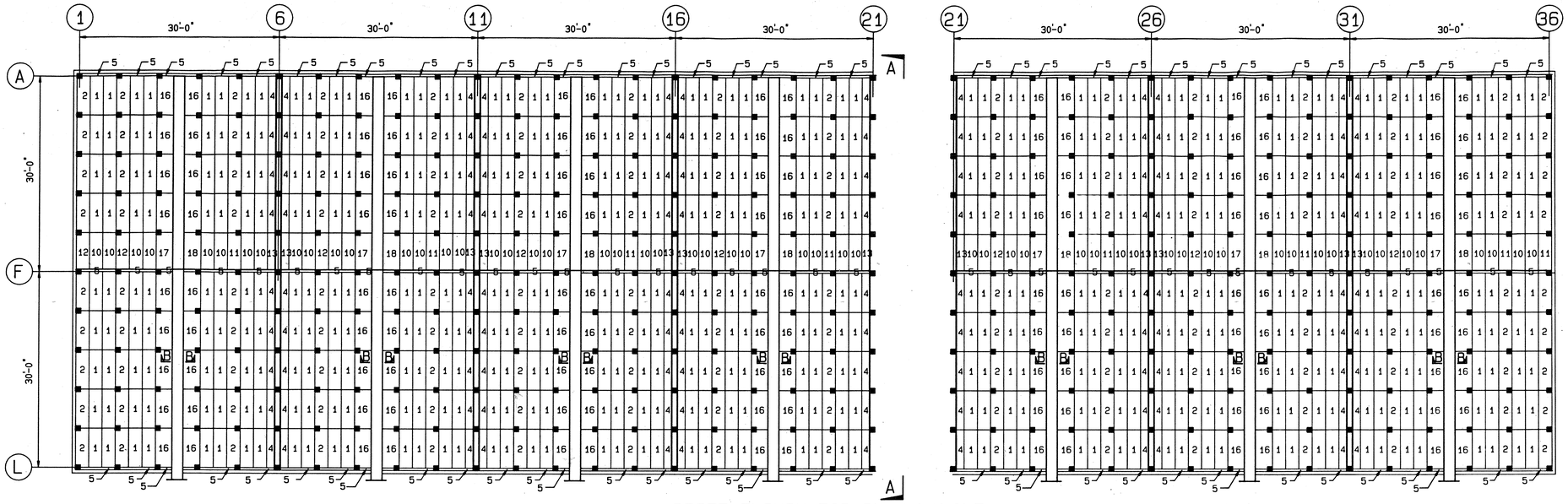

BOTH THIS REPORT AND THE INFORMATION IN IT ARE PROPRIETARY TO CUSTODIS-COTTRELL INC. THE INFORMATION, AND NOT BY ANY MEANS FOR THE DESIGN, CONSTRUCTION, INSTALLATION OR OPERATION OF APPARATUS OR PROCESSES WHICH COMPETE WITH CUSTODIS-COTTRELL INC.

DRIFT ELIMINATOR PLAN LAYOUT

DRIFT PANEL QUANTITY TABLE CT-422-100

PANEL TYPE	PART NO.	LENGTH	NO. OF WAVES	WIDTH	DEPTH	A NO. OF WAVES TO BE CUT	DIM. B	C NO. OF WAVES TO BE CUT	DIM. D	NO. REQ'D
1	594-7001-289	6'-0"	14	2'-0 11/16"	7 7/8"	-----	-----	-----	-----	288
2	594-7002-289	6'-0"	14	2'-0 11/16"	7 7/8"	3	1 7/8"	3	1 7/8"	81
4	594-7004-289	6'-0"	11	1'-7 7/16"	7 7/8"	-----	-----	-----	-----	63
5	594-7005-289	6'-0"	1	0'-1 11/16"	7 7/8"	-----	-----	-----	-----	60
10	594-7010-289	5'-9 1/2"	14	2'-0 11/16"	7 7/8"	-----	-----	-----	-----	32
11	594-7011-289	5'-9 1/2"	14	2'-0 11/16"	7 7/8"	-----	-----	3	1 7/8"	4
12	594-7012-289	5'-9 1/2"	14	2'-0 11/16"	7 7/8"	3	1 7/8"	-----	-----	5
13	594-7013-289	5'-9 1/2"	11	1'-7 7/16"	7 7/8"	-----	-----	-----	-----	7
16	594-7016-289	6'-0"	17	2'-5 3/4"	7 7/8"	3	1 7/8"	3	1 7/8"	72
17	594-7017-289	5'-9 1/2"	17	2'-5 3/4"	7 7/8"	3	1 7/8"	-----	-----	4
18	594-7018-289	5'-9 1/2"	17	2'-5 3/4"	7 7/8"	-----	-----	3	1 7/8"	4

DRIFT PANEL QUANTITY TABLE CT-422-100

PANEL TYPE	PART NO.	LENGTH	NO. OF WAVES	WIDTH	DEPTH	A NO. OF WAVES TO BE CUT	DIM. B	C NO. OF WAVES TO BE CUT	DIM. D	NO. REQ'D
1	594-7001-289	6'-0"	14	2'-0 11/16"	7 7/8"	-----	-----	-----	-----	216
2	594-7002-289	6'-0"	14	2'-0 11/16"	7 7/8"	3	1 7/8"	3	1 7/8"	63
4	594-7004-289	6'-0"	11	1'-7 7/16"	7 7/8"	-----	-----	-----	-----	45
5	594-7005-289	6'-0"	1	0'-1 11/16"	7 7/8"	-----	-----	-----	-----	45
10	594-7010-289	5'-9 1/2"	14	2'-0 11/16"	7 7/8"	-----	-----	-----	-----	24
11	594-7011-289	5'-9 1/2"	14	2'-0 11/16"	7 7/8"	-----	-----	3	1 7/8"	4
12	594-7012-289	5'-9 1/2"	14	2'-0 11/16"	7 7/8"	3	1 7/8"	-----	-----	3
13	594-7013-289	5'-9 1/2"	11	1'-7 7/16"	7 7/8"	-----	-----	-----	-----	5
16	594-7016-289	6'-0"	17	2'-5 3/4"	7 7/8"	3	1 7/8"	3	1 7/8"	54
17	594-7017-289	5'-9 1/2"	17	2'-5 3/4"	7 7/8"	3	1 7/8"	-----	-----	3
18	594-7018-289	5'-9 1/2"	17	2'-5 3/4"	7 7/8"	-----	-----	3	1 7/8"	3

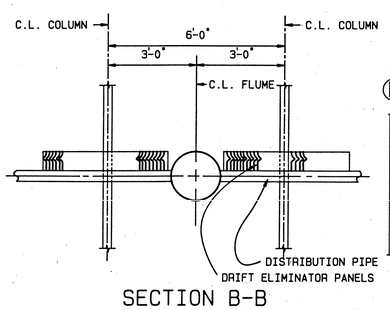

SECTION B-B

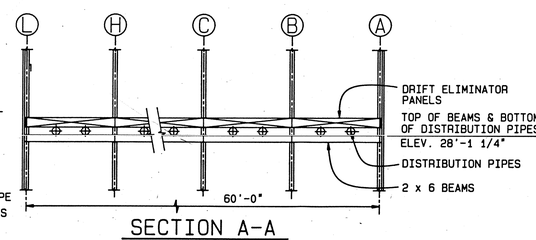

SECTION A-A

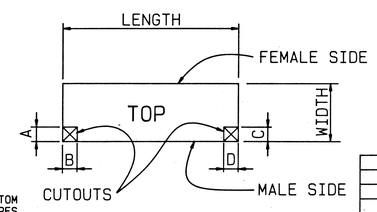

PLAN VIEW OF DRIFT ELIMINATOR PANELS

NOTES

1. DRIFT ELIMINATORS, ORIGIN AND DESIGNATION:
   DRIFT ELIMINATOR ASSEMBLIES (PVC).
   TYPE A
   DRIFT SPACING 43.54 MM (45MM)
2. PANEL LENGTH TOLERANCE SHALL BE +0" -1/4".
3. CUTS FOR DIAGONAL MEMBERS TO BE DONE IN FIELD.
4. FIELD CUT FLOATING WAVES.

NO	REVISION	DATE	BY	CHK	DES

DRN	R R	DATE 9/11/85
DES	V S	DATE 10/11/85
CHK	S. G.	DATE 10-11-85
APP		DATE

CUSTODIS-COTTRELL INC.
BOX 1500 SOMERVILLE, NJ 08876
A RESEARCH-COTTRELL COMPANY

CFF TOWER
MODEL # 14-3030-20100-5515-A204

DRIFT ELIMINATOR PLAN LAYOUT

SCALE: NONE | CT-422-100

NASA-34753

SYM.	NO.	DESCRIPTION	APP./DATE
		REVISIONS	

DESIGN CONTRACTOR

UNLESS OTHERWISE SPECIFIED
.X DIM. MAY VARY ±
.XX DIM. MAY VARY ±
.XXX DIM. MAY VARY ±
ANGULAR DIM. MAY VARY ±
.....DIM. MAY VARY ±
BREAK SHARP EDGES .....

DR.	CK.	D. SUP.
DES.	D. ENG.	D.P. ENG.
D.S. HD.	D.B. DIV.	D. DIV.
R. ENG.	R.S. HD.	R. DIV.

APPROVED
C. O. R.

NASA LEWIS RESEARCH CENTER CLEVELAND, OHIO 44135

REPLACEMENT of COOLING TOWER No. 5

DRIFT ELIMINATOR PLAN LAYOUT

SCALE
REFERENCE

CF 182151
STRUCTURAL
OFFICIAL DATE 5/13/88

BOTH THIS PRINT AND THE INFORMATION ON IT ARE CONFIDENTIAL, AND THE PROPERTY OF CUSTODIS-COTTRELL INCORPORATED, AND MAY NOT BE USED FOR THE DESIGN, FABRICATION, INSTALLATION OR OPERATION OF APPARATUS OR PROCESSES EXCEPT UNDER CONTRACT WITH IT.

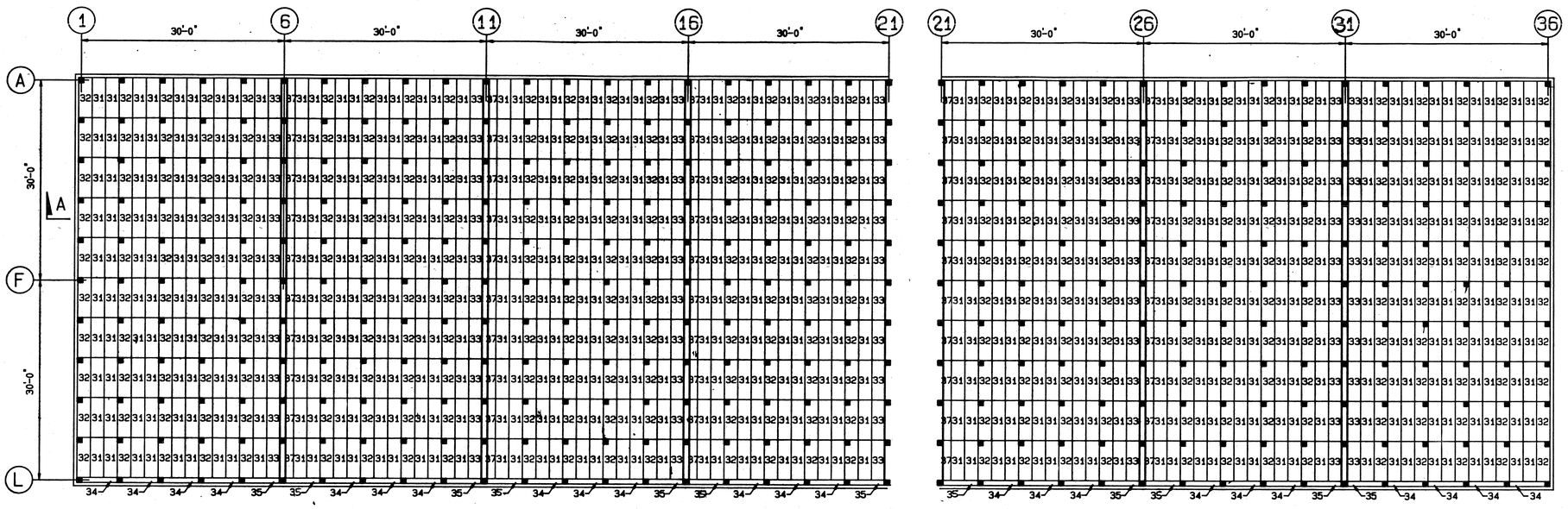

TIER I FILLING PLAN

FILL PANEL QUANTITY TABLE DRAWING CT-422-120

PANEL TYPE	PART NO.	LENGTH	WIDTH	DEPTH	DIM. A	DIM. B	DIM. C	DIM. D	NO. REQ'D
31	610-7018-289	6'-0"	2'-0"	1'-0"	-----	-----	-----	-----	360
32	610-7018-289	6'-0"	2'-0"	1'-0"	3 5/8"	3 5/8"	-----	-----	170
33	610-7018-289	6'-0"	1'-11 1/4"	1'-0"	-----	-----	-----	-----	40
34	610-7019-289	5'-8 1/2"	0'-3 1/2"	1'-0"	-----	-----	-----	-----	13
35	610-7019-289	5'-7 3/4"	0'-3 1/2"	1'-0"	-----	-----	-----	-----	7
37	610-7018-289	6'-0"	1'-7 3/4"	1'-0"	-----	-----	-----	-----	30

FILL PANEL QUANTITY TABLE DRAWING CT-422-120

PANEL TYPE	PART NO.	LENGTH	WIDTH	DEPTH	DIM. A	DIM. B	DIM. C	DIM. D	NO. REQ'D
31	610-7018-289	6'-0"	2'-0"	1'-0"	-----	-----	-----	-----	270
32	610-7018-289	6'-0"	2'-0"	1'-0"	3 5/8"	3 5/8"	-----	-----	130
33	610-7018-289	6'-0"	1'-11 1/4"	1'-0"	-----	-----	-----	-----	30
34	610-7019-289	5'-8 1/2"	0'-3 1/2"	1'-0"	-----	-----	-----	-----	10
35	610-7019-289	5'-7 3/4"	0'-3 1/2"	1'-0"	-----	-----	-----	-----	5
37	610-7018-289	6'-0"	1'-7 3/4"	1'-0"	-----	-----	-----	-----	20

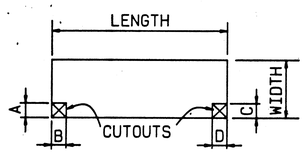

PLAN VIEW OF FILL PANELS

NOTES:

1. FILL ORIGIN AND DESIGNATION:
   MUNTERS PLASdek FILL NO. 19060
   THICKNESS 8 MILS
2. ALL VOIDS TO BE PACKED WITH FILL IF POSSIBLE.
3. CUTS FOR DIAGONAL MEMBERS TO BE DONE IN THE FIELD.

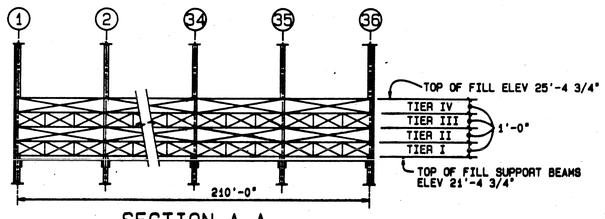

SECTION A-A

NO	REVISION	DATE	BY	CHK	DES

DRN R R	DATE 3/28/88
DES V.S.	DATE 9/14/88
CHK S.G.	DATE 9-14-88
APP TOM	DATE 9-20-88

CUSTODIS-COTTRELL INC.
BOX 1500 SOMERVILLE, NJ 08876
A RESEARCH-COTTRELL COMPANY

CFF TOWER
MODEL # 14-3030-20100-5515-A204

FILL PLAN TIER I

SCALE: NONE CT-422-120

850358
NAS3-24733

NO.	DESCRIPTION	APP./DATE
	REVISIONS	

DESIGN CONTRACTOR

UNLESS OTHERWISE SPECIFIED
.X DIM. MAY VARY ±
.XX DIM. MAY VARY ±
.XXX DIM. MAY VARY ±
ANGULAR DIM. MAY VARY ±
.....DIM. MAY VARY ±
BREAK SHARP EDGES.....

DR.	CK.	D. SUP.
DES.	D. ENG.	D.P. ENG.
D.S. HD.	D.B. CH.	D. DIV.
R. ENG.	R.S. HD.	R. DIV.

APPROVED
C. O. R.

NASA LEWIS RESEARCH CENTER CLEVELAND, OHIO 44135

REPLACEMENT of COOLING TOWER No. 5

FILL PLAN TIER I

SCALE
REFERENCE

CF 182154
STRUCTURAL
OFFICIAL DATE 5/13/88

BR-15022B16

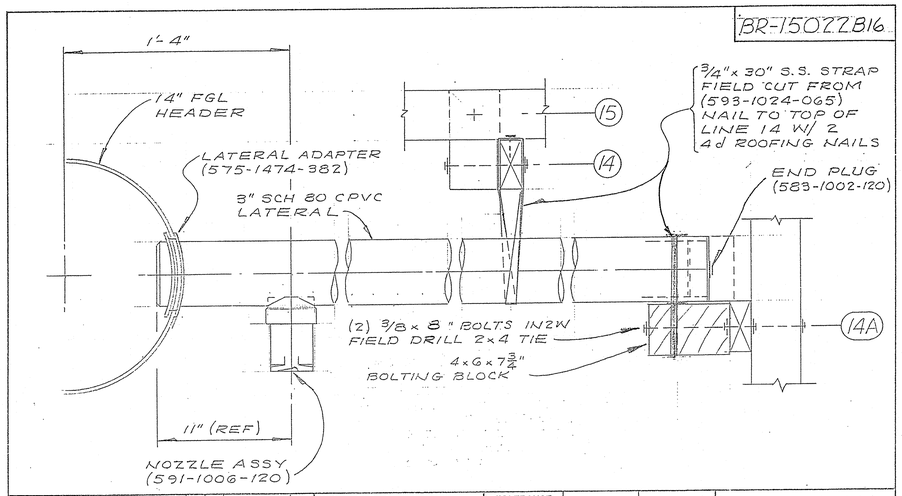

REV	REVISION	DR	CH	APPD DRAFT	APPD ENGR	DATE

Custodis-Ecodyne
Maintenance Services
A Research-Cottrell Constructed Products Group Company
P.O. Box 1267 Santa Rosa California 95402
707/544-5833 Telex 34750

TOLERANCE: UNLESS OTHERWISE NOTED ALL DIM'S ARE

DRAFT APPD / DATE	ENGR APPD / DATE
DR 5/17/88 HGSLEY	MECH
CH 5/19/88 J.RIVERA	STRUCT
APPD 05/23/88 SDJ	PROD
SCALE NONE	JOB NO. X00-15022-B

LATERAL INSTALLATION

DWG NO. BR-15022B16 REV

82-00-456 AP

BR-15022B17

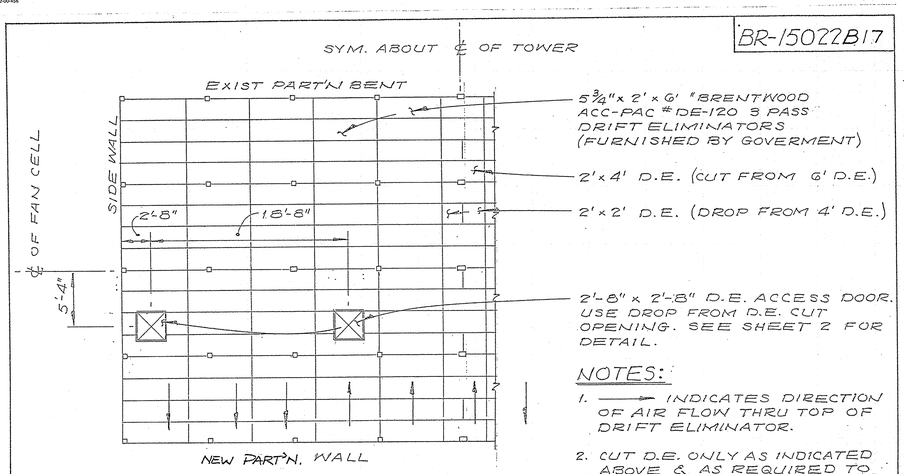

NOTES:

1. ⟶ INDICATES DIRECTION OF AIR FLOW THRU TOP OF DRIFT ELIMINATOR.
2. CUT D.E. ONLY AS INDICATED ABOVE & AS REQUIRED TO SUIT STUCTURAL MEMBERS.

REV	REVISION	DR	CH	APPD DRAFT	APPD ENGR	DATE

Custodis-Ecodyne
Maintenance Services
A Research-Cottrell Constructed Products Group Company
P.O. Box 1267 Santa Rosa California 95402
707/544-5833 Telex 34750

TOLERANCE: UNLESS OTHERWISE NOTED ALL DIM'S ARE

DRAFT APPD / DATE	ENGR APPD / DATE
DR 5/17/88 HGSLEY	MECH
CH 5/19/88 J.RIVERA	STRUCT
APPD 05/23/88 SDJ	PROD
SCALE NONE	JOB NO. X00-15022-B

DRIFT ELIM. PLAN

DWG NO. SHEET 1 OF 2 BR-15022B17 REV

82-00-456 AP

BR-15022B17

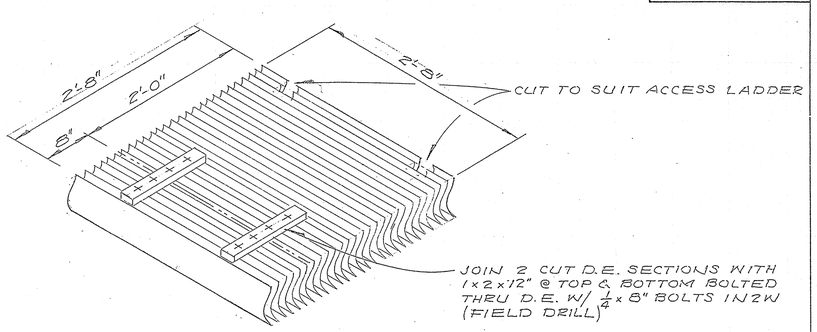

SHEET 2 OF 2

REV	REVISION	DR	CH	APPD DRAFT	APPD ENGR	DATE

Custodis-Ecodyne
Maintenance Services
A Research-Cottrell Constructed Products Group Company
P.O. Box 1267 Santa Rosa California 95402
707/544-5833 Telex 34750

TOLERANCE: UNLESS OTHERWISE NOTED ALL DIM'S ARE

DRAFT APPD / DATE	ENGR APPD / DATE
DR 5/17/88 HGSLEY	MECH
CH 5/19/88 J.RIVERA	STRUCT
APPD 05/23/88 SDJ	PROD
SCALE NONE	JOB NO. X00-15022-B

DRIFT ELIM. ACCESS DOOR

DWG NO. BR-15022B17 REV

82-00-456 AP

BR-15022B18

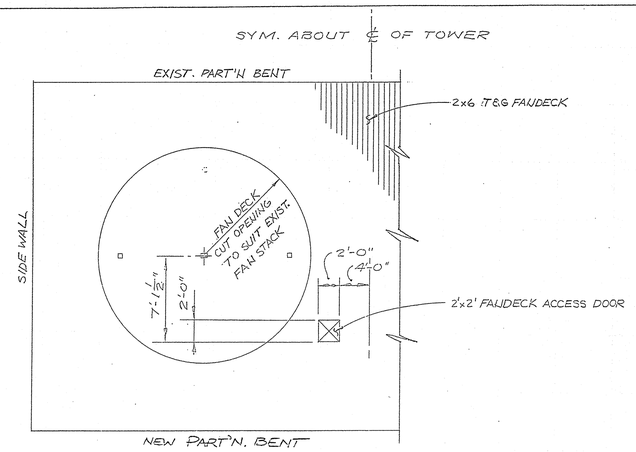

REV	REVISION	DR	CH	APPD DRAFT	APPD ENGR	DATE

Custodis-Ecodyne
Maintenance Services
A Research-Cottrell Constructed Products Group Company
P.O. Box 1267 Santa Rosa California 95402
707/544-5833 Telex 34750

TOLERANCE: UNLESS OTHERWISE NOTED ALL DIM'S ARE

DRAFT APPD / DATE	ENGR APPD / DATE
DR 5/17/88 HGSLEY	MECH
CH 5/19/88 J.RIVERA	STRUCT
APPD 05/23/88 SDJ	PROD
SCALE NONE	JOB NO. X00-15022-B

PLAN @ FANDECK

DWG NO. BR-15022B18 REV

82-00-456 AP

BR-15022B19

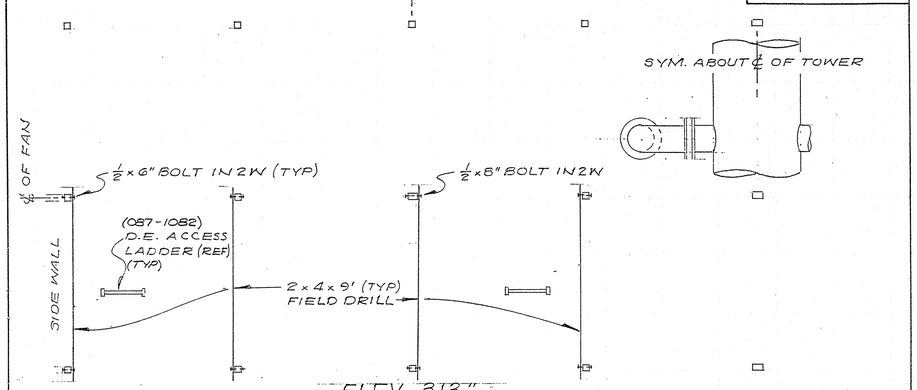

ELEV. 313."
D.E. ACCESS LADDER
BOTTOM JOIST SUP'T

SHEET 1 OF 13

REV	REVISION	DR	CH	APPD DRAFT	APPD ENGR	DATE
A	Changed 2x8's to 2x9's & changed to double rail to fit under coil	MH	KVS	RCK		8/24/88
B	Added 2x4's per rail & changed to double rail to fit under coil	JR	KVS	RCK		8/24/88

Custodis-Ecodyne
Maintenance Services
A Research-Cottrell Constructed Products Group Company
P.O. Box 1267 Santa Rosa California 95402
707/544-5833 Telex 34750

TOLERANCE: UNLESS OTHERWISE NOTED ALL DIM'S ARE

DRAFT APPD / DATE	ENGR APPD / DATE
DR 5/19/88 J.RIVERA	MECH
CH 5/19/88 HGSLEY	STRUCT
APPD 05/23/88 SDJ	PROD
SCALE 3/8" = 1'-0"	JOB NO. X00-15022-B

PLAN
PLENUM WALKWAY

DWG NO. BR-15022B19 REV B

82-00-456

BR-15022B19

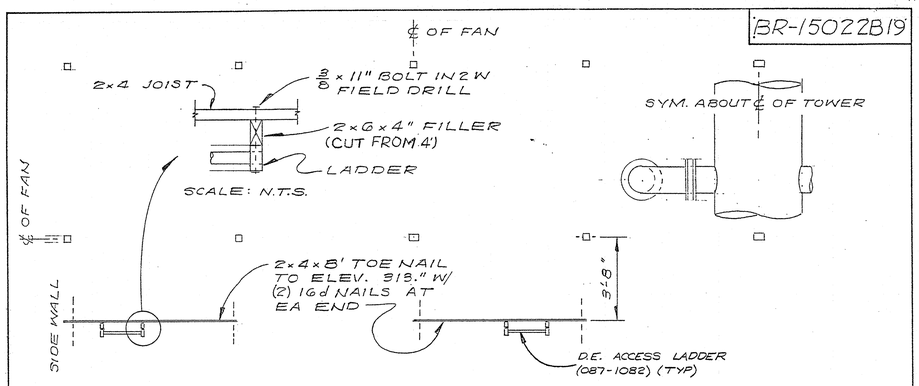

ELEV. 316.5"
D.E. ACCESS LADDER
BOTTOM JOIST

SCALE: 3/8" = 1'-0"

SHEET 2 OF 13

REV	REVISION	DR	CH	APPD DRAFT	APPD ENGR	DATE

Custodis-Ecodyne
Maintenance Services
A Research-Cottrell Constructed Products Group Company
P.O. Box 1267 Santa Rosa California 95402
707/544-5833 Telex 34750

TOLERANCE: UNLESS OTHERWISE NOTED ALL DIM'S ARE

DRAFT APPD / DATE	ENGR APPD / DATE
DR 5/19/88 J.RIVERA	MECH
CH 5/19/88 HGSLEY	STRUCT
APPD 05/23/88 SDJ	PROD
SCALE 1/8 INDICATED	JOB NO. X00-15022-B

PLAN
PLENUM WALKWAY

DWG NO. BR-15022B19 REV B

82-00-456

CONTRACT NAS3-00145	CHG	ZONE	DESCRIPTION	APP/DATE
CONTRACTOR Analex CLEVELAND, OHIO	REVISIONS			
TASK ORDER 041	NATIONAL AERONAUTICS AND SPACE ADMINISTRATION JOHN H. GLENN RESEARCH CENTER LEWIS FIELD CLEVELAND, OHIO			
APPROVED TFM	BUILDING 70 PSL COOLING TOWER NO.3			
GLENN RESEARCH CENTER				
DR. / CHK.				
DES.BR.CH. / DES.ENG. / DES.P.ENG. BAB	PLENUM WALKWAY, FAN DECK & DRIFT ELIM.			
FAC./SYS.MGR. / ENG.BR.CH. / ENG.DIV.CH. JFL	SIZE CE	DRAWING NUMBER 191113	REV	BLDG 70 / AREA
RES.ENG. / RES.BR.CH. / RES.DIV.CH.				UNITS ENGLISH
FACILITY/SYSTEM	SCALE	OFFICIAL DATE 5/19/01	SHEET 1 OF 1	DISCIPLINE MECHANICAL

DRAWING NUMBER 191113 SIZE CE REV A

NOM. PIPE SIZE	HEADER SUPPORT
6" THRU 10"	4x4 (074-0279)
12" THRU 24"	4x6 (074-0280)
27"	4x8 (074-1113)

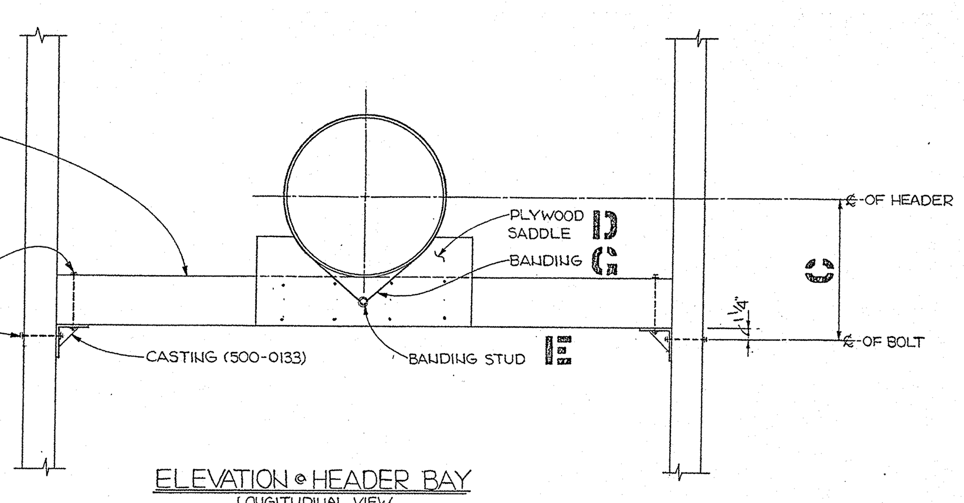

ELEVATION @ HEADER BAY
LONGITUDINAL VIEW

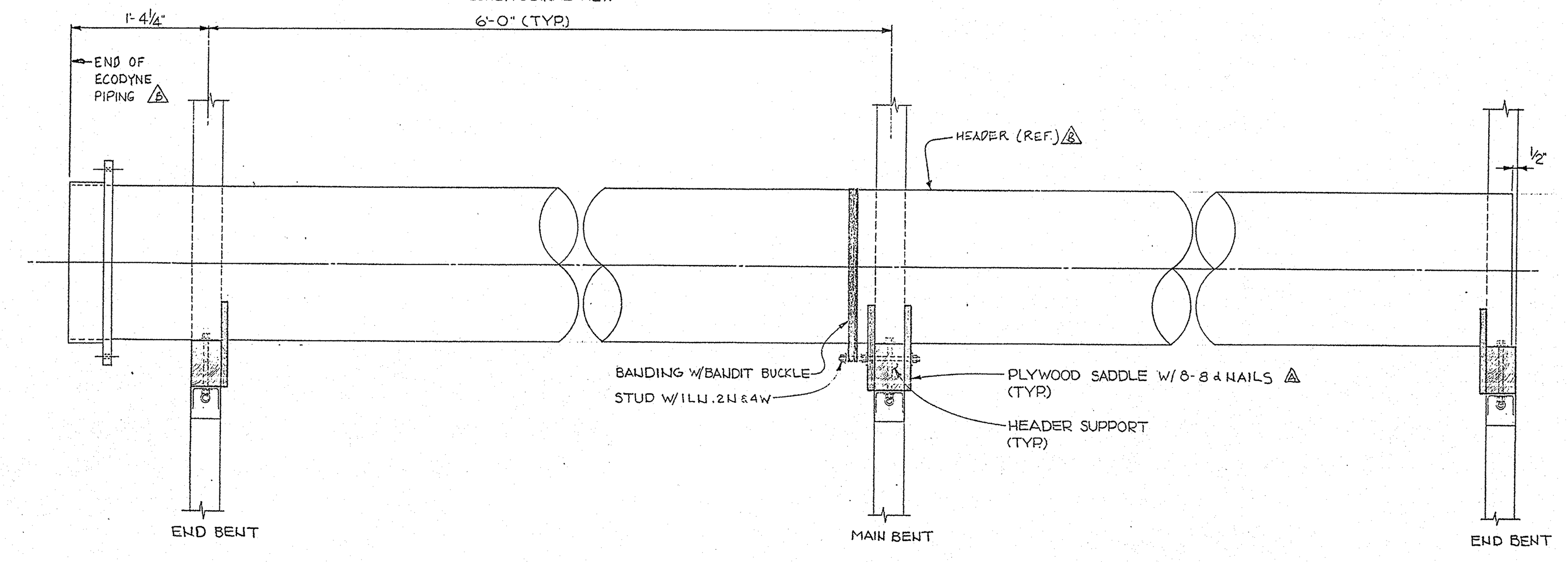

ELEVATION @ HEADER

PIPE INSTALLATION SCHEDULE		C	D	G		E
NOMINAL PIPE DIA.	PIPE TYPE	HEADER DOWN	3/4" PLYWD. SADDLE	BANDING LENGTH	BANDING SIZE	STUD SIZE
6"	SCH.40	8 1/16"	(074-1192)	3'0"	1/2" STRAP (593-0113) BANDIT BUCKLE (593-0114)	3/8" x 9" (529-0392) *
8"		9 1/16"	(074-1235)	3'6"		
10"		10 1/8"	(074-1195)	4'0"		
12"		1'1 1/8"	(074-1236)	4'6"		
12"	SDR-35	1'1"	(074-1243)	4'6"		
15"		1'2 7/16"	(074-1206)	5'0"	1" STRAP (593-1109) BANDIT BUCKLE (593-1110)	1/2" x 10" (529-0037) *
18"		1'4 1/8"	(074-1237)	6'0"		
21"		1'5 13/16"	(074-1200)	7'0"		
24"		1'7 3/16"	(074-1238)	7'6"		
27"		1'10 1/2"	(074-1239)	8'6"		

* STUDS REQUIRE 1 LOCK NUT, 2 NUTS, AND 4 WASHERS.

REV	REVISION	DR	CH	APPD DRAFT	APPD ENGR	DATE
A	RELOCATED 8-8d NAILS	J.R.		WM		5/8/88
B	ADDED "END OF ECODYNE PIPING" & "HEADER (REF.)"	LP		WM		9-7-88

Custodis-Ecodyne
Maintenance Services
A Research-Cottrell Constructed Products Group Company
P.O. Box 1267 Santa Rosa California 95402
707/544-5833 Telex 34750

TOLERANCE UNLESS OTHERWISE NOTED ALL DIM'S ARE
DR 4/4/88 J.RIVERA
CH 4/21/88 NED.
APPD 04/21/88 SDW
SCALE N.T.S.
JOB NO. STD.

HEADER INSTALLATION SCHEDULE 40 AND SDR 35 PIPE
DWG NO. D-08855 REV B
AP

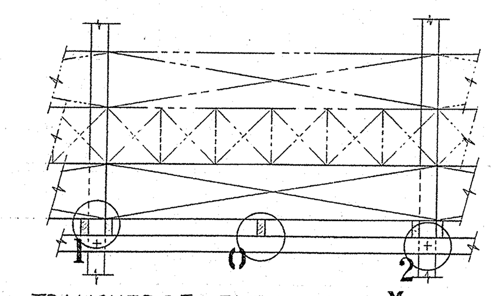

TRANSVERSE ELEVATION X
(2x4 JOIST, CTR BAY SUPPORT & JOIST SUPPORT)

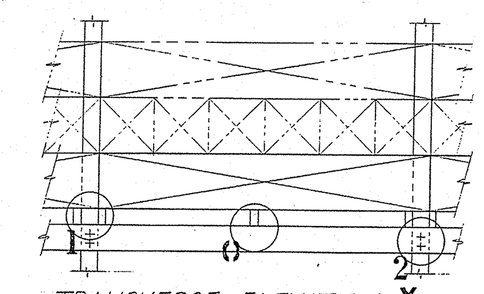

TRANSVERSE ELEVATION Y
(2x4 JOIST, CTR BAY SUPPORT & 2x6 JOIST SUPPORT)

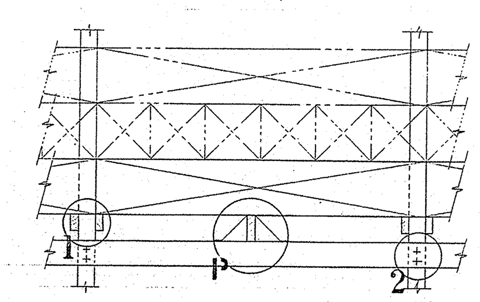

TRANSVERSE ELEVATION Z
(2x6 JOIST, 2x6 CTR BAY SUPPORT & JOIST SUPPORT)

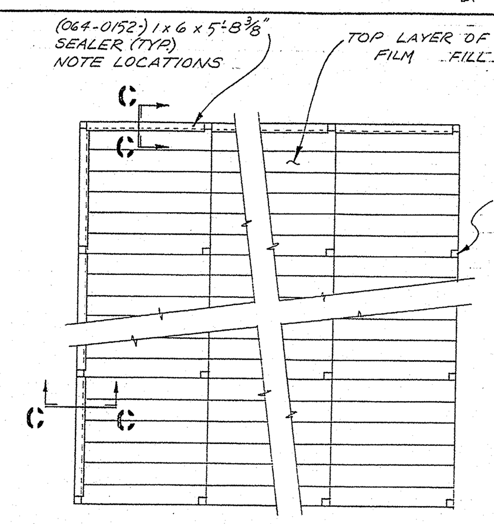

DETAIL A
PLAN OF FILM FILL

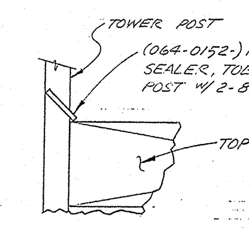

SECTION C C

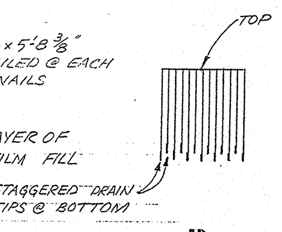

DETAIL B

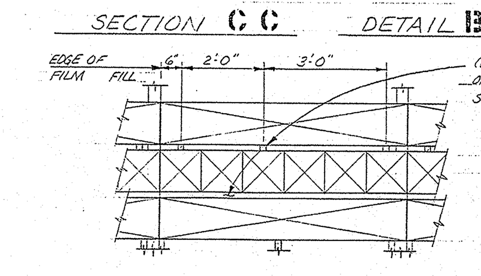

SPACER DETAIL
(IF REQUIRED)

TABLE 1

ROW NO	TEMP	LAYERS	TYPE OF FILL	TYPE OF LUMBER	TRANS ELEV	JOIST DET'L #1 CONT	JOIST DET'L #1 LAPS	JOIST SUP'T DET'L #2 CONT	JOIST SUP'T DET'L #2 LAPS
1		1	12060	FIR	X	D	E	J	I
2				RWD	X	D	E	J	I
3			19060	FIR	X	D	E	J	I
4				RWD	X	D	E	J	I
5			25060	FIR	X	D	E	H	G
6				RWD	X	D	E	J	G
7		2	12060	FIR	X	D	E	J	I
8				RWD	Y	D	E	K	L
9			19060	FIR	X	D	E	J	I
10				RWD*	X	D	E	J	I
11			25060	FIR	X	D	E	J	G
12				RWD	X	D	E	J	G
13	105 DEGREES MAXIMUM	3	12060	FIR	Y	D	E	K	L
14				RWD	Y	D	E	K	L
15			19060	FIR	X	D	E	J	I
16				RWD	Y	D	E	K	L
17			25060	FIR	X	D	E	J	I
18				RWD*	X	D	E	J	I
19		4	12060	FIR	Z	F	E	K	L
20				RWD	Z	F	E	K	L
21			19060	FIR*	X	D	E	J	I
22				RWD	Y	D	E	K	L
23			25060	FIR*	X	D	E	J	I
24				RWD	Y	D	E	K	L
25		5	12060	FIR	Z	H	G	M	L
26				RWD	Z	H	G	M	L
27			19060	FIR	Y	F	E	K	L
28				RWD*	Y	F	E	K	L
29			25060	FIR*	X	D	E	J	I
30				RWD	Y	D	E	K	L
31		6	12060	FIR	INSTALL SEPARATE SUP'T SYSTEMS FOR EACH 5' OF FILL				
32				RWD					
33			19060	FIR	Z	H	G	K	L
34				RWD	Z	H	E	K	L
35			25060	FIR*	Y	F	E	K	L
36				RWD*	Y	F	E	K	L
37		1	12060	FIR	X	D	E	J	I
38				RWD	X	D	E	J	I
39			19060	FIR	X	D	E	J	I
40				RWD	X	D	E	J	I
41			25060	FIR	X	D	E	H	G
42				RWD	X	D	E	J	G
43		2	12060	FIR	X	D	E	J	I
44				RWD	Y	D	E	K	L
45			19060	FIR	X	D	E	J	I
46				RWD*	X	D	E	J	I
47			25060	FIR	X	D	E	J	G
48				RWD	X	D	E	J	I
49	120 DEGREES MAXIMUM	3	12060	FIR*	Y	F	E	K	L
50				RWD*	Y	F	E	K	L
51			19060	FIR	X	D	E	J	I
52				RWD	Y	D	E	K	L
53			25060	FIR	X	D	E	J	I
54				RWD*	X	D	E	J	I
55		4	12060	FIR	Z	H	G	M	L
56				RWD	Z	H	G	M	L
57			19060	FIR*	X	F	E	J	I
58				RWD*	Y	D	E	K	L
59			25060	FIR*	X	D	E	J	I
60				RWD	Y	D	E	K	L
61		5	12060	FIR*	Z	J	I	M	L
62				RWD*	Z	J	I	M	L
63			19060	FIR	Z	H	G	M	L
64				RWD	Z	H	E	K	L
65			25060	FIR*	Y	H	E	K	L
66				RWD*	Y	F	E	K	L
67		6	12060	FIR	INSTALL SEPARATE SUP'T SYSTEMS FOR EACH 5' OF FILL				
68				RWD					
69			19060	FIR	Z	J	I	N	L
70				RWD	Z	J	G	N	L
71			25060	FIR	Z	H	G	K	L
72				RWD	Z	H	G	K	L

NOTES

1. TOWER POSTS ARE AT 6' CENTERS.
2. MAXIMUM INLET TEMPERATURE IS 120 DEGREES.
3. EXISTING STRUCTURAL TIES ARE NOT TO BE USED AS PART OF THE FILL SUPPORT STRUCTURE.
4. ALL FILL JOIST SUPPORTS AND FILL JOISTS AT BENT LINES ARE SINGLE AT END BENTS AND DOUBLE AT MAIN BENTS.
5. INSTALL FILM FILL PER DETAIL "A".
6. FIELD CUT FILM FILL AT POSTS AND BRACES AS REQUIRED.
7. INSTALL FILM FILL WITH STAGGERED DRAIN TIPS DOWN (SEE DETAIL "B").
8. SUBSEQUENT LAYERS OF FILM FILL IS HORIZONTALLY ROTATED 90 DEGREES FROM PREVIOUS LAYER.
9. INSTALL SEALERS AT PERIMETER POSTS PER DETAIL "A" & SECTION "C-C".
10. START JOIST & JOIST SUPPORTS LINES WITH THE LONGEST MEMBERS.
11. LAP ONLY WITH 6'3 1/2" MEMBERS.
12. SEE TABLE 1 FOR DETAILS TO BE USED.
13. SEE PARTS LIST FOR "ROW NO." (TABLE 1) TO BE USED.
14. TYPE OF LUMBER FOLLOWED BY "" IN TABLE 1 INDICATES 7' MAXIMUM LENGTH FOR MID-BAY JOIST.

Custodis-Ecodyne
Maintenance Services
A Research-Cottrell Constructed Products Group Company
P.O. Box 1267 Santa Rosa California 95402
707/544-5833 Telex 34750

TOLERANCE UNLESS OTHERWISE NOTED ALL DIM'S ARE
DR PEEK 10/21/85
CH MARK 10-28-85
APPD 10/29/85
SCALE 3/8",1",1½"=1'-0"
JOB NO. STD.

FILM FILL INSTALLATION & DETAILS, 6'-0" BAYS, 8 & 10 MIL ONLY 120° MAX. WATER TEMP.
DWG NO. DR-01134 SHEET 1 OF 2 REV E

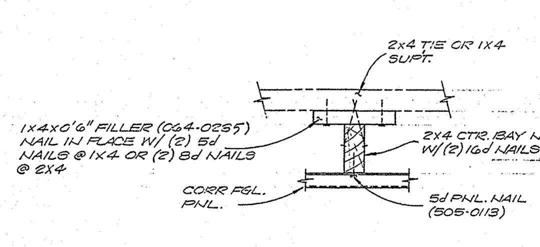

CENTER BAY NAILER DET.

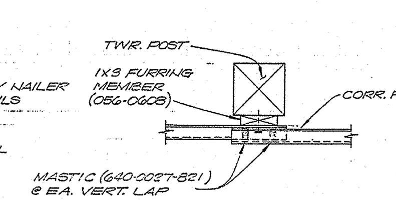

TYPICAL PNL. JOINT

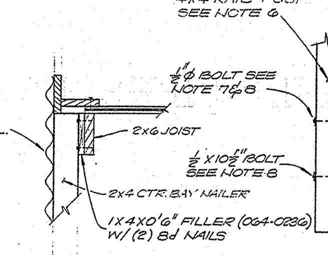

CTR. BAY NAILER AT FANDECK

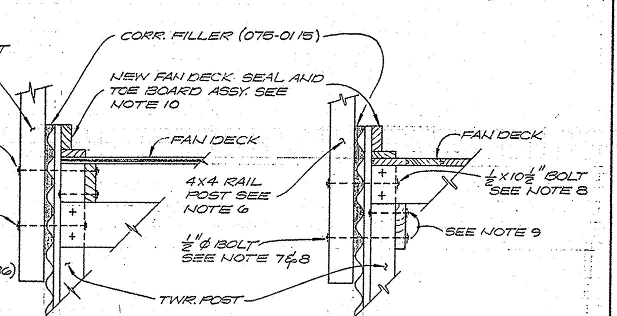

MAIN BENT END WALL — MAIN BENT SIDE WALL
DETAILS AT TOP PNL. W/4x4 RAIL POSTS

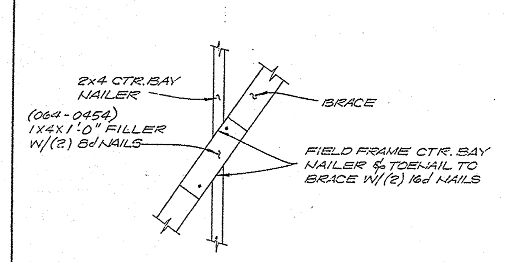

DETAIL AT BRACE CTR. BAY NAILER

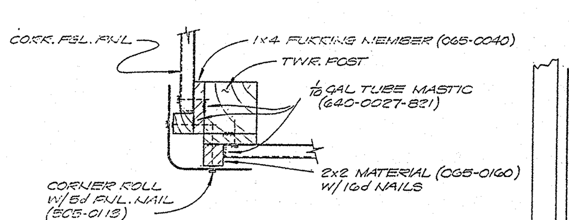

DETAIL AT CORNER ABOVE LVRS.

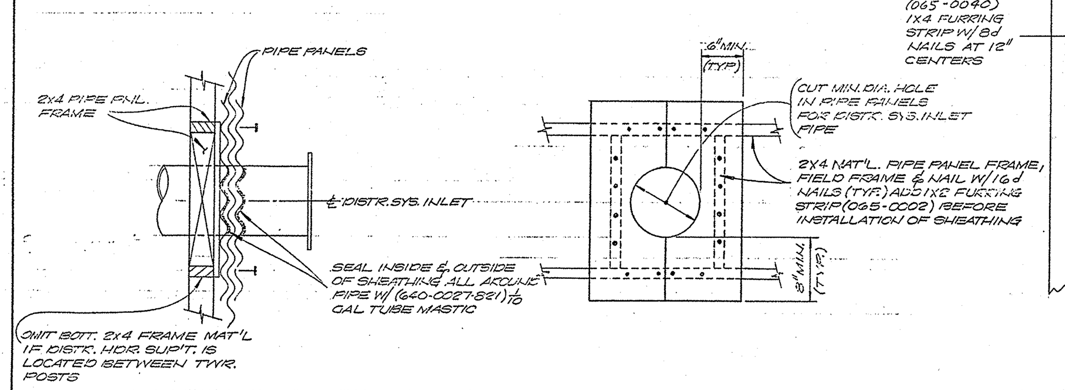

DISTRIBUTING SYSTEM INLET PIPE PANEL DETAIL

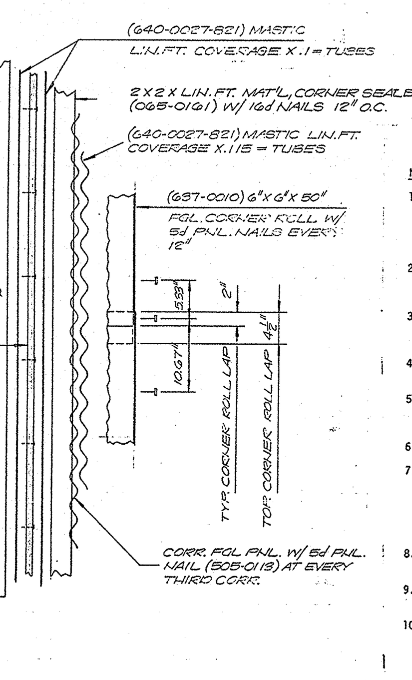

CORNER POST SHEATHING ELEVATION

NOTES:

1. FIBERGLASS PANELS ARE TO BE INSTALLED ONE COMPLETE HORIZONTAL ROW AT A TIME. EACH PANEL IS TO BE NAILED AT TOP AND BOTTOM FIRST THEN NAILED AT INTERMEDIATE LOCATIONS. EVERY 3RD ROW OF PANELS IS TO BE ALIGNED HORIZONTALLY. (SUGGEST USE OF CALK LINE). OMIT MASTIC AT HORIZONTAL PANEL LAPS.
2. PANELS ARE TO BE NAILED AT EVERY VALLEY AT PANEL LAPS AND EVERY THIRD VALLEY AT ALL OTHER INTERMEDIATE POSTS AND CENTER BAY NAILERS.
3. TO INSURE A GOOD SEAL, NAILS AT HORIZONTAL JOINTS ARE TO BE SLANTED DOWNWARD AT APPROX. 30° ALL OTHER PANEL NAILS ARE TO BE PERPENDICULAR TO PANEL.
4. PANELS ARE TO BE INSTALLED COMMENCING AT THE TOP OF THE TOWER AND WORKING DOWN.
5. INSTALL CORNER ROLL COMMENCING FLUSH WITH TOP OF SHEATHING. TOP CORNER ROLL LAP APPROX. 4½" ALL OTHER LAPS 2" CENTERED ON FGL CROWN.
6. RAIL POSTS ARE TO EXTEND 3'-8.25" ABOVE TOP OF FRAMING.
7. 4x4 RAIL POST BOLTS THRU JOIST OR JOIST SUP.

   1/2 x 12" BOLT AT SGL JOIST OR JOIST SUP
   1/2 x 13" BOLT AT DBL JOIST OR JOIST SUP
   1/2 x 15" BOLT AT SGL JOIST SUP W/4x8 M&G SUP BOLT DOWN BLOCK
8. USE 1" SHORTER BOLTS IF EXISTING 3x4 BINDING CLEATS EXTENDED FOR RAIL POSTS ARE REUSED.
9. RAIL POST BOLTS THRU JOIST SUP. USE TOP HOLE IN LIEU OF BOTTOM ON SOME TOWERS.
10. NEW FAN DECK SEAL AND TOE BOARD ASSY.

    2x4 AND 1x4 MATL. NAILED TOGETHER W/8d NAILS AT 12" CTRS AND NAILED TO FAN DECK SNUG TO NEW SHEATHING W/8d AT 12" CTRS.

ECODYNE Ecodyne Cooling Products Division
P.O. Box 1267 Santa Rosa, California 95403 (707) 544-5833

TOLERANCE UNLESS OTHERWISE NOTED ALL DIM'S ARE
DR DEC.10.83 MCWILLIAMS
CH PEEK 1/1/84
APPD 1-19-84 P.CULL
SCALE 1/2",1½"=1'-0"
JOB NO. STANDARD

SHEATHING DETAILS W/ FURRING STRIPS & CORR. FIBERGLASS PANELS
DWG NO. DR-01097 R

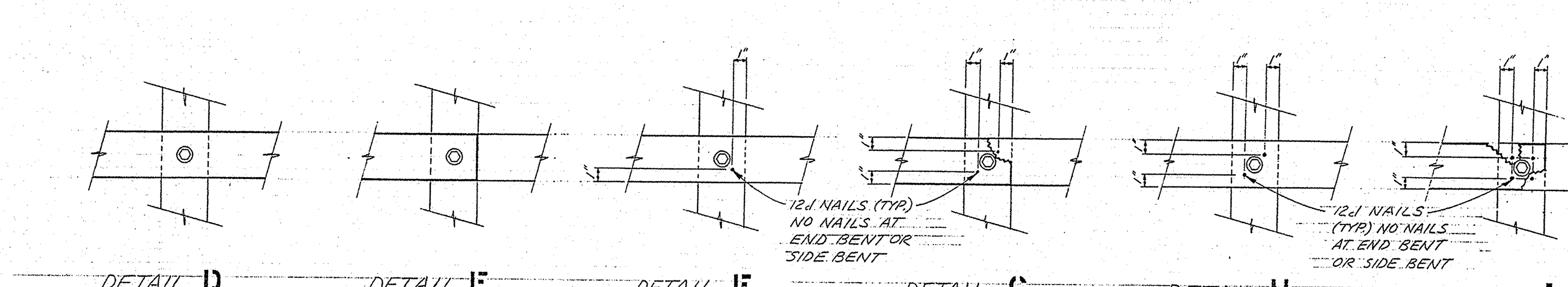

DETAIL D (CONTINUOUS) — DETAIL E (LAP) — DETAIL F (CONTINUOUS) — DETAIL G (LAP) — DETAIL H (CONTINUOUS) — DETAIL I (LAP)

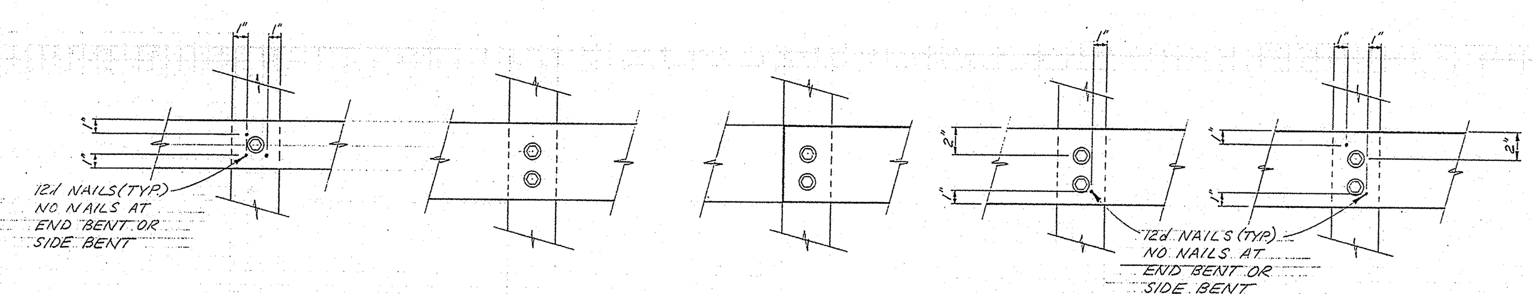

DETAIL J (CONTINUOUS) — DETAIL K (CONTINUOUS) — DETAIL L (LAP) — DETAIL M (CONTINUOUS) — DETAIL N (CONTINUOUS)

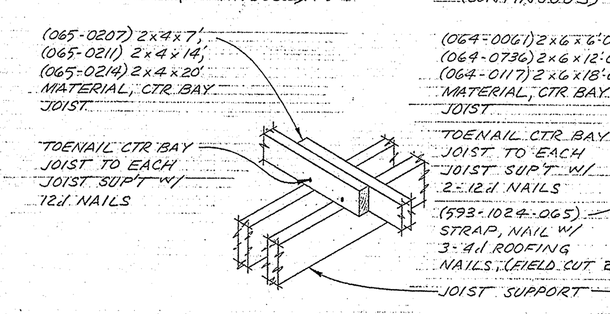

DETAIL O

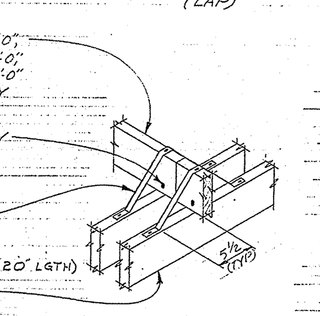

DETAIL P

BOLTING TABLE	
1-2x[]	½x6" BOLT @ END BENT/NEW SHEATHING ½x5" LAG @ END BENT/EXIST. SHEATHING
2-2x[]	½x7½" BOLT @ MAIN BENT & END BENT/NEW SHEATH. ½x6½ LAG @ END BENT/EXIST. SHEATHING
4-2x[]	½x11" BOLT @ MAIN BENT

BOLTED MEMBERS
(072-0401) 2x4x6'-3½"
(072-0402) 2x4x12'-3½"
(072-0403) 2x4x18'-3½"
(073-1035) 2x6x6'-3½"
(073-1036) 2x6x12'-3½"
(073-1031) 2x6x18'-3½"

REV	REVISION	DR	CH	APPD DRAFT	APPD ENGR	DATE
C	REDRAWN PER ENG. CALC. SHEETS 11/5/85	PEEK		P.A.		11/21/85
D	CORRECTED DWG. DETAIL "J" WAS "G", "P" WAS "H"	PEEK	TMK	P.C.J.		1/7/86
E	FILM WAS MUNTERS	ES	LEE	PEEK		9/14/88

Custodis-Ecodyne
Maintenance Services
A Research-Cottrell Constructed Products Group Company
P.O. Box 1267 Santa Rosa California 95402
707/544-5833 Telex 34750

TOLERANCE UNLESS OTHERWISE NOTED ALL DIM'S ARE
DR PEEK 10/21/85
CH MARK 10-28-85
APPD 10-29-85
SCALE 3/8",1",1½"=1'-0"
JOB NO. STD

FILM FILL INSTALLATION & DETAILS, 6'-0" BAY 8 & 10 MIL ONLY 120° MAX. WATER TEMP.
DWG NO. DR-01134 SHEET 2 OF 2 REV E

CHG	ZONE	DESCRIPTION	APP/DATE
		REVISIONS	

CONTRACT NAS3-00145
CONTRACTOR Analex CLEVELAND, OHIO
TASK ORDER 041
APPROVED TFm
GLENN RESEARCH CENTER

DR.	CHK.	
DES.BR.CH.	DES.ENG.	DES.P.ENG. BAB
FAC./SYS.MGR.	ENG.BR.CH.	ENG.DIV.CH. JFL
RES.ENG.	RES.BR.CH.	RES.DIV.CH.

FACILITY/ SYSTEM

NATIONAL AERONAUTICS AND SPACE ADMINISTRATION
JOHN H. GLENN RESEARCH CENTER
LEWIS FIELD
CLEVELAND, OHIO

BUILDING 70
PSL COOLING TOWER NO.3

HEADER, SHEATHING AND FILM FILL INSTALLATION DRAWINGS

SIZE	DRAWING NUMBER	REV	BLDG	AREA
CE	191121		70	
			UNITS ENGLISH	
SCALE	OFFICIAL DATE 9/19/01	SHEET 1 OF 1	DISCIPLINE MECHANICAL	

SIZE CE DRAWING NUMBER 191121 REV