NOTICE - WHEN GOVERNMENT DRAWINGS, SPECIFICATIONS OR OTHER DATA ARE USED FOR ANY PURPOSE OTHER THAN IN CONNECTION WITH A DEFINITELY RELATED GOVERNMENT PROCUREMENT OPERATION, THE UNITED STATES GOVERNMENT THEREBY INCURS NO RESPONSIBILITY NOR ANY OBLIGATION WHATSOEVER AND THE FACT THAT THE GOVERNMENT MAY HAVE FORMULATED, FURNISHED, OR IN ANY WAY SUPPLIED THE SAID DRAWINGS, SPECIFICATIONS OR OTHER DATA IS NOT TO BE REGARDED BY IMPLICATION OR OTHERWISE AS IN ANY MANNER LICENSING THE HOLDER OR ANY OTHER PERSON OR CORPORATION, OR CONVEYING ANY RIGHTS OR PERMISSION TO MANUFACTURE, USE, OR SELL ANY PATENTED INVENTION THAT MAY IN ANY WAY BE RELATED THERETO

APPLICATION	
NEXT ASSY	USED ON

REVISION HISTORY					
PART NO.	ZONE	REV	DESCRIPTION	DATE	APPROVAL

6000 PSIG Pressure Vessel Procurement Specification
January 20, 2012
(Rev 1)

UNLESS OTHERWISE SPECIFIED DIMENSIONS ARE IN INCHES. INTERPRET DIMENSIONS AND TOLERANCES PER ASME Y14.5M-1994. TOLERANCES NO:

FRACTIONS DECIMALS ANGLES

THIRD ANGLE PROJECTION

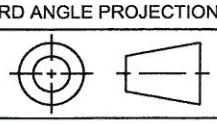

EXPORT CONTROL DETERMINATION: (1) 620FPC00001 – Procurement Specification, 6600 PSIG Pressure Vessel, Spacecraft Processing Element, GHe System			AECD#: 11865	Stamp Revision: 10/24/2008
	Yes	No	SBU Reviewer's Signature	Date
Document contains SBU?	☐	☒	Heather White	1/21/2011

EAR 99 NLR	☒ EAR 99, NLR	The information contained in the document is technical in content, but is not technical data as defined by the ITAR or the EAR, and therefore is EAR 99 NLR (no export license required). [General Prohibition Six (Embargo) applies to all items subject to the EAR, i.e. items on the CCL and within EAR 99 NLR. You may not make an export or re-export contrary to the provisions of part 746 (Embargos and Other Special Controls) of the EAR and 22 CFR part 126.1 of the ITAR.]

CAD MAINTAINED. CHANGES SHALL BE INCORPORATED ONLY BY THE DESIGN ACTIVITY

SOFTWARE

FILENAME SPE_GHe_Vessel

MATERIAL

HEAT TREATMENT

FINAL PROTECTIVE FINISH

ORIGINAL DATE OF DRAWING (YY/MM/DD) 12/01/20

DRAFTSMAN	CHECKER
ENGINEER	CHECKER
ENGINEER	STRESS
ENGINEER J. Gaddone	
SUBMITTED	
APPROVED	

JOHN F. KENNEDY SPACE CENTER, NASA
KENNEDY SPACE CENTER, FLORIDA

PROCUREMENT SPECIFICATION, 6000 PSIG PRESSURE VESSEL, SPACECRAFT PROCESSING ELEMENT, GHE SYSTEM

SIZE	CAGE CODE	DWG NO	REV
A	22264	620FPC00001	A
SCALE None	UNIT WEIGHT —	SHEET 1 OF 26	

KSC FORM 21-2C NS (REV 9/00)

REVISION HISTORY					
PART NO.	ZONE	REV	DESCRIPTION	DATE	APPROVAL

CONTENTS

1. SCOPE....4

2. APPLICABLE DOCUMENTS....4
2.1 Governmental....4
2.2 Non-Governmental....5

3. REQUIREMENTS....6
3.1 Definition....6
3.2 Characteristics....7
3.3 Design and Construction....13
3.4 Documentation....16
3.5 Personnel and Training....16

4. VERIFICATION....17
4.1 Responsibility for Inspection....17
4.2 Non-Destructive Examination (NDE) Tests....17
4.3 Verification Inspections....17

5. QUALITY ASSURANCE....18
5.1 Inspection Control Point Outline....18
5.2 Additional Aerospace Quality Clause....19
5.3 Engineering Inspection Points....22

6. TRANSPORTATION....22
6.1 Advance Shipping Notice....22
6.2 Preservation and Packaging....22
6.3 Packing....23

7. NOTES....23
7.1 Intended Use....23
7.2 Definitions....23
Appendix A....25
Appendix B....26

REVISION HISTORY					
PART NO.	ZONE	REV	DESCRIPTION	DATE	APPROVAL

Abbreviations, acronyms, and symbols

ASME	American Society of Mechanical Engineers
CCL	Commerce Control List
CFR	Code of Federal Regulations
EAR	Export Administration Regulations
EC	export control
ECCN	Export Commerce Control Number
F	Fahrenheit
ft	Foot
GHe	gaseous helium
ITAR	International Traffic in Arms Regulations
IFB	Information for Bid
KSC	John F. Kennedy Space Center
MAWP	Maximum Allowable Working Pressure
NASA	National Aeronautics and Space Administration
NIC	not in contract
NLR	no license required
N/A	Not Applicable
psig	pounds per square inch gage
SBU	Sensitive But Unclassified
USML	U.S. Munitions List

REVISION HISTORY					
PART NO.	ZONE	REV	DESCRIPTION	DATE	APPROVAL

1. SCOPE

This procurement specification establishes the minimum design, fabrication, inspection and quality control requirements for two 200 cubic foot water volume capacity, ASME code stamped high pressure storage units for a nominal 6000 psig gaseous Helium (GHe) distribution system. The vessels are to be designed to allow for the vessels to be stacked onto one another and to allow for vessels to be located on a concrete slab (NIC) adjacent to each other. They are to be located / operated at the Kennedy Space Center (KSC), Florida at the east end of Multi Payload Processing Facility (MPPF).

The contractor shall furnish the supervision, labor, materials, tools, equipment, record prints, and testing required for design and fabrication of these vessels. The contractor is hereby informed that there may be frequent visits to the shop during manufacture of the vessel by the NASA contracting technical representative.

2. APPLICABLE DOCUMENTS

The following documents form a part of this document to the extent specified herein. The latest revision applies unless a specific revision is indicated. However, when this document is used for procurement, including solicitations, or is added to an existing contract, the specific revision levels, amendments, and approval dates of said documents shall be specified in an attachment to the Solicitation/Statement of Work/Contract.

2.1 Governmental

2.1.1 Standards

John F. Kennedy Space Center, NASA

KSC-GP-425	Engineering Standards
KSC-STD-E-0015	Marking of Ground Support Equipment
KSC-C-123	Surface Cleanliness of Fluid Systems, Specification for

REVISION HISTORY					
PART NO.	ZONE	REV	DESCRIPTION	DATE	APPROVAL

National Aeronautic and Space Administration

NASA-STD-5008	Protective Coating of Carbon Steel, Stainless Steel, and Aluminum on Launch Structures, Facilities, and Ground Support Equipment.
NPR 6000.1	Requirements for Packaging, Handling, and Transportation for Aeronautical and Space Systems, Equipment, and Associated Components

Federal

FED-STD-595	Federal Color Standard

2.1.2 Other Documents

75M50393	Plate Identification, KSC, GSE

(Copies of specifications, standards, drawings, and publications required by suppliers in connection with specified procurement functions should be obtained from the procuring activity or as directed by the Contracting Officer.)

2.2 Non-Governmental

American Society of Mechanical Engineers

The following documents of the issue and addenda in effect on the date of IFB release form a part of this specification to the extent specified herein.

REVISION HISTORY					
PART NO.	ZONE	REV	DESCRIPTION	DATE	APPROVAL

ASME B16.5	Pipe Flanges and Flanged Fittings
ASME B16.9	Factory Made Wrought Buttweld Fittings
ASME BPVC Section VIII Division 1	Rules for Construction of Pressure Vessels – Division 1
ASME BPVC Section VIII Division 2	Rules for Construction of Pressure Vessels – Division 2 Alternate Rules
ASME BPVC Section VIII Division 3	Rules for Construction of Pressure Vessels – Division 3 Alternate Rules for Construction of High Pressure Vessels
ASME BPVC Section IX	Welding and Brazing Qualifications
ASME BPVC Section V	Nondestructive Examination

(Applications for copies should be addressed to the American Society of Mechanical Engineers, Inc., 22 Law Drive, P.O. Box 351040, Miami, FL 33135).

ASTM International

The following documents of the issue and addenda in effect on the date of IFB release form a part of this specification to the extent specified herein.

ASTM E515	Standard Practice for Leaks Using Bubble Emission Techniques

3. REQUIREMENTS

3.1 Definition

The 6000 psig (nominal pressure) GHe pressure vessels will be located at the MPPF to store high pressure gaseous helium for purging and flight vehicle helium fills. The vessels will be connected by others to the facility regulation panel and fill panel.

REVISION HISTORY					
PART NO.	ZONE	REV	DESCRIPTION	DATE	APPROVAL

3.2 Characteristics

3.2.1 Performance Characteristics

3.2.1.1 Design Pressure The design pressure, as defined by ASME Code, of the pressure vessel shall be 6600 psig. The design pressure shall be limited by the shell or head, not by minor parts.

3.2.1.2 Corrosion Allowance A corrosion allowance of 1/8 inch is required on pressure vessel shell and heads.

3.2.1.3 Design Temperature The design temperature (Coincident metal temperature) as defined in Section VIII of the ASME Code shall be 150 degrees F. Minimum permissible temperature shall be 0 degrees F.

3.2.1.4 Normal Operating Conditions Normal operating conditions of the pressure vessel are as follows:

a. Operating Pressure	6000 psig
b. Ambient temperature range	20 to 110 deg F
c. External pressure	Atmospheric
d. Fluid content	Gaseous Helium
e. Cycle rate per year	50 cycles
f. Pressure range per cycle	500 to 6000 psig

3.2.1.5 Operating Life This pressure vessel is to be designed as a permanent installation with a minimum operational life of 30 years.

3.2.1.6 Design Calculations This pressure vessel shall be designed and constructed such that it meets the requirements of the ASME Boiler and Pressure Vessel Code. Stress calculations must include, but are not limited to the following:

a. Loads resulting from the internal design pressure, external pressure, and temperature gradient effects

REVISION HISTORY					
PART NO.	ZONE	REV	DESCRIPTION	DATE	APPROVAL

b. Wind load per ASCE-7 for Kennedy Space Center, Florida.

c. No seismic calculation required.

d. Dead weight loads of vessel materials.

e. Loads due to weight of contents based on maximum capacity and operating conditions specified herein.

f. Maximum concentrated stresses associated with saddles, pads, supports, etc. due to shear, bending, and torsion

g. Superimposed load on vessel resulting from the weight of a fully loaded GHe storage vessel of equal size and specification stacked above it.

These design drawings/calculations shall be submitted with the design proposal to the contracting officer for approval by the responsible NASA design engineers prior to fabrication.

REVISION HISTORY					
PART NO.	ZONE	REV	DESCRIPTION	DATE	APPROVAL

3.2.2 Physical Characteristics

3.2.2.1 Vessel Envelope The pressure vessel shall be cylindrical, single layer, seamless or welded with seamless heads concave to internal pressure. The pressure vessel shall be supported in the horizontal position with the structural capability of supporting an additional vessel of equal or less capacity stacked above it. The vessel envelop dimensions are illustrated in Figure 1. Each vessel shall be no greater than 30 ft horizontal length and 8 ft vertical height.

3.2.2.2 Moisture Entrapment The design shall eliminate the possibility of moisture entrapment from both the interior and exterior of all pressure vessel components and associated hardware including supports.

3.2.2.3 Attachment Pads Attachments (excluding nozzles) shall be welded to a pad with the same material composition as that used in the head and shell. The pad shall have rounded corners (minimum ½ inch radius) and shall extend at least two inches in each direction from the point of attachment and three inches from a seam weld. The pad shall be attached to the shell or head with a continuous fillet weld. Weep holes shall be placed in the attachment pads to indicate leakage.

3.2.2.4 Openings This pressure vessel shall be provided with two openings constructed in accordance with the ASME Code. One opening shall be designated for each of the following functions:

a. Connection to system piping

b. Inspection purposes

For approximate nozzle locations and schedule, see figure 1.

Additional inspection openings may be added to comply with ASME code requirements. Opening connections shall be similar to those describes in section 3.2.2.5.1.

REVISION HISTORY					
PART NO.	ZONE	REV	DESCRIPTION	DATE	APPROVAL

3.2.2.5 Pressure Connection Interfaces- Nozzle interfaces shall be full design pressure rated mechanical connections at MAWP (6600 psi). Socket weld joints shall not be used.

3.2.2.5.1 Vessel Connection –Vessel ports shall be Grayloc style buttweld hubs, material A-182-F316/F316L or equal.

3.2.2.5.2 Mating Connection – Blind hub, clamp, and seal shall be provided by the contractor for the inspection port. Material for the blind hub and clamp shall be the same as the vessel connection. The seals shall be AISI 630 (17-4 PH) PTFE coated. Tapped hub with clamp and seal ring shall be provided by the contractor for the supply port as shown in Figure 2.

3.2.2.6 Lifting Lugs Each Vessel shall be provided with crane attachment points for lifting.

REVISION HISTORY					
PART NO.	ZONE	REV	DESCRIPTION	DATE	APPROVAL

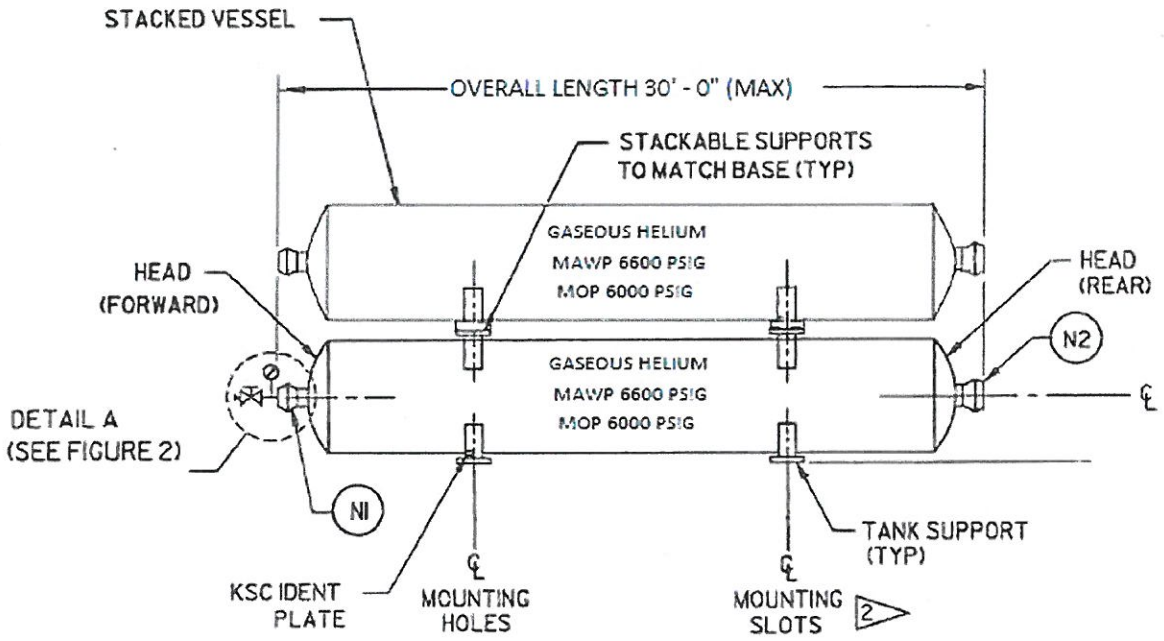

PRESSURE VESSEL ELEVATION

NTS

NOTES:

1. EXACT DIMENSION TO BE FIXED BY MANUFACTURER
2. SLOTTED HOLES IN BASE SUPPORT AND STACKABLE SUPPORT AT ONE END ONLY TO ALLOW FOR EXPANSION/CONTRACTION OF THE VESSEL (VESSELS)

NOZZLE SCHEDULE					
ITEM NO.	NOMINAL PIPE SIZE	SERVICE	MAWP (PSI)	LOCATION	INTERFACE CONNECTION
NI	1-1/2 IN	GAS IN/OUT	6600	HEAD, FWD	PER SECTION 3.2.2.5.1
N2	3 IN	INSPECTION	6600	HEAD, REAR	PER SECTION 3.2.2.5.1

Figure 1. Pressure Vessel Configuration

REVISION HISTORY					
PART NO.	ZONE	REV	DESCRIPTION	DATE	APPROVAL

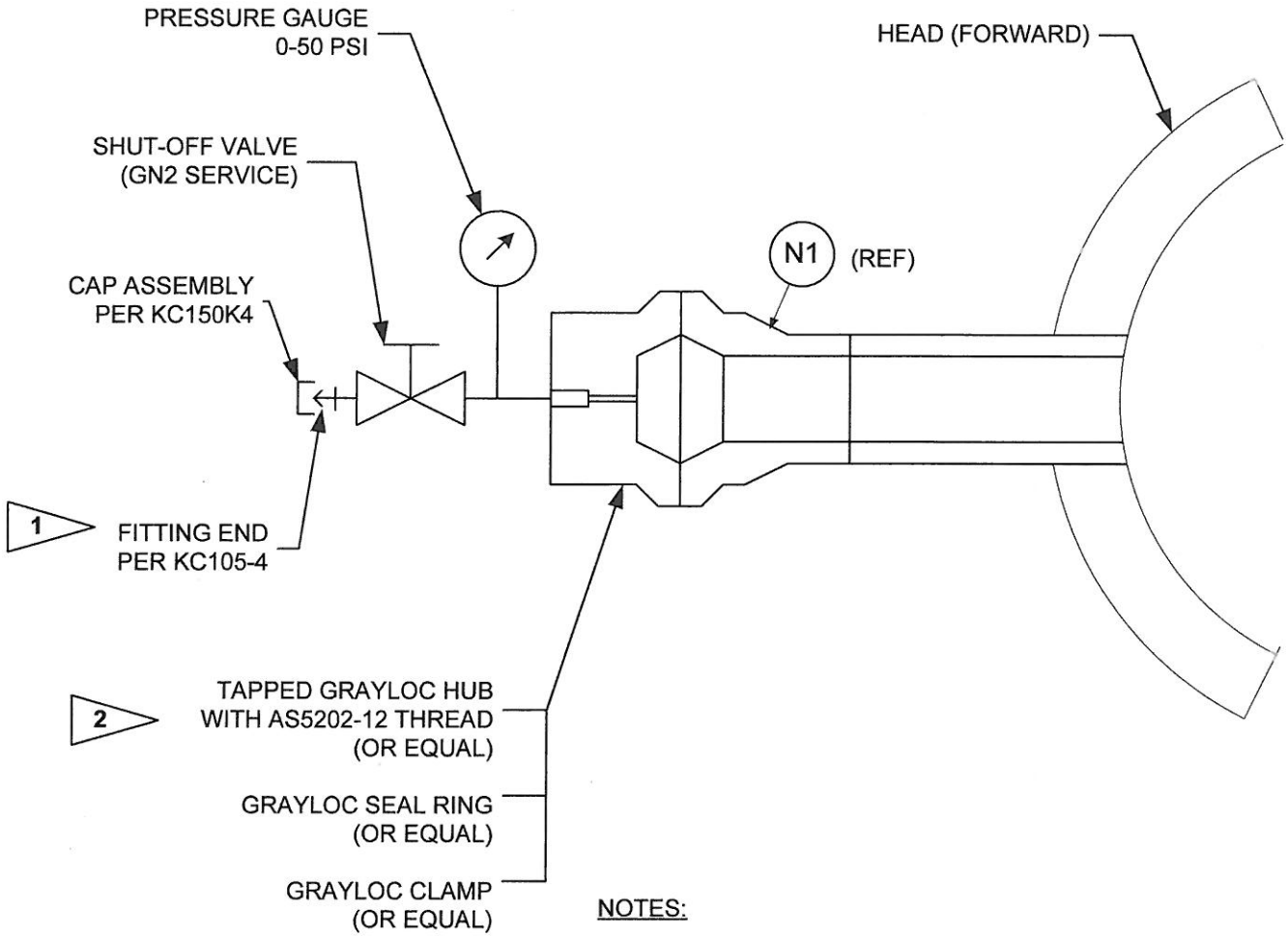

NOTES:

1. USE ADAPTER BOSS-TO-TUBE (REF: KC112K4), OR NIPPLE PIPE-TO-TUBE (REF: KC116K4)

2. USE ADAPTER AS REQUIRED TO MATE WITH AS5202-12 TAPPED HUB

3. SPECIFICATIONS FOR KC ITEMS ARE CONTAINED IN DOCUMENT KSC-GP-425

DETAIL A
NTS

Figure 2. Shipping Hub Assembly

REVISION HISTORY					
PART NO.	ZONE	REV	DESCRIPTION	DATE	APPROVAL

3.2.3 Reliability

The pressure vessel shall be designed to safely endure pressure cycling of not less than 1500 cycles of the above temperature and pressures.

3.2.4 Environmental Conditions

This pressure vessel will be exposed to the elements in a salt corrosive, semi-tropical environment at the Kennedy Space Center in Florida. Protective coating shall be as specified in KSC-STD-5008 for Zone 4a. NACE inspection shall be required for all surface preparations and coating applications. Site location will be in an open area east of the MPPF building. Temperature effects due to solar radiation will be calculated at peak summer loads for 28 degrees latitude north.

3.2.5 Transportability

N/A

3.3 Design and Construction

3.3.1 Design

3.3.1.1 The manufacturer shall verify the need for fatigue analysis based on the materials selected, and on the information provided in 3.2.1.4 and 3.2.3.

3.3.1.2 All analysis and engineering shall be in US customary units.

3.3.1.3 The two high pressure gaseous helium storage vessels shall be designed, fabricated, tested, and quality controlled to the requirements of the ASME Boiler and Pressure Vessel Code, Section VIII, Division 2, Latest addenda (hereafter referred to as the ASME Code). The vessels shall be ASME Code stamped for Section VIII, Division 2 and registered with the National Board of Boiler and Pressure Vessel Inspectors.

Note #1: At the discretion of the manufacturer, the vessels may be certified and code stamped in accordance with the ASME Code Section VIII, Division 1, if they meet all of the requirements of Division 1, or may be certified and code stamped in accordance with the ASME Code Section VIII, Division 3, if they meet all of the requirements of Division 3. The requirements in this specification are referenced to ASME Code Section VIII, Division 2, as a minimum standard.

Note #2: In the case of a difference or conflict between this specification and reference specifications, this specification shall govern. The Contract Administrator shall be notified immediately of any such discrepancies as they arise.

REVISION HISTORY					
PART NO.	ZONE	REV	DESCRIPTION	DATE	APPROVAL

3.3.1.4 The manufacturer of the pressure vessels specified herein must hold a current ASME Code stamp. This ASME Code stamped pressure vessel shall be registered with the National Board of Boiler and Pressure Vessel Inspectors.

3.3.1.5 All structural components not designed per 3.3.1.3 shall be designed to a minimum safety factor of 2 against deformation or yielding that impairs the function of the part and a minimum safety factor of 3 against collapse, buckling, or failure to support design loads.

3.3.1.6 All lifting lugs shall be designed to a minimum design load safety factor of 5 against ultimate material strength.

3.3.1.7 Vessel nozzles shall extend a minimum of 18 inches from the outside surface of the vessel head.

3.3.2 Welding and Weld Inspection

3.3.2.1 All pressure vessels welding shall be performed by qualified welders per weld procedure specifications for each weld in accordance with ASME Boiler and Pressure Vessel Code, Section IX.

3.3.2.2 Joint efficiency of all welds subject to internal design pressure or external loading shall be 100% percent. All pressure containment welds shall be 100% radiograph inspected. Radiography records shall be provided digitally. Weld traceability maps of welder and procedure number at each joint are required.

3.3.2.3 All structural welds shall be in accordance with the American Welding Society Code, AWS D1.1, except vessel structural attachment welds which shall be in accordance with the ASME Code as specified.

3.3.2.4 All welding procedures and welder/welder-operator qualifications shall be submitted to the Contracting Officer for verification and approval by the responsible NASA organization prior to fabrication.

3.3.2.5 Weld inspections shall be performed by inspectors trained and certified in use of techniques being applied, in accordance with the requirements of the ASME Boiler and Pressure Vessel Code, Section V.

3.3.3 Protective Coating

All externally exposed carbon steel surfaces of this pressure vessel assembly shall be coated in accordance with NASA-STD-5008 and the following: Pressure vessel unit to be located in a zone 4a exposure area. Top coat finish color shall be white, similar to No.17925 per FED-STD-595. The Contractor shall provide NACE certifying coated inspector for conformance to protective coating standard NASA-STD-5008. All required identification plates shall be attached after painting. Care

REVISION HISTORY					
PART NO.	ZONE	REV	DESCRIPTION	DATE	APPROVAL

must be taken to maintain the integrity of the protective coating between dissimilar metals.

3.3.4 Cleanliness

The Contractor is responsible for the cleaning of the pressure vessel assembly. The pressure vessels shall be cleaned and verified to the following levels in accordance with KSC-C-123:

a. Internal surfaces of the vessel and all appurtenances that contact the service medium (GHe) shall be designated as critical surfaces and shall be cleaned to level 100A.

b. All other surfaces shall be cleaned to level VC.

Note: A copy of the contractor's detailed cleaning and verification procedures shall be submitted to the Contracting Officer for approval prior to implementation of the cleaning process.

3.3.5 Materials, Processes, and Parts

The pressure vessel assembly, including shell, head and nozzles/connections shall be fabricated from compatible carbon/low alloy steels and shall an acceptable material for the application per ASME code. Materials selection shall be made by the contractor. All materials that contact the service media shall be compatible. Welding of dissimilar metals shall be avoided except for nameplates or tags or where specifically called out in this specification.

3.3.5.1 Parts

Standard and commercial parts shall be used whenever possible provided they conform to all listed requirements in this specification.

3.3.6 Name Plates and Product Marking

The following title shall be lettered in black, similar to No. 17038 per FED-STD-595 on both sides of the cylinder body in block letters (Minimum of four inches high):

GASEOUS HELIUM
MAWP 6600 PSIG
MOP 6000 PSIG

In addition to the vessel nameplate marking required by the ASME Code, a KSC GSE identification plate per 75M50393-2 shall be permanently attached to the vessel assembly in a place readily accessible for inspection. Upon final acceptance of the completed vessel by the Contracting Officer or his designee, the information called for in Note 7, item A thru N, of the drawing 75M50393 shall be die stamped per KSC-STD-E-0015 with 0.10 inch characters in the appropriate blocks. This information shall be verified by the manufacturer, through the Contracting Officer, prior to stamping.

REVISION HISTORY					
PART NO.	ZONE	REV	DESCRIPTION	DATE	APPROVAL

3.3.7 Workmanship

The fabricated assembly shall be clean and free from burrs, sharp edges, casting projection, metal shavings, dirt, and other foreign matter. There shall be no cracks, breaks, bends, dents, chips or gouges, loose connections, loose attaching parts, misalignment, or other defects that could render the vessel assembly unsuitable for its intended use as specified herein. Metal corners should be radiused and edges ground smooth.

> Note: Failure to maintain acceptable standards of workmanship, as determined by the Contracting Officer or his designee through visual inspection, may result in rejection of the finished product.

3.3.8 Safety

Per Contractor's safety procedures.

3.4 Documentation

A data package shall be maintained throughout the duration of the contract and shall contain all correspondence between the contractor and the Contracting Officer, vessel manufacturer's data report, design calculations, vendor certified material specifications, component specifications (including original manufacturer's part numbers), shop fabrication/erection drawings, test and inspection reports, digital radiography records, shipping data, and all other documentation required to administer the successful completion of this contract. The contractor shall submit all shop drawings to the Contracting Officer or his designee for approval prior to procurement, fabrication, and/or installation. Changes in material requirements shall require documentation and approval by the Contracting Officer or his designee.

The completed data package shall be turned over to the Contracting Officer upon successful completion of all tasks required by this contract. All documents shall be submitted in an electronic format that is searchable (e.g., PDF). For documents that were scanned, the Contractor shall run "paper capture" or optical character recognition to convert the file to a searchable format before submittal. As-built or redline drawings shall be scanned from the original size redline copies so any handwritten mark-ups or comments are legible, the original as-built or redlines shall be included in the hard copy of the ADP.

The data package shall contain all the documents listed in the Contract Data Requirements List (CDRL) in Appendix A.

3.5 Personnel and Training

As required for vessel design, fabrication, and testing per this specification.

REVISION HISTORY					
PART NO.	ZONE	REV	DESCRIPTION	DATE	APPROVAL

4. VERIFICATION

4.1 Responsibility for Inspection

Unless otherwise specified in the contract or order, the supplier shall be responsible for the performance of all inspection requirements as specified herein. Except as otherwise specified, the supplier may use his own facilities or any commercial laboratory acceptable to the Government. The Government reserves the right to perform any of the inspections set forth in the specification where such inspections are deemed necessary to ensure supplies and services conform to prescribed requirements.

The manufacturer will allow the Contracting Officer or his designee ready and safe access to the work in progress in order to determine that the fabrication is being accomplished in accordance with the approved shop drawings and this specification.

KSC Quality and the KSC Engineering Contracting Officer's Technical Representative (COTR) shall be notified of scheduled work in accordance with the Inspection Control Point Outline/Mandatory Inspection Points table in Appendix B.

4.2 Non-Destructive Examination (NDE) Tests

All full penetration butt welds shall be 100% digitally radiographed in accordance with Section VIII of the ASME Code. All partial penetration welds shall be tested by magnetic particle or liquid penetrant methods per Section VIII of the ASME Code. Any weld flaws identified through this testing shall be removed and repaired in accordance with Section VIII of the ASME Code. Results of all tests shall be documented per Section VIII of the ASME Code, and made available to the Contracting Officer or his designee upon request.

4.3 Verification Inspections

4.3.1 Hydrostatic Test

Each pressure vessel shall be subjected to a hydrostatic test in accordance with the ASME Code. The contractor shall be responsible for providing approved hydrostatic test procedures, as required by the ASME Code, to the Contracting Officer for coordination of approvals prior to test. The hydrostatic test pressure shall be maintained for an adequate time to permit a thorough inspection, in any case not less than 30 minutes. No permanent deformation or defects shall occur in the vessels as a result of the hydrostatic testing. Hydrostatic test fluid shall be clean potable water. The test fluid shall not have been used to test any other vessel. The vessel shall be hydrostatically tested prior to painting or cleaning.

4.3.2 Pneumatic Leak Test

The vessels shall be pneumatically leak tested, fully assembled, at design pressure with clean dry

REVISION HISTORY					
PART NO.	ZONE	REV	DESCRIPTION	DATE	APPROVAL

helium prior to delivery to KSC. The vessels shall maintain the test pressure for a minimum of one hour prior to leak detection testing. All weld seams, nozzle attachments, pipe hub assemblies, fittings, etc. shall be tested using bubble soap test per ASTM E515 or ASME BPVC Section V, Article 10.

4.3.3 Cleanliness

All vessel surfaces shall have foreign material which was introduced by the manufacturing process, such as scale, dirt, grit , grease, solid objects, welding slag, weld splatter, and hydrocarbons removed. After the final hydrostatic test, the pressure vessels shall be dried and cleaned thoroughly inside and outside. Any residual solids which were deposited as a result of the test water shall be removed. The vessel shall be precision cleaned, verified, packaged and maintained to the level specified in section 3.3.4.

5. QUALITY ASSURANCE

The Contractor shall comply with the following quality clauses.

5.1 Inspection Control Point Outline

Special inspections, called mandatory inspection points (MIP), will be designated by the Government during the performance of this contract. Prior to the start of work, the Contractor shall provide the NASA KSC Quality Assurance Representative (QAR) a schedule and Inspection Control Point Outline (ICPO) which shows the work sequence(s) to be employed during the performance of this Purchase Order. The contractor's schedule/ICPO must indicate what types of contractor inspections will be performed and where in the contract's sequence of events they will be accomplished. If applicable, the schedule/ICPO must also indicate the specification(s) (including revisions) and/or other documentation that will be used to perform the indicated inspections. The Government will identify which inspections/tests/work steps require Government Quality Assurance (GQA) witness. These inspections/tests and/or work steps will be designated as GMIPS. The contractor shall notify The NASA KSC QAR at least five (5) working days prior to the occurrence of a scheduled, designated GMIPS. Designation of GMIPS does not relieve the contractor of the obligation to perform all contractually required inspections.

5.1.1 Mandatory Inspection Points

Quality Assurance inspection shall be included in contractor procedures and ICPO, but not limited to the following tasks:

- Reference the attached Mandatory Inspection Points table in Appendix B and note the notification requirement.

5.1.2 Notification

The KSC Contracting Officer's Technical Representative (COTR) and KSC QAR shall be notified for

REVISION HISTORY					
PART NO.	ZONE	REV	DESCRIPTION	DATE	APPROVAL

Government Quality Inspection/witness for each of the milestones, as determined by GQA in Appendix B, a minimum of five (5) working days prior to initiating the task.

5.1.3 Contamination Control

The Contractor's cleaning procedures shall include Quality Assurance provisions for in-process controls to prevent contamination, including provisions for maintaining cleanliness of on-site, pre-packaged components, and sub-assemblies. The Contractor shall double package all precision cleaned components.

5.1.4 Component Traceability

Cleanliness certifications, hydrostatic and leak test results, and material certifications must be traceable to each item or component with a unique identifier (commonly referred to as A-Numbers or Find Numbers) and/or serial number. Copies of test results, certifications, and component data sheets shall be included in the final Acceptance Data Package for each unique component.

5.2 Additional Aerospace Quality Clause

The Aerospace Quality clauses have been derived from AS9100 requirements. The Contractor should already be in compliance with AS9100 upon contract award and shall comply with the following clauses of this SOW.

5.2.1 AQC04 Flow Down Requirements Clause

This clause mandates that all applicable requirements that are invoked or applied to the customer's purchasing document, including this clause, shall be flowed down to the Contractor's sub-tier suppliers.

5.2.2 AQC06 Certificate of Compliance – Raw Materials

The following clause applies when the Contractor will purchase (not including Government Furnished Equipment) raw materials to defined specification(s).

The Contractor will include with each shipment the raw material manufacturer's test report (e.g., mill test report) that states that the lot of material furnished has been tested, inspected, and found to be in compliance with the applicable material specifications. The test report will list the specifications, including revision numbers or letters, to which the material has been tested and/or inspected and the identification of the material lot to which it applies.

When the material specification requires quantitative limits for chemical, mechanical, or physical properties, the test report will contain the actual test and/or inspection values obtained. For aluminum mill products (except castings), certifications for chemistry may indicate compliance within the allowed range. Certifications for physical properties will show actual values.

When contractor supplies converted material produced by a raw material manufacturer, the contractor

REVISION HISTORY					
PART NO.	ZONE	REV	DESCRIPTION	DATE	APPROVAL

shall submit all pre and post conversion chemical / physical tests reports

5.2.3 AQC08 Special Process Certification

Certain special processes are required to comply with this contract. Special processes shall be performed only by sources that have been surveyed and qualified/approved, by the supplier and/or the Customer, to perform those processes. The contractor shall provide to the Customer upon request all documentation showing evidence of special processor qualification and/or certification to perform special manufacturing, assembling, and test processing as required by the contract. The Contractor may elect to use only Customer approved sources.

A special process certification shall be provided with each shipment of item(s) delivered on this contract. Special Process Certifications may be in supplier format and shall include the following:

Customer's Order number
Part number(s)
Serial and/or lot numbers, of the hardware processed (if applicable,)
Material process specification & revision
Objective evidence demonstrating compliance with the applicable process, (e.g., temperature charts and hardness test results for heat treatment, destructive test results, etc.)
A certification stating the special process was performed per the applicable drawing/specification requirements.
Organization's name and address

When special processor is other than the Organization, provide a certification of compliance from the special processor stating the special process was performed per the applicable drawing/specification requirements. Certifications must include the processor's name, address and be signed and dated by a company official.

Each certification must be signed and dated by a company official of the Organization and/or Processor attesting to the acceptance of the processes performed to the required specification(s).

The supplier shall retain all records associated with the selection and approval of supplier approved special process providers. Per contract or regulatory agency requirements, these records shall be made available to the Customer and/or regulatory agencies upon request. The supplier shall notify the Customer prior to destruction of records relative to this contract.

The Contractor shall insert the substance of this clause, including this sentence, in all lower-tier subcontracts for work performed under this contract.

The special processes involved with this Delivery Order are cleaning and welding (where applicable to specification).

REVISION HISTORY					
PART NO.	ZONE	REV	DESCRIPTION	DATE	APPROVAL

5.2.4 AQC16 Nondestructive Inspection/Nondestructive Test Certification

The Contractor will include with each shipment a certificate for the nondestructive inspection (NDI)/nondestructive test (NDT) performed. As a minimum, the certification shall contain the following information:

Customer's Purchase Order / Contract number
Name and address of the Company performing NDI/NDT;
Date of Inspection;
Quantity of parts tested by part number;
Specification or other requirement defining the NDI/NDT acceptance / rejection criteria;
Inspector/name/stamp and NDI/NDT certification level;
NDI/NDT specification including revision;
Material or item identification (part number, heat lot number, Foundry Record (FR) number;
Material or item traceability (serial number, lot number, batch number, lot/date code);
Inspection results (accept/reject);
Reference to previous NDI/NDT reports for repair/rework if applicable;
Reference to attached recordings i.e., films or photographs if applicable.

These records shall include all information required in the previous paragraph as well as acceptance / rejection criteria, and related test instrument data used in the NDI/NDT process.

5.2.5 AQC17 100% Attribute Clause

The Contractor is responsible for the performance, on a one hundred percent (100%) basis of all inspections and tests and record requirements specified in the contract. Unless otherwise specified in the contract, the Contractor may utilize independent inspection and testing laboratories or services that are acceptable to the Government.

5.2.6 Q39 Objective Evidence of Dimensional Inspection

The Contractor shall provide objective evidence with each shipment that all the articles were dimensionally inspected for conformance with drawing and Contract/Purchase Order requirements. Objective evidence shall consist of records of actual dimensional readings taken during inspections, of each part, with the dimension and its tolerance noted. All out of tolerance measurements shall be clearly identified on the records, and the disposition of that part noted by the Organizations quality assurance organization. This information is to be submitted to NASA for acceptance/rejection of the out-of-tolerance condition, prior to submittal of the hardware. Organization shall identify each inspection data sheet to the related Contract/Purchase Order, part number, revision and when applicable, serial number. The management representative responsible for the Contractor's inspection activity, will certify that with signer's title and date of signature indicated that all of the shipped parts were indeed inspected to the criteria specified and those actual measurements are the ones provided. If serial numbers are not assigned, then the supplier shall devise a method of linking the record of dimensional measurements with the specific part measured (i.e., taped, bagged together, etc.) Inspection equipment (i.e.: tools &

REVISION HISTORY					
PART NO.	ZONE	REV	DESCRIPTION	DATE	APPROVAL

gages) used during dimensional measurement shall have its identification numbering recorded and have the ability to recall the parts inspected with that particular inspection device in the event it is subsequently found to be significantly out of tolerance.

5.3 Engineering Inspection Points

In addition to the Mandatory Inspection Points, NASA Engineering inspection shall be included, but not limited to the following tasks:

Reference the attached Mandatory Inspection Points table in Appendix B and note the notification requirement.

6. TRANSPORTATION

The Contractor is responsible for all fixtures, tie-downs and supports and any applicable permits required for shipping.

The Point of Acceptance will be Kennedy Space Center. Unless otherwise directed, the Contractor will ship all parts to:

Transportation Officer, NASA
ISC Warehouse Building, M6-744
Kennedy Space Center, FL 32899

6.1 Advance Shipping Notice

An Advanced Shipping Notice is a courtesy letter or fax which provides advance shipping information to the NASA COTR to coordinate the receipt of the shipped items with the NASA receiving, transportation, and management personnel. Complete shipping plan due 10 days prior to each shipment. The Contractor shall furnish the following written information to the NASA COTR or his authorized designated representative five (5) days prior to each shipment:

- Date of Shipment
- Method of Shipment
- Complete or Partial Shipment
- Number of Cartons
- Total Weight
- Dimensions

6.2 Preservation and Packaging

Transport pressure vessels per NPR 6000.1 Class IV level C

Note: The vessel shall be maintained under a minimum of 5 psig internal pressure with dry nitrogen

REVISION HISTORY					
PART NO.	ZONE	REV	DESCRIPTION	DATE	APPROVAL

(dew point -75 deg. F) at all times until acceptance.

For shipment hub see figure 2.

Vessel internal pressure shall be checked and recorded prior to shipment for validation at receiving site prior to acceptance.

6.3 Packing

There is no requirement for this pressure vessel assembly to be boxed, crated, skidded, or covered for shipment. Bolts, nuts, spare gaskets, and other loose parts shall be packaged to prevent loss or damage. Open ports shall be covered to maintain the specified cleanliness level on critical surfaces.

7. NOTES

7.1 Intended Use

These pressure vessels are intended to be used for permanent onsite storage of the high pressure GHe supply source for the Multi payload Processing Facility (MPPF) at KSC.

They will be permanently installed on a concrete pad (NIC) outside of the MPPF in a location determined by others. It will be charged to 6000 psi and maintained at or near that level through routine servicing in order to supply the GHe activities in the MPPF.

7.2 Definitions

For the purpose of this document, the following definitions shall apply.

a. **shall:** Used to indicate a requirement which must be implemented and its implementation verified;

b. **should**: used to indicate a goal which must be addressed by the design but is not formally verified;

c. **will**: used to indicate a statement of fact and is not verified. In some cases the values of quantities included in this requirement have not been determined and are designated as "to be resolved" (TBR), "to be determined" (TBD) or "to be supplied" (TBS)

d. **TBR**: to be resolved / reviewed, involves data / processes to be designed /developed by contractor and provided to NASA at 45 percent and 90 percent design reviews for approval.

e. **TBD**: to be determined, involves data / processes in work at present by NASA, to be updated by NASA and incorporated to specification prior to contract award.

REVISION HISTORY					
PART NO.	ZONE	REV	DESCRIPTION	DATE	APPROVAL

f. **TBS**: to be supplied, involves data / process to be supplied by the contractor to NASA

NOTICE. The Government drawings, specifications, and/or data are prepared for the official use by, or on behalf of, the United States Government. The Government neither warrants these Government drawings, specifications, or other data, nor assumes any responsibility or obligation, for their use for purposes other than the Government project for which they were prepared and/or provided by the Government, or any activity directly related thereto. The fact that the Government may have formulated, furnished, or in any way supplied the said drawings, specifications, or other data is not to be regarded, by implication or otherwise, as licensing in any manner the holder or any other person or corporation nor conveying the right or permission to manufacture, use, or sell any patented invention that may relate thereto.

Custodian:

NASA – John F. Kennedy Space Center
Kennedy Space Center, Florida 32899

Preparing Activity:

John F. Kennedy Space Center
NE-F2

REVISION HISTORY					
PART NO.	ZONE	REV	DESCRIPTION	DATE	APPROVAL

Appendix A

Contract Data Requirements List (CDRL)

CDRL NO.	DESCRIPTION	QTY	Frequency	DELIVERY REQUIRED
C1	Progress Charts	Electronic	30 days	30 days after Contract award & each 30 days thereafter
C2	Subtier Contract Requirements	Electronic	Initial & each change	With proposal and ADP
C3	Technical Proposal Data	Electronic	Once	With Quote/Proposal
C4	Design Calculations	Electronic	Twice	45 days after effective date of order & with ADP
C5	Fabrication Drawings	Electronic and Hard Copy	Twice	45 days after effective date of order & with ADP
C6	Inspection Control Point Outline and Record	Electronic	Twice	With Fabrication drawings and with ADPS
C7	Acceptance Test Notification	Electronic	Twice	7 days prior to test and with ADP
C8	Acceptance Test Record	Electronic	Twice	1 day after test and one with the ADP
C9	Certification of Welders	Electronic	Twice	30 days from effective date of order
C10	Welding Procedure	Electronic	Twice	Prior to welding /ADP
C11	Certification of Weld Inspector	Electronic	Twice	30 days from effective date of order
C12	Weld Inspection Record	Electronic	Twice	Comp. Of welding & ADP
C13	NACE Inspector Certification	Electronic	Twice	10 days prior to paint & ADP
C14	NACE Inspection Record	Electronic	Twice	Comp. of painting & ADP
C15	Cleaning Procedure	Electronic	Twice	30 days prior to cleaning, w/ADP
C16	Minutes of Meetings	Electronic	Each Meeting	Each meeting and w/ADP
C17	Acceptance Data Package	Electronic and 1 Hard Copy	Once	With delivery of hardware
C18	Certificate of Compliance	Electronic	Once	With ADP
C19	Material Certification	Electronic	Once	With ADP
C20	Certification of Cleanliness	Electronic	Once	With ADPs
C21	Deviation & Waiver Request	Electronic	As Required	As needed; Approved Deviation/Waivers with ADP
C22	Request for Information (RFI)	Electronic	As Required	As needed and with ADP
C23	Field Discrepancy Reports (FDR's)	Electronic	As Required	As needed and with ADP
C24	Punch List with Disposition	Electronic	Once	With ADP
C25	Advanced Shipping Notice	Electronic	Each Shipment	Complete plan due 10 days prior to each shipment

REVISION HISTORY					
PART NO.	ZONE	REV	DESCRIPTION	DATE	APPROVAL

Appendix B

Inspection Control Point Outline/Mandatory Inspection Points

Inspection Control Point Outline (ICPO)			
1. Contractor Name:	TBD		
2. Contractor Address:	TBD	3. City/State:	TBD
4. Point of Contact:	TBD	5. POC Phone:	TBD
6. POC Email:	TBD		
7. Description of Procurement (including Contract number and Delivery Order number):			
TBD			
8. INSPECTIONS			

Line	Description of Inspection [Reference to Specification]	Planned Date of Performance	Performance Date	Contractor Stamp and Date	NASA Stamp and Date
1.	Quality and KSC Engineering Contracting Officer's Technical Representative (COTR) shall be notified when all welding is complete prior to coating.				
2.	Quality and COTR shall be notified 5-days prior to Hydrostatic Test.				
3.	Quality and COTR shall be notified and witness the Leak Testing.				
4.	Quality and COTR shall be notified prior to all blasting and coating operations				
5.	Quality and COTR shall be notified prior to precision cleaning analysis.				
6.	Quality and COTR shall be notified when assembly is ready for Final Inspection				