NOTICE: When Government drawings, specifications, or other data are used for any purpose other than in connection with a definitely related Government procurement operation, the United States Government thereby incurs no responsibility nor obligation whatsoever; and the fact that the Government may have formulated, furnished, or in any way supplied the said drawings, specifications or other data is not to be regarded by implication or otherwise as in any manner licensing the holder or any other person or corporation, or conveying any rights or permission to manufacture, use, or sell any patented invention that may in any way be related thereto.

SPECIFICATION REFERENCE NO 79K38878

REVITALIZE WATER & WASTEWATER SYSTEMS

VOLUME 5 OF 5 - W1 PUMP STATION REPLACEMENT

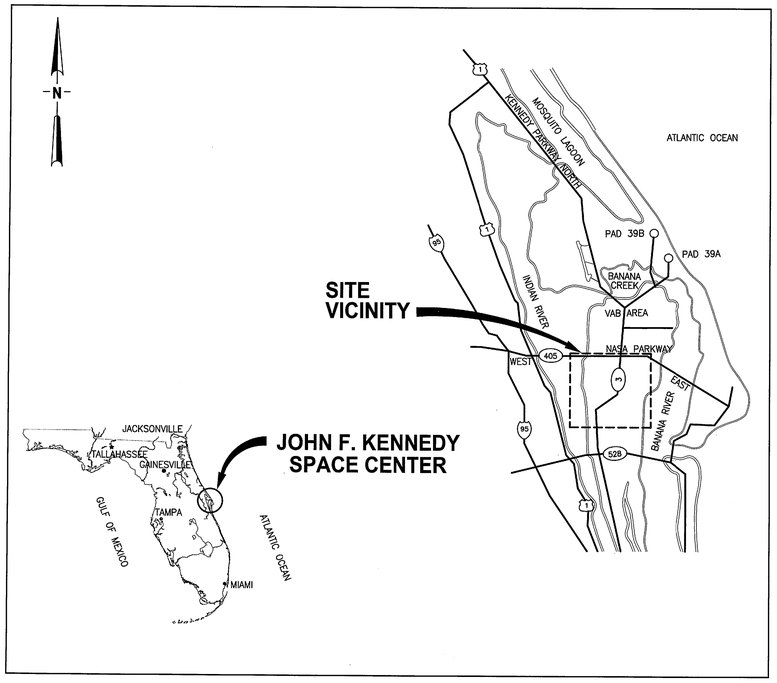

SITE VICINITY MAP

NTS

NASA
JOHN F. KENNEDY
SPACE CENTER

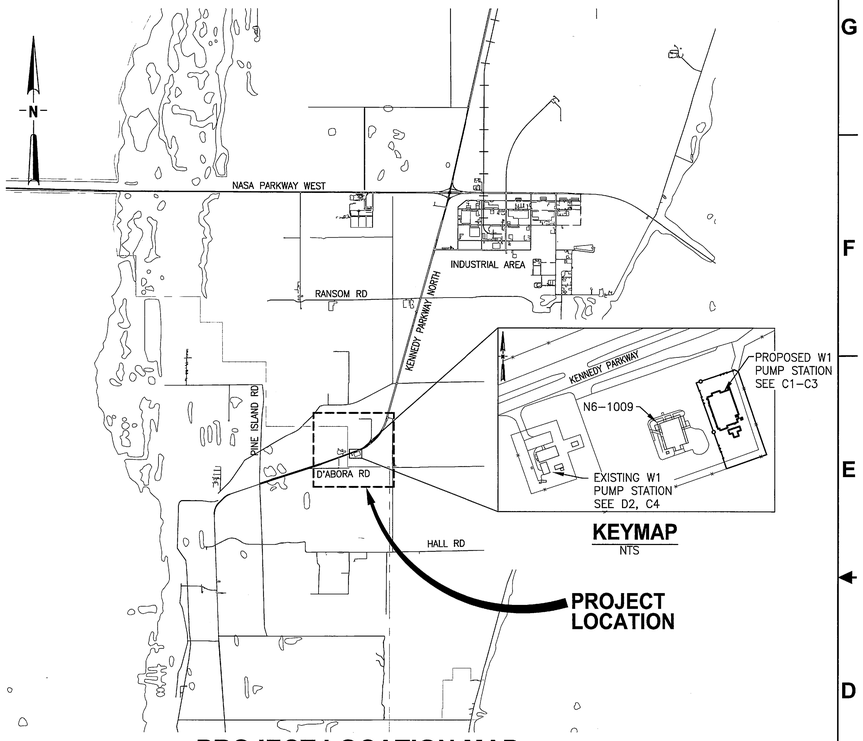

KEYMAP
NTS

PROJECT LOCATION MAP

NTS

Previous Water & Wastewater Packages - For Historical Tracking Only

PCN	Title	Document Type	Associated Study/Drawing/Spec Numbers
901961	Kennedy Space Center Water Distribution System	System Drawing	81K00694
902352	KSC Sanitary Sewer Collection System	System Drawing	81K00695
98307	Water Consumption Analysis Study	Study Report	KSC–TA–7292
98497	Kennedy Space Center Wastewater System Study Phase I	Study Report	KSC–DX–8046
98497.1	KSC Wastewater Study Phase II	Study Report	KSC–TA–8906
96968.2	Upgrade KSC Water and Wastewater Systems, Phase 3 –Water System Condition Assessment and Regional Modeling Report	Study Report	KSC–TA–10385
96968	Revitalize and Upgrade KSC Water & Wastewater Systems	Contract Documents	79K36173; 79K36174; 79K36255; 79K36256; 79K36257
96968.1	Upgrade KSC Water and Wastewater Systems, Phase 2	Contract Documents	79K38517; 79K38518; 79K38648; 79K38649; 98K05225
98814	Revitalize KSC Water Systems	Contract Documents	79K38699; 79K38700; 79K38701; 79K38702; 79K38720; 79K38721
98815	Revitalize KSC Wastewater Systems	Contract Documents	79K38703; 79K38704
96968.3	Revitalize Water & Wastewater Systems	Contract Documents	79K38877; 79K38878; 79K38879; 79K38880

NASA KSC Export Control Office (ECO)
Export/SBU Determination Record
EDDR#

TITLE OF DOCUMENT:

SENSITIVE BUT UNCLASSIFIED (SBU)
INSTRUCTIONS: This item must be reviewed under the requirements for "Sensitive But Unclassified Information" as described in NPR 1600.1, Chapter 5.24 http://nodis3.gsfc.nasa.gov/main_lib.html

	Yes	No	SBU Reviewer's Signature	Date
Document contains SBU?	☐	☒		12/9/11

EXPORT CONTROL (EC)
INSTRUCTIONS: If the document includes export-controlled data, contact your directorate Export Control Representative or the KSC ECO Help Desk (867-9209) for a determination of the proper export category.
http://exportcontrol.ksc.nasa.gov/index.cfm

ECO Reviewer's Name and Organization	*ECO Reviewer's Signature*	*Date*
PING YU, NASA TA-B3A		12/9/11

	EXPORT DETERMINATION (☒ one box only)	
EAR 99 NLR	☒ **EAR 99 NLR**	The information contained in the document is technical in content, but is not technical data as defined by the ITAR or the EAR, and therefore is EAR 99 NLR (no export license required). [General Prohibition Six (Embargo) applies to all items subject to the EAR, i.e. items on the CCL and within EAR 99 NLR. You may not make an export or re-export contrary to the provisions of part 746 (Embargos and Other Special Controls) of the EAR and 22 CFR part 126.1 of the ITAR.]
EAR Controlled	☐	This document is within the purview of the Export Administration Regulations (EAR), 15 CFR 730-774, and is export controlled. It may not be transferred to foreign nationals in the U.S. or abroad without specific approval of a knowledgeable NASA export control official, and/or unless an export license or license exceptica is obtained/available from the Bureau of Industry and Security, United States Department of Commerce. *Violations of these regulations are punishable by fine, imprisonment, or both.*
ITAR Controlled	☐	This document contains information which falls under the purview of the U.S. Munitions List (USML), as defined in the International Traffic in Arms Regulations (ITAR), 22 CFR 120-130, and is export controlled. It shall not be transferred to foreign nationals, in the U.S. or abroad, without specific approval of a knowledgeable NASA export control official, and/or unless an export license or license exemption is obtained/available from the United States Department of State. *Violations of these regulations are punishable by fine, imprisonment, or both.*

(Stamp Revision: (05-19-2009)

THIS SPACE RESERVED

SYM	ZONE	DESCRIPTION	DATE	APPROVED
A		ADDED SHEET – INITIAL RELEASE TO EDC	12/05/11	

REVISIONS

THIS DRAWING CREATED IN AUTOCAD 2010 FILE FORMAT AND WILL BE REVISED ONLY ON AN AUTOCAD SYSTEM. FILE: 14000189–DP5–V01.DWG

JONES EDMUNDS
730 NE WALDO ROAD, GAINESVILLE, FLORIDA 32641 / (352) 377-5821
3910 S WASHINGTON AVE, SUITE 210, TITUSVILLE, FLORIDA 32780 / (321) 269-2950

SIGNATURES	DATE
DRAWN J. ALLEN	12/05/11
CHECKED R. BEST	12/05/11
SUBMITTED M. CLARK	12/05/11
APPROVED R. COLLINS	12/5/11
APPROVED K. MILLER	12/5/11
P.Y. YU	12/9/2011

NATIONAL AERONAUTICS AND SPACE ADMINISTRATION
JOHN F. KENNEDY SPACE CENTER, NASA
KENNEDY SPACE CENTER, FLORIDA

REVITALIZE WATER & WASTEWATER SYSTEMS - VOLUME 5 OF 5
W1 PUMP STATION REPLACEMENT

COVER SHEET

FILE NO.	SIZE	DWG. NO.	REV
	F	79K38877 VOL 5	A

PROJ. NO. 96968.3 SHEET 1 OF 67

V1

KSC FORM 1-11 (3/76)(C/G 3/94)

NOTICE: When Government drawings, specifications, or other data are used for any purpose other than in connection with a definitely related Government procurement operation, the United States Government thereby incurs no responsibility nor obligation whatsoever; and the fact that the Government may have formulated, furnished, or in any way supplied the said drawings, specifications or other data is not to be regarded by implication or otherwise as in any manner licensing the holder or any other person or corporation, or conveying any rights or permission to manufacture, use, or sell any patented invention that may in any way be related thereto.

SPECIFICATION REFERENCE NO 79K38878

GENERAL NOTES

1. TOPOGRAPHIC SURVEY INFORMATION WAS PROVIDED BY JONES EDMUNDS ON SEP 31, 2011, THE SURVEY ONLY APPLIES WITHIN THE LIMITS OF SURVEY LINE SHOWN ON THE DRAWINGS. ELEVATION INFORMATION SHOWN IS FROM LIDAR FROM FDEM CONTRACT 07–HS–34–14–00–22–469 OBTAINED SEPTEMBER 2007 IN RESPONSIBLE CHARGE OF DAVID S. MAUNE, PSM OF DEWBERRY.

2. THE VERTICAL DATUM IS BASED ON NAVD 1988.

3. THE HORIZONTAL DATUM IS BASED ON THE NAD FLORIDA STATE PLANE EAST 1983.

4. A KSC EXCAVATION PERMIT IS REQUIRED FOR THIS PROJECT. CONTACT THE CONTRACTING OFFICER AND MISSION SUPPORT AT (321) 861–3840 FOR AN UNDERGROUND UTILITY SCAN.

5. ANY PROPERTY CORNERS, MONUMENTS, OR BENCH MARKS WITHIN THE PROJECT AREA SHALL BE PROTECTED. ANY DAMAGE TO SUCH ITEMS SHALL BE RESTORED BY THE CONTRACTOR AT NO ADDITIONAL COST TO THE GOVERNMENT. IF ANY SUCH ITEMS ARE IN DANGER OF DAMAGE OR HAVE BEEN DAMAGED, THE CONTRACTOR SHALL NOTIFY THE CO IMMEDIATELY.

6. THE CONTRACTOR SHALL OBTAIN THE SERVICES OF AN INDEPENDENT REGISTERED PROFESSIONAL LAND SURVEYOR FOR LAYOUT. PROOF OF REGISTRATION SHALL BE SUBMITTED TO THE CO 14 DAYS PRIOR TO STARTING THE SURVEY.

7. LOCATIONS, ELEVATIONS, AND DIMENSIONS OF EXISTING UTILITIES, STRUCTURES, AND OTHER FEATURES ARE SHOWN BASED ON INFORMATION AVAILABLE AT THE TIME OF PREPARATION OF THESE DRAWINGS BUT ARE NOT PURPORTED TO BE CORRECT. THERE MAY BE OTHER IMPROVEMENTS, UTILITIES, ETC. WHICH ARE WITHIN THE PROJECT AREA. CONTRACTOR SHALL VERIFY, PRIOR TO CONSTRUCTION, THE LOCATIONS, ELEVATIONS, DIMENSIONS, TYPES, AND CONDITIONS OF ALL EXISTING UTILITIES, STRUCTURES, AND OTHER FEATURES (WHETHER OR NOT SHOWN ON THE DRAWINGS) AFFECTING HIS/HER WORK.

8. THE CONTRACTOR SHALL FIELD VERIFY EXISTING UTILITIES (SIZE, MATERIALS OF CONSTRUCTION, OUTSIDE DIAMETER, WALL THICKNESS, ROUNDNESS, ELEVATIONS, ETC.) TO WHICH NEW UTILITIES WILL BE CONNECTED. CONTRACTOR SHALL INCLUDE FIELD MEASUREMENTS ON SUBMITTALS.

9. THE CONTRACTOR SHALL NOTIFY THE CO IN WRITING IMMEDIATELY IF CONFLICTS BETWEEN THE DRAWINGS AND ACTUAL CONDITIONS ARE DISCOVERED. THE CONTRACTOR SHALL ACCURATELY RECORD ANY SUCH CONFLICTS ON THE CONSTRUCTION DRAWINGS.

10. THE CONTRACTOR SHALL COORDINATE THE RELOCATION OF CONFLICTING UNDERGROUND UTILITIES AS NEEDED WITH THE CO.

11. THE CONTRACTOR SHALL PRESERVE AND MAINTAIN EXISTING UTILITIES, STRUCTURES, AND OTHER FEATURES WITHIN THE PROJECT AREA. ANY DAMAGE SHALL BE REPAIRED TO PRE–EXISITING CONDITIONS, BY AND AT THE EXPENSE OF THE CONTRACTOR, FOR APPROVAL OF THE CO.

12. THE CONTRACTOR IS RESPONSIBLE FOR BRACING, SHORING, OR PROVIDING OTHER MEANS NECESSARY TO PROTECT AND SUPPORT EXISTING UTILITIES, STRUCTURES, AND OTHER FEATURES (EXPOSED OR UNEXPOSED) THAT MAY BE IMPACTED BY HIS/HER WORK.

13. AT THE CONTRACTOR'S EXPENSE, THE CONTRACTOR SHALL RESTORE TO PRE–EXISTING CONDITIONS FOR APPROVAL OF THE CO ALL PAVING, STABILIZED EARTH, DRIVEWAYS, CURBS, SIDEWALKS, FENCES, SOD, LANDSCAPING, CULVERTS, ETC. THAT THE CONTRACTOR HAS DAMAGED DURING CONSTRUCTION. THIS INCLUDES ALL ASPHALT, CONCRETE, GRASS OR SOD REMOVAL NOT SPECIFICALLY IDENTIFIED ON THE DRAWINGS.

14. THE CONTRACTOR SHALL LAY PIPE TO UNIFORM GRADE BETWEEN INDICATED ELEVATION POINTS. CONTRACTOR SHALL TAKE CARE TO PROVIDE PROPER GRADE ELEVATIONS AND ALIGNMENTS.

15. SIZE OF FITTINGS SHOWN ON PLANS SHALL CORRESPOND TO ADJACENT STRAIGHT RUN OF PIPE UNLESS NOTED OTHERWISE. TYPE OF JOINT AND FITTING MATERIAL SHALL BE AS SPECIFIED UNLESS NOTED OTHERWISE.

16. PIPE HANGERS AND SUPPORTS ARE NOT SHOWN UNLESS A SPECIAL TYPE OR CONFIGURATION IS REQUIRED. FINAL SUPPORTS, LOCATIONS, AND TYPES SHALL BE DETERMINED BY THE CONTRACTOR AND INCLUDED IN THE PIPELINE DRAWING SUBMITTALS FOR REVIEW AND APPROVAL BY THE CO PRIOR TO INSTALLATION. MAXIMUM SPACING SHALL BE AS SPECIFIED.

17. ALL PRESSURIZED PIPE/FITTING JOINTS, FLEXIBLE CONNECTORS, FLANGED COUPLING ADAPTERS, ETC, SHALL BE RESTRAINED USING SPECIFIED RESTRAINT SYSTEM UNLESS NOTED OTHERWISE.

18. SYMBOLS, LEGENDS, AND PIPE USE IDENTIFICATIONS SHOWN SHALL BE FOLLOWED THROUGHOUT THE DRAWINGS, WHEREVER APPLICABLE. ALL OF THE VARIOUS PIPING APPLICATIONS ARE NOT NECESSARILY USED IN THE PROJECT. ALL BURIED AND EXPOSED PIPING SHALL BE PRESSURE TESTED AS SPECIFIED.

19. THE CONTRACTOR SHALL NOTIFY THE CO IN WRITING AT LEAST 14 FULL WORKING DAYS IN ADVANCE OF MAKING ANY CONNECTION TO THE WATER SYSTEM. ADDITIONALLY, THE CONTRACTOR SHALL OBTAIN WRITTEN AUTHORIZATION FROM THE CO A MINIMUM OF 14 WORKING DAYS PRIOR TO INTERRUPTING WATER, SEWER, COMMUNICATION, ELECTRICAL, OR OTHER UTILITY SERVICE.

20. THE CONTRACTOR SHALL MAKE ALL CONNECTIONS TO NEW AND EXISTING UTILITIES AS SHOWN ON THE DRAWINGS AND SHALL FURNISH ALL LABOR AND MATERIALS NECESSARY TO COMPLETE THE WORK.

21. NUMBER AND LOCATION OF UNIONS SHOWN ON DRAWINGS ARE ONLY APPROXIMATE. CONTRACTOR TO PROVIDE ALL UNIONS NECESSARY TO FACILITATE CONVENIENT REMOVAL OF VALVES AND MECHANICAL EQUIPMENT.

22. WHERE A FLANGED COUPLING ADAPTER IS SHOWN, A STANDARD FLANGE SHALL BE USED TO JOIN THE COUPLING ADAPTER.

23. ALL ANCHORS AND FASTENERS SHALL BE 316 STAINLESS STEEL UNLESS NOTED OTHERWISE. ALL PIPE/FITTING BOLT ASSEMBLIES SHALL BE CARBON STEEL AS SPECIFIED AND COATED AS SPECIFIED.

24. CONTRACTOR SHALL PROVIDE MEANS TO DEWATER SOILS FOR ALL CONSTRUCTION WORK INCLUDING WORK TO DRAIN, CLEAN, REHABILITATE, REPAIR OR MODIFY EXISTING OR CONSTRUCT NEW STRUCTURES OR UTILITIES.

25. FITTINGS MAY BE USED FOR PIPE ALIGNMENT CHANGES RATHER THAN DEFLECTING AT THE CONTRACTOR'S OPTION AND WITH NO ADDITIONAL COMPENSATION. ANYWHERE A FITTING CAN BE ROLLED AS AN OFFSET THE CONTRACTOR IS PERMITTED TO DO SO. WITH REGARDS TO THE UTILITY CONFLICTS, THE CONTRACTOR IS TO DEFLECT THE WATER MAIN TO CROSS THE UTILITY IF DEFLECTION CAN BE ACCOMPLISHED WITHIN 2 PIPE LENGTHS OF THE UTILITY. IF DEFLECTION IS NOT POSSIBLE THE CONTRACTOR MUST CROSS THE UTILITY IN ACCORDANCE WITH THE TYPICAL UTILITY CONFLICT DETAIL.

26. NOT ALL FITTINGS ARE SHOWN ON DRAWINGS. THE MINIMUM PIPE COVER MUST BE MAINTAINED. ADD FITTINGS FOR VERTICAL OFFSETS.

27. ALL DRAINAGE AREAS THAT ARE CROSSED BY PIPELINES SHALL NOT BE OBSTRUCTED EXCEPT FOR SHORT PERIODS AS MAY BE NECESSARY DURING ACTUAL CONSTRUCTION HOURS.

28. THE CONTRACTOR SHALL NOT PLACE ANY FILL MATERIAL WITHIN WETTED DITCH OR WETLAND AREAS, AND SHALL INSTALL SILTATION FENCES BETWEEN WORK AND SUCH AREAS WHEN WORKING ADJACENT TO EITHER TYPE OF AREA.

29. THE CONTRACTOR SHALL COMPLY WITH ALL CONDITIONS AND REQUIREMENTS OF ALL PERMITS OBTAINED FOR THIS PROJECT.

30. THIS PROJECT HAS THE POTENTIAL TO IMPACT THREATENED, ENDANGERED, AND PROTECTED SPECIES SUCH AS BUT NOT LIMITED TO THE GOPHER TORTOISE. THE CONTRACTOR SHALL CONTACT THE CO AND NASA ENVIRONMENTAL 14 DAYS PRIOR TO CONSTRUCTION ACTIVITIES IN ORDER FOR THE GOVERNMENT TO PERFORM SURVEY AND RELOCATION ACTIVITIES OF ANY IDENTIFIED SPECIES.

31. ALL MATERIALS, COATINGS, AND CHEMICALS THAT CONTACT RAW AND/OR DRINKING WATER SHALL BE IN CONFORMANCE WITH ANSI/NSF STANDARD 61.

32. ALL ROADWAY CROSSINGS FOR PIPE SIZES 4 INCHES IN DIAMETER OR SMALLER SHALL BE SLEEVED.

33. ALL EXPOSED CONCRETE SLABS SHALL HAVE CHAMFERED EDGES.

34. THE CONTRACTOR SHALL ADD A CAP OR RESTRAINED PLUG TO THE END OF ALL EXISTING LINES WHICH ARE TO REMAIN ACTIVE.

DRAWING INDEX

REV	INDEX	DRAWING	DESCRIPTION
A	1	V1	COVER SHEET
A	2	V2	DRAWING INDEX, GENERAL NOTES, AND ABBREVIATIONS
A	3	V3	DRAWING LEGENDS AND DESIGNATIONS
A	4	D1	W1 PUMP STATION DEMOLITION NOTES
A	5	D2	W1 PUMP STATION DEMOLITION PLAN
A	6	C1	W–1 PUMP STATION DEMOLITION PLAN
A	7	C2	W–1 PUMP STATION SITE PLAN
A	8	C3	W–1 PUMP STATION YARD PIPING PLAN
A	9	C4	YARD PIPING PLAN NORTHWEST
A	10	C5	CIVIL DETAILS
A	11	C6	CIVIL DETAILS
A	12	C7	CIVIL DETAILS
A	13	C8	CIVIL DETAILS
A	14	C9	CIVIL DETAILS
A	15	C10	STORMWATER POLLUTION PREVENTION DETAILS
A	16	A1	W–1 PUMP STATION BUILDING LIFE SAFETY PLAN AND REGULATORY DATA
A	17	A2	W–1 PUMP STATION BUILDING FLOOR PLAN
A	18	A3	W–1 PUMP STATION BUILDING ROOF PLAN
A	19	A4	W–1 PUMP STATION BUILDING ELEVATIONS
A	20	A5	W–1 PUMP STATION BUILDING ELEVATIONS
A	21	A6	W–1 PUMP STATION BUILDING SECTIONS
A	22	A7	W–1 PUMP STATION BUILDING SECTIONS
A	23	A8	W–1 PUMP STATION BUILDING EXTERIOR DETAILS
A	24	A9	W–1 PUMP STATION BUILDING REFLECTED CEILING PLAN
A	25	A10	W–1 PUMP STATION BUILDING SCHEDULES AND DETAILS
A	26	A11	W–1 PUMP STATION BUILDING DETAILS
A	27	S1	STRUCTURAL GENERAL NOTES AND ABBREVIATIONS
A	28	S2	W–1 PUMP STATION FOUNDATION AND FLOOR PLAN
A	29	S3	W–1 PUMP STATION ROOF FRAMING PLAN
A	30	S4	STRUCTURAL DETAILS
A	31	S5	STRUCTURAL DETAILS
A	32	S6	PIPE SUPPORT DETAILS
A	33	S7	STRUCTURAL DETAILS
A	34	M1	W–1 PUMP STATION PLAN
A	35	M2	W–1 PUMP STATION SECTIONS
A	36	M3	CHEMICAL STORAGE AREA SECTIONS
A	37	M4	MECHANICAL DETAILS
A	38	M5	MECHANICAL DETAILS
A	39	M6	MECHANICAL DETAILS
A	40	E1	ELECTRICAL LEGENDS
A	41	E2	ABBREVIATIONS AND GENERAL NOTES
A	42	E3	W–1 PUMP STATION ELECTRICAL PLAN
A	43	E4	ONE–LINE DIAGRAM
A	44	E5	W–1 PUMP STATION BUILDING POWER AND PROCESS ELECTRICAL PLAN
A	45	E6	W–1 PUMP STATION BUILDING LIGHTING AND RECEPTACLE PLAN
A	46	E7	W–1 PUMP STATION LIGHTNING PROTECTION & GROUNDING PLAN
A	47	E8	ELECTRICAL SCHEDULES
A	48	E9	ELECTRICAL SCHEDULES
A	49	E10	ELECTRICAL DETAILS
A	50	E11	ELECTRICAL DETAILS
A	51	E12	ELECTRICAL DETAILS
A	52	E13	ELECTRICAL DETAILS
A	53	E14	ELECTRICAL DETAILS
A	54	H1	HVAC LEGEND SHEET
A	55	H2	HVAC PLAN AND SCHEDULES
A	56	FA1	FIRE ALARM SYSTEM PLAN
A	57	FA2	FIRE ALARM RISER DIAGRAM
A	58	FP1	FIRE PROTECTION LEGEND AND NOTES
A	59	FP2	FIRE PROTECTION DETAILS
A	60	FP3	FIRE PROTECTION PLAN
A	61	I1	INSTRUMENTATION AND CONTROLS LEGEND SHEET 1 OF 2
A	62	I2	INSTRUMENTATION AND CONTROLS LEGEND SHEET 2 OF 2
A	63	I3	P&ID – W1 PUMP STATION
A	64	I4	P&ID – CHEMICAL FEED SYSTEMS
A	65	I5	SEQUENCE OF OPERATION W1 PUMP STATION
A	66	I6	PANEL DRAWINGS AND MOUNTING DETAILS
A	67	I7	DETAIL

GENERAL ABBREVIATIONS

AC	ASBESTOS CEMENT
AIP	ABANDONED IN PLACE
ALUM	ALUMINUM
APPROX	APPROXIMATE
ARV	AIR RELEASE VALVE
ASTM	AMERICAN SOCIETY FOR TESTING AND MATERIALS
AVE	AVENUE
AWWA	AMERICAN WATER WORKS ASSOCIATION
BF	BLIND FLANGE
BFP	BACKFLOW PREVENTER
BFV	BUTTERFLY VALVE
BLD	BLIND
BLDG	BUILDING
BM	BENCH MARK
BTM	BOTTOM
BTM/	BOTTOM OF
BV	BALL VALVE
BYP	BY–PASS
C/L, CL, ℄	CENTERLINE
CI	CAST IRON
CLF	CHAIN LINK FENCE
CLR	CLEARANCE
CO	CONTRACTING OFFICER
CONC	CONCRETE
CONST	CONSTRUCTION
CONT	CONTINUOUS
CV	CHECK VALVE
DET	DETAIL
DI	DUCTILE IRON
DIA	DIAMETER
DIP	DUCTILE IRON PIPE
DWG	DRAWING
EA	EACH
ECC	ECCENTRIC
ELB	ELBOW
ELEC	ELECTRICAL
EL, ELEV	ELEVATION
EOP	EDGE OF PAVEMENT
EQ	EQUALLY
EST	ELEVATED STORAGE TANK
EW	EACH WAY
EXIST	EXISTING
FAB	FABRICATED
FAC	FLORIDA ADMINISTRATIVE CODE
FCA	FLANGED COUPLING ADAPTER
FCV	FLOW CONTROL VALVE
FDEP	FLORIDA DEPARTMENT OF ENVIRONMENTAL PROTECTION
FDOT	FLORIDA DEPARTMENT OF TRANSPORTATION
FFE	FINISHED FLOOR ELEVATION
FH	FIRE HYDRANT
FIG	FIGURE
FIN	FINISHED
FJ	FLANGED JOINT
FL	FLOOR
FLEX	FLEXIBLE
FLG	FLANGE(D)
FM	FORCE MAIN
FT	FOOT
GFE	GOVERNMENT FINISHED EQUIPMENT
GPM	GALLONS PER MINUTE
GR	GRADE
GS	GALVANIZED STEEL
GV	GATE VALVE
HDD	HORIZONTAL DIRECTIONAL DRILL
HDPE	HIGH DENSITY POLYETHYLENE
HP	HORSEPOWER
HORIZ	HORIZONTAL
HSP	HIGH SERVICE PUMP
HT	HEIGHT
IA	INDUSTRIAL AREA
ID	INSIDE DIAMETER
IE	INVERT ELEVATION
IPS	IRON PIPE SIZE
JT	JOINT
KCCS	KENNEDY COMPLEX CONTROL SYSTEM
KSC	KENNEDY SPACE CENTER
LBS	POUNDS
LC	LAUNCH COMPLEX
LF	LINEAR FEET
LG	LONG
MAX	MAXIMUM
MECH	MECHANICAL
MFR	MANUFACTURER
MH	MANHOLE
MIN	MINIMUM
MISC	MISCELLANEOUS
MJ	MECHANICAL JOINT
N	NORTHING
N/A	NOT APPLICABLE
NAD	NORTH AMERICAN DATUM
NASA	NATIONAL AERONAUTICS AND SPACE ADMINISTRATION
NAVD	NORTH AMERICAN VERTICAL DATUM
NIC	NOT IN CONTRACT
NC	NORMALLY CLOSED
NO., #	NUMBER
NOM	NOMINAL
NPT	NATIONAL PIPE TAPER
NTS	NOT TO SCALE
OC	ON CENTER
OD	OUTSIDE DIAMETER
OSHA	OCCUPATIONAL SAFETY AND HEALTH ADMINISTRATION
PCB	POLYCHLORINATED BIPHENYLS
PCV	PRESSURE CONTROL VALVE
PE	PLAIN END
PET	POLYETHYLENE TUBING
PID	PROPORTIONAL INTEGRAL DERIVATIVE
PIV	POST INDICATOR VALVE
PLC	PROGRAMMABLE LOGIC CONTROLLER
POJ	PUSH ON JOINT
PPE	PERSONAL PROTECTIVE EQUIPMENT
PRL	POTENTIAL RELEASE LOCATION
PSI	POUNDS PER SQUARE INCH
PSIG	POUNDS PER SQUARE INCH GAUGE
PVC	POLYVINYL CHLORIDE
PVMT	PAVEMENT
PWS	POTABLE WATER SERVICE
RCP	REINFORCED CONCRETE PIPE
RED	REDUCER
REINF	REINFORCED
REQ'D	REQUIRED
RJ	RESTRAINED JOINT
RMJ	RESTRAINED MECHANICAL JOINT
RPOJ	RESTRAINED PUSH ON JOINT
RPZ	REDUCED PRESSURE ZONE
R/W	RIGHT OF WAY
SCH	SCHEDULE
STD	STANDARD
SE	SOUTH EAST
SQ	SQUARE
SR	STATE ROAD
SS, SST	STAINLESS STEEL
STL	STEEL
SWD	SIDE WATER DEPTH
SWMU	SOLID WASTE MANAGEMENT UNIT
SWJ	SOLVENT WELD JOINT
T/	TOP OF
T	THICK
TOC	TOP OF CONCRETE
THD	THREADED
TRP	TECHNICAL RESPONSE PACKET
TYP	TYPICAL
UG	UNDERGROUND
UNO	UNLESS NOTED OTHERWISE
VAB	VEHICLE ASSEMBLY BUILDING
VIC	VISITOR INFORMATION CENTER
W/	WITH
W	WIDE
WDS	WATER DISTRIBUTION SYSTEM
WM	WATER MAIN
WS	WELDED STEEL
WT	WEIGHT

NOTE:
A. THIS IS A STANDARD ABBREVIATION LIST. SOME ABBREVIATIONS MAY APPEAR ON THIS LIST AND NOT IN THE DRAWING.

THIS SPACE RESERVED

SYM	ZONE	DESCRIPTION	DATE	APPROVED
A		ADDED SHEET – INITIAL RELEASE TO EOC	12/05/11	KM

REVISIONS

THIS DRAWING CREATED IN AUTOCAD 2010 FILE FORMAT AND WILL BE REVISED ONLY ON AN AUTOCAD SYSTEM. FILE: 14000189–DP5–V02.DWG

JONES EDMUNDS
730 NE WALDO ROAD, GAINESVILLE, FLORIDA 32641 / (352) 377-5821
3910 S WASHINGTON AVE, SUITE 210, TITUSVILLE, FLORIDA 32780 / (321) 269-2950

SIGNATURES	DATE
DRAWN J. ALLEN	12/05/11
CHECKED R. BEST	12/05/11
SUBMITTED M. CLARK	12/05/11
ST of LICENSURE: FL LICENSE NO: 48898	
APPROVED M. CLARK	12/5/11
K. MILLER	12/5/11

NATIONAL AERONAUTICS AND SPACE ADMINISTRATION
JOHN F. KENNEDY SPACE CENTER, NASA
KENNEDY SPACE CENTER, FLORIDA

REVITALIZE WATER & WASTEWATER SYSTEMS - VOLUME 5 OF 5
W1 PUMP STATION REPLACEMENT

DRAWING INDEX, GENERAL NOTES, AND ABBREVIATIONS

FILE NO.	SIZE	DWG. NO.	REV
	F	79K38877 VOL 5	A

PROJ. NO. 96968.3 SHEET 2

V2

NOTICE: When Government drawings, specifications, or other data are used for any purpose other than in connection with a definitely related Government procurement operation, the United States Government thereby incurs no responsibility nor obligation whatsoever; and the fact that the Government may have formulated, furnished, or in any way supplied the said drawings, specifications or other data is not to be regarded by implication or otherwise as in any manner licensing the holder or any other person or corporation, or conveying any rights or permission to manufacture, use, or sell any patented invention that may in any way be related thereto.

SPECIFICATION REFERENCE NO 79K38878

CIVIL LEGEND

- ASPHALT RESTORATION
- CONCRETE RESTORATION
- AREA TO BE DEMOLISHED
- CONCRETE SIDEWALK RESTORATION
- ASPHALT PAVEMENT RESTORATION WITH SLEEVED PIPE
- ASPHALT MILLING AND RESURFACING
- WM — WATER MAIN
- 100 — COORDINATE POINT
- BO — BLOW OFF
- BOLLARD
- BSP — BACTERIOLOGICAL SAMPLE POINT
- UTILITY CONFLICT AREA – WATER MAIN
- SPT BORING LOCATION
- FULLY GROUTED ABANDONED WATER MAIN
- STEEL FENCE
- CHAIN LINK FENCE

PIPING SYMBOLS

DOUBLE LINE	SINGLE LINE	
		EXISTING PIPE
		NEW PIPE (ABOVE GRADE)
		NEW PIPE (BELOW GRADE)
		EXISTING PIPE TO BE REMOVED
		FLANGED JOINT
		MECHANICAL JOINT OR RESTRAINED PUSH–ON JOINT
		FLEXIBLE COUPLING ADAPTER
		HUB & SPIGOT JOINT
		FLANGED COUPLING ADAPTER W/ THRUST TIES
		FLEXIBLE COUPLING WITH THRUST TIES
		BLIND FLANGE
		90° ELBOW UP
		90° ELBOW DOWN
		TEE UP
		TEE DOWN
		FLANGED COUPLING ADAPTER
		PUMP EXPANSION COUPLING

MECHANICAL LEGEND

DOUBLE LINE	SINGLE LINE	
		ELBOW UP
		ELBOW DOWN
		CONCENTRIC REDUCER
		ECCENTRIC REDUCER
		UNION
		CAP
		TEE
		TEE W/ RESTRAINED PLUG
		ELBOW, 90 DEGREE
		ELBOW, 45 DEGREE
		ELBOW, 22.5 DEGREE
		ELBOW, 11.25 DEGREE
		ABANDON IN PLACE
		SLEEVE
		TEMPORARY LINE STOP

VALVE SYMBOLS

DOUBLE LINE	SINGLE LINE	
		GATE
OR		BUTTERFLY
		BALL
		CHECK
OR		PRESSURE CONTROL
		AIR RELEASE AND/OR VACUUM RELIEF
		PRESSURE SAFETY RELEASE VALVE
	NV–01–12	TYPICAL VALVE IDENTIFICATION NUMBER
		BACK FLOW PREVENTER

NOTES

A. THIS IS A STANDARD LEGEND SHEET. SOME SYMBOLS MAY APPEAR ON THE LEGEND AND NOT ON THE DRAWINGS.

B. EXISTING PIPE, EQUIPMENT, AND FEATURES ARE SHOWN LIGHT–LINED AND/OR SCREENED. PROPOSED PIPE AND EQUIPMENT IS SHOWN HEAVY–LINED OR BOLD.

SURVEY LEGEND

- = BACK–FLOW PREVENTER
- = BOLLARD
- = CURB INLET, STORM GRATE
- = CONCRETE LIGHT POLE
- = CLEAN–OUT (SANITARY)
- = CONCRETE POWER POLE
- = ELECTRIC MARKER
- = ELECTRIC BOX
- = ELECTRIC HANDHOLE
- = ELECTRIC METER
- = ELECTRIC MANHOLE
- = ELECTRIC TRANSFORMER
- = FIRE DEPARTMENT CONNECTION
- = FIRE METER
- = FIBER OPTIC CABLE MARKER
- = FIBER OPTIC CABLE HANDHOLE
- = GAS MARKER
- = GAS METER
- = GUY
- = GAS VALVE
- = HYDRANT
- = INDICATOR VALVE
- = LIGHT POLE
- = MANHOLE, UNKNOWN
- = MANHOLE, SANITARY SEWER
- = MANHOLE, STORM SEWER
- = MONITORING WELL
- = STORM GRATE
- = SIGN
- = SEWER VALVE
- = SPRINKLER HEAD
- = TELEPHONE HANDHOLE
- = TELEPHONE BOX
- = TELEPHONE MARKER
- = TELEPHONE MANHOLE
- = TELEPHONE PEDESTAL
- = TRAFFIC SIGNAL BOX
- = TRAFFIC SIGNAL
- = WATER METER
- = WATER SPIGOT
- = WATER VALVE
- = WELL
- = WOOD POWER POLE
- = SOFT DIG
- = CONCRETE
- = FENCELINE
- = TREELINE
- UGTV — = UNDERGROUND CABLE TV
- UGE — = UNDERGROUND ELECTRIC
- FOC — = UNDERGROUND FIBER OPTIC CABLE
- = UNDERGROUND UNKNOWN UTILITY
- GAS — = UNDERGROUND GAS
- = RAILROAD
- SAN — = SANITARY SEWER
- SFM — = SANITARY FORCEMAIN
- = SITE FEATURE
- STM — = STEAMLINE
- = STORM SEWER
- UGW — = UNDERGROUND WATER
- UGCW — = UNDERGROUND CHILLED WATER
- OHE — = OVERHEAD ELECTRIC
- COM — = COMMUNICATIONS

DESIGNATIONS

A / A1|A1 — DIRECTION OF SECTION; SECTION DESIGNATION; DRAWING NUMBER SECTION APPEARS ON; DRAWING NUMBER SECTION IS CUT ON

SECTION DESIGNATION

3 / C1|C26 — DETAIL DESIGNATION; DRAWING NUMBER DETAIL APPEARS ON; DRAWING NUMBER DETAIL IS REFERENCED ON

● INDICATES DETAIL IS REFERENCED ON MORE THAN ONE DRAWING

DETAIL DESIGNATION

A A — DIRECTION OF SECTION

INDICATES ONE OR MORE SECTIONS CUT AND SHOWN ON THE SAME DETAIL

SECTION DESIGNATION

THIS SPACE RESERVED

SYM	ZONE	DESCRIPTION	DATE	APPROVED
A		ADDED SHEET– INITIAL RELEASE TO EDC	12/05/11	KM

REVISIONS

THIS DRAWING CREATED IN AUTOCAD 2010 FILE FORMAT AND WILL BE REVISED ONLY ON AN AUTOCAD SYSTEM. FILE: 14000189–DP5–V03.DWG

JONES EDMUNDS
730 NE WALDO ROAD, GAINESVILLE, FLORIDA 32641 / (352) 377-5821
3910 S WASHINGTON AVE, SUITE 210, TITUSVILLE, FLORIDA 32780 / (321) 269-2950

SIGNATURES	DATE
DRAWN J. ALLEN	12/05/11
CHECKED R. BEST	12/05/11
SUBMITTED M. CLARK	12/05/11
ST of LICENSURE: FL LICENSE NO: 48898	
APPROVED G. CLARK	12/5/11
K. MILLER	12/5/11

NATIONAL AERONAUTICS AND SPACE ADMINISTRATION
JOHN F. KENNEDY SPACE CENTER, NASA
KENNEDY SPACE CENTER, FLORIDA

REVITALIZE WATER & WASTEWATER SYSTEMS - VOLUME 5 OF 5
W1 PUMP STATION REPLACEMENT

DRAWING LEGENDS AND DESIGNATIONS

FILE NO.	SIZE	DWG. NO.	REV
	F	79K38877 VOL 5	A

PROJ. NO. 96968.3 SHEET 3

V3

NOTICE: When Government drawings, specifications, or other data are used for any purpose other than in connection with a definitely related Government procurement operation, the United States Government thereby incurs no responsibility nor obligation whatsoever; and the fact that the Government may have formulated, furnished, or in any way supplied the said drawings, specifications or other data is not to be regarded by implication or otherwise as in any manner licensing the holder or any other person or corporation, or conveying any rights or permission to manufacture, use, or sell any patented invention that may in any way be related thereto.

GENERAL DEMOLITION NOTES

1. COORDINATE WITH CO FOR POWER SYSTEM ISOLATION LOCKOUT, TAGOUT AND DEMOLITION.
2. THE CONTRACTOR SHALL NOTE THAT ALL OVERHEAD AND UNDERGROUND UTILITIES MAY NOT BE SHOWN ON THE DRAWINGS. THE CONTRACTOR SHALL FIELD LOCATE AND INCLUDE CONSIDERATION OF SUCH UTILITIES PRIOR TO BIDDING AND PRIOR TO EXECUTION OF WORK.
3. THE CONTRACTOR IS SOLELY RESPONSIBLE FOR VERIFYING DIMENSIONS AND DETERMINING ALL MATERIAL QUANTITIES.
4. CONTRACTOR SHALL NOT COMMENCE DEMOLITION WORK UNTIL ALL UTILITIES HAVE BEEN VERIFIED TO BE DISCONNECTED AND ISOLATED. IF NECESSARY, THE CONTRACTOR SHALL NOTIFY THE CO 30 DAYS PRIOR TO ANY DEMOLITION TO ALLOW FOR ICS CONTRACTORS TO RELOCATE COMMUNICATION LINES AND EQUIPMENT. THE CONTRACTOR SHALL NOT DEMOLISH ANY ELECTRICAL EQUIPMENT UNTIL IT HAS BEEN DE-ENERGIZED COMPLETELY, DISCONNECTED AT ALL POSSIBLE SOURCES, AND VERIFIED DE-ENERGIZED AT THE EQUIPMENT WITH THE PROPER ELECTRICAL TEST EQUIPMENT.
5. THE CONTRACTOR SHALL NOTIFY THE CO IN WRITING AT LEAST 14 DAYS IN ADVANCE OF DISCONNECTING ANY ACTIVE SYSTEM. THE CONTRACTOR SHALL PROVIDE THE CO A SCHEDULE AND SEQUENCE PLAN PRIOR TO COMMENCING WORK.
6. THE CONTRACTOR SHALL PROVIDE CONTROL AND MAINTENANCE OF TRAFFIC IN ACCORDANCE WITH FDOT INDEX 600 THROUGH 665.
7. FDOT INDICES SHALL REFER TO THE "2010 FLORIDA DEPARTMENT OF TRANSPORTATION ROADWAY AND TRAFFIC DESIGN STANDARDS." FDOT SPECIFICATIONS SHALL REFER TO THE "2010 FLORIDA DEPARTMENT OF TRANSPORTATION STANDARD SPECIFICATIONS FOR ROAD AND BRIDGE CONSTRUCTION."
8. ITEMS IDENTIFIED TO BE SALVAGED AND RETURNED TO THE GOVERNMENT SHALL BE REMOVED CAREFULLY IN ORDER TO MAINTAIN THEIR CONDITION FOR FUTURE USE.
9. CONTRACTOR SHALL NOT CLOSE OR OBSTRUCT STREETS, WALKS, OR OTHER ADJACENT OCCUPIED OR IN-USE FACILITIES WITHOUT PERMISSION FROM THE CO. PROVIDE ALTERNATE ROUTES AROUND CLOSED OR OBSTRUCTED TRAFFIC WAYS.
10. CONTRACTOR SHALL CONDUCT DEMOLITION OPERATIONS AND DEBRIS REMOVAL WITH MINIMAL INTERFERENCE TO ROADS, STREETS, WALKS, AND OTHER ADJACENT OCCUPIED AND IN-USE FACILITIES.
11. CONTRACTOR SHALL ERECT AND MAINTAIN A MINIMUM 4-FOOT TALL CONSTRUCTION BARRIER AT SITE TO LIMIT ACCESS TO THE CONSTRUCTION SITE. THE CONSTRUCTION FENCE SHALL BE INSTALLED PRIOR TO ANY DEMOLITION ACTIVITIES.
12. FACILITIES AND IMPROVEMENTS TO REMAIN SHALL BE CLEANED OF DUST, DIRT, AND DEBRIS CAUSED BY DEMOLITION OPERATIONS. THE CONTRACTOR SHALL RETURN ADJACENT AREAS TO PRE-CONSTRUCTION CONDITIONS.
13. REMOVAL, DEMOLITION, STORAGE, HAULING AND DISPOSAL SHALL COMPLY WITH REGULATIONS BY FDEP, RCRA, TSCA, OSHA, EPA, FDOT AND ANY OTHER AUTHORITY HAVING JURISDICTION.
14. CONTRACTOR IS REQUIRED TO POLICE WORK AREAS DAILY FOR LOOSE TRASH AND DEBRIS. WIND BLOWN DEBRIS MUST BE COLLECTED DAILY AND PROPERLY DISPOSED TO PREVENT MIGRATION OF DEBRIS/TRASH OFFSITE.
15. BACKFILL AND COMPACTION WORK SHALL PROVIDE THE MINIMUM SLOPE TO DRAIN PROPERLY. PONDING OF WATER SHALL BE AVOIDED.
16. IF DURING DEMOLITION THE CONTRACTOR ENCOUNTERS MATERIALS OR SUBSTANCES NOT IDENTIFIED IN CONTRACT DOCUMENTS, THE CONTRACTOR SHALL IMMEDIATELY REPORT THESE MATERIALS TO THE CO AND PROCEED AS DIRECTED BY THE CO.
17. ALL EXISTING STORMWATER DRAINAGE PATTERNS AND CHANNELS SHALL BE MAINTAINED. THE CONTRACTOR SHALL NOTIFY THE CO IF THE WORK APPEARS TO INTERRUPT AN EXISTING STORMWATER DRAINAGE PATTERN. THE CONTRACTOR SHALL BE RESPONSIBLE FOR RESTORING ANY EROSION, SEDIMENT TRANSPORT, DISTURBED FOUNDATIONS AND IMPACT TO STRUCTURES, AND ANY OTHER DAMAGE TO CHANNELS AND DRAINAGE PATTERNS CAUSED DURING DEMOLITION.
18. ALL CONSTRUCTION AND DEMOLITION DEBRIS SHALL BE REMOVED FROM THE SITE AND DISPOSED BY THE CONTRACTOR IN ACCORDANCE WITH FEDERAL AND STATE REGULATIONS AND NASA KSC POLICY.
19. CONTRACTOR SHALL FILL ALL DISTURBED AREAS TO EXISTING ELEVATIONS, GRADE THE SITE LEVEL, AND SOD ALL DISTURBED AREAS.
20. ALL DEMOLITION DEBRIS SHALL BE REMOVED FROM THE SITE PERIMETER WITHIN 3 DAYS OF DEMOLITION.
21. THE CONTRACTOR SHALL HAND EXCAVATE ALL EXISTING UNDERGROUND DISCONNECTION POINTS TO DETERMINE THE LOCATION, MATERIAL, SIZE, JOINT LOCATION AND TYPE.
22. FUEL PIPING, DAY TANK AND CHEMICAL TANKS REMOVED SHALL BE CLEANED BY TRIPLE RINSING WITH WATER PRIOR TO SALVAGE OR DELIVERY TO DISPOSAL SITE. RINSE WATER SHALL BE CONTAINERIZED IN 55 GALLON DRUMS PROVIDED BY AND DISPOSED OF BY THE GOVERNMENT.
23. REQUIREMENTS FOR "HOT" PERMITS AND FIRE WATCHES ARE LOCATED IN THE CONTRACT DOCUMENTS SAFETY PLAN.
24. DELIVER DIESEL ENGINE AND ACCESSORIES (BATTERY CHARGER AND 24 VDC PANEL) TO RANSOM ROAD SALVAGE FACILITY FOR GOVERNMENT DISPOSITION.
25. ALL ELECTRICAL WORK SHALL BE IN ACCORDANCE WITH 2011 NATIONAL ELECTRICAL CODE.
26. REFER TO 79K36173 FOR EXISTING W1 PUMP STATION FACILITY INFORMATION.

ENVIRONMENTAL NOTES

1. HEAVY METALS IN PAINT AND MATERIALS ARE ASSUMED ON THE FACILITIES AND ITEMS TO BE DEMOLISHED. CONCENTRATIONS ARE LOW ENOUGH IN RELATION TO OVERALL WEIGHT OF THE STRUCTURE THAT THE GOVERNMENT WILL ALLOW THE DISPOSAL OF THE CONSTRUCTION AND DEMOLITION DEBRIS FROM THE STRUCTURE AT THE GOVERNMENT OWNED KSC CLASS III LANDFILL SUBJECT TO THE REQUIREMENTS OF THE CONTRACT DOCUMENTS. RECYCLING IS PERMITTED AND SHALL BE IN ACCORDANCE WITH APPLICABLE STATE AND FEDERAL REQUIREMENTS AND NASA KSC CONTRACT CLAUSES.
2. THIS PROJECT HAS THE POTENTIAL TO IMPACT THREATENED, ENDANGERED, AND PROTECTED SPECIES. THE CONTRACTOR SHALL CONTACT THE CONTRACTING OFFICER AND NASA ENVIRONMENTAL 14 DAYS PRIOR TO DEMOLITION IN ORDER FOR THE GOVERNMENT TO PERFORM A BIOLOGICAL SURVEY.
3. PAINTED MATERIALS SHALL BE ASSUMED TO BE PCB BULK PRODUCT WASTE AND SHALL BE DISPOSED OF AT THE KSC CLASS III LANDFILL.
4. UNPAINTED METALS AND CONCRETE SHALL BE RECYCLED IN ACCORDANCE WITH KSC CONTRACT CLAUSES, AND STATE AND FEDERAL REQUIREMENTS.
5. DEMOLITION WORK SHALL INCLUDE ABATEMENT OF ASBESTOS CONTAINING MATERIALS (ACM) WHERE ENCOUNTERED DURING CONSTRUCTION. REFER TO THE ASBESTOS SCHEDULE FOR LOCATIONS OF ASBESTOS CONTAINING MATERIALS. ABATEMENT SHALL BE IN ACCORDANCE WITH KSC CONTRACT CLAUSE "ASBESTOS ABATEMENT".
6. CONTRACTOR SHALL SUBMIT TO FLORIDA DEPARTMENT OF ENVIRONMENTAL PROTECTION (FDEP) A "NOTICE OF ASBESTOS RENOVATION OR DEMOLITION" FORM (www.dep.state.fl.us/air/forms.html. DEP FORM 62-257.900(1)) 10 DAYS PRIOR TO DEMOLITION AND/OR DISTURBANCE OF ACM. THE CONTRACTING OFFICER SHALL BE COPIED ON ALL REPORTS SUBMITTED TO FDEP. THIS FORM SHALL BE SUBMITTED FOR ASBESTOS DISTURBANCE AS WELL AS DEMOLITION OF ANY LOAD SUPPORTING STRUCTURAL MEMBER OF A FACILITY REGARDLESS OF FACILITY SIZE.
7. ANY ADDITIONAL ACM ENCOUNTERED, NOT REPORTED IN THE ASBESTOS SURVEY, SHALL BE REPORTED TO THE CONTRACTING OFFICER IMMEDIATELY FOLLOWING DISCOVERY. NO ADDITIONAL ACM ABATEMENT SHALL BE PERFORMED WITHOUT WRITTEN AUTHORIZATION FROM THE CONTRACTING OFFICER.
8. NON-FRIABLE ASBESTOS WILL BE ACCEPTED AT THE KSC CLASS III LANDFILL UPON DETERMINATION USING KSC FORM 28-1024 AND SIGNED BY THE NASA ENVIRONMENTAL BRANCH CHIEF. A RECEIPT OF DISPOSAL SHALL BE COPIED TO THE CONTRACTING OFFICER. DISPOSAL OF ALL FRIABLE ACM DEMOLITION DEBRIS SHALL BE AT THE BREVARD COUNTY LANDFILL LOCATED ON ADAMSON ROAD IN COCOA, FL. THE CONTRACTOR SHALL NOTIFY THE KSC CLASS III AND BREVARD COUNTY LANDFILLS 24 HOURS IN ADVANCE OF DELIVERY OF ASBESTOS CONTAINING MATERIALS.
9. ITEMS SHOWN IN THE ASBESTOS COLUMN OF THE SCHEDULES AS "YES*" HAVE BEEN ASSUMED TO CONTAIN ASBESTOS DUE TO THE HAZARDS AND CRITICAL NATURE ASSOCIATED WITH THE SYSTEM. THE CONTRACTOR SHALL ASSUME THESE ITEMS ARE POSITIVE FOR ASBESTOS. THE CONTRACTOR HAS THE OPTION TO SAMPLE MATERIAL BEFORE DEMOLITION BEGINS IN ORDER TO MINIMIZE THE DEMOLITION SCHEDULE.

W-1 PUMP STATION ASBESTOS TABLE

ROOM NUMBER	MATERIAL TYPE	ASBESTOS	FRIABLE	CONDITION	QUANTITY	UNIT	LOCATION	COMMENTS	REPORT BY
00100	FLOOR COVERING (OTHER)	YES	NO	GOOD	00350	SF	FLOOR	SOFT BLACK FLOOR SEAL	JONES EDMUNDS
00100	MISCELLANEOUS MATERIAL (CAULK)	YES	NO	GOOD	00150	LF	WALLS	OFF-WHITE HARD CAULK	JONES EDMUNDS
00100	MISCELLANEOUS MATERIAL (CAULK)	YES	NO	GOOD	00012	LF	WALLS	GRAY HARD CAULK	JONES EDMUNDS
00100	MISCELLANEOUS MATERIAL (PUTTY)	NO	NO	GOOD	00001	SF	WALLS	SOFT GRAY PUTTY	JONES EDMUNDS
00100	MISCELLANEOUS MATERIAL (FOAM)	NO	YES	GOOD	00005	SF	WALLS	FOAM AROUND PIPE PENETRATION	JONES EDMUNDS
00102	FLOOR COVERING (OTHER)	YES	NO	GOOD	00015	SF	FLOOR	SOFT BLACK FLOOR SEAL	JONES EDMUNDS
00102	MISCELLANEOUS MATERIAL (CAULK)	YES	NO	GOOD	00020	LF	WALLS	OFF-WHITE HARD CAULK	JONES EDMUNDS
00102	MISCELLANEOUS MATERIAL (PUTTY)	NO	NO	GOOD	00001	SF	WALLS	SOFT GRAY PUTTY	JONES EDMUNDS
EXTERIOR	MISCELLANEOUS MATERIAL (CAULK)	YES*	NO	GOOD	00025	LF	WALLS	WHITE CAULK ON WALL PENETRATIONS	JONES EDMUNDS
EXTERIOR	ROOFING (CORE)	YES*	NO	GOOD	01250	SF	ROOF	MAIN BUILT-UP ROOF CORE	JONES EDMUNDS
EXTERIOR	ROOFING (FLASHING)	YES*	NO	GOOD	00010	EA	ROOF	BUILT-UP ROOF/FLASHING (AROUND VENTS)	JONES EDMUNDS
EXTERIOR	ROOFING (OTHER)	YES*	NO	GOOD	00010	EA	ROOF	BUILT-UP ROOF/MASTIC (MASTIC UNDER LIGHTNING PROTECTION SYSTEM)	JONES EDMUNDS
INTERIOR / EXTERIOR	MISCELLANEOUS MATERIAL (GASKETS)	YES*	NO	GOOD	00060	EA	PIPING	VARIOUS DIAMETER GASKETS ON ABOVE GROUND AND HIDDEN UNDERGROUND PIPING	JONES EDMUNDS

THIS SPACE RESERVED

SYM	ZONE	DESCRIPTION	DATE	APPROVED
A		ADDED SHEET - INITIAL RELEASE TO EDC	12/05/11	KM

REVISIONS

THIS DRAWING CREATED IN AUTOCAD 2010 FILE FORMAT AND WILL BE REVISED ONLY ON AN AUTOCAD SYSTEM. FILE: 14000189-DP5-D01.DWG

JONES EDMUNDS
730 NE WALDO ROAD, GAINESVILLE, FLORIDA 32641 / (352) 377-5821
3910 S WASHINGTON AVE, SUITE 210, TITUSVILLE, FLORIDA 32780 / (321) 269-2950

SIGNATURES	DATE
DRAWN J. ALLEN	12/05/11
CHECKED D. TOTH	12/05/11
SUBMITTED K. RIVERA	12/05/11
ST of LICENSURE: FL LICENSE NO: 65681	
APPROVED K. CLARK	12/05/11
K. MILLER	12/5/11

NATIONAL AERONAUTICS AND SPACE ADMINISTRATION
JOHN F. KENNEDY SPACE CENTER, NASA
KENNEDY SPACE CENTER, FLORIDA

REVITALIZE WATER & WASTEWATER SYSTEMS - VOLUME 5 OF 5
W1 PUMP STATION REPLACEMENT

W1 PUMP STATION DEMOLITION NOTES

FILE NO.	SIZE	DWG. NO.	REV
	F	79K38877 VOL 5	A

PROJ. NO. 96968.3 SHEET 4

D1

NOTICE: When Government drawings, specifications, or other data are used for any purpose other than in connection with a definitely related Government procurement operation, the United States Government thereby incurs no responsibility nor obligation whatsoever; and the fact that the Government may have formulated, furnished, or in any way supplied the said drawings, specifications or other data is not to be regarded by implication or otherwise as in any manner licensing the holder or any other person or corporation, or conveying any rights or permission to manufacture, use, or sell any patented invention that may in any way be related thereto.

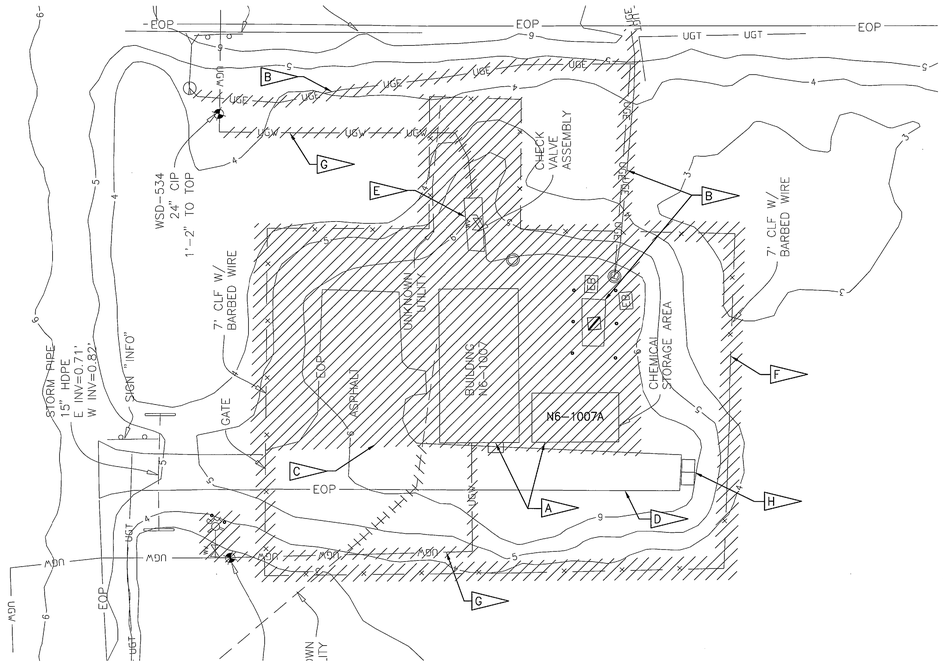

W1 PUMP STATION DEMOLITION PLAN

1"=20'

GRAPHIC SCALE

0 10 20 40

SCALE IN FEET
1"=20'

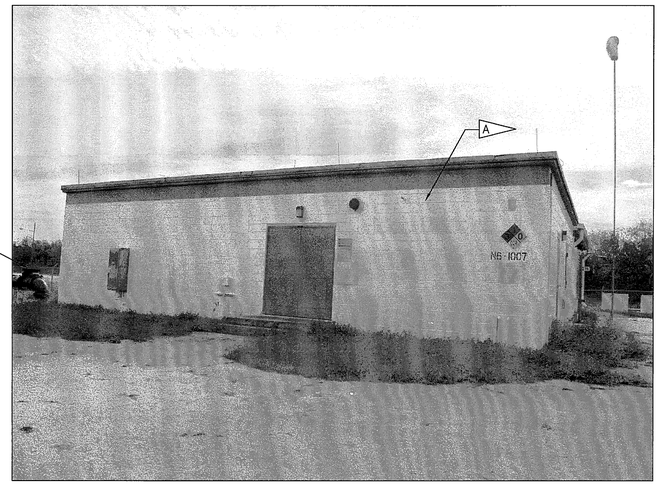

N6-1007 W1 PUMP STATION PHOTO

NTS

SPECIFIC NOTES

A — DEMOLISH W-1 PUMP STATION (N6-1007 AND N6-1007A), FOUNDATIONS AND ASSOCIATED APPURTENANCES, CHEMICAL STORAGE TANKS AND FEED EQUIPMENT, CONCRETE SLAB, PIPE TRENCH, AND ASSOCIATED SUPPORTS. 1 D2/D2 2 D2/D2 3 D2/D2

B — THE CONTRACTOR SHALL DEMOLISH ALL ELECTRICAL EQUIPMENT AT EXISTING W-1 PUMP STATION INCLUDING ALL CONDUCTORS AND CONDUIT, BOLLARDS AND TRANSFORMERS. TRANSFORMERS SHALL BE HANDED OVER TO THE CO. SEE E3 FOR DETAILS.

C — SAW-CUT AND REMOVE EXISTING ASPHALT PAVEMENT.

D — EXISTING ASPHALT DRIVE TO COMMUNICATION PANELS TO REMAIN. CONTRACTOR TO PROTECT ASPHALT FROM DAMAGE DURING DEMOLITION WORK.

E — DEMOLISH ABOVE GRADE 16" CHECK VALVE ASSEMBLY.

F — DEMOLISH EXISTING 6' CHAIN LINK FENCE AND GATE.

G — DEMOLISH EXISTING WATER MAIN. SEE SHEET C4 FOR LIMITS OF DEMOLITION

H — EXISTING FIBER OPTIC DISTRIBUTOR TO REMAIN.

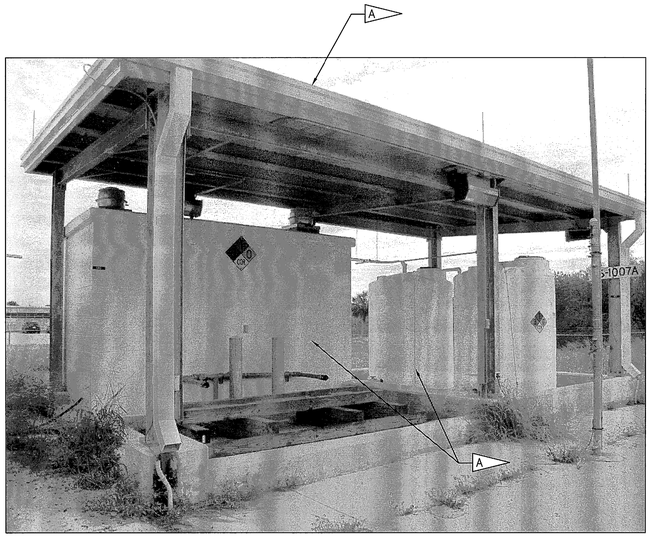

N6-1007A W1 PUMP STATION PHOTO

NTS

N6-1007 W1 PUMP STATION INTERIOR PHOTO

NTS

THIS SPACE RESERVED

SYM	ZONE	DESCRIPTION	DATE	APPROVED
A		ADDED SHEET - INITIAL RELEASE TO EPL	12/05/11	KM

REVISIONS

THIS DRAWING CREATED IN AUTOCAD 2010 FILE FORMAT AND WILL BE REVISED ONLY ON AN AUTOCAD SYSTEM. FILE: 14000189-DP5-D02.DWG

JONES EDMUNDS

730 NE WALDO ROAD, GAINESVILLE, FLORIDA 32641 / (352) 377-5821
3910 S WASHINGTON AVE, SUITE 210, TITUSVILLE, FLORIDA 32780 / (321) 269-2950

SIGNATURES	DATE
DRAWN J. ALLEN	12/05/11
CHECKED D. TOTH	12/05/11
SUBMITTED K. RIVERA	12/05/11
ST of LICENSURE: FL LICENSE NO: 65681	
APPROVED M. CLARK	12/05/11
K. MILLER	12/5/11

NATIONAL AERONAUTICS AND SPACE ADMINISTRATION
JOHN F. KENNEDY SPACE CENTER, NASA
KENNEDY SPACE CENTER, FLORIDA

REVITALIZE WATER & WASTEWATER SYSTEMS - VOLUME 5 OF 5
W1 PUMP STATION REPLACEMENT

W1 PUMP STATION DEMOLITION PLAN

FILE NO.	SIZE	DWG. NO.	REV
	F	79K38877 VOL 5	A

PROJ. NO. 96968.3 SHEET 5

D2

SC FORM 1-11 (3/76)(C/G 3/94)

NOTICE: When Government drawings, specifications, or other data are used for any purpose other than in connection with a definitely related Government procurement operation, the United States Government thereby incurs no responsibility nor obligation whatsoever; and the fact that the Government may have formulated, furnished, or in any way supplied the said drawings, specifications or other data is not to be regarded by implication or otherwise as in any manner licensing the holder or any other person or corporation, or conveying any rights or permission to manufacture, use, or sell any patented invention that may in any way be related thereto.

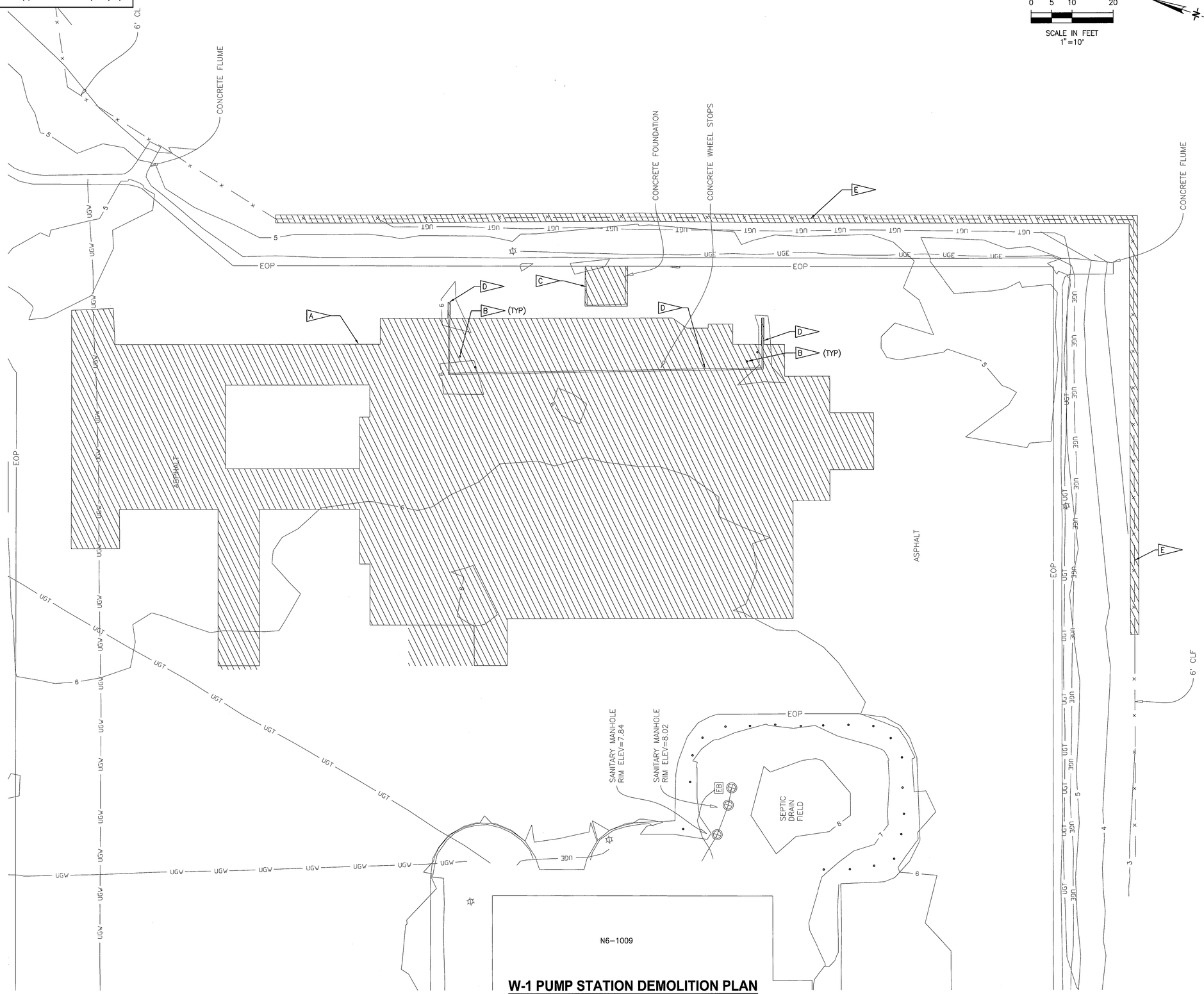

W-1 PUMP STATION DEMOLITION PLAN

1"=10'

GRAPHIC SCALE

0 5 10 20

SCALE IN FEET
1"=10'

NOTES

A. SAWCUT AND DEMOLISH EXISTING ASPHALT PAVEMENT AND BASE MATERIAL. REFER TO STRUCTURAL AND ARCHITECTURAL DWGS. FOR BIDDING PURPOSES, CONTRACTOR SHALL DETERMINE LIMITS OF ASPHALT PAVEMENT REMOVAL.

B. DEMOLISH AND REMOVE BOLLARDS AND GUY ANCHORS.

C. DEMOLISH AND REMOVE CONCRETE FOUNDATION PAD.

D. REMOVE CONCRETE WHEEL STOPS.

E. DEMOLISH EXISTING FENCE. CONTRACTOR TO COORDINATE WITH CO AND NASA SECURITY BEFORE FENCING IS REMOVED. CONTRACTOR SHALL PROVIDE TEMPORARY 8' CHAIN LINK FENCING AS NEEDED TO ENSURE FACILITY SECURITY.

THIS SPACE RESERVED

SYM	ZONE	DESCRIPTION	DATE	APPROVED
A		ADDED SHEET - INITIAL RELEASE TO EPC	12/05/11	

REVISIONS

THIS DRAWING CREATED IN AUTOCAD 2010 FILE FORMAT AND WILL BE REVISED ONLY ON AN AUTOCAD SYSTEM. FILE: 14000189-DP5-C01.DWG

JONES EDMUNDS
730 NE WALDO ROAD, GAINESVILLE, FLORIDA 32641 / (352) 377-5821
3910 S WASHINGTON AVE, SUITE 210, TITUSVILLE, FLORIDA 32780 / (321) 269-2950

SIGNATURES	DATE
DRAWN J. ALLEN	12/05/11
CHECKED U. ROSARIO	12/05/11
SUBMITTED W. NICKEL	12/05/11
ST of LICENSURE: FL LICENSE NO: 68638	
APPROVED M. CLARK	12/5/11
K. MILLER	12/5/11

NATIONAL AERONAUTICS AND SPACE ADMINISTRATION
JOHN F. KENNEDY SPACE CENTER, NASA
KENNEDY SPACE CENTER, FLORIDA

REVITALIZE WATER & WASTEWATER SYSTEMS - VOLUME 5 OF 5
W1 PUMP STATION REPLACEMENT

W-1 PUMP STATION DEMOLITION PLAN

FILE NO.	SIZE	DWG. NO.	REV
	F	79K38877 VOL 5	A
PROJ. NO. 96968.3		SHEET 6	

C1

NOTICE: When Government drawings, specifications, or other data are used for any purpose other than in connection with a definitely related Government procurement operation, the United States Government thereby incurs no responsibility nor obligation whatsoever; and the fact that the Government may have formulated, furnished, or in any way supplied the said drawings, specifications or other data is not to be regarded by implication or otherwise as in any manner licensing the holder or any other person or corporation, or conveying any rights or permission to manufacture, use, or sell any patented invention that may in any way be related thereto.

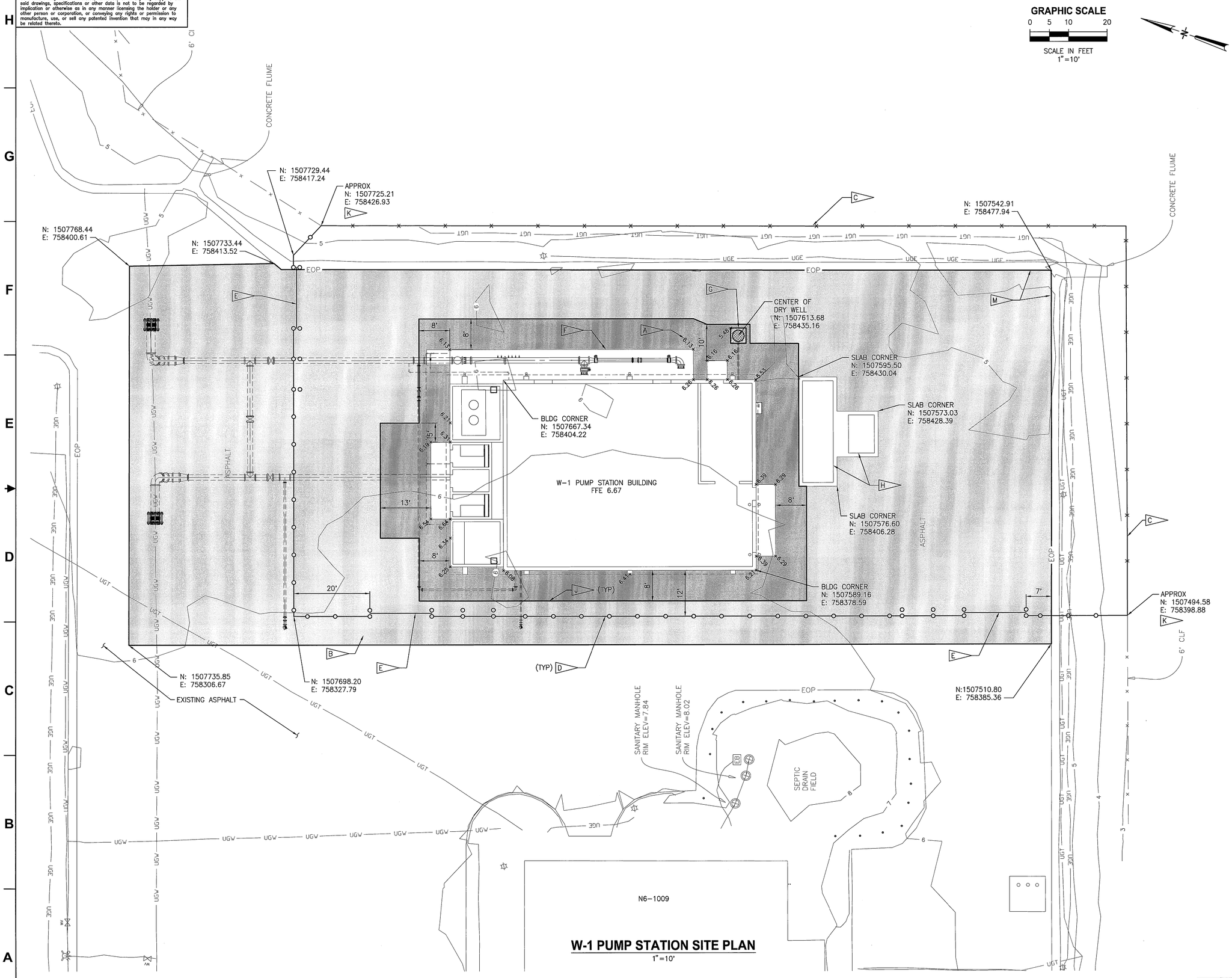

W-1 PUMP STATION SITE PLAN

1"=10'

GENERAL CIVIL NOTE

1. PROVIDE THRUST BLOCK PER DETAIL 3/C9

NOTES

- A — FINISH GRADE SPOT ELEVATION (TYP)
- B — LIMITS OF ASPHALT RESURFACING 1.5" MILLING AND RESURFACING WITH SP12.5.
- C — INSTALL CHAIN LINK FENCE. SEE DETAIL 1/C2|C5
- D — "AMERISTAR IMPASSE ANTI-SCALE GAUNTLET" 3-RAIL STEEL FENCE, 8'x8' PANELS OR APPROVED EQUAL. INSTALL PER MANUFACTURER'S SPECIFICATIONS. SEE C6 2/C2|C6
- E — "AMERISTAR TRANSPORT IS GAUNTLET" 3-RAIL CANTILEVER GATE, 16' OPENING, OR APPROVED EQUAL. INSTALL PER MANUFACTURER'S SPECIFICATIONS. SEE C6 1/C2|C6
- F — CONCRETE SLAB. SEE STRUCTURAL AND ARCHITECTURAL DWGS.
- G — DRY WELL. SEE DETAIL 3/C7
- H — STANDBY GENERATOR AND ABOVE GROUND FUEL TANK ON CONCRETE SLAB. SEE STRUCTURAL AND ELECTRICAL DWGS.
- J — LIMIT OF FULL DEPTH PAVEMENT CONSTRUCTION AT EXTERIOR WALL. SEE DETAIL 4/C2|C5
- K — TIE NEW FENCE TO EXISTING FENCE.
- L — PARTIALLY OBSCURED EXISTING PARKING STRIPES SHALL BE PAINTED OVER TO REMOVE THEM.
- M — EXISTING CONCRETE CURB.

THIS SPACE RESERVED

SYM	ZONE	DESCRIPTION	DATE	APPROVED
A		ADDED SHEET - INITIAL RELEASE TO EDC	12/05/11	KM

REVISIONS

THIS DRAWING CREATED IN AUTOCAD 2010 FILE FORMAT AND WILL BE REVISED ONLY ON AN AUTOCAD SYSTEM. FILE: 14000189-DP5-C02.DWG

JONES EDMUNDS
730 NE WALDO ROAD, GAINESVILLE, FLORIDA 32641 / (352) 377-5821
3910 S WASHINGTON AVE, SUITE 210, TITUSVILLE, FLORIDA 32780 / (321) 269-2950

SIGNATURES	DATE
DRAWN J. ALLEN	12/05/11
CHECKED U. ROSARIO	12/05/11
SUBMITTED W. NICKEL	12/05/11
ST of LICENSURE: FL LICENSE NO: 68638	
APPROVED M. CLARK	12/5/11
K. MILLER	12/5/11

NATIONAL AERONAUTICS AND SPACE ADMINISTRATION
JOHN F. KENNEDY SPACE CENTER, NASA
KENNEDY SPACE CENTER, FLORIDA

REVITALIZE WATER & WASTEWATER SYSTEMS - VOLUME 5 OF 5
W1 PUMP STATION REPLACEMENT

W-1 PUMP STATION SITE PLAN

FILE NO.	SIZE	DWG. NO.	REV
	F	79K38877 VOL 5	A
PROJ. NO. 96968.3		SHEET 7	

C2

NOTICE: When Government drawings, specifications, or other data are used for any purpose other than in connection with a definitely related Government procurement operation, the United States Government thereby incurs no responsibility nor obligation whatsoever; and the fact that the Government may have formulated, furnished, or in any way supplied the said drawings, specifications or other data is not to be regarded by implication or otherwise as in any manner licensing the holder or any other person or corporation, or conveying any rights or permission to manufacture, use, or sell any patented invention that may in any way be related thereto.

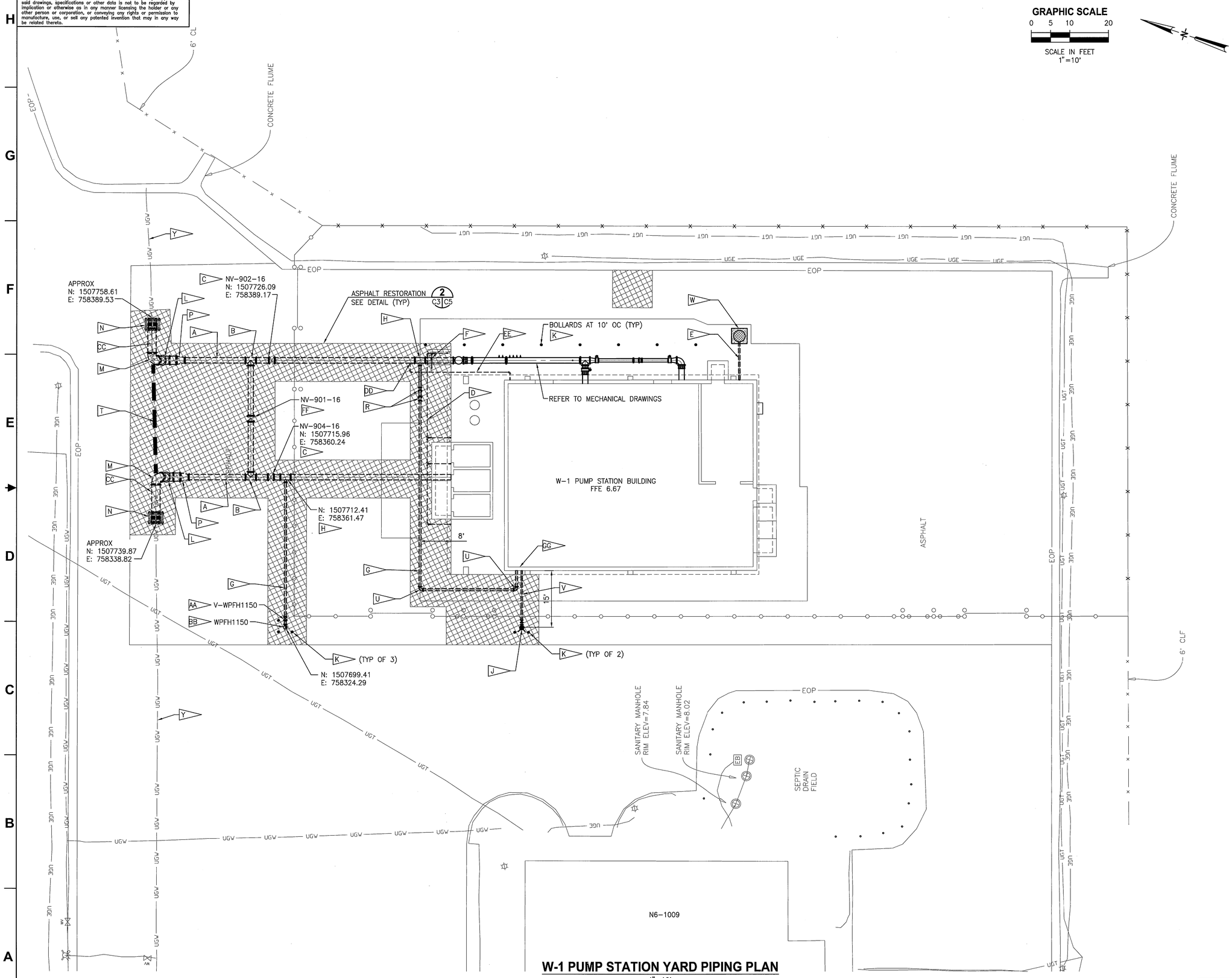

W-1 PUMP STATION YARD PIPING PLAN

1"=10'

NOTES

- A — 16" DI WM
- B — 16" RMJ DI TEE
- C — 16" RMJ GV
- D — 2" PVC
- E — 4" PVC DRAIN
- F — 2" SERVICE CONNECTION. SEE DETAIL 1/C3|C7
- G — 6" DI WM
- H — 16"X6" RMJ DI TEE
- J — FREE STANDING SIAMESE FDC. SEE DETAIL 2/C3|C7
- K — BOLLARD. SEE DETAIL 3/C3|C5
- L — 24" RMJ 45° BEND
- M — 24" RMJ 90° BEND (ROLLED)
- N — 24" RMJ SLEEVE AND PIPE
- P — 24"x16" RMJ REDUCER
- R — (2) 6" RMJ 45° BENDS (1 UP, 1 DOWN)
- T — GROUT AND ABANDON EXISTING 24" CI WM
- U — 6" 90° RMJ BEND
- V — 4" DI WM
- W — DRY WELL. SEE DETAIL 3/C7
- Y — EXISTING 24" CI WM
- AA — 6" RMJ GV
- BB — FIRE HYDRANT. SEE DETAIL 6/C3|C7
- CC — CUT AND REMOVE EXISTING 24" CI WM. REMOVE EXISTING CI PIPE TO NEXT FULL JOINT TO AVOID CUTTING OF EXISTING PIPE. PROVIDE NECESSARY COUPLING COMPONENTS AND PIPE AS REQUIRED TO MAKE CONNECTION
- DD — 1" SERVICE CONNECTION. SEE DETAIL 1/C3|C7
- EE — 1" PVC
- FF — 16" RMJ GV (NORMALLY CLOSED)
- GG — SEE FP-2 FOR SPRINKLER SYSTEM RISER CONNECTION

THIS SPACE RESERVED

SYM	ZONE	DESCRIPTION	DATE	APPROVED
A		ADDED SHEET - INITIAL RELEASE TO EDC	12/05/11	

REVISIONS

THIS DRAWING CREATED IN AUTOCAD 2010 FILE FORMAT AND WILL BE REVISED ONLY ON AN AUTOCAD SYSTEM. FILE: 14000189-DP5-C03.DWG

JONES EDMUNDS
730 NE WALDO ROAD, GAINESVILLE, FLORIDA 32641 / (352) 377-5821
3910 S WASHINGTON AVE, SUITE 210, TITUSVILLE, FLORIDA 32780 / (321) 269-2950

SIGNATURES	DATE
DRAWN J. ALLEN	12/05/11
CHECKED U. ROSARIO	12/05/11
SUBMITTED W. NICKEL	12/05/11
ST of LICENSURE: FL LICENSE NO: 68638	
APPROVED M. CLARK	12/5/11
K. MILLER	12/5/11

NATIONAL AERONAUTICS AND SPACE ADMINISTRATION
JOHN F. KENNEDY SPACE CENTER, NASA
KENNEDY SPACE CENTER, FLORIDA

REVITALIZE WATER & WASTEWATER SYSTEMS - VOLUME 5 OF 5
W1 PUMP STATION REPLACEMENT

W-1 PUMP STATION YARD PIPING PLAN

FILE NO.	SIZE	DWG. NO.	REV
	F	79K38877 VOL 5	A

PROJ. NO. 96968.3 | SHEET 8

C3

NOTICE: When Government drawings, specifications, or other data are used for any purpose other than in connection with a definitely related Government procurement operation, the United States Government thereby incurs no responsibility nor obligation whatsoever; and the fact that the Government may have formulated, furnished, or in any way supplied the said drawings, specifications or other data is not to be regarded by implication or otherwise as in any manner licensing the holder or any other person or corporation, or conveying any rights or permission to manufacture, use, or sell any patented invention that may in any way be related thereto.

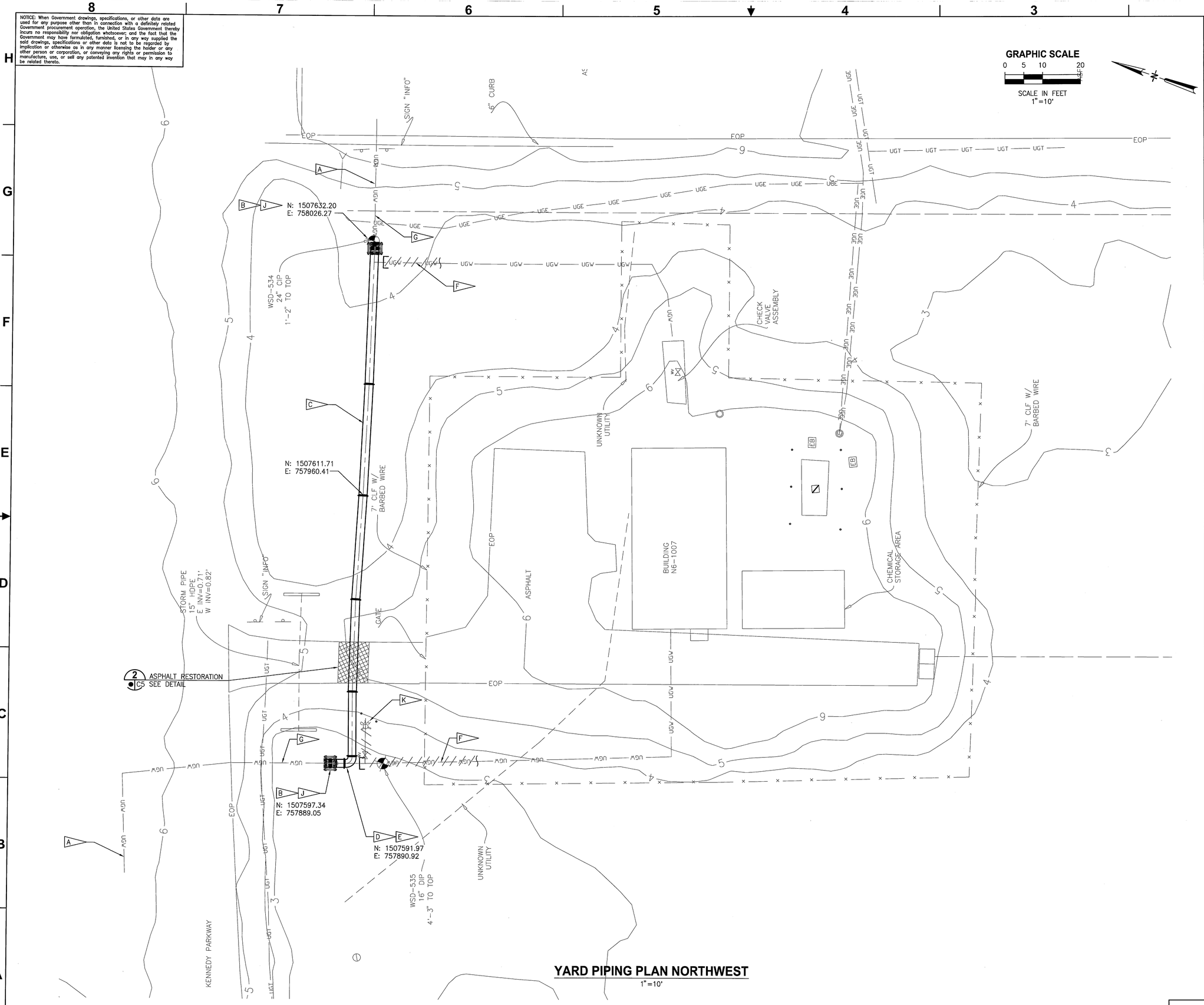

YARD PIPING PLAN NORTHWEST

1"=10'

- A — EXISTING 24" CI WM
- B — MATCH IE OF EXISTING 24" CIP WM, 24" RMJ SLEEVE
- C — 24" DI WM
- D — 24" RMJ 90° BEND
- E — THRUST BLOCK. SEE DETAIL 3 C9
- F — EXISTING 24" DI WM TO BE REMOVED. SEE D2 FOR LIMITS OF DEMO
- G — CUT AND REMOVE EXISTING 24" CI WM. REMOVE EXISTING CI PIPE TO NEXT FULL JOINT TO AVOID CUTTING OF EXISTING PIPE. PROVIDE NECESSARY COUPLING COMPONENTS AND PIPE AS REQUIRED TO MAKE CONNECTION
- H. THIS WORK IS TO BE COMPLETED AFTER W1 REPLACEMENT IS ONLINE
- J — CUT AND REMOVE EXISTING 24" CI WM, EXISTING FITTINGS, AND EXISTING THRUST BLOCKS
- K — REMOVE EXISTING FIRE HYDRANT ASSEMBLY AND ANY EXISTING BOLLARDS. ABANDON AND CAP PIPE EXISTING 6" WATER MAIN SERVICING HYDRANT BELOW GRADE

THIS SPACE RESERVED

SYM	ZONE	DESCRIPTION	DATE	APPROVED
A		ADDED SHEET – INITIAL RELEASE TO EOC	12/05/11	KJR

REVISIONS

THIS DRAWING CREATED IN AUTOCAD 2010 FILE FORMAT AND WILL BE REVISED ONLY ON AN AUTOCAD SYSTEM. FILE: 14000189-DP5-C04.DWG

JONES EDMUNDS
730 NE WALDO ROAD, GAINESVILLE, FLORIDA 32641 / (352) 377-5821
3910 S WASHINGTON AVE, SUITE 210, TITUSVILLE, FLORIDA 32780 / (321) 269-2950

SIGNATURES	DATE
DRAWN J. ALLEN	12/05/11
CHECKED U. ROSARIO	12/05/11
SUBMITTED W. NICKEL	12/05/11
ST of LICENSURE: FL LICENSE NO: 68638	
APPROVED M. CLARK	12/5/11
K. MILLER	12/5/11

NATIONAL AERONAUTICS AND SPACE ADMINISTRATION
JOHN F. KENNEDY SPACE CENTER, NASA
KENNEDY SPACE CENTER, FLORIDA

REVITALIZE WATER & WASTEWATER SYSTEMS - VOLUME 5 OF 5
W1 PUMP STATION REPLACEMENT

YARD PIPING PLAN NORTHWEST

FILE NO.	SIZE	DWG. NO.	REV
	F	79K38877 VOL 5	A
PROJ. NO. 96968.3		SHEET 9	

C4

NOTICE: When Government drawings, specifications, or other data are used for any purpose other than in connection with a definitely related Government procurement operation, the United States Government thereby incurs no responsibility nor obligation whatsoever; and the fact that the Government may have formulated, furnished, or in any way supplied the said drawings, specifications or other data is not to be regarded by implication or otherwise as in any manner licensing the holder or any other person or corporation, or conveying any rights or permission to manufacture, use, or sell any patented invention that may in any way be related thereto.

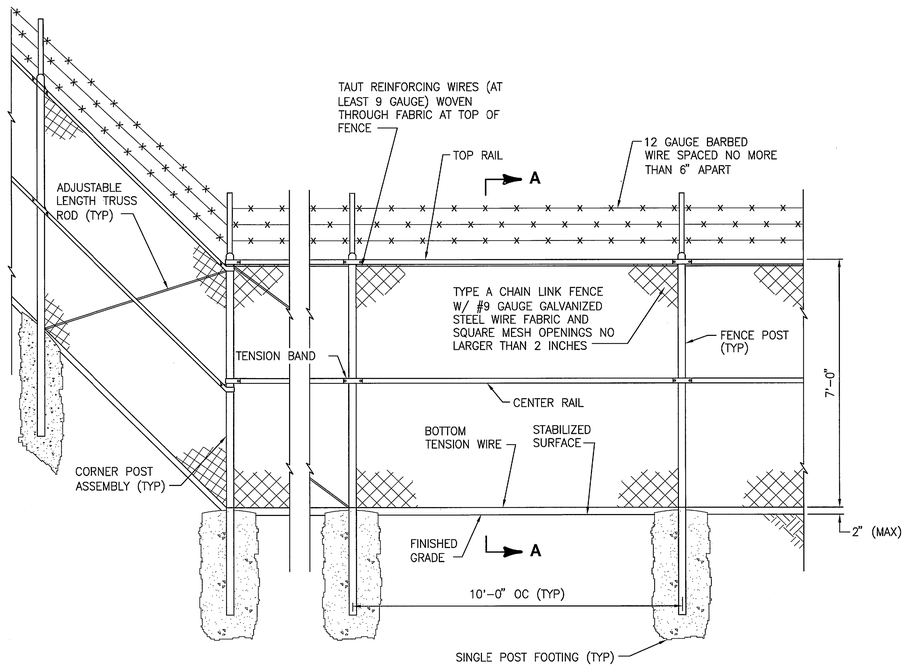

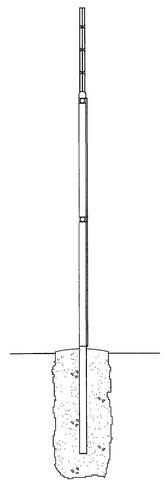

SECTION A-A

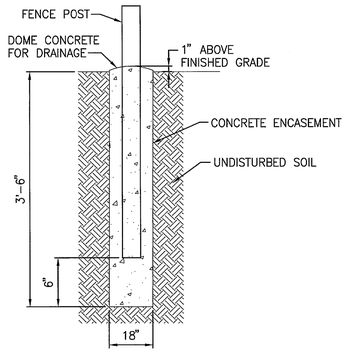

SINGLE POST FOOTING

CHAIN LINK FENCE DETAIL (1)

NTS — C2 | C5

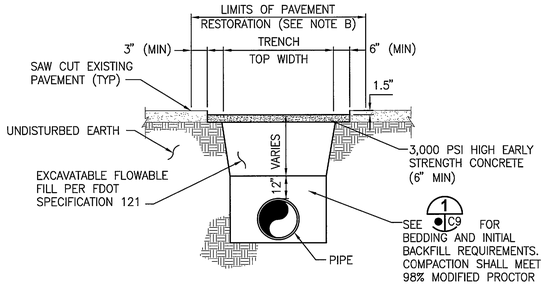

NOTES:

A. REPLACE EXISTING CURBS AS NEEDED PER FDOT INDEX 300.

B. RESTORATION AREAS SHOWN ON PLANS ARE FOR REFERENCE ONLY. FOR BIDDING PURPOSES CONTRACTOR SHALL DETERMINE LIMITS OF ASPHALT RESTORATION BASED ON PLANNED INSTALLATION METHOD.

C. STRUCTURAL COURSE NOT REQUIRED WITHIN LIMITS OF RESURFACING AS THIS WILL BE INCLUDED AS PART OF THE RESURFACING WORK. SEE C2.

ASPHALT PAVEMENT RESTORATION DETAIL (2)

NTS — C3 | C5

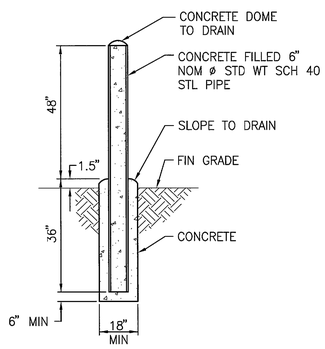

NOTES:

A. ACTUAL INSTALLATION LOCATION OF EACH BOLLARD SHALL BE AS DIRECTED IN THE FIELD.

B. PAINT ALL PIPING MATERIALS OSHA SAFETY YELLOW.

BOLLARD DETAIL (3)

NTS — C3 | C5

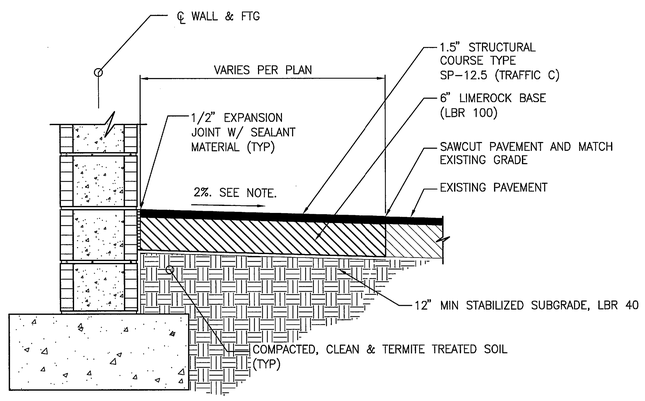

NOTE:
PAVEMENT SLOPE VARIES AT CONCRETE LANDINGS. SEE SPOT ELEVATONS IN PLAN.

PAVEMENT AT EXTERIOR WALL DETAIL (4)

NTS — C5

THIS SPACE RESERVED

SYM	ZONE	DESCRIPTION	DATE	APPROVED
A		ADDED SHEET - INITIAL RELEASE TO EDC	12/05/11	KRA

REVISIONS

THIS DRAWING CREATED IN AUTOCAD 2010 FILE FORMAT AND WILL BE REVISED ONLY ON AN AUTOCAD SYSTEM. FILE: 14000189-DP5-C05.DWG

JONES EDMUNDS
730 NE WALDO ROAD, GAINESVILLE, FLORIDA 32641 / (352) 377-5821
3910 S WASHINGTON AVE, SUITE 210, TITUSVILLE, FLORIDA 32780 / (321) 269-2950

SIGNATURES	DATE
DRAWN J. ALLEN	12/05/11
CHECKED U. ROSARIO	12/05/11
SUBMITTED W. NICKEL	12/05/11
ST of LICENSURE: FL LICENSE NO: 68638	
APPROVED M. CLARK	12/5/11
K. MILLER	12/5/11

NATIONAL AERONAUTICS AND SPACE ADMINISTRATION
JOHN F. KENNEDY SPACE CENTER, NASA
KENNEDY SPACE CENTER, FLORIDA

REVITALIZE WATER & WASTEWATER SYSTEMS - VOLUME 5 OF 5
W1 PUMP STATION REPLACEMENT

CIVIL DETAILS

FILE NO.	SIZE	DWG. NO.	REV
	F	79K38877 VOL 5	A
PROJ. NO. 96968.3		SHEET 10	

C5

NOTICE: When Government drawings, specifications, or other data are used for any purpose other than in connection with a definitely related Government procurement operation, the United States Government thereby incurs no responsibility nor obligation whatsoever; and the fact that the Government may have formulated, furnished, or in any way supplied the said drawings, specifications or other data is not to be regarded by implication or otherwise as in any manner licensing the holder or any other person or corporation, or conveying any rights or permission to manufacture, use, or sell any patented invention that may in any way be related thereto.

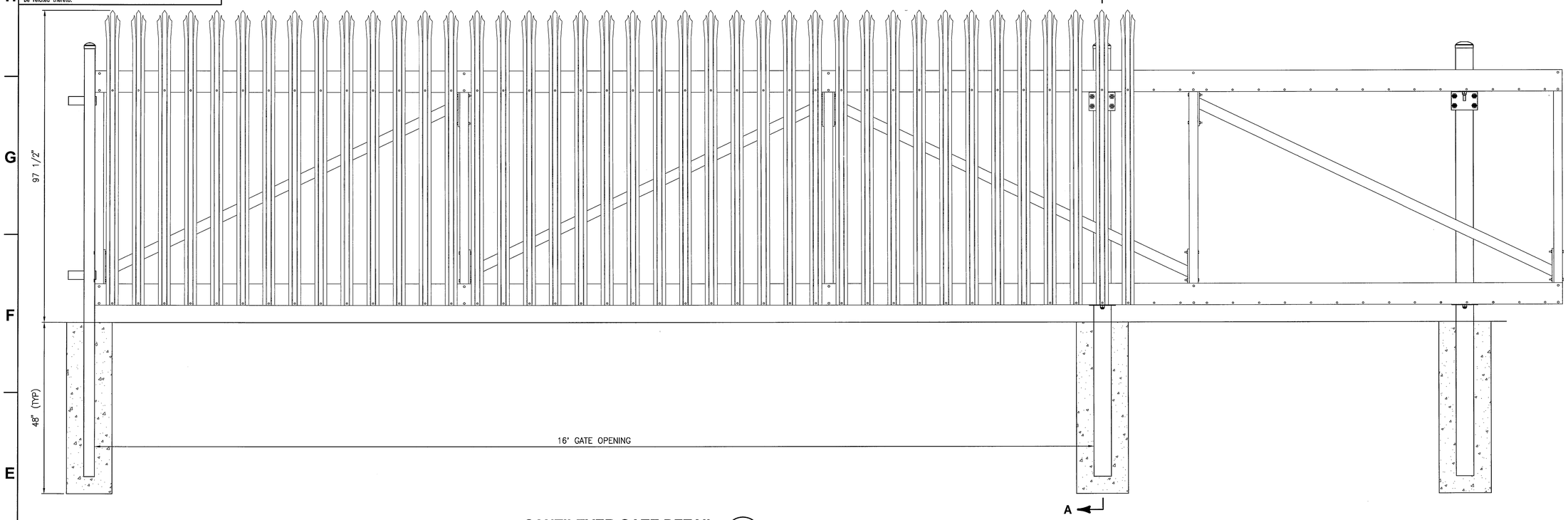

CANTILEVER GATE DETAIL (1)

NTS — C2 | C6

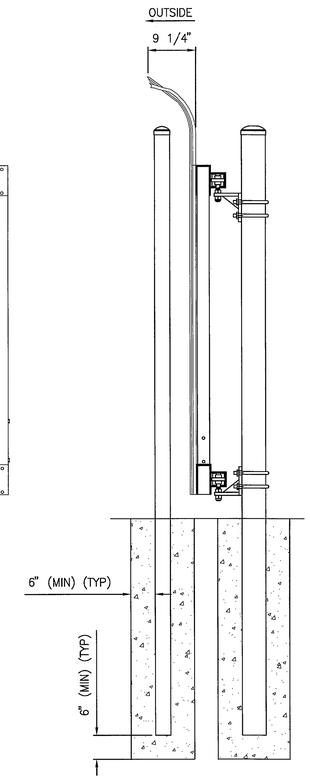

SECTION A-A

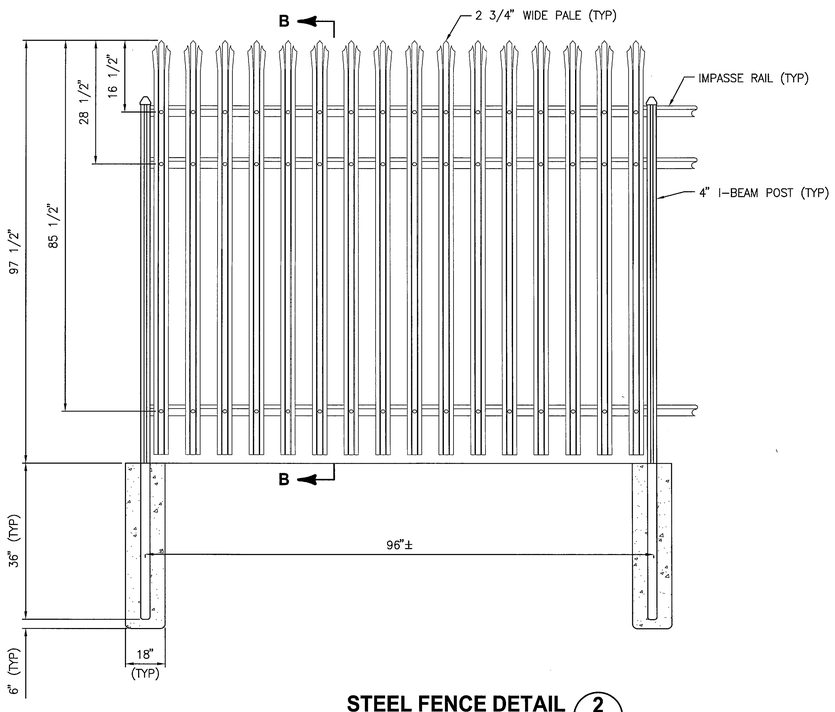

STEEL FENCE DETAIL (2)

NTS — C2 | C6

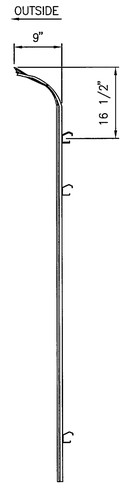

SECTION B-B

NOTES

A. THE CONTRACTOR SHALL PROVIDE ALL LABOR, MATERIALS AND APPURTENANCES NECESSARY FOR INSTALLATION OF THE STEEL FENCE AND CANTILEVER GATE SYSTEM.

B. THE ENTIRE FENCE SYSTEM, AND ALL ASSOCIATED GATES, ACCESSORIES, FITTINGS, AND FASTENERS SHALL BE OBTAINED FROM A SINGLE SOURCE.

C. STEEL MATERIAL FOR FENCE FRAMEWORK (I.E., CORRUGATED PALES, RAILS AND POSTS) AND ROLL GATE COMPONENTS SHALL BE GALVANIZED PRIOR TO FORMING IN ACCORDANCE WITH THE REQUIREMENTS OF ASTM A924/A924M, WITH A MINIMUM YIELD STRENGTH OF 45,000 PSI (344 MPA). THE STEEL SHALL BE HOT-DIP GALVANIZED TO MEET THE REQUIREMENTS OF ASTM A653/A653M WITH A MINIMUM ZINC COATING WEIGHT OF 0.90 OZ/FT 2 (276 G/M2), COATING DESIGNATION G-90.

D. STEEL MATERIAL FOR CANTILEVER GATE COMPONENTS (I.E. PALES, RAILS, DIAGONALS AND UPRIGHTS), SHALL BE COMMERCIAL STEEL WITH MINIMUM YIELD STRENGTH OF 45,000 PSI (344 MPA). THE CANTILEVER GATES SHALL BE SUBJECTED TO A COATING PROCESS INCLUDING, AS A MINIMUM, A SIX-STAGE PRE-TREATMENT/WASH (WITH ZINC PHOSPHATE), AN ELECTROSTATIC SPRAY APPLICATION OF AN EPOXY BASE, AND A SEPARATE ELECTROSTATIC SPRAY APPLICATION OF A POLYESTER FINISH. THE BASE COAT SHALL BE A THERMOSETTING EPOXY POWDER COATING (GRAY IN COLOR) WITH A MINIMUM THICKNESS OF OF 2 MILS (0.0508MM). THE TOPCOAT SHALL BE A "NO-MAR" TGIC POLYESTER POWDER COAT FINISH WITH A MINIMUM THICKNESS OF 2 MILS (0.0508MM). THE COLOR SHALL BE BLACK.

E. COMPLETED GATES SHALL BE CAPABLE OF SUPPORTING A 200 LB LOAD APPLIED AT MIDSPAN WITHOUT PERMANENT DEFORMATION.

F. THE FENCE SYSTEM AND CANTILEVER GATE SYSTEM SHALL BE INSTALLED PER MANUFACTURER'S SPECIFICATIONS.

G. THIS DRAWING IS FOR INFORMATION ONLY.

H. SEE C2 FOR MFR.

THIS SPACE RESERVED

SYM	ZONE	DESCRIPTION	DATE	APPROVED
A		ADDED SHEET- INITIAL RELEASE TO EDC	12/05/11	KM

REVISIONS

THIS DRAWING CREATED IN AUTOCAD 2010 FILE FORMAT AND WILL BE REVISED ONLY ON AN AUTOCAD SYSTEM. FILE: 14000189-DP5-C06.DWG

JONES EDMUNDS
730 NE WALDO ROAD, GAINESVILLE, FLORIDA 32641 / (352) 377-5821
3910 S WASHINGTON AVE, SUITE 210, TITUSVILLE, FLORIDA 32780 / (321) 269-2950

SIGNATURES	DATE
DRAWN J. ALLEN	12/05/11
CHECKED U. ROSARIO	12/05/11
SUBMITTED W. NICKEL	12/05/11
ST of LICENSURE: FL LICENSE NO: 68638	
APPROVED M. CLARK	12/5/11
K. MILLER	12/5/11

NATIONAL AERONAUTICS AND SPACE ADMINISTRATION
JOHN F. KENNEDY SPACE CENTER, NASA
KENNEDY SPACE CENTER, FLORIDA

REVITALIZE WATER & WASTEWATER SYSTEMS - VOLUME 5 OF 5
W1 PUMP STATION REPLACEMENT

CIVIL DETAILS

FILE NO.	SIZE	DWG. NO.	REV
	F	79K38877 VOL 5	A
PROJ. NO. 96968.3		SHEET 11	

C6

NOTICE: When Government drawings, specifications, or other data are used for any purpose other than in connection with a definitely related Government procurement operation, the United States Government thereby incurs no responsibility nor obligation whatsoever; and the fact that the Government may have formulated, furnished, or in any way supplied the said drawings, specifications or other data is not to be regarded by implication or otherwise as in any manner licensing the holder or any other person or corporation, or conveying any rights or permission to manufacture, use, or sell any patented invention that may in any way be related thereto.

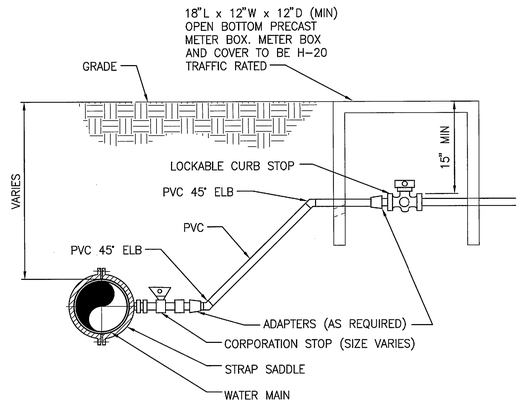

TYPICAL SERVICE CONNECTION DETAIL (1)
NTS C3 C7

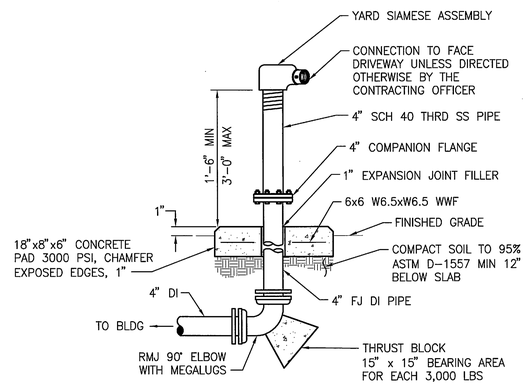

YARD SIAMESE DETAIL (2)
NTS C3 C7

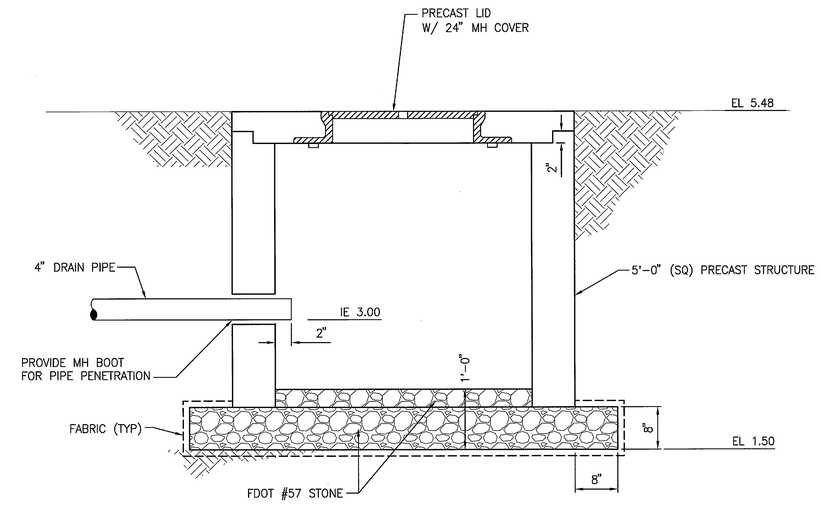

DRY WELL DETAIL (3)
NTS C7

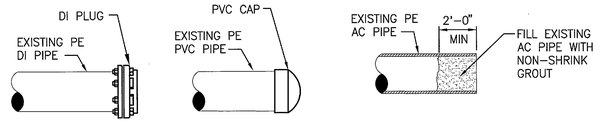

CI PIPE AIP | PVC PIPE AIP | AC PIPE AIP

CAP DETAIL (4)
NTS C4

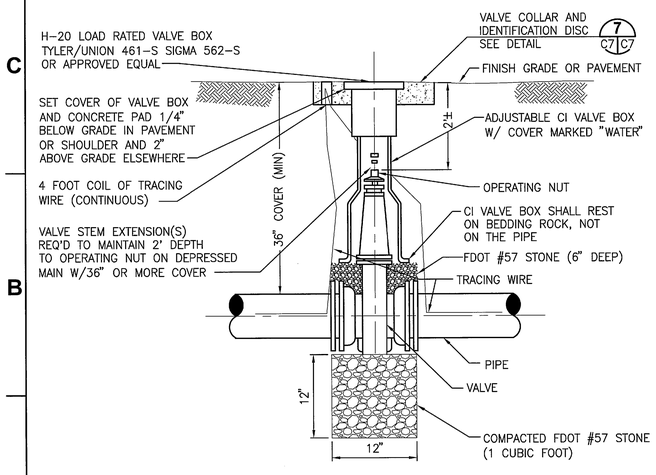

GATE VALVE BOX DETAIL (5)
NTS C7 C7

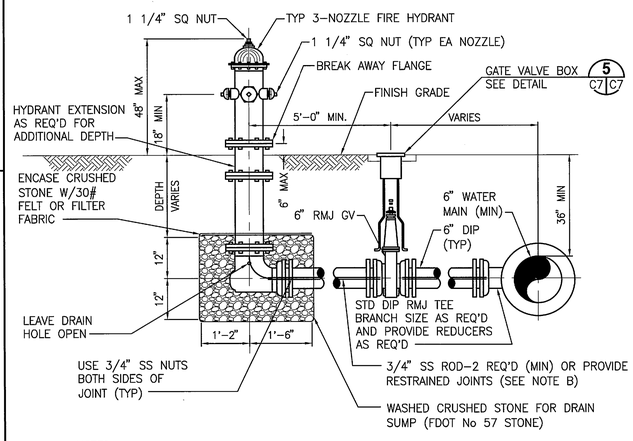

NOTES:

A. FIRE HYDRANT INSTALLATION SHALL BE IN ACCORDANCE WITH NASA-STD 8719.11A SECTION 5.3.2

B. 3/4" STAINLESS STEEL ROD CUT AND THREADED AS REQUIRED, OR PROVIDE RESTRAINED JOINTS.

C. TIE RODS, NUTS, WASHERS AND OTHER FASTENERS SHALL BE GALVANIZED OR TYPE 316 STAINLESS STEEL.

D. 4 1/2" PUMPER NOZZLE TO BE PERPENDICULAR TO CENTERLINE OF ADJACENT FENCE LINE.

E. FIRE HYDRANT ASSEMBLY INCLUDES ALL THAT IS SHOWN INCLUDING DI PIPE TO MAIN, DIP TEE AT MAIN, HYDRANT, REDUCERS, VALVE, HYDRANT EXTENSIONS, VALVE EXTENSIONS, ALL PIPING AND MISCELLANEOUS APPURTENANCES REQUIRED FOR A COMPLETE INSTALLATION.

G. FOR FIRE HYDRANTS ALONG PAVED ROADWAYS, INSTALL RAISED PAVEMENT MARKER FOR FIRE HYDRANT IDENTIFICATION. MARKER SHALL BE BLUE AND IN ACCORDANCE WITH FDOT 706. MARKER SHALL BE LOCATED IN THE CENTER OF CLOSEST LANE PERPENDICULAR TO FIRE HYDRANT.

FIRE HYDRANT DETAIL (6)
NTS C3 C7

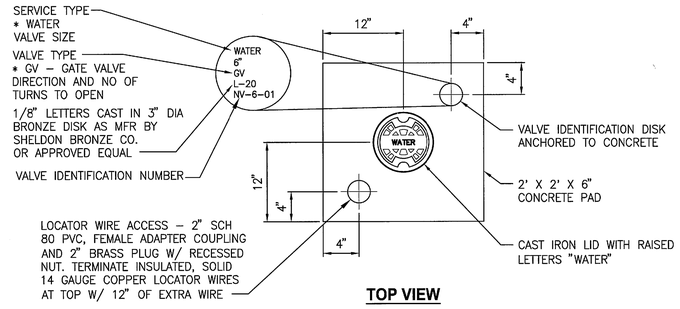

TOP VIEW

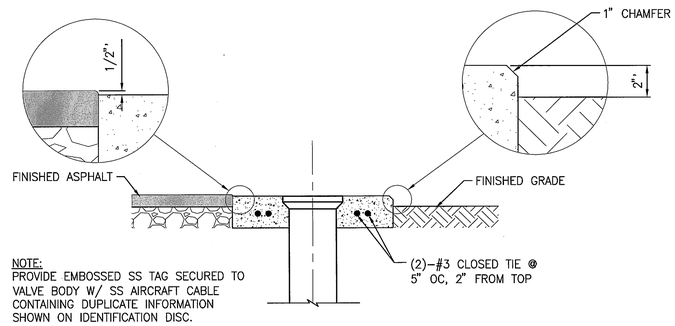

NOTE:
PROVIDE EMBOSSED SS TAG SECURED TO VALVE BODY W/ SS AIRCRAFT CABLE CONTAINING DUPLICATE INFORMATION SHOWN ON IDENTIFICATION DISC.

WATER VALVE COLLAR AND IDENTIFICATION DISK DETAIL (7)
NTS C7 C7

THIS SPACE RESERVED

SYM	ZONE	DESCRIPTION	DATE	APPROVED
A		ADDED SHEET - INITIAL RELEASE TO EDC	12/05/11	KM

REVISIONS

THIS DRAWING CREATED IN AUTOCAD 2010 FILE FORMAT AND WILL BE REVISED ONLY ON AN AUTOCAD SYSTEM. FILE: 14000189-DP5-C07.DWG

JONES EDMUNDS
730 NE WALDO ROAD, GAINESVILLE, FLORIDA 32641 / (352) 377-5821
3910 S WASHINGTON AVE, SUITE 210, TITUSVILLE, FLORIDA 32780 / (321) 269-2950

SIGNATURES	DATE
DRAWN J. ALLEN	12/05/11
CHECKED U. ROSARIO	12/05/11
SUBMITTED W. [illegible]	12/05/11
ST of LICENSURE: FL LICENSE NO: 68638	
APPROVED M. CLARK	12/7/11
K. MILLER	12/7/11

NATIONAL AERONAUTICS AND SPACE ADMINISTRATION
JOHN F. KENNEDY SPACE CENTER, NASA
KENNEDY SPACE CENTER, FLORIDA

REVITALIZE WATER & WASTEWATER SYSTEMS - VOLUME 5 OF 5
W1 PUMP STATION REPLACEMENT
CIVIL DETAILS

FILE NO.	SIZE	DWG. NO.	REV
	F	79K38877 VOL 5	A
PROJ. NO. 96968.3		SHEET 12	

C7

NOTICE: When Government drawings, specifications, or other data are used for any purpose other than in connection with a definitely related Government procurement operation, the United States Government thereby incurs no responsibility nor obligation whatsoever; and the fact that the Government may have formulated, furnished, or in any way supplied the said drawings, specifications or other data is not to be regarded by implication or otherwise as in any manner licensing the holder or any other person or corporation, or conveying any rights or permission to manufacture, use, or sell any patented invention that may in any way be related thereto.

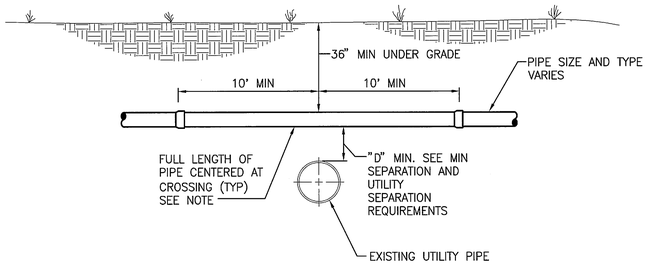

CROSSING OVER UTILITIES

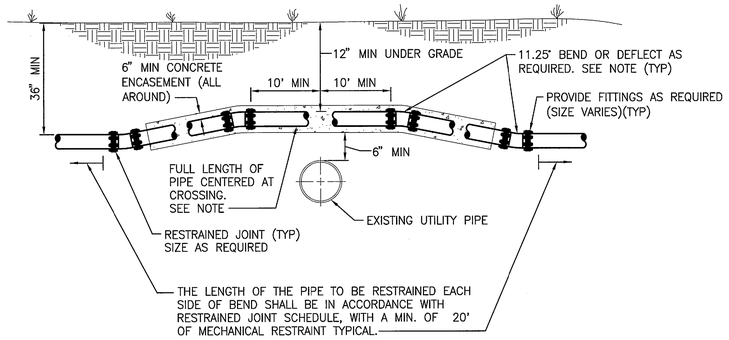

NOTE: ENCASEMENT IS REQUIRED IF DEPTH FROM GRADE TO TOP OF PIPE IS LESS THAN 24 INCHES.

CROSSING OVER UTILITIES (ENCASED)

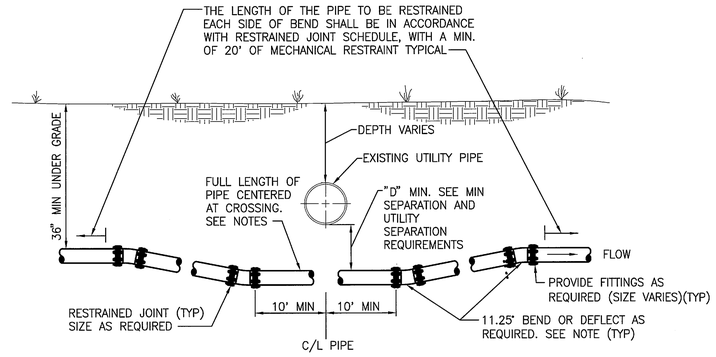

CROSSING UNDER UTILITIES

UTILITY SEPARATION REQUIREMENTS

A. IT IS REQUIRED THAT "WATER MAINS" BE INSTALLED, CLEANED, DISINFECTED AND HAVE A SATISFACTORY BACTERIOLOGICAL SURVEY PERFORMED IN ACCORDANCE WITH THE LATEST APPLICABLE AWWA STANDARDS AND CHAPTER 62–555, F.A.C. STANDARDS. FOR THE PURPOSE OF THIS SECTION, THE PHRASE "WATER MAINS" SHALL MEAN MAINS, INCLUDING TREATMENT PLANT PROCESS PIPING, CONVEYING EITHER RAW, PARTIALLY TREATED, OR FINISHED DRINKING WATER; FIRE HYDRANT LEADS; AND SERVICE LINES THAT HAVE AN INSIDE DIAMETER OF THREE (3) INCHES OR GREATER. IN ADDITION, THE PHRASE "REGULATED PUBLIC ACCESS RECLAIMED WATER" REFERS TO THE WATER REGULATED UNDER PART III OF CHAPTER 62.210, F.A.C.

B. NEW, RELOCATED OR EXISTING UNDERGROUND WATER MAINS SHALL BE LAID TO PROVIDE A HORIZONTAL DISTANCE OF AT LEAST THREE (3) FEET BETWEEN THE OUTSIDE OF THE WATER MAIN AND THE OUTSIDE OF ANY EXISTING OR PROPOSED STORM SEWER, STORMWATER FORCE MAIN, OR PIPELINE CONVEYING REGULATED PUBLIC ACCESS RECLAIMED WATER.

C. NEW OR RELOCATED, UNDERGROUND SEWER/WATER MAINS SHALL BE LOCATED TO PROVIDE A HORIZONTAL DISTANCE OF AT LEAST SIX (6) FEET, AND PREFERABLY TEN (10) FEET, BETWEEN THE OUTSIDE OF THE SEWER/WATER MAIN AND THE OUTSIDE OF ANY EXISTING OR PROPOSED WATER/GRAVITY OR PRESSURE–TYPE SANITARY SEWER, NON–REGULATED RECLAIMED WATER, OR WASTEWATER FORCE MAIN. THE MINIMUM HORIZONTAL SEPARATION DISTANCE BETWEEN WATER MAINS AND GRAVITY–TYPE SANITARY SEWERS MAY BE REDUCED TO THREE (3) FEET WHERE THE BOTTOM OF THE WATER MAIN IS LOCATED AT LEAST SIX (6) INCHES ABOVE THE TOP OF THE SEWER (SPECIAL CASE).

D. NEW, RELOCATED OR EXISTING UNDERGROUND WATER MAINS CROSSING ANY EXISTING OR PROPOSED GRAVITY OR VACUUM–TYPE SANITARY SEWER, OR STORM SEWER SHALL BE LOCATED SO THE OUTSIDE OF THE WATER MAIN IS AT LEAST SIX (6) INCHES, AND PREFERABLE TWELVE (12) INCHES, ABOVE OR AT LEAST TWELVE (12) INCHES BELOW THE OUTSIDE OF THE OTHER PIPELINE. HOWEVER, IT IS PREFERABLE TO LAY THE WATER MAIN ABOVE THE OTHER PIPELINE.

E. NEW, RELOCATED OR EXISTING UNDERGROUND WATER MAINS CROSSING ANY EXISTING OR PROPOSED PRESSURE–TYPE SANITARY SEWER, WASTEWATER OR STORMWATER FORCE MAIN, OR PIPELINE CONVEYING RECLAIMED WATER SHALL BE LOCATED SO THE OUTSIDE OF THE WATER MAIN IS A LEAST TWELVE (12) INCHES ABOVE OR BELOW THE OUTSIDE OF THE OTHER PIPELINE. HOWEVER, IT IS PREFERABLE TO LAY THE WATER MAIN ABOVE THE OTHER PIPELINE.

F. AT THE UTILITY CROSSINGS DESCRIBED IN NOTES D AND E ABOVE, ONE FULL LENGTH OF WATER MAIN PIPE SHALL BE CENTERED ABOVE OR BELOW THE OTHER PIPELINE SO THE WATER MAIN JOINTS WILL BE AS FAR AS POSSIBLE FROM THE OTHER PIPELINE. ALTERNATIVELY, AT SUCH CROSSINGS, THE PIPES SHALL BE ARRANGED SO THAT ALL WATER MAIN JOINTS ARE AT LEAST THREE (3) FEET FROM ALL JOINTS IN VACUUM–TYPE SANITARY SEWERS, STORM SEWERS, STORMWATER FORCE MAINS, OR PIPELINES CONVEYING REGULATED PUBLIC ACCESS RECLAIMED WATER, AND AT LEAST SIX (6) FEET FROM ALL JOINTS IN GRAVITY OR PRESSURE–TYPE SANITARY SEWERS, NON–REGULATED RECLAIMED WATER, OR WASTEWATER FORCE MAINS.

G. NEW, RELOCATED OR EXISTING FIRE HYDRANTS SHALL BE LOCATED SO THAT THE HYDRANTS ARE AT LEAST THREE (3) FEET FROM ANY EXISTING OR PROPOSED STORM SEWER, STORMWATER FORCE MAIN, OR PIPELINE CONVEYING REGULATED PUBLIC ACCESS RECLAIMED WATER; AT LEAST THREE (3) FEET, AND PREFERABLY TEN (10) FEET, FROM ANY EXISTING OR PROPOSED VACUUM–TYPE SANITARY SEWER; AT LEAST SIX (6) FEET, AND PREFERABLY TEN (10) FEET, FROM ANY EXISTING OR PROPOSED GRAVITY OR PRESSURE–TYPE SANITARY SEWER OR WASTEWATER FORCE MAIN.

H. IF THE CONTRACTOR CAN NOT MEET THE MINIMUM SEPARATION REQUIREMENTS HE/SHE MUST NOTIFY THE CONTRACTING OFFICER. THE CONTRACTING OFFICER IS REQUIRED TO DISCUSS MITIGATION WITH FDEP AND OBTAIN FDEP APPROVAL PRIOR TO INSTALLING ANY UTILITIES NOT IN COMPLIANCE WITH FDEP MINIMUM SEPARATION REQUIREMENTS.

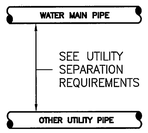

PLAN VIEW

OTHER PIPING TYPE	MINIMUM HORIZONTAL SEPARATION (FEET) SEE NOTE C
1. GRAVITY SANITARY SEWER	6
2. GRAVITY SANITARY SEWER (SPECIAL CASE, NOTE #3)	3
3. SEWAGE FORCE MAIN	6
4. GRAVITY STORM SEWER	3
5. RECLAIMED WATER (PUBLIC ACCESS)	3
6. ELECTRIC	3

MINIMUM HORIZONTAL SEPARATION REQUIREMENTS

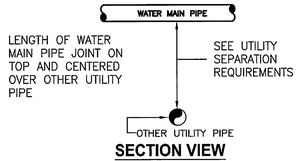

SECTION VIEW

OTHER PIPING TYPE	"D" – MINIMUM VERTICAL SEPARATION (INCHES) SEE NOTE D
1. GRAVITY SANITARY SEWER	6
2. SEWAGE FORCE MAIN	12
3. GRAVITY STORM SEWER	6
4. RECLAIMED WATER	12
5. ELECTRIC	6

NOTE:

J. IF THE WATER MAIN IS BELOW THE SEWER PIPE, THEN A MINIMUM OF 12" VERTICAL SEPARATION IS REQUIRED.

K. THE CONTRACTOR MAY CHOOSE TO DEFLECT THE PROPOSED PIPE UNDER OR OVER THE EXISTING UTILITY PIPE IN LIEU OF USING FITTINGS AS LONG AS THE MINIMUM DISTANCE "D" IS MAINTAINED AND THE AMOUNT OF PIPE DEFLECTION MEETS THE REQUIREMENTS OF THE SPECIFICATIONS.

MINIMUM VERTICAL SEPARATION REQUIREMENTS

TYPICAL UTILITY CONFLICT DETAIL 1 / C8

NTS

THIS SPACE RESERVED

SYM	ZONE	DESCRIPTION	DATE	APPROVED
A		ADDED SHEET – INITIAL RELEASE TO EDC	12/05/11	KVR

REVISIONS

THIS DRAWING CREATED IN AUTOCAD 2010 FILE FORMAT AND WILL BE REVISED ONLY ON AN AUTOCAD SYSTEM. FILE: 14000189–DP5–C08.DWG

JONES EDMUNDS
730 NE WALDO ROAD, GAINESVILLE, FLORIDA 32641 / (352) 377-5821
3910 S WASHINGTON AVE, SUITE 210, TITUSVILLE, FLORIDA 32780 / (321) 269-2950

SIGNATURES	DATE
DRAWN J. ALLEN	12/05/11
CHECKED U. ROSARIO	12/05/11
SUBMITTED W. NICKEL	12/05/11
ST of LICENSURE: FL LICENSE NO: 68638	
APPROVED M. CLARK	12/5/11
K. MILLER	12/5/11

NATIONAL AERONAUTICS AND SPACE ADMINISTRATION
JOHN F. KENNEDY SPACE CENTER, NASA
KENNEDY SPACE CENTER, FLORIDA

REVITALIZE WATER & WASTEWATER SYSTEMS - VOLUME 5 OF 5
W1 PUMP STATION REPLACEMENT

CIVIL DETAILS

FILE NO.	SIZE	DWG. NO.	REV
	F	79K38877 VOL 5	A

PROJ. NO. 96968.3 | SHEET 13

C8

NOTICE: When Government drawings, specifications, or other data are used for any purpose other than in connection with a definitely related Government procurement operation, the United States Government thereby incurs no responsibility nor obligation whatsoever; and the fact that the Government may have formulated, furnished, or in any way supplied the said drawings, specifications or other data is not to be regarded by implication or otherwise as in any manner licensing the holder or any other person or corporation, or conveying any rights or permission to manufacture, use, or sell any patented invention that may in any way be related thereto.

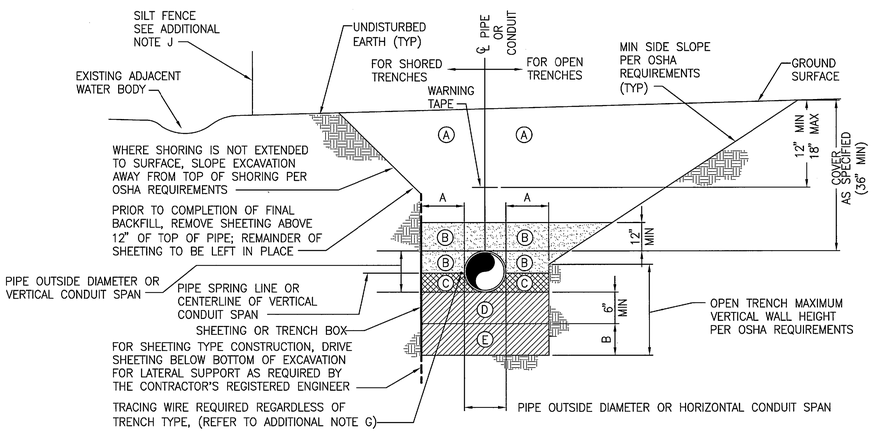

NOMINAL PIPE DIAMETER OR HORIZONTAL CONDUIT SPAN (INCHES)	MINIMUM SIDEWALL CLEARANCE	ADDITIONAL EXCAVATION DEPTH (1)
	A (INCHES)	B (INCHES)
LESS THAN 24	12	12
24 AND GREATER	18	18

(1) REQUIRED WHERE UNSUITABLE MATERIAL IS ENCOUNTERED.

ZONE NO.	ZONE NAME	MATERIAL	COMPACTION
A	FINAL BACKFILL	AS SPECIFIED	AT LEAST 95% MODIFIED PROCTOR MAXIMUM DRY DENSITY ASTM D-1557
B	INITIAL BACKFILL		
C	HAUNCHING		
D	BEDDING		
E	FOUNDATION		

TRENCH ZONE NOTES:

A FINAL BACKFILL SHALL BE INSTALLED IN LIFTS NOT EXCEEDING 6 INCHES, LOOSE MEASUREMENT. REFER TO ADDITIONAL NOTE H.

B INITIAL BACKFILL SHALL BE INSTALLED IN LIFTS NOT EXCEEDING 6 INCHES, LOOSE MEASUREMENT. ALL LIFTS SHALL BE COMPACTED BY HAND TAMPING OR AN APPROVED METHOD OF MECHANICAL TAMPING. REFER TO ADDITIONAL NOTE H.

C HAUNCHING SHALL BE IN COMPLETELY DEWATERED TRENCHES IN LIFTS NOT EXCEEDING 6 INCHES, LOOSE MEASUREMENT. ALL LIFTS SHALL BE COMPACTED BY HAND TAMPING. HAUNCHING SHALL BE BROUGHT UP EQUALLY ON BOTH SIDES OF THE PIPE.

D BEDDING SHALL BE INSTALLED IN COMPLETELY DEWATERED TRENCHES IN LIFTS NOT EXCEEDING 6 INCHES, LOOSE MEASUREMENT, AND SHALL BE COMPACTED BY HAND OR MECHANICAL TAMPING. PROPERLY SHAPED BELL HOLES SHALL BE EXCAVATED IN THE BEDDING TO PERMIT ASSEMBLY OF THE PIPE. REFER TO ADDITIONAL NOTE H.

NATIVE, UNDISTURBED MATERIAL IN COMPLETELY DEWATERED TRENCHES MEETING THE COMPACTION AND MATERIAL REQUIREMENTS FOR COMPACTED BEDDING MATERIAL NEED NOT BE REPLACED OR REWORKED, EXCEPT FOR SHAPING OF THE BELL HOLES, AND WHERE REFILL IS REQUIRED.

E FOUNDATION SHALL BE REQUIRED WHERE UNSUITABLE MATERIAL IS ENCOUNTERED. FOUNDATION SHALL BE IN ACCORDANCE WITH THE REQUIREMENTS FOR BEDDING. REFER TO ADDITIONAL NOTE H.

ADDITIONAL NOTES:

F. FOR TRENCHES IN VEHICULAR TRAFFIC AREAS OR BENEATH SURFACE IMPROVEMENTS (EG, SLAB, ETC.) SEE CONTRACT SPECIFICATIONS FOR ADDITIONAL COMPACTION REQUIREMENTS.

G. TRACING WIRE SHALL BE INSTALLED ON THE SIDE OF THE PIPE AND ATTACHED TO THE PIPE EVERY 10' W/ A NYLON WIRE TIE. IF THE WIRE IS DAMAGED OR NEEDS TO BE EXTENDED A 3M WATERPROOF TYPE UF SPLICE, OR APPROVED EQUAL, SHALL BE INSTALLED TO REPAIR THE WIRE. THE ENDS OF THE TRACING WIRE SHALL BE BROUGHT UP IN EVERY VALVE BOX ON THE LINE AND AT THE HYDRANT VALVES. THERE SHALL BE A MINIMUM COIL OF 3' LEFT UNDER THE VALVE BOX COVER. THE WIRE SHALL BE TESTED TO VERIFY CONDUCTIVITY.

H. ALTERNATIVE LIFT THICKNESSES, NOT EXCEEDING 12 INCHES LOOSE MEASUREMENT, ARE ACCEPTABLE IN TRENCH ZONES 1, 2, 4, AND 5 PROVIDED 1) THE LIFT THICKNESS DOES NOT EXCEED THE MAXIMUM VALUE RECOMMENDED IN WRITING BY THE APPLICABLE PIPE MANUFACTURER AND 2) FIELD TEST RESULTS CONFIRM THAT THE SPECIFIED COMPACTION REQUIREMENTS ARE BEING MET.

J. CONSTRUCT STORMWATER POLLUTION PREVENTION ITEMS ADJACENT TO ALL SOIL DISTURBANCES ACCORDING TO DETAILS ON EN3. PLACE ON DOWN SLOPE TO INTERCEPT SEDIMENT AND PROTECT NEARBY WATER BODIES AND UNDISTURBED AREAS. MAINTAIN STORMWATER POLLUTION PREVENTION ITEMS IN GOOD WORKING ORDER UNTIL ADEQUATE COVER MATERIALS ARE ESTABLISHED. IF A REPAIR IS NECESSARY, IT WILL BE INITIATED WITHIN 24 HOURS OF REPORT. BUILT UP SEDIMENT WILL BE REMOVED FROM STAKED SILT FENCE AND STAKED TURBIDITY BARRIERS WHEN IT HAS REACHED ONE-HALF THE HEIGHT OF THE SILT FENCE OR BARRIER.

TYPICAL UTILITY TRENCH DETAIL (1 / C9)

NTS

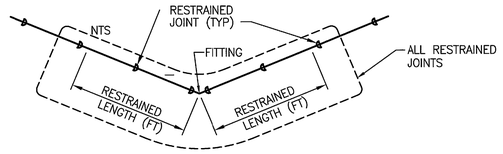

PIPE SIZE	FITTING								
	90° BEND	45° BEND	45° BEND (VERT)	22 1/2° BEND	22 1/2° BEND (VERT)	11 1/4° BEND	11 1/4° BEND (VERT)	VALVE, DEAD END OR REDUCER	TEE (BRANCH)
24"	89	37	113	18	36	9	18	273	273
16"	65	27	80	13	26	7	13	193	193
14"	58	24	71	12	23	6	12	172	172
12"	51	22	63	11	20	5	10	151	151
10"	44	18	53	9	17	5	9	128	128
8"	37	16	45	8	14	4	7	107	107
6"	29	12	34	6	11	3	6	82	82
4" (PVC)	17	8	16	4	8	2	4	38	37

NOTES:

A. RESTRAINED LENGTHS ARE IN FEET AND ARE FOR POLYETHYLENE WRAPPED DUCTILE IRON PIPE UNLESS OTHERWISE NOTED.

B. SEE SPECIFICATIONS FOR ADDITIONAL INFORMATION REGARDING RESTRAINED JOINTS.

C. THE SCHEDULE SHOWN IS FOR THE FOLLOWING SERVICE CONDITIONS 150 PSIG TEST PRESSURE; POORLY GRADED COARSE SAND; 36 INCHES COVER, TYPE 3 TRENCH CONDITIONS; AND 1.5 SAFETY FACTOR.

D. RESTRAINED LENGTHS SHOWN IN TABLE ARE IN FEET AND ARE MINIMUM LENGTHS REQUIRED IN EACH DIRECTION FROM FITTINGS OR VALVES.

E. ALL PIPE SHALL BE RESTRAINED TO THE NEXT JOINT BEYOND THE RESTRAINED LENGTH GIVEN.

F. RESTRAINED LENGTH FOR REDUCERS SHALL BE BASED ON THE SIZE OF THE LARGEST END OF THE REDUCER.

G. CONTRACTOR SHALL HAVE FLORIDA LICENSED PROFESSIONAL ENGINEER VERIFY ALL THE RESTRAINED LENGTHS SHOWN IN THE TABLE ABOVE ARE ADEQUATE FOR ALL VARYING SOIL CONDITIONS ON THE PROJECT. THE CONTRACTOR'S ENGINEER SHALL PROVIDE A SIGNED AND SEALED STATEMENT THAT ALL PIPING WAS INSTALLED IN ACCORDANCE WITH THE REQUIREMENTS OF THE TABLE ABOVE OR IN ACCORDANCE WITH THE FINDINGS OF THE CONTRACTOR'S PROFESSIONAL ENGINEER, WHICHEVER ARE MORE STRINGENT. CONTRACTOR'S COST FOR MEETING THESE REQUIREMENTS SHALL BE INCLUDED IN THEIR BID.

H. FOR CONNECTION OF PIPING TO EXISTING PIPING, WHEN THE REQUIRED RESTRAINED JOINT PIPE LENGTHS TO PREVENT PIPE MOVEMENT CANNOT BE ATTAINED IN ACCORDANCE WITH RESTRAINED JOINT SCHEDULE, THE APPROPRIATE TEE, VALVES, BEND AND/OR CROSS FITTING(S) SHALL BE FULLY RESTRAINED IN ACCORDANCE WITH THRUST BLOCK DETAIL (3 / C9) TO PREVENT PIPE MOVEMENT.

J. WHERE HDD CONNECT TO PUSH-ON JOINT PIPING, THIS CONNECTION SHALL BE TREATED AS DEAD END W/ RESPECT TO THE RESTRAINED JOINT SCHEDULE.

RESTRAINED JOINT SCHEDULE (2 / C9)

NTS

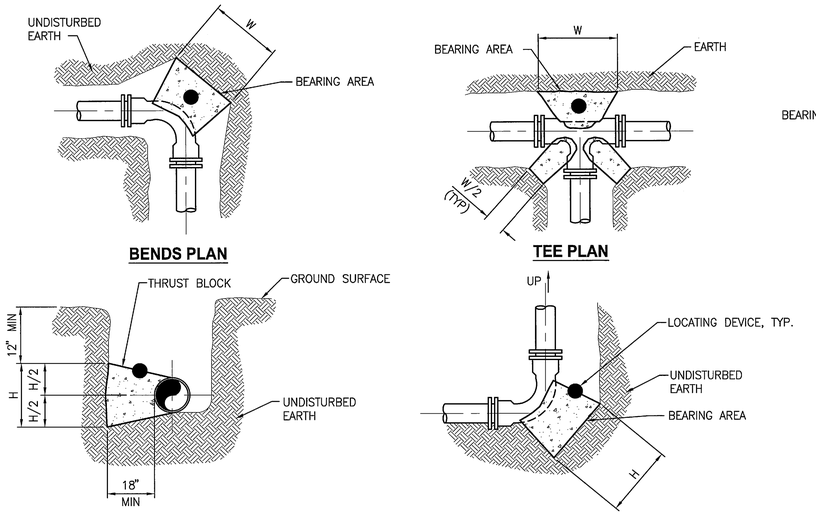

BENDS PLAN

TEE PLAN

CROSS PLAN

ILLUSTRATIVE SECTION

BENDS IN SECTION

REACTION BLOCK BEARING AREA DIMENSIONS					
FITTING	11 1/4° BEND	22 1/2° BEND	45° BEND	90° BEND	TEE/CROSS/ PLUGS/CAPS
SIZE (in)	H x W (in)	H x W (in)	H x W (in)	H x W (in)	H x W (in)
4	11x11	15x15	21x21	28x28	33x33
6	15x15	22x22	30x30	41x41	48x48
8	19x19	26x26	36x36	49x49	59x59
10	22x22	30x30	42x42	57x57	68x68
12	24x24	34x34	47x47	64x64	76x76
14	27x27	37x37	52x52	70x70	84x84
16	29x29	40x40	56x56	76x76	91x91
24	36x36	51x51	71x71	97x97	115x115

REACTION BLOCK NOTES

A. BASED ON 100 PSI PRESSURE & 1500 PSF SOIL BEARING VALUE, 2.0 SAFETY FACTOR, WATER TABLE BELOW THE THRUST BLOCK, VERTICAL BLOCK FACE, AND A MINIMUM THICKNESS OF 18 INCHES.

B. BEARING AREAS FOR PLUGS SHALL BE THE SAME AS FOR TEES.

C. FORM REACTION BLOCKS TO KEEP CONCRETE CLEAR OF JOINTS AND BOLTS.

D. REQUIRED REACTION BLOCK BEARING AREA SHALL BE PLACED AGAINST UNDISTURBED MATERIAL. WHERE TRENCH WALL HAS BEEN DISTURBED, EXCAVATE ALL LOOSE MATERIAL AND EXTEND REACTION BLOCK TO UNDISTURBED MATERIAL.

E. PLACE PRESSURE TREATED WOOD BOARDS IN FRONT OF PLUG, AT TEE, CROSS OR END OF PIPE BEFORE POURING CONCRETE REACTION BLOCK.

F. BACKFILL SHALL CONSIST ENTIRELY OF CLEAN SAND AND ROCK FRAGMENTS. ANY MUCK ENCOUNTERED SHALL BE REPLACED WITH BACKFILL COMPACTED TO 95% MODIFIED PROCTOR MAXIMUM DRY DENSITY, ASTM D1557.

G. CONTRACTOR TO OBTAIN LOCATING DEVICES AND TO EMBED THE DEVICE INTO THE TOP SURFACE ON THE THRUST BLOCK SUCH THAT HALF THE DEVICE IS EXPOSED AND THE LOCATION IS AT THE CENTROID OF THE THRUST BLOCK TOP SURFACE AREA. THE LOCATING DEVICES SHALL BE OMNI MARKER MODEL 161 WATER MARKER OR APPROVED EQUAL.

TYPICAL REACTION BLOCK (THRUST BLOCK) DETAILS (3 / C9)

NTS

THIS SPACE RESERVED

SYM	ZONE	DESCRIPTION	DATE	APPROVED
A		ADDED SHEET - INITIAL RELEASE TO EOR	12/05/11	KMM

REVISIONS

THIS DRAWING CREATED IN AUTOCAD 2010 FILE FORMAT AND WILL BE REVISED ONLY ON AN AUTOCAD SYSTEM. FILE: 14000189-DP5-C09.DWG

JONES EDMUNDS
730 NE WALDO ROAD, GAINESVILLE, FLORIDA 32641 / (352) 377-5821
3910 S WASHINGTON AVE, SUITE 210, TITUSVILLE, FLORIDA 32780 / (321) 269-2950

SIGNATURES	DATE
DRAWN J. ALLEN	12/05/11
CHECKED U. ROSARIO	12/05/11
SUBMITTED W. NICKEL	12/05/11
ST of LICENSURE: FL LICENSE NO: 68638	
APPROVED M. CLARK	12/5/11
K. MILLER	12/5/11

NATIONAL AERONAUTICS AND SPACE ADMINISTRATION
JOHN F. KENNEDY SPACE CENTER, NASA
KENNEDY SPACE CENTER, FLORIDA

REVITALIZE WATER & WASTEWATER SYSTEMS - VOLUME 5 OF 5
W1 PUMP STATION REPLACEMENT

CIVIL DETAILS

FILE NO.	SIZE	DWG. NO.	REV
	F	79K38877 VOL 5	A

PROJ. NO. 96968.3 SHEET 14

C9

SC FORM 1-11 (3/76)(C/G 3/94)

NOTICE: When Government drawings, specifications, or other data are used for any purpose other than in connection with a definitely related Government procurement operation, the United States Government thereby incurs no responsibility nor obligation whatsoever; and the fact that the Government may have formulated, furnished, or in any way supplied the said drawings, specifications or other data is not to be regarded by implication or otherwise as in any manner licensing the holder or any other person or corporation, or conveying any rights or permission to manufacture, use, or sell any patented invention that may in any way be related thereto.

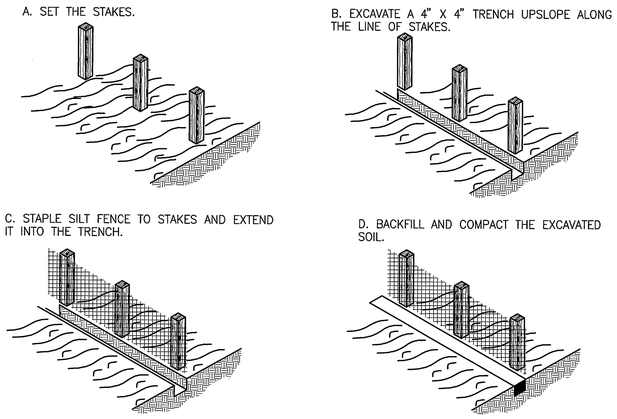

CONSTRUCTION OF A SILT FENCE DETAIL 1
NTS C10

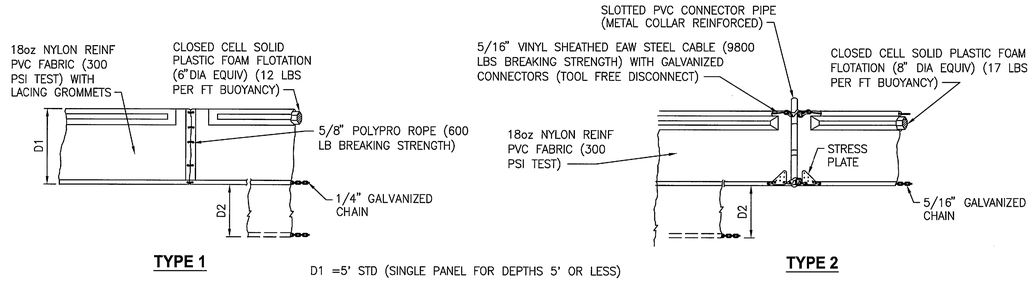

D1 =5' STD (SINGLE PANEL FOR DEPTHS 5' OR LESS)

D2 =5' STD (ADDITIONAL PANEL FOR DEPTHS 5')

CURTAIN TO REACH BOTTOM UP TO DEPTHS OF 10 FEET. TWO (2) PANELS TO BE USED FOR DEPTHS GREATER THAN 10 FEET UNLESS SPECIAL DEPTH CURTAINS SPECIFICALLY CALL FOR IN THE PLANS OR AS DETERMINED BY THE ENGINEER.

NOTICE: COMPONENTS OF TYPES 1 AND 2 MAY BE SIMILAR OR IDENTICAL TO PROPRIETARY DESIGNS. ANY INFRINGEMENT ON THE PROPRIETARY RIGHTS OF THE DESIGNER SHALL BE THE SOLE RESPONSIBILITY OF THE USER. SUBSTITUTIONS FOR TYPES 1 AND 2 SHALL BE AS APPROVED BY THE ENGINEER.

TYPICAL FLOATING TURBIDITY BARRIER DETAIL 2
NTS C10

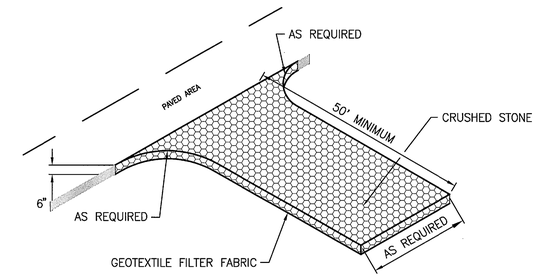

STABILIZED CONSTRUCTION ENTRANCE/EXIT DETAIL 3
NTS C10

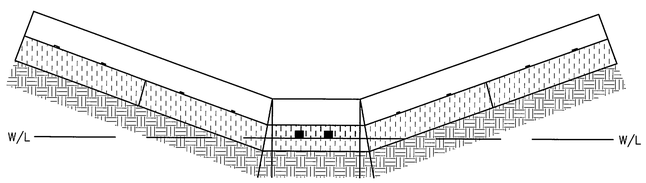

PROPER PLACEMENT OF A STRAW BALE IN A DRAINAGE WAY DETAIL 4
NTS C10

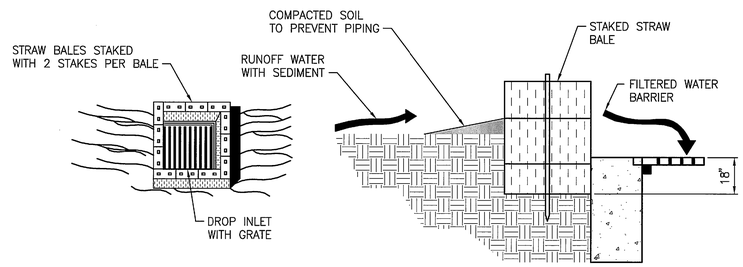

SPECIFIC APPLICATION
THIS METHOD OF INLET PROTECTION IS APPLICABLE WHERE THE INLET DRAINS A RELATIVELY FLAT AREA (SLOPES NO GREATER THAN 5%) WHERE SHEET OR OVERLAND FLOWS (NOT EXCEEDING 5.3 CFS) ARE TYPICAL. THE METHOD SHALL NOT APPLY TO INLETS RECEIVING CONCENTRATED FLOWS, SUCH AS IN STREET OR HIGHWAY MEDIANS.

STRAW BALE DROP INLET SEDIMENT FILTER DETAIL 5
NTS C10

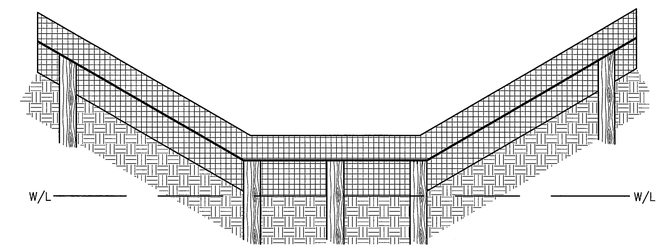

PROPER PLACEMENT OF A SILT FENCE IN A DRAINAGE WAY DETAIL 6
NTS C10

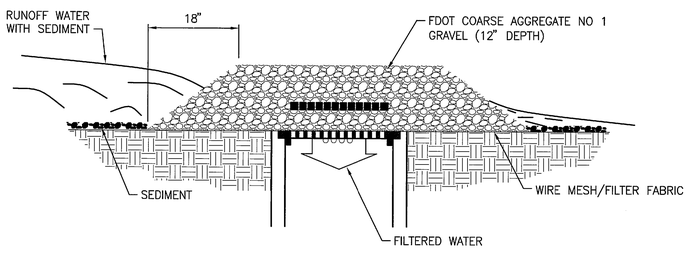

GRAVEL AND WIRE MESH DROP INLET SEDIMENT FILTER DETAIL 7
NTS C10

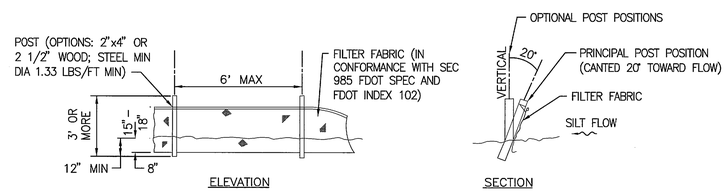

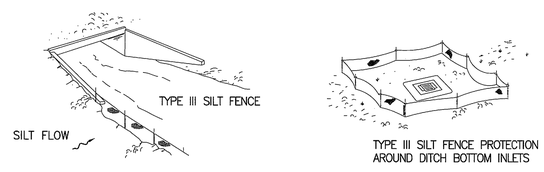

TYPE III SILT FENCE

NOTES:
A. DO NOT DEPLOY IN A MANNER THAT SILT FENCES WILL ACT AS A DAM ACROSS PERMANENT FLOWING WATERCOURSES. SILT FENCES ARE TO BE USED AT UPLAND LOCATIONS AND TURBIDITY BARRIERS USED AT PERMANENT BODIES OF WATER.

B. WHEN JOINING BUTT ENDS OF SILT FENCE FABRIC; JOIN FABRIC ENDS, WRAP AROUND A POST 360-DEGREES, AND SET POST.

FDOT INDEX NUMBER 102 SILT FENCE DETAIL 8
NTS C10

THIS SPACE RESERVED

SYM	ZONE	DESCRIPTION	DATE	APPROVED
A		ADDED SHEET ~ INITIAL RELEASE TO EDL	12/05/11	KM

REVISIONS

THIS DRAWING CREATED IN AUTOCAD 2010 FILE FORMAT AND WILL BE REVISED ONLY ON AN AUTOCAD SYSTEM. FILE: 14000189-DP5-C010.DWG

JONES EDMUNDS
730 NE WALDO ROAD, GAINESVILLE, FLORIDA 32641 / (352) 377-5821
3910 S WASHINGTON AVE, SUITE 210, TITUSVILLE, FLORIDA 32780 / (321) 269-2950

SIGNATURES	DATE
DRAWN J. ALLEN	12/05/11
CHECKED W. LEANHARDT	12/05/11
SUBMITTED R. BEST	12/05/11
ST of LICENSURE: FL LICENSE NO: 69875	
APPROVED M. CLARK	12/5/11
K. MILLER	12/5/11

NATIONAL AERONAUTICS AND SPACE ADMINISTRATION
JOHN F. KENNEDY SPACE CENTER, NASA
KENNEDY SPACE CENTER, FLORIDA

REVITALIZE WATER & WASTEWATER SYSTEMS - VOLUME 5 OF 5
W1 PUMP STATION REPLACEMENT

STORMWATER POLLUTION PREVENTION DETAILS

FILE NO.	SIZE	DWG. NO.	REV
	F	79K38877 VOL 5	A

PROJ. NO. 96968.3 | SHEET 15

C10

NOTICE: When Government drawings, specifications, or other data are used for any purpose other than in connection with a definitely related Government procurement operation, the United States Government thereby incurs no responsibility nor obligation whatsoever; and the fact that the Government may have formulated, furnished, or in any way supplied the said drawings, specifications or other data is not to be regarded by implication or otherwise as in any manner licensing the holder or any other person or corporation, or conveying any rights or permission to manufacture, use, or sell any patented invention that may in any way be related thereto.

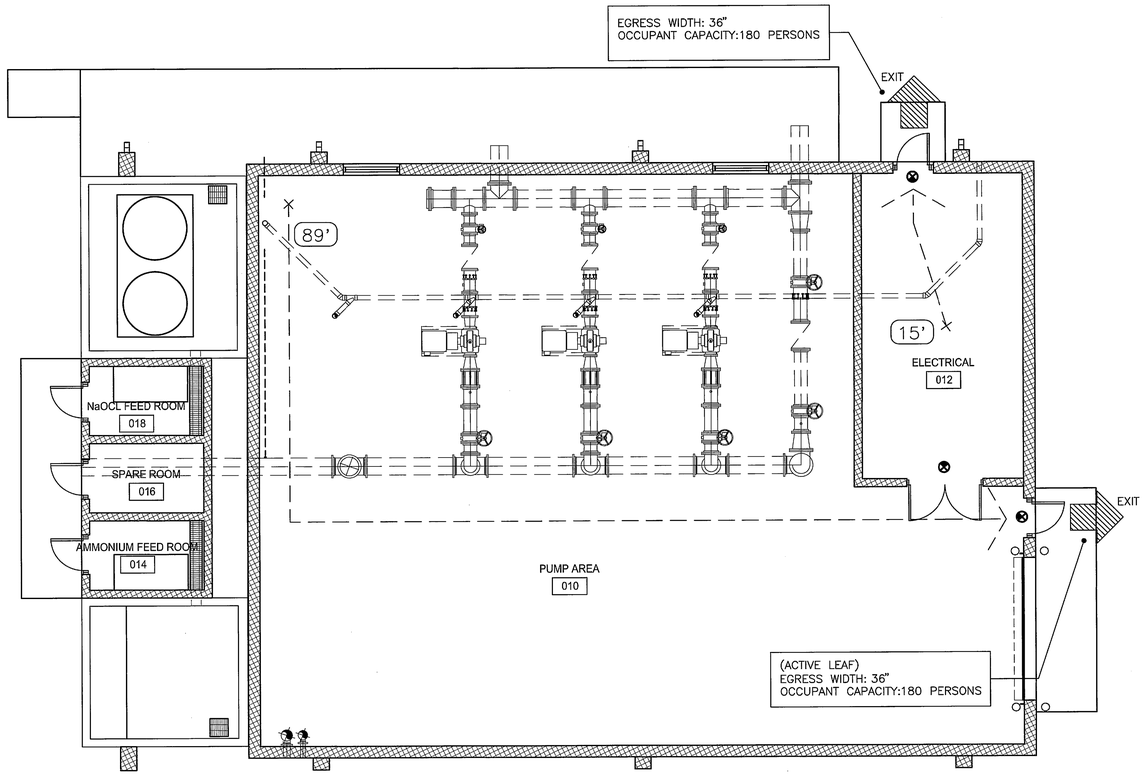

GENERAL NOTES

1. DIMENSIONS:
   - DIMENSIONS FOR OPENINGS, DOORS, WINDOWS AND LOUVERS IN MASONRY WALLS INDICATE NOMINAL MASONRY OPENING WIDTHS, UNLESS NOTED OTHERWISE;
   - DIMENSIONS TO INTERIOR WALLS ARE TO FACE OF FINISH, UNLESS NOTED OTHERWISE.
2. ELEVATION 0'-0" ON ARCHITECTURAL DRAWINGS REFERS TO 6.67' NAVD 88.
3. FOR INTERIOR AND EXTERIOR BUILDING FINISHES SEE DWG A8 AND A10.
4. FOR DOOR SIZES AND TYPES SEE DWG A10.

2007 OCCUPANT LOAD

MINIMUM OCCUPANT LOAD FBC TABLE 1004.1.1

OCCUPANCY	ROOMS	GROSS FLOOR AREA	FLR AREA PER OCCUPANT	OCCUPANT LOAD
GROUP F-3 AREAS	PUMP AREA ("MECHANICAL EQUIPMENT ROOM" IN FBC TABLE)	3,270 SF	200 SF	16

EGRESS CAPACITY

EXIT AND MEANS OF EGRESS WIDTH (FBC TABLE 1005.1)

FLOOR	OCCUPANT LOAD	REQUIRED STAIRWAY WIDTH (FBC TABLE 1 EXCEPTION 1)	DESIGN STAIRWAY WIDTH	STAIRWAY WIDTH CAPACITY 0.3 in PER OCCUPANT (FBC 1005)	REQUIRED DOOR WIDTH 0.2 in PER OCCUPANT)	PROVIDED EXIT DOOR CAPACITY
1	20	-	-	-	4 in	PUMP AREA TWO DOOR LEAVES @ 36" = 72" ÷ .2 = 360 PERSONS

MEANS OF EGRESS

CODE/ REGULATION ITEMS	2007 FLORIDA BUILDING CODE
MAX TRAVEL DISTANCE:	GROUP F-3 ANY POINT TO EXIT: 300 FT WITH NO SPRINKLER SYSTEM (FBC TABLE 1016.1)
MAX DEAD END CORRIDOR:	20 FT (FBC 1016.7)
TWO MEANS OF EGRESS REQUIRED	FBC TABLE 1015.1 OCCUPANT LOAD > 50 (PUMP AREAS)

INTERIOR FINISHES

MINIMUM INTERIOR FINISH CLASSIFICATION (FBC TABLE 803.5)

SPRINKLED	GROUP B	GROUP F-3
EXITS	-	CLASS C
EXIT ACCESS	-	CLASS C
OTHER SPACES	-	CLASS C

PLUMBING FIXTURES

MINIMUM NUMBER OF PLUMBING FACILITIES (FBC-PLUMBING TABLE 403.1 & 419.2)

FLOOR	OCCUPANT LOAD	WATER CLOSETS MEN	WATER CLOSETS WOMEN	LAVS	DRINKING FOUNTAINS
1	F-3 = 20	1 PER 100		1 PER 100	1 PER 100
TOTAL REQUIRED:					
1		0		0	0
PROVIDED:					
1		0		0	0

LIFE SAFETY KEY

SYMBOL	DESCRIPTION
	PRIMARY BUILDING EXIT
	EGRESS PATH TO EXIT FROM REMOTE LOCATION
75'	EGRESS PATH DISTANCE IN FEET FROM REMOTE LOCATION TO EXIT
	EXIT LIGHT

PROJECT DATA - PUMP STATION

PROJECT:	W1 PUMP STATION KENNEDY SPACE CENTER, FLORIDA JONES, EDMUNDS PROJECT NO.: 14000-189-01
DESCRIPTION:	NEW SINGLE-STORY BUILDING FOR WATER TREATMENT PROCESSING
CONTACTS:	CLIENT: NATIONAL AERONAUTICS AND SPACE ADMINISTRATION ARCHITECT/ENGINEER: JONES, EDMUNDS & ASSOCIATES, INC. 3910 S. WASHINGTON AVE., SUITE 210 TITUSVILLE, FL 32780 PHONE: (321) 269-2950 FAX: (321) 269-2951
AUTHORITIES HAVING JURISDICTION	· STATE OF FLORIDA
SIGNIFICANT CODES:	· THE FLORIDA BUILDING CODE, 2007 (FBC) · THE FLORIDA FIRE PREVENTION CODE, 2007 (FFPC) · UNIFORM FEDERAL ACCESSIBILITY STANDARDS (ABA) · OCCUPATIONAL SAFETY AND HEALTH ADMINISTRATION (OSHA) STANDARDS · NFPA 101, LIFE SAFETY CODE (LSC), 2012 EDITION

GENERAL BUILDING LIMITATIONS

CODE/ REGULATION ITEMS	2007 FLORIDA BUILDING CODE
OCCUPANCY:	FACTORY AND INDUSTRIAL, SPECIAL PURPOSE, GROUP F-3: PUMP AREA, 3,900 SF
CONSTRUCTION TYPE:	TYPE II-B, NONCOMBUSTIBLE UNPROTECTED (FBC 602.2 AND TABLE 601)
MAXIMUM ALLOWABLE HEIGHT:	THREE STORIES, 55 FT (FBC TABLE 503, PER MOST RESTRICTIVE CRITERIA, GROUP F-3)
ACTUAL HEIGHT:	28 FT
MAXIMUM ALLOWABLE BUILDING AREA:	23,000 SF PER FLOOR (TABLE 503), WITH NO AREA MODIFICATIONS TAKEN FOR FRONTAGE OR SPRINKLERS
ACTUAL AREAS:	GROSS BUILDING AREA PER FLOOR: 3,900 SF
AUTOMATIC FIRE SPRINKLER:	WET PIPE SYSTEM
FIRE ALARM:	FIRE ALARM SYSTEM SHALL BE INSTALLED IN ACCORDANCE WITH NFPA 101-9.6

FIRE RESISTANT SEPARATIONS

CODE/ REGULATION ITEMS	2007 FLORIDA BUILDING CODE
EXIT ACCESS CORRIDOR	N/A

FIRE RESISTANCE RATINGS

CODE/ REGULATION ITEMS	2007 FLORIDA BUILDING CODE CONSTRUCTION TYPE II-B
STRUCTURAL FRAME INCLUDING	SUPPORTING ROOF ONLY - 0 HR (FBC TABLE 601)
BEAMS, GIRDERS, TRUSSES	CONNECTED TO COLUMNS & BRACING: SUPPORTING ROOF ONLY - 0 HR (FBC TABLE 601)
BEARING WALLS EXTERIOR INTERIOR	 0 HR (FBC TABLE 601) 0 HR (FBC TABLE 601)
FLOOR CONSTRUCTION:	0 HRS (FBC TABLE 601)
ROOF CONSTRUCTION: INCLUDING DECK	0 HRS (FBC TABLE 601)

RATINGS FOR EXTERIOR WALLS

FIRE SEPARATION DISTANCE (FBC TABLE 602)	TYPE OF CONSTRUCTION	RATING (HRS)
LESS THAN 5 FT	II-B	1
LESS THAN 10 FT	II-B	1
MORE THAN 20 FT	II-B	0

* FBC 503-1.3 BUILDINGS IN SAME LOT CONSTRUCTED OF THE SAME CONSTRUCTION TYPE: TYPE II B = 0 HOURS

ACTUAL SEPARATION > 20 FT, THEREFORE RATING FOR EXTERIOR WALLS = 0

OCCUPANCY SEPARATIONS

REQUIRED SEPARATION OF OCCUPANCIES IN HOURS (NFPA 101 TBL 6.1.14.4.1)	GROUP B (BUSINESS)	GROUP F-3 (FACTORY/INDUSTRIAL)
	OFFICE, SHOP	PUMP AREA
	NO SEPARATION (PER MIXED USE OCCUPANCY, NON-SEPARATED AREAS, FBC 302.3.1)	

LIFE SAFETY AND ACCESSIBILITY NOTES:

A. A MINIMUM CLEAR AND LEVEL AREA OF 60" x 48" IS REQUIRED FOR ADA ACCESS APPROACH TO ENTRY.

B. ACCESS DOORS FOR INGRESS/ENTRANCE SHALL BE PROVIDED WITH A MINIMUM OF 18" CLEARANCE AT THE LATCH SIDE FROM THE PULL FACE OF THE DOOR.

C. ACCESS DOORS FOR EGRESS/EXIT SHALL BE PROVIDED WITH A MINIMUM OF 12" CLEARANCE AT THE LATCH SIDE FROM THE PUSH FACE OF THE DOOR.

D. MAXIMUM 1/2" VERTICAL HEIGHT AT THRESHOLD TRANSITIONS, TYPICAL.

E. ACCESS DOORS FOR INGRESS SHALL BE PROVIDED WITH A MINIMUM OF 12" CLEARANCE AT THE LATCH SIDE FROM THE PUSH FACE OF THE DOOR.

F. ACCESS DOORS FOR EGRESS SHALL BE PROVIDED WITH A MINIMUM OF 18" CLEARANCE AT THE LATCH SIDE FROM THE PULL FACE OF THE DOOR.

THIS SPACE RESERVED

SYM	ZONE	DESCRIPTION	DATE	APPROVED
A		ADDED SHEET - INITIAL RELEASE TO EDC	12/05/11	VGL

REVISIONS

THIS DRAWING CREATED IN AUTOCAD 2010 FILE FORMAT AND WILL BE REVISED ONLY ON AN AUTOCAD SYSTEM. FILE: 14000189-DP5-A01.DWG

JONES EDMUNDS
730 NE WALDO ROAD, GAINESVILLE, FLORIDA 32641 / (352) 377-5821
3910 S WASHINGTON AVE, SUITE 210, TITUSVILLE, FLORIDA 32780 / (321) 269-2950

SIGNATURES	DATE
DRAWN S. HAFERKAMP	12/05/11
CHECKED W. LI	12/05/11
SUBMITTED R. CONSTANTINIDE	12/05/11
ST of LICENSURE: FL LICENSE NO: 13445	
APPROVED M. CLARK	12/5/11
K. MILLER	12/5/11

NATIONAL AERONAUTICS AND SPACE ADMINISTRATION
JOHN F. KENNEDY SPACE CENTER, NASA
KENNEDY SPACE CENTER, FLORIDA

REVITALIZE WATER & WASTEWATER SYSTEMS - VOLUME 5 OF 5
W1 PUMP STATION REPLACEMENT

W-1 PUMP STATION BUILDING LIFE SAFETY PLAN AND REGULATORY DATA

FILE NO.	SIZE	DWG. NO.	REV
	F	79K38877 VOL 5	A

PROJ. NO. 96968.3 | SHEET 16

AMRC
ALPHA MRC
ARCHITECTS & ENGINEERS
LICENSE NO. AA-0016E2 / LICENSE NO. CA0B044 / LICENSE NO. IB-0116E
3265 N. COURTENAY PARKWAY, SUITE 102
MERRITT ISLAND, FLORIDA 32953
(321) 449-9455 * FAX (321) 449-1055

GRAPHIC SCALE
0 2 4 8
SCALE IN FEET
3/16"=1'-0"

A1

NOTICE: When Government drawings, specifications, or other data are used for any purpose other than in connection with a definitely related Government procurement operation, the United States Government thereby incurs no responsibility nor obligation whatsoever; and the fact that the Government may have formulated, furnished, or in any way supplied the said drawings, specifications or other data is not to be regarded by implication or otherwise as in any manner licensing the holder or any other person or corporation, or conveying any rights or permission to manufacture, use, or sell any patented invention that may in any way be related thereto.

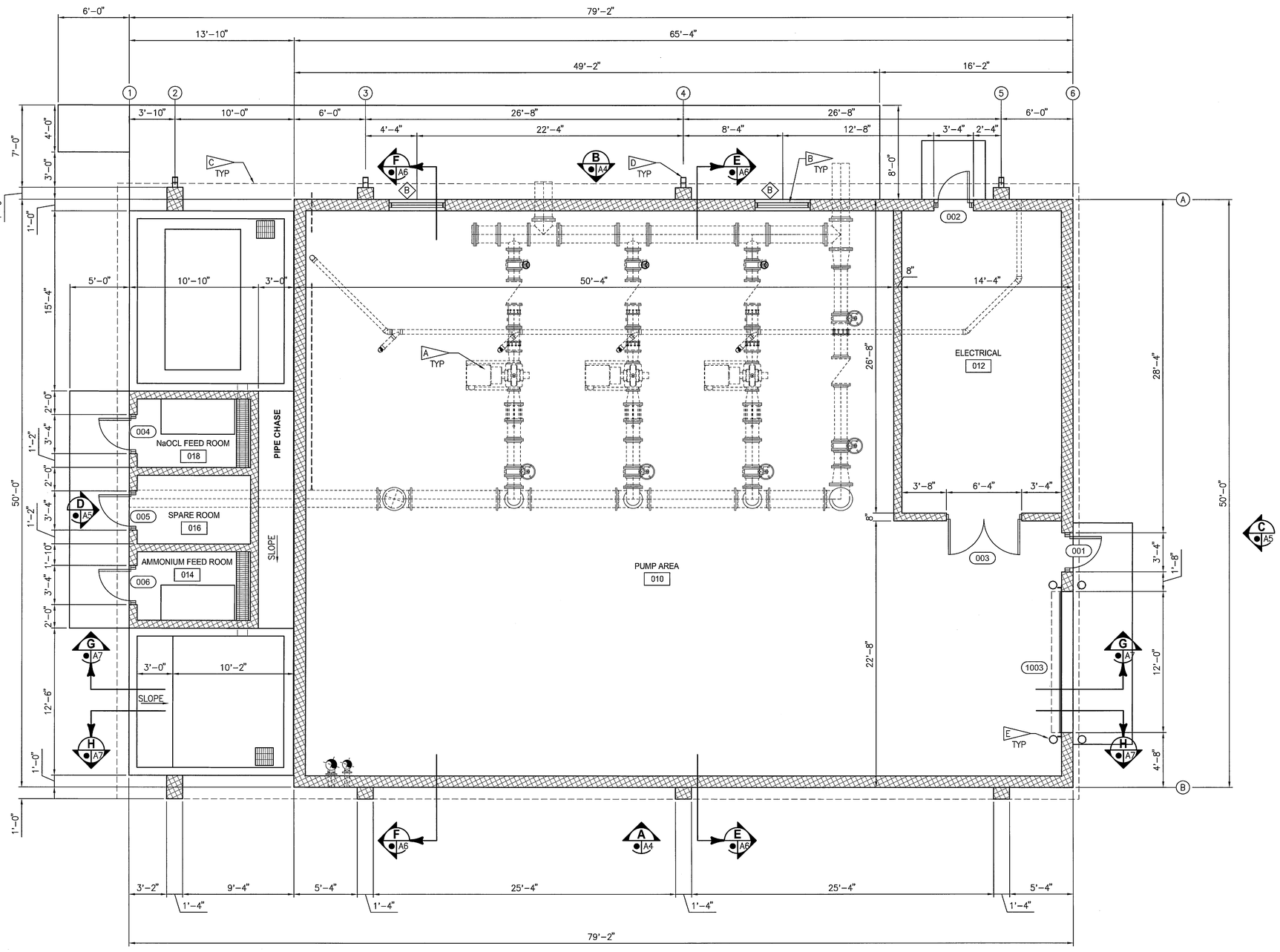

FLOOR PLAN

1/4" = 1'-0"

NOTES

- A — PROCESS EQUIPMENT – REFER TO MECHANICAL
- B — ALUMINUM LOUVER, SEE DWG A11
- C — ROOF SOFFIT AND GUTTER ABOVE
- D — DOWNSPOUT TO PRECAST CONC SPLASH PAD AT GRADE
- E — CONCRETE–FILLED STEEL BOLLARD. REFER TO CIVIL FOR TYPICAL DETAIL.

ARCHITECTURAL LEGEND

- CMU WALL
- CONC WALL
- 010 — ROOM NUMBER
- 002 — DOOR NUMBER
- A — OPENINGS
- 1 — COLUMN GRID

THIS SPACE RESERVED

SYM	ZONE	DESCRIPTION	DATE	APPROVED
A		ADDED SHEET – INITIAL RELEASE TO EDC	12/05/11	

REVISIONS

THIS DRAWING CREATED IN AUTOCAD 2010 FILE FORMAT AND WILL BE REVISED ONLY ON AN AUTOCAD SYSTEM. FILE: 14000189–DP5–A02.DWG

JONES EDMUNDS
730 NE WALDO ROAD, GAINESVILLE, FLORIDA 32641 / (352) 377-5821
3910 S WASHINGTON AVE, SUITE 210, TITUSVILLE, FLORIDA 32780 / (321) 269-2950

SIGNATURES	DATE
DRAWN S. HAFERKAMP	12/05/11
CHECKED W. LI	12/05/11
SUBMITTED R. CONSTANTINIDE	12/05/11
ST of LICENSURE: FL LICENSE NO: 13445	
APPROVED M. CLARK	12/5/11
K.MILLER	12/5/11

NATIONAL AERONAUTICS AND SPACE ADMINISTRATION
JOHN F. KENNEDY SPACE CENTER, NASA
KENNEDY SPACE CENTER, FLORIDA

REVITALIZE WATER & WASTEWATER SYSTEMS - VOLUME 5 OF 5
W1 PUMP STATION REPLACEMENT

W-1 PUMP STATION BUILDING FLOOR PLAN

FILE NO.	SIZE	DWG. NO.	REV
	F	79K38877 VOL 5	A

PROJ. NO. 96968.3 | SHEET 17

AMRC
ALPHA MRC
ARCHITECTS & ENGINEERS
LICENSE NO. AA-03182 / LICENSE NO. CA0004H / LICENSE NO. IB-01162
2265 N. COURTENAY PARKWAY, SUITE 102
MERRITT ISLAND, FLORIDA 32953
(321) 449-9455 * FAX (321) 449-1005

GRAPHIC SCALE
0 1 2 4 8
SCALE IN FEET
1/4"=1'-0"

A2

NOTICE: When Government drawings, specifications, or other data are used for any purpose other than in connection with a definitely related Government procurement operation, the United States Government thereby incurs no responsibility nor obligation whatsoever; and the fact that the Government may have formulated, furnished, or in any way supplied the said drawings, specifications or other data is not to be regarded by implication or otherwise as in any manner licensing the holder or any other person or corporation, or conveying any rights or permission to manufacture, use, or sell any patented invention that may in any way be related thereto.

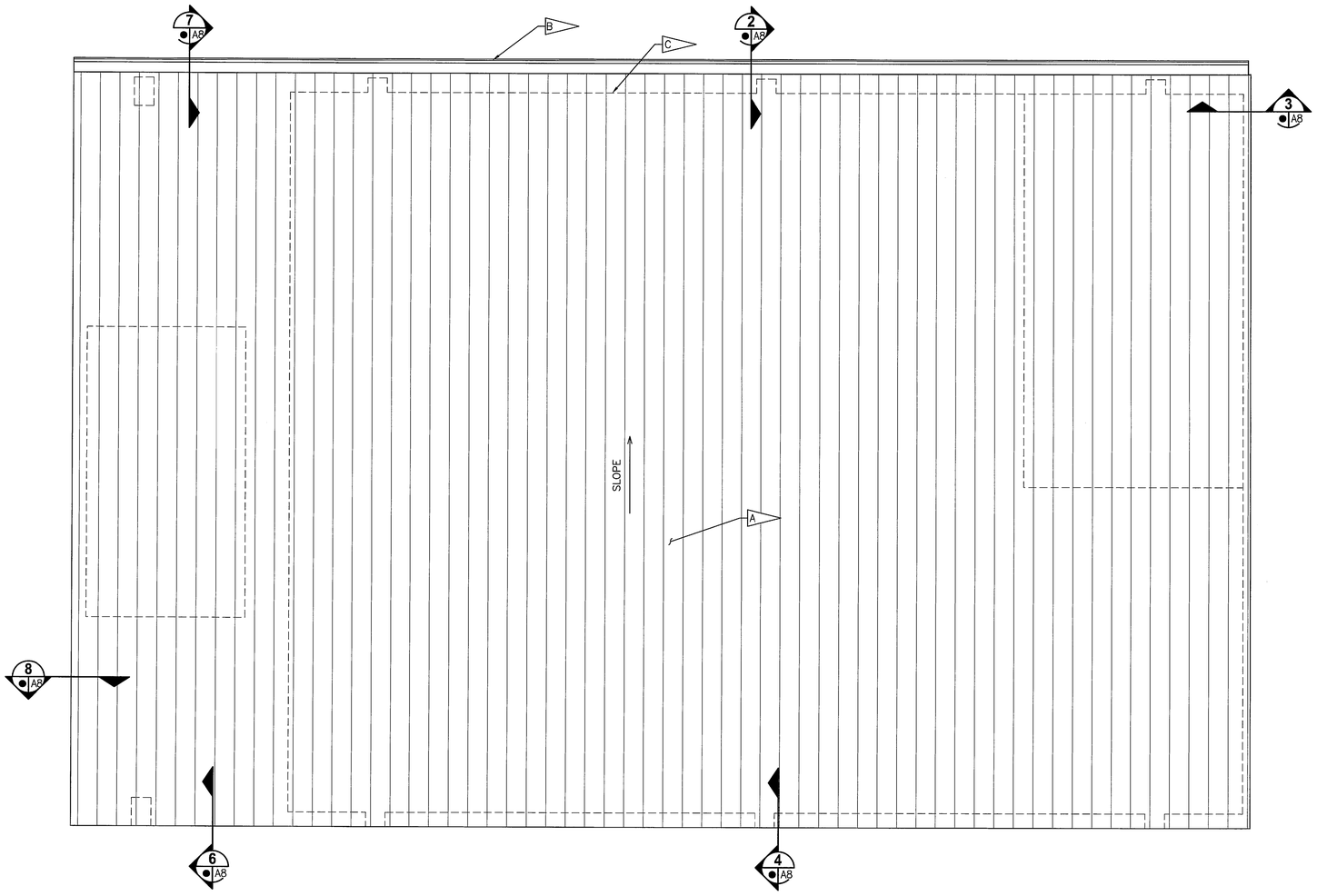

ROOF PLAN

1/4" = 1'-0"

NOTES

A — STANDING SEAM ALUMINUM ROOFING – SEE DETAIL 1 AB

B — METAL GUTTER TO DOWNSPOUT AND PRECAST CONC SPLASH PAD

C — BUILDING FACE

D. SEPARATE DISSIMILAR METALS PER SPECIFICATIONS (TYP)

GRAPHIC SCALE

0 1 2 4 8

SCALE IN FEET
1/4"=1'-0"

AMRC
ALPHA MRC
ARCHITECTS & ENGINEERS
LICENSE NO. AA-03183 / LICENSE NO. CA00044 / LICENSE NO. IB-0182
2395 N. COURTENAY PARKWAY, SUITE 102
MERRITT ISLAND, FLORIDA 32953
(321) 449-9455 * FAX (321) 449-1055

THIS SPACE RESERVED

SYM	ZONE	DESCRIPTION	DATE	APPROVED
A		ADDED SHEET - INITIAL RELEASE TO EDC	12/05/11	

REVISIONS

THIS DRAWING CREATED IN AUTOCAD 2010 FILE FORMAT AND WILL BE REVISED ONLY ON AN AUTOCAD SYSTEM. FILE: 14000189-DP5-A03.DWG

JONES EDMUNDS
730 NE WALDO ROAD, GAINESVILLE, FLORIDA 32641 / (352) 377-5821
3910 S WASHINGTON AVE, SUITE 210, TITUSVILLE, FLORIDA 32780 / (321) 269-2950

SIGNATURES	DATE
DRAWN S. HAFERKAMP	12/05/11
CHECKED W. LI	12/05/11
SUBMITTED R. CONSTANTINIDE	12/05/11
ST of LICENSURE: FL LICENSE NO: 13445	
APPROVED M. CLARK	12/5/11
K. MILLER	12/5/11

NATIONAL AERONAUTICS AND SPACE ADMINISTRATION
JOHN F. KENNEDY SPACE CENTER, NASA
KENNEDY SPACE CENTER, FLORIDA

REVITALIZE WATER & WASTEWATER SYSTEMS - VOLUME 5 OF 5
W1 PUMP STATION REPLACEMENT

W-1 PUMP STATION BUILDING
ROOF PLAN

FILE NO.	SIZE	DWG. NO.	REV
	F	79K38877 VOL 5	A
PROJ. NO. 96968.3		SHEET 18	

A3

NOTICE: When Government drawings, specifications, or other data are used for any purpose other than in connection with a definitely related Government procurement operation, the United States Government thereby incurs no responsibility nor obligation whatsoever; and the fact that the Government may have formulated, furnished, or in any way supplied the said drawings, specifications or other data is not to be regarded by implication or otherwise as in any manner licensing the holder or any other person or corporation, or conveying any rights or permission to manufacture, use, or sell any patented invention that may in any way be related thereto.

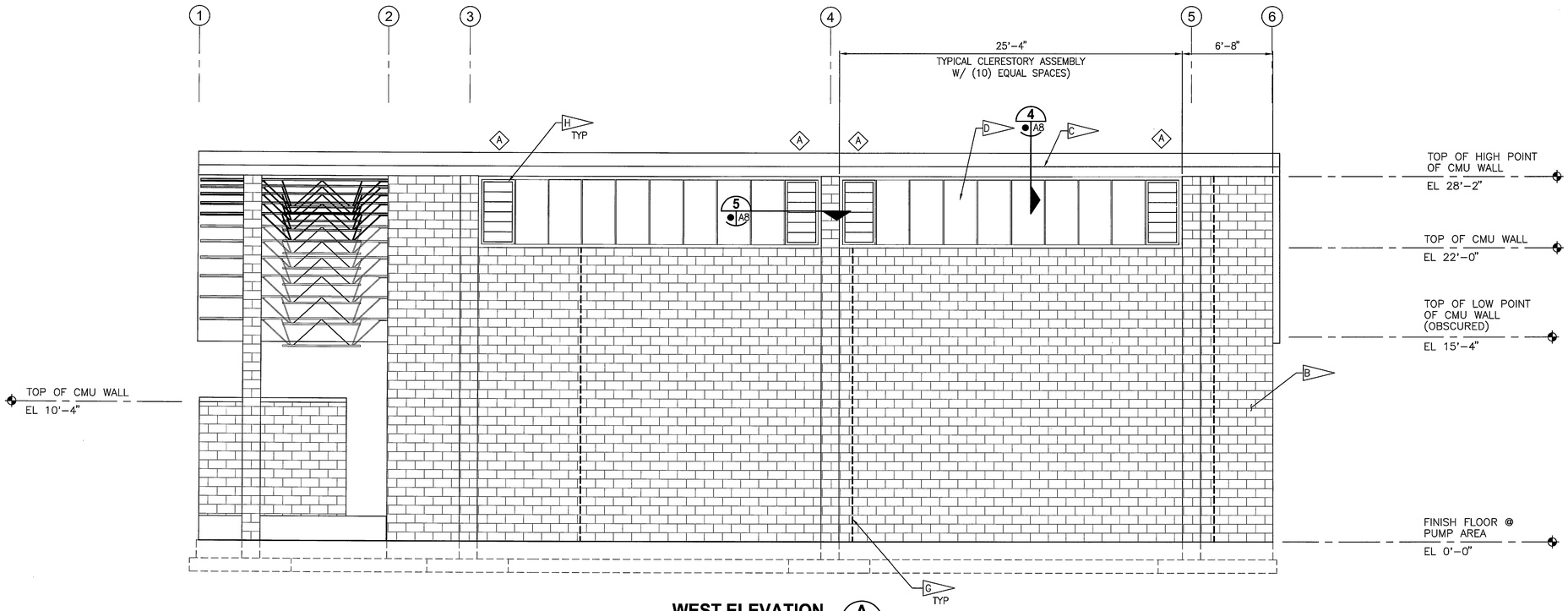

WEST ELEVATION (A)

1/4"=1'-0"

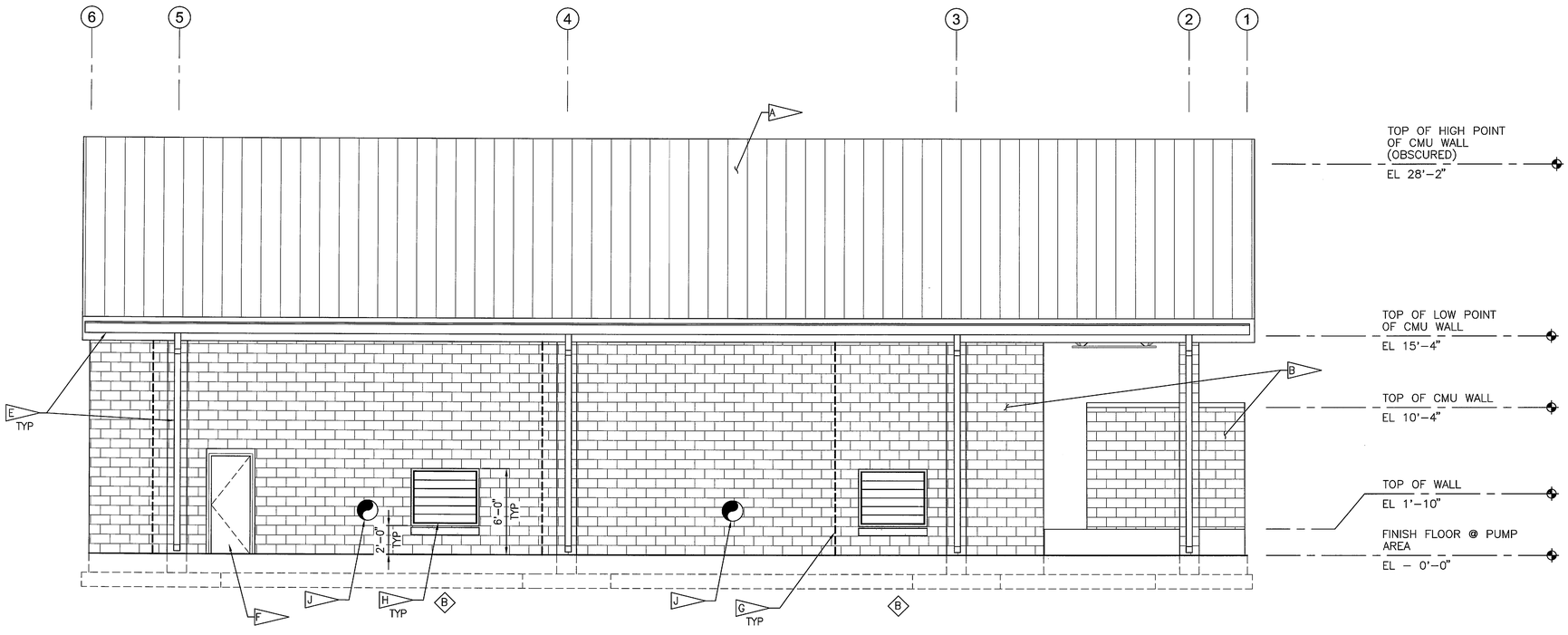

EAST ELEVATION (B)

1/4"=1'-0"

NOTES

- A — STANDING SEAM ALUMINUM ROOFING
- B — CMU WITH TEXTURED COATING
- C — ALUMINUM FASCIA
- D — TRANSLUCENT INSULATED FIBERGLASS PANEL SYSTEM
- E — METAL GUTTER AND DOWNSPOUT TO PRECAST CONC SPLASH PAD AT GRADE
- F — METAL DOOR AND FRAME
- G — MASONRY CONTROL JOINT – REFER TO STRUCTURAL
- H — ALUMINUM LOUVER – REFER TO SCHEDULE – A10
- J — PROVIDE CONTINUOUS SEALANT BEAD AND BACKER AT BOTH SIDES OF WALL AND PENETRATION PER DETAIL (TYP) 16/S4

THIS SPACE RESERVED

SYM	ZONE	DESCRIPTION	DATE	APPROVED
A		ADDED SHEET – INITIAL RELEASE TO EDC	12/05/11	KJM

REVISIONS

THIS DRAWING CREATED IN AUTOCAD 2010 FILE FORMAT AND WILL BE REVISED ONLY ON AN AUTOCAD SYSTEM. FILE: 14000189-DP5-A04.DWG

JONES EDMUNDS
730 NE WALDO ROAD, GAINESVILLE, FLORIDA 32641 / (352) 377-5821
3910 S WASHINGTON AVE, SUITE 210, TITUSVILLE, FLORIDA 32780 / (321) 269-2950

SIGNATURES	DATE
DRAWN S. HAFERKAMP	12/05/11
CHECKED W. LI	12/05/11
SUBMITTED R. CONSTANTINIDE	12/05/11
ST of LICENSURE: FL LICENSE NO: 13445	
APPROVED M. CLARK	12/5/11
K.MILLER	12/5/11

NATIONAL AERONAUTICS AND SPACE ADMINISTRATION
JOHN F. KENNEDY SPACE CENTER, NASA
KENNEDY SPACE CENTER, FLORIDA

REVITALIZE WATER & WASTEWATER SYSTEMS - VOLUME 5 OF 5
W1 PUMP STATION REPLACEMENT

W-1 PUMP STATION BUILDING ELEVATIONS

FILE NO.	SIZE	DWG. NO.	REV
	F	79K38877 VOL 5	A

PROJ. NO. 96968.3 | SHEET 19

AMRC
ALPHA MRC
ARCHITECTS & ENGINEERS
LICENSE NO. AA-03182 / LICENSE NO. CA00044 / LICENSE NO. IB-01162
2355 N. COURTENAY PARKWAY, SUITE 102
MERRITT ISLAND, FLORIDA 32953
(321) 449-9455 * FAX (321) 449-1055

GRAPHIC SCALE
0 1 2 4 8
SCALE IN FEET
1/4"=1'-0"

A4

NOTICE: When Government drawings, specifications, or other data are used for any purpose other than in connection with a definitely related Government procurement operation, the United States Government thereby incurs no responsibility nor obligation whatsoever; and the fact that the Government may have formulated, furnished, or in any way supplied the said drawings, specifications or other data is not to be regarded by implication or otherwise as in any manner licensing the holder or any other person or corporation, or conveying any rights or permission to manufacture, use, or sell any patented invention that may in any way be related thereto.

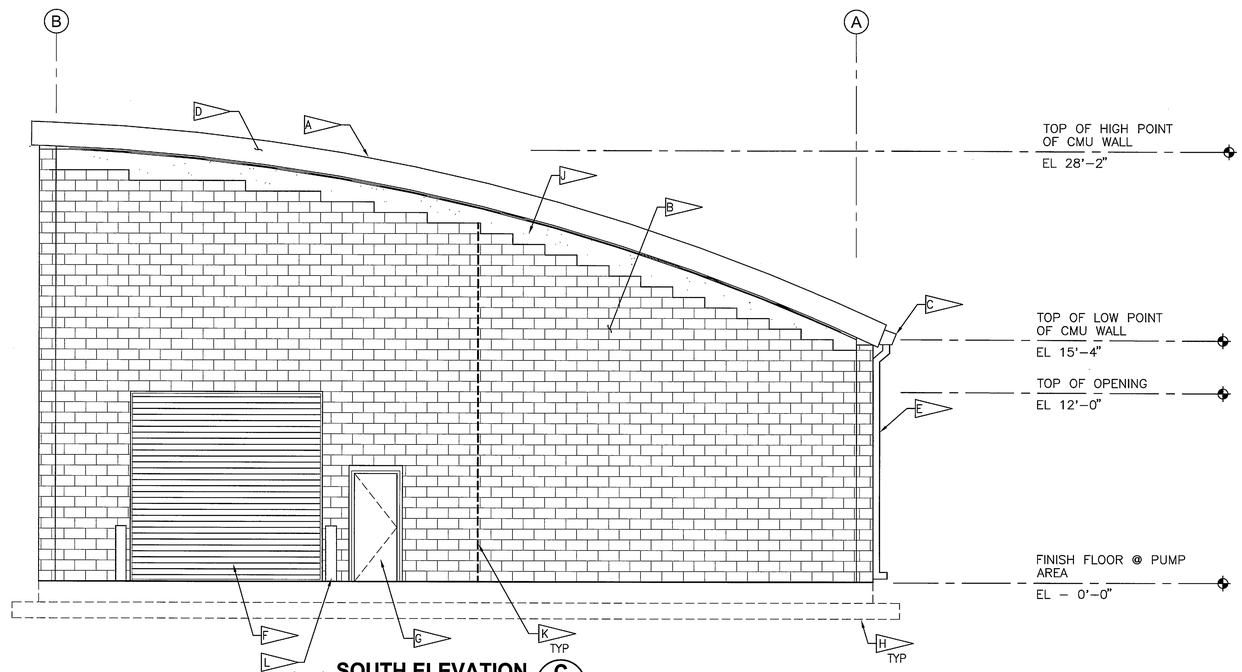

SOUTH ELEVATION C A2 A5
1/4"=1'-0"

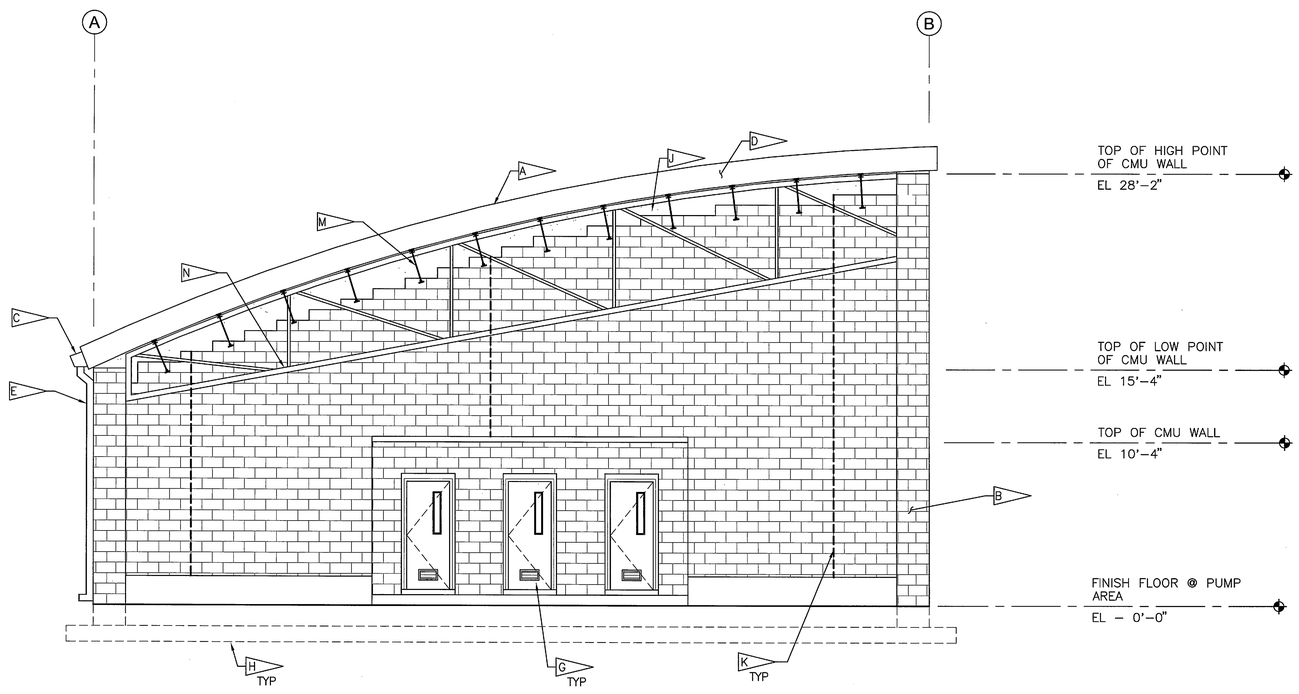

NORTH ELEVATION D A2 A5
1/4"=1'-0"

NOTES

- A — STANDING SEAM ALUMINUM ROOFING
- B — CMU WALL WITH TEXTURED COATING
- C — METAL GUTTER
- D — ALUMINUM FASCIA AND RAKE TRIM, CURVED
- E — METAL DOWNSPOUT
- F — PAINTED METAL OVERHEAD COILING DOOR
- G — METAL DOOR AND FRAME
- H — WALL FOUNDATION AND FOOTING. REFER TO STRUCTURAL.
- J — CONCRETE RAKE BEAM WITH TEXTURED COATING AND INTEGRAL WATER REPELLANT. REFER TO STRUCTURAL.
- K — MASONRY CONTROL JOINT – REFER TO STRUCTURAL
- L — CONCRETE-FILLED STEEL BOLLARD. REFER TO CIVIL FOR TYPICAL DETAIL.
- M — STEEL JOISTS – REFER TO STRUCTURAL
- N — STEEL JOIST GIRDER – REFER TO STRUCTURAL

AMRC
ALPHA MRC
ARCHITECTS & ENGINEERS
LICENSE NO. AA-03192 / LICENSE NO. CA08044 / LICENSE NO. IB-01162
2355 N. COURTENAY PARKWAY, SUITE 102
MERRITT ISLAND, FLORIDA 32953
(321) 449-9455 * FAX (321) 449-5055

GRAPHIC SCALE
0 1 2 4 8
SCALE IN FEET
1/4"=1'-0"

THIS SPACE RESERVED

SYM	ZONE	DESCRIPTION	DATE	APPROVED
A		ADDED SHEET – INITIAL RELEASE TO EDC	12/05/11	[signature]

REVISIONS

THIS DRAWING CREATED IN AUTOCAD 2010 FILE FORMAT AND WILL BE REVISED ONLY ON AN AUTOCAD SYSTEM. FILE: 14000189-DP5-A05.DWG

JONES EDMUNDS
730 NE WALDO ROAD, GAINESVILLE, FLORIDA 32641 / (352) 377-5821
3910 S WASHINGTON AVE, SUITE 210, TITUSVILLE, FLORIDA 32780 / (321) 269-2950

SIGNATURES	DATE
DRAWN S. HAFERKAMP	12/05/11
CHECKED W. LI	12/05/11
SUBMITTED R. CONSTANTINIDE	12/05/11
ST of LICENSURE: FL LICENSE NO: 13445	
APPROVED M. CLARK	12/5/11
K.MILLER	12/5/11

NATIONAL AERONAUTICS AND SPACE ADMINISTRATION
JOHN F. KENNEDY SPACE CENTER, NASA
KENNEDY SPACE CENTER, FLORIDA

REVITALIZE WATER & WASTEWATER SYSTEMS - VOLUME 5 OF 5
W1 PUMP STATION REPLACEMENT

W-1 PUMP STATION BUILDING ELEVATIONS

FILE NO.	SIZE	DWG. NO.	REV
	F	79K38877 VOL 5	A

PROJ. NO. 96968.3 SHEET 20

A5

SC FORM 1-11 (3/76)(C/G 3/94)

NOTICE: When Government drawings, specifications, or other data are used for any purpose other than in connection with a definitely related Government procurement operation, the United States Government thereby incurs no responsibility nor obligation whatsoever; and the fact that the Government may have formulated, furnished, or in any way supplied the said drawings, specifications or other data is not to be regarded by implication or otherwise as in any manner licensing the holder or any other person or corporation, or conveying any rights or permission to manufacture, use, or sell any patented invention that may in any way be related thereto.

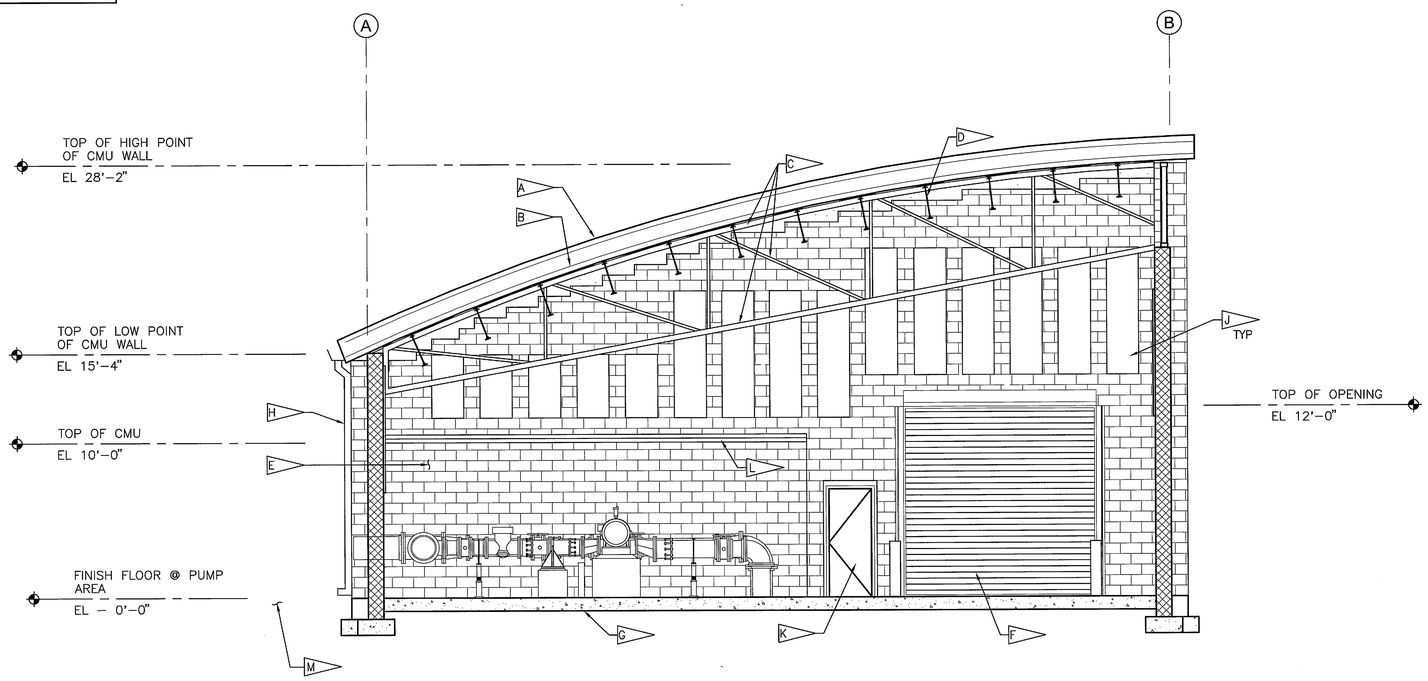

SECTION E (A2 | A6)
1/4" = 1'-0"

NOTES

- A — STANDING SEAM ALUMINUM ROOF ASSEMBLY
- B — METAL DECK – REFER TO STRUCTURAL
- C — STEEL JOIST GIRDER – REFER TO STRUCTURAL
- D — STEEL JOISTS – REFER TO STRUCTURAL
- E — CMU
- F — PAINTED METAL COILING DOOR
- G — CONC SLAB ON GRADE – REFER TO STRUCTURAL
- H — METAL GUTTER AND DOWNSPOUT
- J — ACOUSTICAL WALL PANELS, 2'-0" WIDE BY VARYING HEIGHTS, WITH 12" SPACES BETWEEN PANELS – TOTAL AREA (FOR ALL WALLS) IS APPROXIMATELY 500 SF.
- K — METAL DOOR AND FRAME
- L — CONCRETE SLAB ON METAL DECK ON STEEL FRAMING – REFER TO STRUCTURAL
- M — METER PADS NOT SHOWN FOR CLARITY.

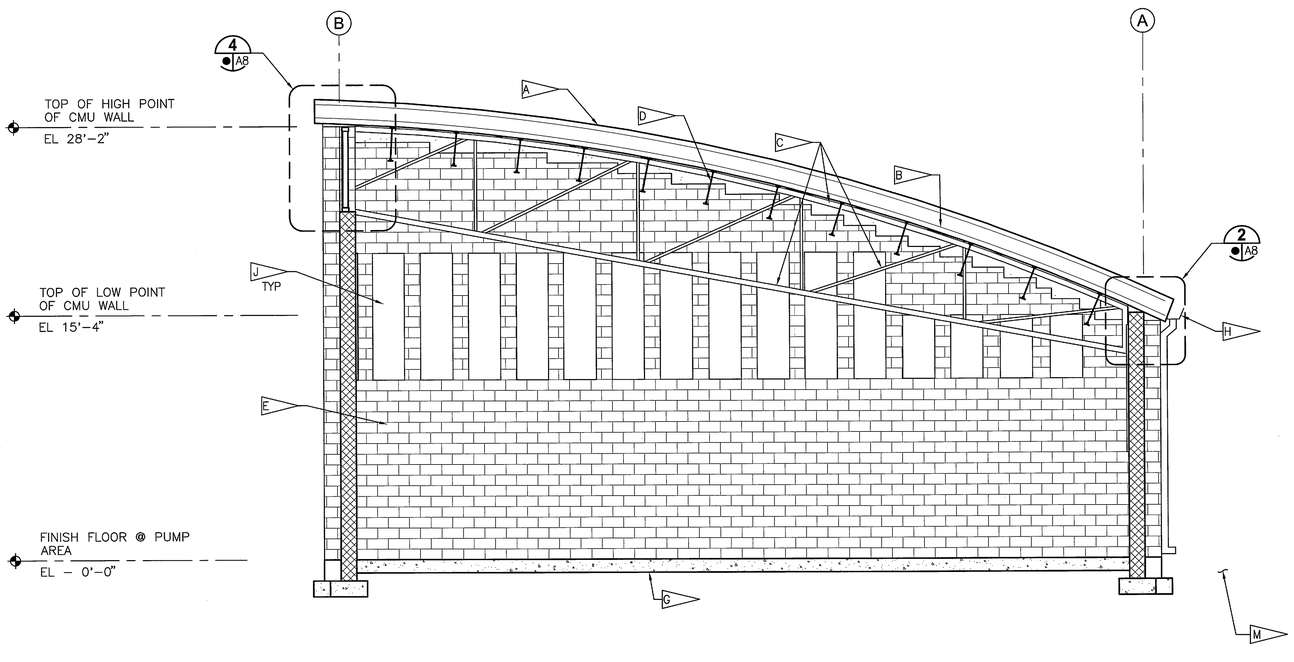

SECTION F (A2 | A6)
1/4" = 1'-0"

AMRC
ALPHA MRC
ARCHITECTS & ENGINEERS
LICENSE NO. AA-03182 / LICENSE NO. CA08044 / LICENSE NO. IB-01162
2395 N. COURTENAY PARKWAY, SUITE 102
MERRITT ISLAND, FLORIDA 32953
(321) 449-9455 * FAX (321) 449-1035

GRAPHIC SCALE
0 1 2 4 8
SCALE IN FEET
1/4" = 1'-0"

A6

THIS SPACE RESERVED

SYM	ZONE	DESCRIPTION	DATE	APPROVED
A		ADDED SHEET ~ INITIAL RELEASE TO EDC	12/05/11	KAM

REVISIONS

THIS DRAWING CREATED IN AUTOCAD 2010 FILE FORMAT AND WILL BE REVISED ONLY ON AN AUTOCAD SYSTEM. FILE: 14000189-DP5-A06.DWG

JONES EDMUNDS
730 NE WALDO ROAD, GAINESVILLE, FLORIDA 32641 / (352) 377-5821
3910 S WASHINGTON AVE, SUITE 210, TITUSVILLE, FLORIDA 32780 / (321) 269-2950

SIGNATURES	DATE
DRAWN S. HAFERKAMP	12/05/11
CHECKED W. LI	12/05/11
SUBMITTED R. CONSTANTINIDE	12/05/11
ST of LICENSURE: FL LICENSE NO: 13445	
APPROVED M. CLARK	12/5/11
K. MILLER	12/5/11

NATIONAL AERONAUTICS AND SPACE ADMINISTRATION
JOHN F. KENNEDY SPACE CENTER, NASA
KENNEDY SPACE CENTER, FLORIDA

REVITALIZE WATER & WASTEWATER SYSTEMS - VOLUME 5 OF 5
W1 PUMP STATION REPLACEMENT
W-1 PUMP STATION BUILDING SECTIONS

FILE NO.	SIZE	DWG. NO.	REV
	F	79K38877 VOL 5	A
PROJ. NO. 96968.3		SHEET 21	

NOTICE: When Government drawings, specifications, or other data are used for any purpose other than in connection with a definitely related Government procurement operation, the United States Government thereby incurs no responsibility nor obligation whatsoever; and the fact that the Government may have formulated, furnished, or in any way supplied the said drawings, specifications or other data is not to be regarded by implication or otherwise as in any manner licensing the holder or any other person or corporation, or conveying any rights or permission to manufacture, use, or sell any patented invention that may in any way be related thereto.

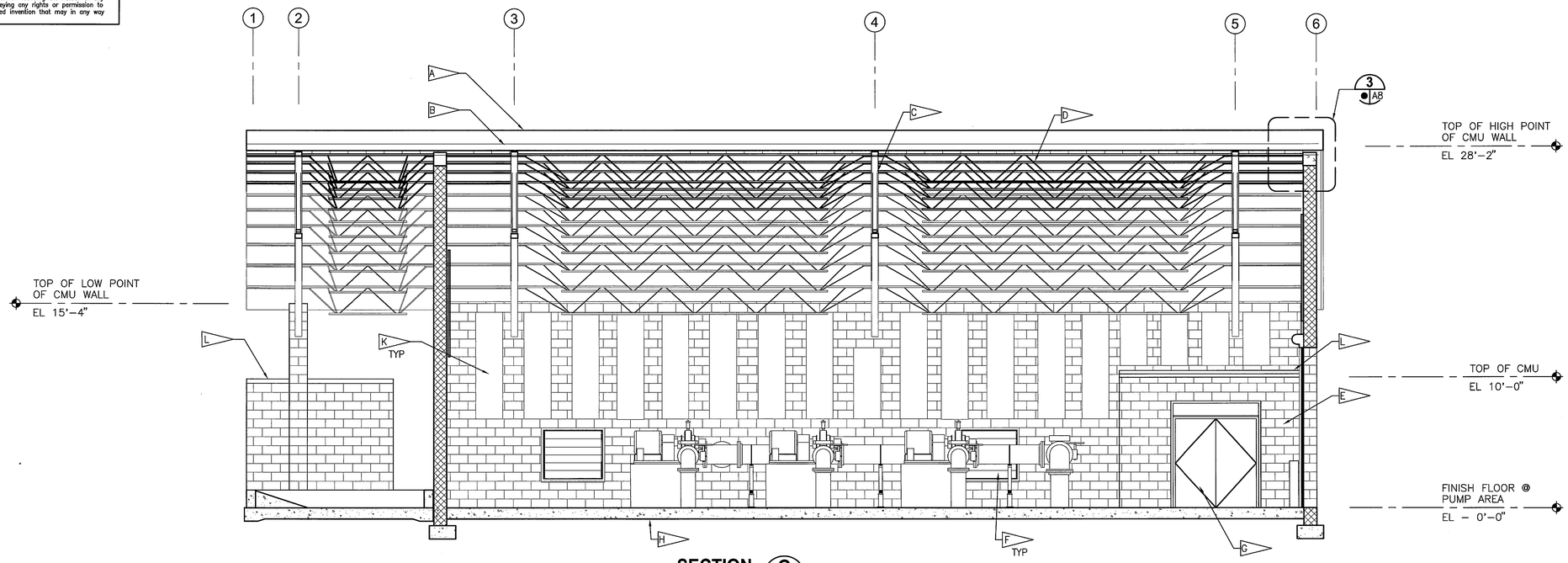

SECTION G
3/16"=1'-0" (A2 | A7)

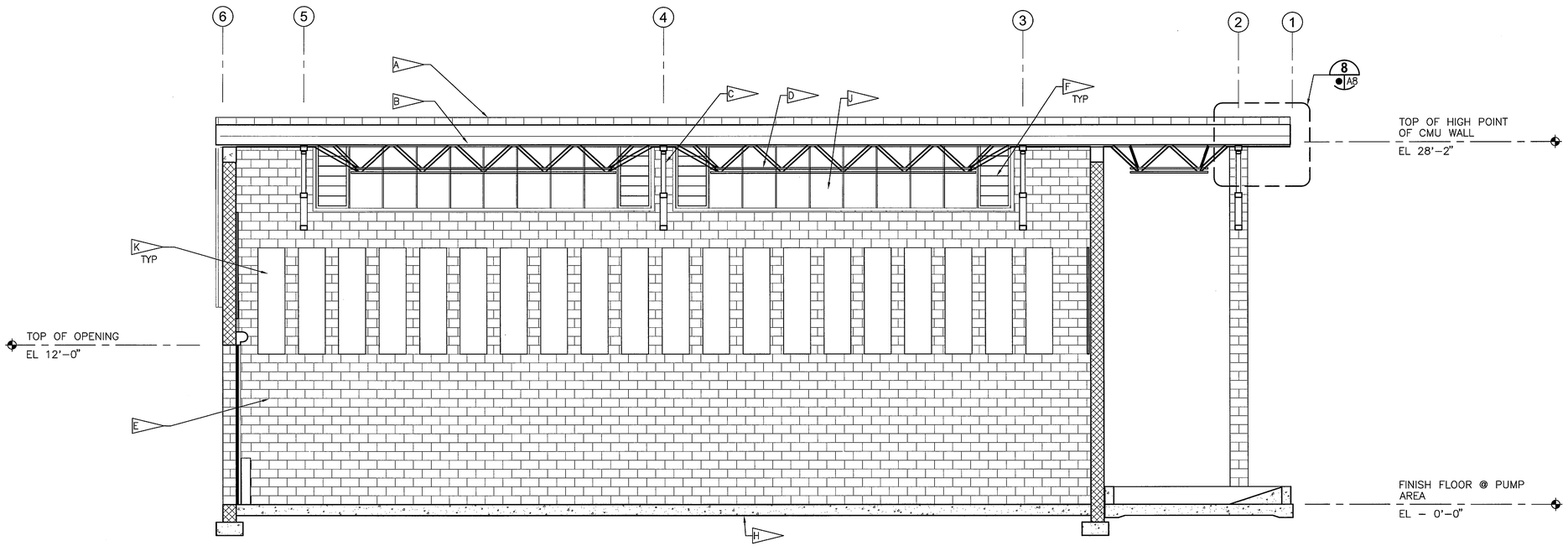

SECTION H
1/4"=1'-0" (A2 | A7)

NOTES

- A — STANDING SEAM ALUMINUM ROOF ASSEMBLY
- B — METAL DECK – REFER TO STRUCTURAL
- C — STEEL JOIST GIRDER – REFER TO STRUCTURAL
- D — STEEL JOISTS – REFER TO STRUCTURAL
- E — CMU
- F — ALUMINUM LOUVER
- G — METAL DOOR AND FRAME
- H — CONC SLAB ON GRADE – REFER TO STRUCTURAL
- J — TRANSLUCENT INSULATED FIBERGLASS PANEL SYSTEM
- K — ACOUSTICAL WALL PANELS, 2'-0" WIDE BY VARYING HEIGHTS, WITH 12" SPACES BETWEEN PANELS.
- L — CONCRETE SLAB ON METAL DECK ON STEEL FRAMING – REFER TO STRUCTURAL
- M. SEE DRAWING A6 FOR ARCHITECTURAL SECTION GENERAL NOTES.

AMRC
ALPHA MRC
ARCHITECTS & ENGINEERS
LICENSE NO. AA-03182 / LICENSE NO. CA00044 / LICENSE NO. IB-01162
2365 N. COURTENAY PARKWAY, SUITE 102
MERRITT ISLAND, FLORIDA 32953
(321) 449-9455 * FAX (321) 449-1055

GRAPHIC SCALE
0 1 2 4 8
SCALE IN FEET
1/4"=1'-0"

A7

THIS SPACE RESERVED

SYM	ZONE	DESCRIPTION	DATE	APPROVED
A		ADDED SHEET - INITIAL RELEASE TO EOC	12/05/11	KM

REVISIONS

THIS DRAWING CREATED IN AUTOCAD 2010 FILE FORMAT AND WILL BE REVISED ONLY ON AN AUTOCAD SYSTEM. FILE: 14000189-DP5-A07.DWG

JONES EDMUNDS
730 NE WALDO ROAD, GAINESVILLE, FLORIDA 32641 / (352) 377-5821
3910 S WASHINGTON AVE, SUITE 210, TITUSVILLE, FLORIDA 32780 / (321) 269-2950

SIGNATURES	DATE
DRAWN S. HAFERKAMP	12/05/11
CHECKED W. LI	12/05/11
SUBMITTED R. CONSTANTINIDE	12/05/11
ST of LICENSURE: FL LICENSE NO: 13445	
APPROVED M. CLARK	12/5/11
K.MILLER	12/5/11

NATIONAL AERONAUTICS AND SPACE ADMINISTRATION
JOHN F. KENNEDY SPACE CENTER, NASA
KENNEDY SPACE CENTER, FLORIDA

REVITALIZE WATER & WASTEWATER SYSTEMS - VOLUME 5 OF 5
W1 PUMP STATION REPLACEMENT
W-1 PUMP STATION BUILDING SECTIONS

FILE NO.	SIZE	DWG. NO.	REV
	F	79K38877 VOL 5	A

PROJ. NO. 96968.3 | SHEET 22

NOTICE: When Government drawings, specifications, or other data are used for any purpose other than in connection with a definitely related Government procurement operation, the United States Government thereby incurs no responsibility nor obligation whatsoever; and the fact that the Government may have formulated, furnished, or in any way supplied the said drawings, specifications or other data is not to be regarded by implication or otherwise as in any manner licensing the holder or any other person or corporation, or conveying any rights or permission to manufacture, use, or sell any patented invention that may in any way be related thereto.

NOTES - EXTERIOR DETAILS

A. MASONRY AND MORTAR SHALL CONTAIN INTEGRAL WATER REPELLANT ADMIXTURE. REFER TO SPECIFICATION SECTION 04230.

B. CAST-IN-PLACE CONCRETE RAKE BEAM SHALL CONTAIN INTEGRAL WATER REPELLANT ADMIXTURE. REFER TO SPECIFICATION SECTION 03300.

C. FOR COVERBOARD UNDERLAYMENT, REFER TO SPECIFICATION SECTION 09250.

D. SEPARATE DISSIMILAR METALS PER SPECIFICATIONS (TYP)

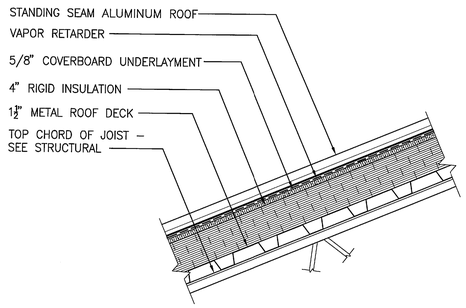

TYPICAL ROOF SECTION 1 (A8)
1 1/2" = 1'-0"

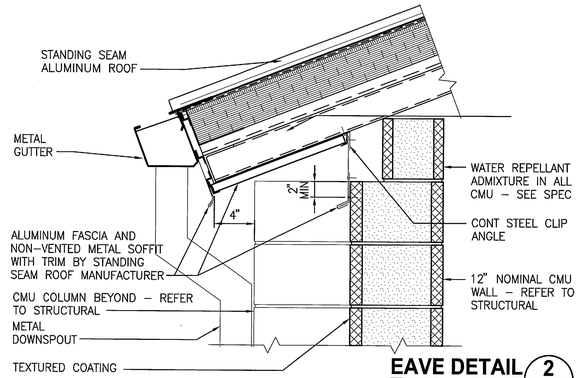

EAVE DETAIL 2 (A8)
1 1/2" = 1'-0"

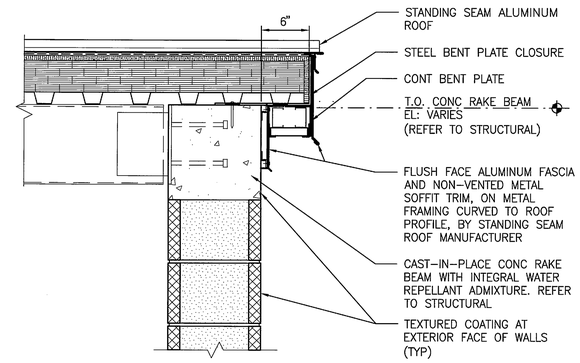

TYPICAL RAKE SECTION 3 (A8)
1 1/2" = 1'-0"

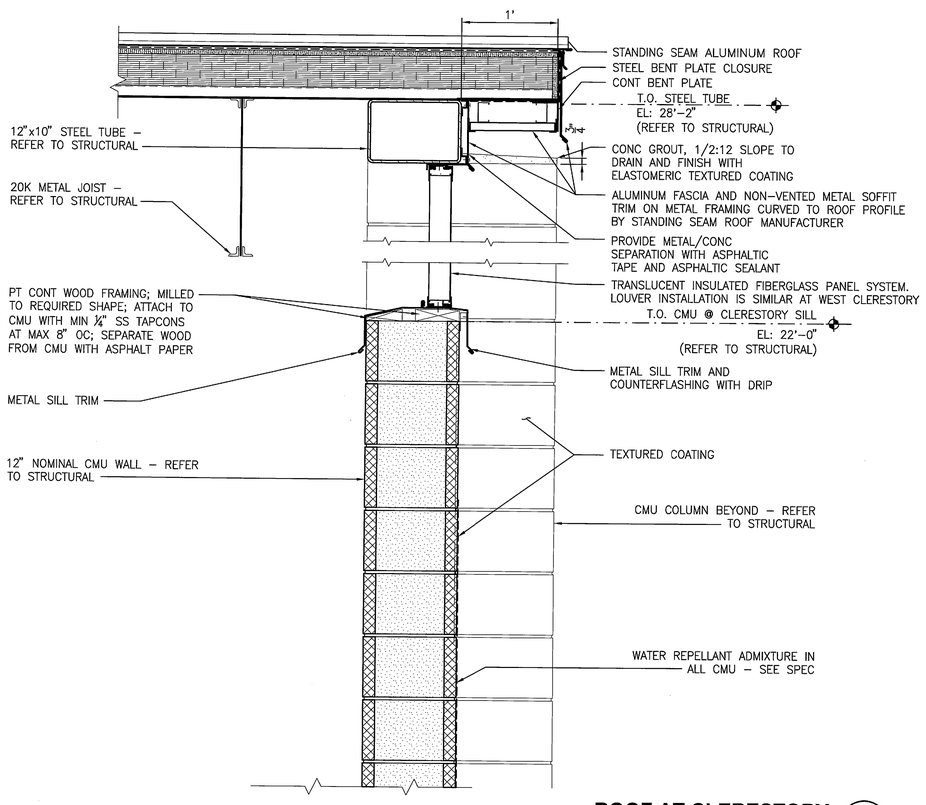

ROOF AT CLERESTORY 4 (A8)
1 1/2" = 1'-0"

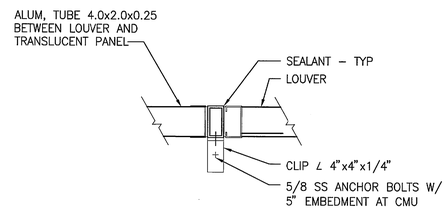

TYPICAL LOUVER / PANEL JAMB 5 (A8)
1 1/2" = 1'-0"

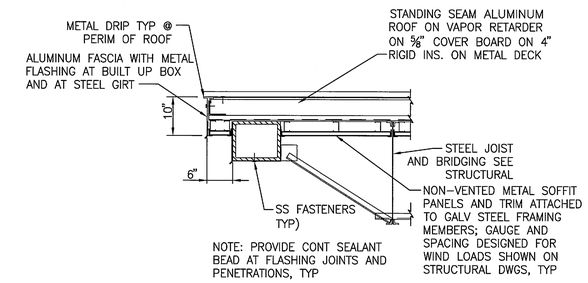

TYP EAVE DETAIL @ H.P. OVERHANG 6 (A8)
1 1/2" = 1'-0"

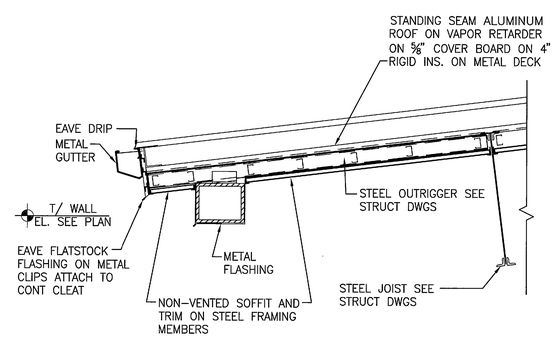

TYP EAVE DETAIL @ L.P. OVERHANG 7 (A8)
1 1/2" = 1'-0"

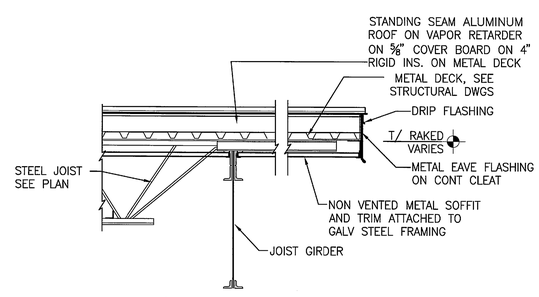

TYP EAVE DETAIL @ RAKE OVERHANG 8 (A8)
1 1/2" = 1'-0"

GRAPHIC SCALE
0 1 2 4
SCALE IN FEET
1/2" = 1'-0"

GRAPHIC SCALE
0 0.5 1 2
SCALE IN FEET
1 1/2" = 1'-0"

AMRC
ALPHA MRC
ARCHITECTS & ENGINEERS
LICENSE NO. AA-0.0183 / LICENSE NO. CA08044 / LICENSE NO. IB-0.0182
2388 N. COURTENAY PARKWAY, SUITE 102
MERRITT ISLAND, FLORIDA 32953
(321) 449-9455 * FAX (321) 449-1055

THIS SPACE RESERVED

SYM	ZONE	DESCRIPTION	DATE	APPROVED
A		ADDED SHEET - INITIAL RELEASE TO EDC	12/05/11	KLM

REVISIONS

THIS DRAWING CREATED IN AUTOCAD 2010 FILE FORMAT AND WILL BE REVISED ONLY ON AN AUTOCAD SYSTEM. FILE: 14000189-DP5-A08.DWG

JONES EDMUNDS
730 NE WALDO ROAD, GAINESVILLE, FLORIDA 32641 / (352) 377-5821
3910 S WASHINGTON AVE, SUITE 210, TITUSVILLE, FLORIDA 32780 / (321) 269-2950

SIGNATURES	DATE
DRAWN S. HAFERKAMP	12/05/11
CHECKED W. LI	12/05/11
SUBMITTED R. CONSTANTINIDE	12/05/11
ST of LICENSURE: FL LICENSE NO: 13445	
APPROVED M. CLARK	12/5/11
K.MILLER	12/5/11

NATIONAL AERONAUTICS AND SPACE ADMINISTRATION
JOHN F. KENNEDY SPACE CENTER, NASA
KENNEDY SPACE CENTER, FLORIDA

REVITALIZE WATER & WASTEWATER SYSTEMS - VOLUME 5 OF 5
W1 PUMP STATION REPLACEMENT

W-1 PUMP STATION BUILDING EXTERIOR DETAILS

FILE NO.	SIZE	DWG. NO.	REV
	F	79K38877 VOL 5	A
PROJ. NO. 96968.3		SHEET 23	

A8

SC FORM 1-11 (3/76)(C/G 3/94)

NOTICE: When Government drawings, specifications, or other data are used for any purpose other than in connection with a definitely related Government procurement operation, the United States Government thereby incurs no responsibility nor obligation whatsoever; and the fact that the Government may have formulated, furnished, or in any way supplied the said drawings, specifications or other data is not to be regarded by implication or otherwise as in any manner licensing the holder or any other person or corporation, or conveying any rights or permission to manufacture, use, or sell any patented invention that may in any way be related thereto.

NOTES

A — EXPOSED STRUCTURE – NO CEILING

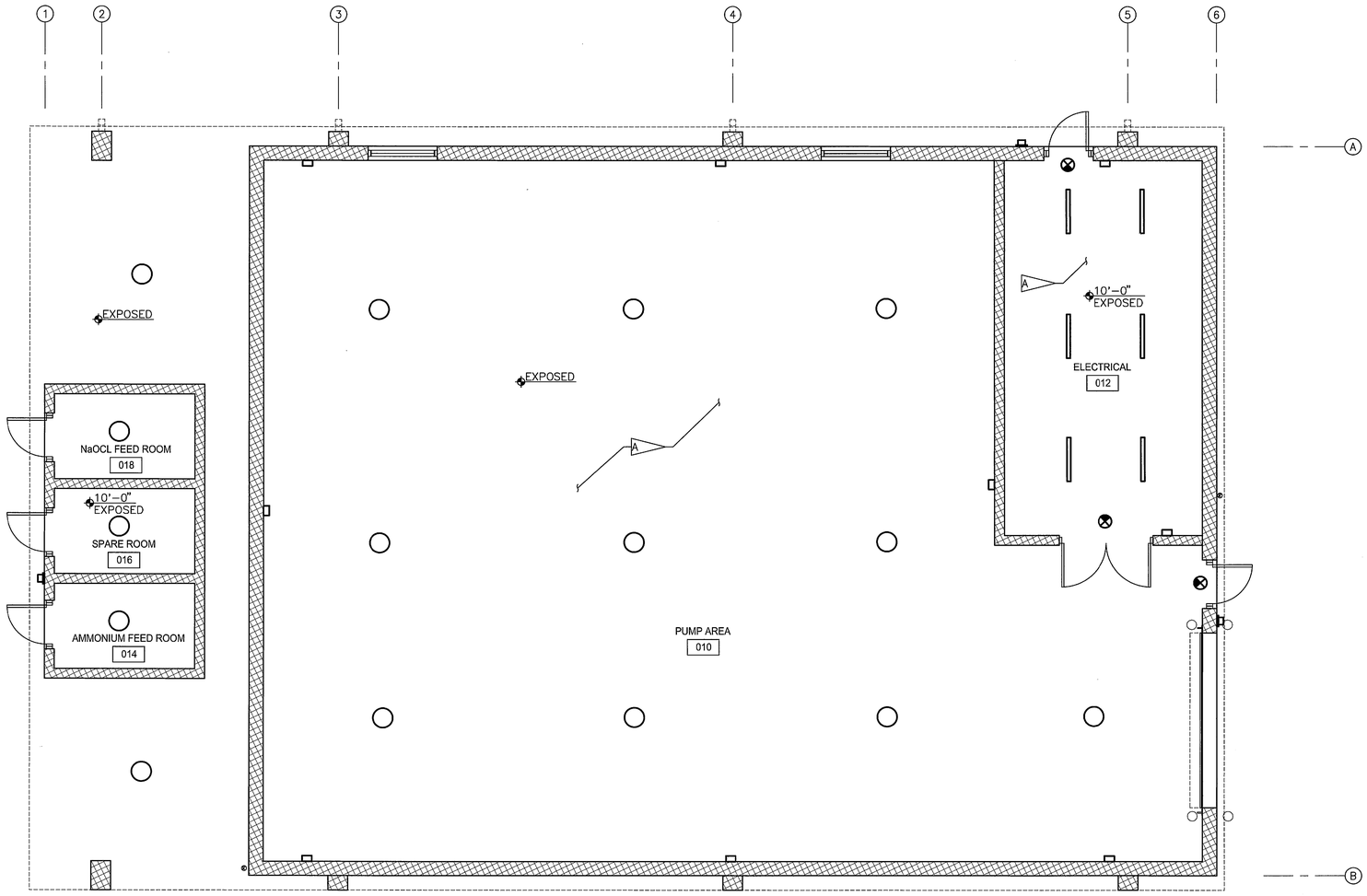

REFLECTED CEILING PLAN

1/4" = 1'-0"

REFLECTED CEILING LEGEND

0'-0"	CEILING ELEVATION ABOVE FINISH FLOOR. COORDINATE WITH FINISH SCHEDULE.
	LIGHT FIXTURE, REFER TO ELECTRICAL
	LIGHT FIXTURE, REFER TO ELECTRICAL
	LIGHT FIXTURE, REFER TO ELECTRICAL
	LIGHT FIXTURE, REFER TO ELECTRICAL
	LIGHT FIXTURE, REFER TO ELECTRICAL

GRAPHIC SCALE

0 1 2 4 8

SCALE IN FEET
1/4" = 1'-0"

AMRC
ALPHA MRC
ARCHITECTS & ENGINEERS
LICENSE NO. AA-03182 / LICENSE NO. CA08044 / LICENSE NO. IB-01102
2355 N. COURTENAY PARKWAY, SUITE 102
MERRITT ISLAND, FLORIDA 32953
(321) 449-9455 * FAX (321) 449-1055

THIS SPACE RESERVED

SYM	ZONE	DESCRIPTION	DATE	APPROVED
A		ADDED SHEET - INITIAL RELEASE TO EDL	12/05/11	KM

REVISIONS

THIS DRAWING CREATED IN AUTOCAD 2010 FILE FORMAT AND WILL BE REVISED ONLY ON AN AUTOCAD SYSTEM. FILE: 14000189-DP5-A09.DWG

JONES EDMUNDS
730 NE WALDO ROAD, GAINESVILLE, FLORIDA 32641 / (352) 377-5821
3910 S WASHINGTON AVE, SUITE 210, TITUSVILLE, FLORIDA 32780 / (321) 269-2950

SIGNATURES	DATE
DRAWN S. HAFERKAMP	12/05/11
CHECKED W. LI	12/05/11
SUBMITTED R. CONSTANTINIDE	12/05/11
ST of LICENSURE: FL LICENSE NO: 13445	
APPROVED M. CLARK	12/5/11
K.MILLER	12/5/11

NATIONAL AERONAUTICS AND SPACE ADMINISTRATION
JOHN F. KENNEDY SPACE CENTER, NASA
KENNEDY SPACE CENTER, FLORIDA

REVITALIZE WATER & WASTEWATER SYSTEMS - VOLUME 5 OF 5
W1 PUMP STATION REPLACEMENT

W-1 PUMP STATION BUILDING
REFLECTED CEILING PLAN

FILE NO.	SIZE	DWG. NO.	REV
	F	79K38877 VOL 5	A

PROJ. NO. 96968.3 | SHEET 24

A9

NOTICE: When Government drawings, specifications, or other data are used for any purpose other than in connection with a definitely related Government procurement operation, the United States Government thereby incurs no responsibility nor obligation whatsoever; and the fact that the Government may have formulated, furnished, or in any way supplied the said drawings, specifications or other data is not to be regarded by implication or otherwise as in any manner licensing the holder or any other person or corporation, or conveying any rights or permission to manufacture, use, or sell any patented invention that may in any way be related thereto.

ROOM FINISH SCHEDULE

ROOM NO	NAME	FLOOR	WALLS AND BULKHEADS				CEILING		NOTES
			N	S	E	W	MATL	HEIGHT	
010	PUMP AREA	CONC-1	CMU	CMU	CMU	CMU	EXP-1	--	--
012	ELECTRICAL	CONC-1	CMU	CMU	CMU	CMU	EXP-1	--	--
014	AMMONIUM FEED ROOM	CONC-1	CMU	CMU	CMU	CMU	EXP-1	--	--
016	SPARE ROOM	CONC-1	CMU	CMU	CMU	CMU	EXP-1	--	--
018	NaOCL FEED ROOM	CONC-1	CMU	CMU	CMU	CMU	EXP-1	--	--

DOOR AND FRAME SCHEDULE

DOOR						FRAME					FIRE RATING LABEL	HDW SET	NOTES
MARK	SIZE		EL	MATL	GLAZING	MATL	EL	DETAIL					
	WIDTH x HEIGHT	THK						HEAD	JAMB	SILL			
001	3'-0" x 7'-0"	1 3/4"	F	ALUM-IN-HD	--	ALUM	1	1/A11	2/A11	3/A11	--	01	MILL FINISH, FLUSH FACE, VERTICALLY RIBBED, EMBOSSED
002	3'-0" x 7'-0"	1 3/4"	F	ALUM-IN-HD	--	ALUM	1	1/A11	2/A11	3/A11	--	01	MILL FINISH, FLUSH FACE, VERTICALLY RIBBED, EMBOSSED
003	PR. 3'-0" x 7'-0"	1 3/4"	N	ALUM-IN-HD	--	ALUM	2	4/A11	5/A11	6/A11	--	02	MILL FINISH, FLUSH FACE, VERTICALLY RIBBED, EMBOSSED
004	3'-0" x 7'-0"	1 3/4"	H	ALUM-IN-HD	ML	ALUM	1	4/A11	5/A11	6/A11	--	01	MILL FINISH, FLUSH FACE, VERTICALLY RIBBED, EMBOSSED
005	3'-0" x 7'-0"	1 3/4"	H	ALUM-IN-HD	ML	ALUM	1	4/A11	5/A11	6/A11	--	01	MILL FINISH, FLUSH FACE, VERTICALLY RIBBED, EMBOSSED
006	3'-0" x 7'-0"	1 3/4"	H	ALUM-IN-HD	ML	ALUM	1	4/A11	5/A11	6/A11	--	01	MILL FINISH, FLUSH FACE, VERTICALLY RIBBED, EMBOSSED
1003	12'-0" x 12'-0"	1"	OC	METAL	--	SF	--	--	--	--	--	--	OVERHEAD COILING DOOR

LOUVER SCHEDULE

MARK	MATERIAL	HEIGHT	WIDTH	THICKNESS
A	PTD ALUM	6'-2" NOM	2'-2" NOM	4" NOM
B	PTD ALUM	4'-0"	4'-0"	4" NOM

NOTES - DOORS & OPENINGS

A. COORDINATE FRAME DIMENSIONS WITH CONCRETE AND MASONRY ROUGH OPENING DIMENSIONS TO ACCOMMODATE REQUIRED CAULK JOINTS.

B. FIELD VERIFY ROUGH OPENING DIMENSIONS PRIOR TO ORDERING OR FABRICATING DOORS AND FRAMES.

C. FOR TYPICAL DETAILS OF LOUVERS AND PANELS IN MASONRY OPENINGS, SEE DETAILS 10/A11 11/A11 12/A11.

D. SEE SPECIFICATIONS FOR CONCRETE FINISHES.

E. TRANSOMS SHALL BE INSULATED METAL PANELS SIMILAR TO DOOR CONSTRUCTION.

F. OVERHEAD COILING DOOR COMPONENTS SHALL BE HOT DIPPED GALVANIZED PER SPECS AND SHALL BE PRIMED AND PAINTED WITH ZINC-RICH PRIMER AND PAINT (3-COAT SYSTEM) WHERE NOT SPECIFIED TO BE GALVANIZED. FASTENERS SHALL BE STAINLESS STEEL.

ABBREVIATIONS LEGEND

INTERIOR WALLS

CMU EXPOSED CMU

FLOORS

CONC-1 CONCRETE, SEALED

CEILINGS

EXP-1 EXPOSED (NO FINISH COATING)

DOORS AND OPENINGS

ALUM-IN-HD ALUM DOOR, INSULATED, HEAVY DUTY REINFORCED, ALUM FRAME

SF STEEL FRAME

ML CLEAR TEMPERED

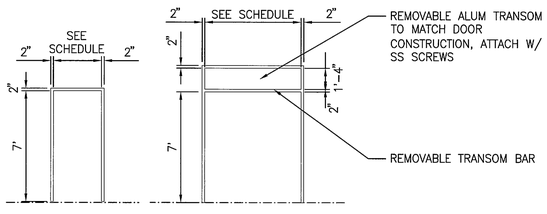

FRAME ELEVATIONS

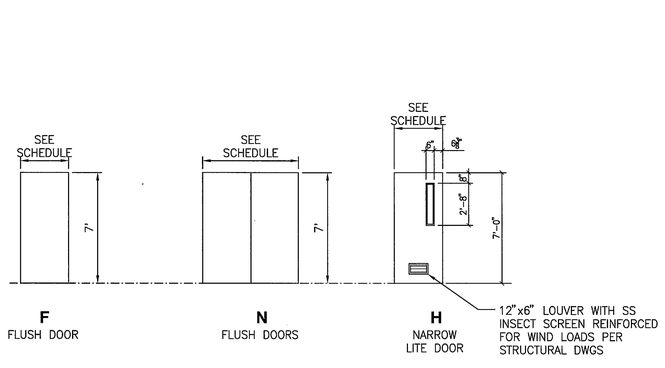

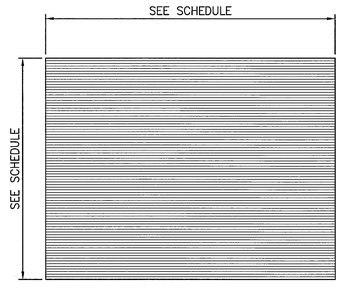

DOOR ELEVATIONS

ROOM FINISH KEY

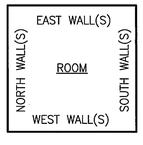

THIS SPACE RESERVED

SYM	ZONE	DESCRIPTION	DATE	APPROVED
A		ADDED SHEET - INITIAL RELEASE TO EDC	12/05/11	KJM

REVISIONS

THIS DRAWING CREATED IN AUTOCAD 2010 FILE FORMAT AND WILL BE REVISED ONLY ON AN AUTOCAD SYSTEM. FILE: 14000189-DP5-A10.DWG

JONES EDMUNDS
730 NE WALDO ROAD, GAINESVILLE, FLORIDA 32641 / (352) 377-5821
3910 S WASHINGTON AVE, SUITE 210, TITUSVILLE, FLORIDA 32780 / (321) 269-2950

SIGNATURES	DATE
DRAWN S. HAFERKAMP	12/05/11
CHECKED W. LI	12/05/11
SUBMITTED R. CONSTANTINIDE	12/05/11
ST of LICENSURE: FL LICENSE NO: 13445	
APPROVED M. CLARK	12/5/11
K.MILLER	12/5/11

NATIONAL AERONAUTICS AND SPACE ADMINISTRATION
JOHN F. KENNEDY SPACE CENTER, NASA
KENNEDY SPACE CENTER, FLORIDA

REVITALIZE WATER & WASTEWATER SYSTEMS - VOLUME 5 OF 5
W1 PUMP STATION REPLACEMENT

W-1 PUMP STATION BUILDING SCHEDULES AND DETAILS

FILE NO.	SIZE	DWG. NO.	REV
	F	79K38877 VOL 5	A

PROJ. NO. 96968.3 SHEET 25

AMRC
ALPHA MRC
ARCHITECTS & ENGINEERS
LICENSE NO. AA-03182 / LICENSE NO. CA08044 / LICENSE NO. IB-01162
2356 N. COURTENAY PARKWAY, SUITE 102
MERRITT ISLAND, FLORIDA 32953
(321) 449-9453 * FAX (321) 449-1055

A10

NOTICE: When Government drawings, specifications, or other data are used for any purpose other than in connection with a definitely related Government procurement operation, the United States Government thereby incurs no responsibility nor obligation whatsoever; and the fact that the Government may have formulated, furnished, or in any way supplied the said drawings, specifications or other data is not to be regarded by implication or otherwise as in any manner licensing the holder or any other person or corporation, or conveying any rights or permission to manufacture, use, or sell any patented invention that may in any way be related thereto.

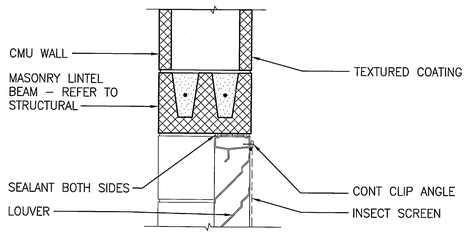

NOTE:
TRANSLUCENT PANEL SIMILAR, FOR LOCATIONS SEE A8.

HEAD DETAIL 10 (1 1/2" = 1'–0") ● A11

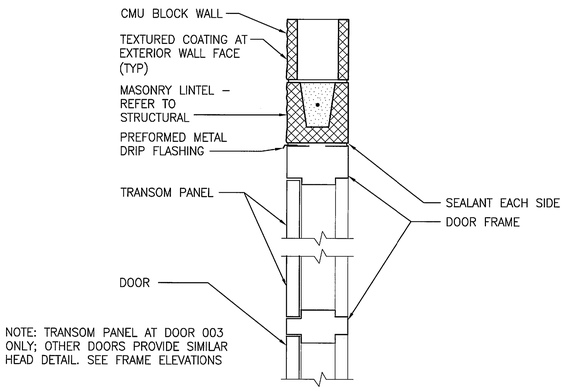

NOTE: TRANSOM PANEL AT DOOR 003 ONLY; OTHER DOORS PROVIDE SIMILAR HEAD DETAIL. SEE FRAME ELEVATIONS

HEAD DETAIL 4 (1 1/2" = 1'–0") ● A11

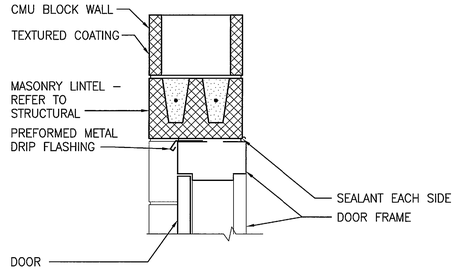

HEAD DETAIL 1 (1 1/2" = 1'–0") ● A11

NOTES - OPENING DETAILS

A. REFER TO DOOR SCHEDULE ON DRAWING A10 FOR DETAIL REFRENCES.

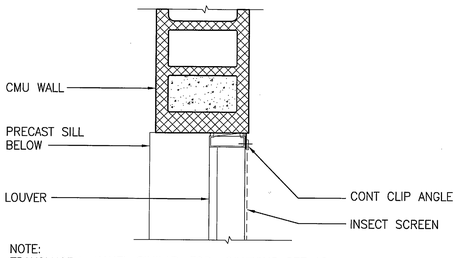

NOTE:
TRANSLUCENT PANEL SIMILAR, FOR LOCATIONS SEE A8.

JAMB DETAIL 11 (1 1/2" = 1'–0") ● A11

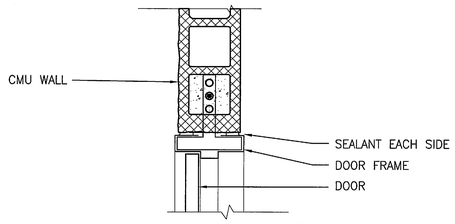

JAMB DETAIL 5 (1 1/2" = 1'–0") ● A11

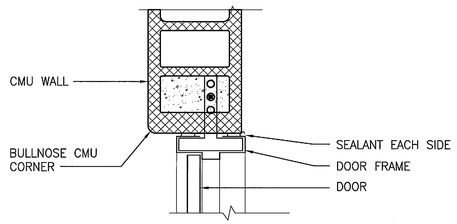

JAMB DETAIL 2 (1 1/2" = 1'–0") ● A11

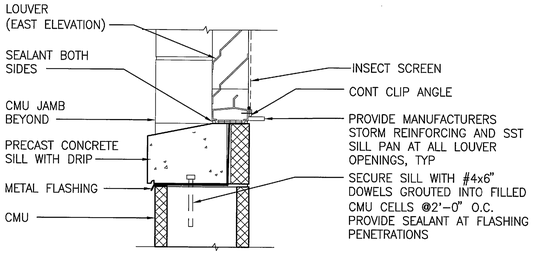

SILL DETAIL 12 (1 1/2" = 1'–0") ● A11

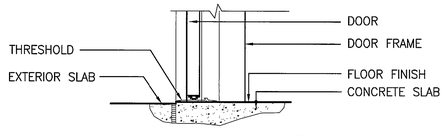

SILL DETAIL 6 (1 1/2" = 1'–0") ● A11

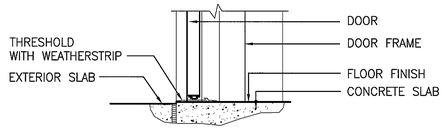

SILL DETAIL 3 (1 1/2" = 1'–0") ● A11

GRAPHIC SCALE

0 0.5 1 2

SCALE IN FEET
1 1/2" = 1'–0"

AMRC
ALPHA MRC
ARCHITECTS & ENGINEERS
LICENSE NO. AA-03182 / LICENSE NO. CA8044 / LICENSE NO. IB-01162
2365 N. COURTENAY PARKWAY, SUITE 102
MERRITT ISLAND, FLORIDA 32953
(321) 449-9455 / FAX (321) 449-1055

THIS SPACE RESERVED

SYM	ZONE	DESCRIPTION	DATE	APPROVED
A		ADDED SHEET – INITIAL RELEASE TO EDC	12/05/11	KM

REVISIONS

THIS DRAWING CREATED IN AUTOCAD 2010 FILE FORMAT AND WILL BE REVISED ONLY ON AN AUTOCAD SYSTEM. FILE: 14000189–DP5–A11.DWG

JONES EDMUNDS
730 NE WALDO ROAD, GAINESVILLE, FLORIDA 32641 / (352) 377-5821
3910 S WASHINGTON AVE, SUITE 210, TITUSVILLE, FLORIDA 32780 / (321) 269-2950

SIGNATURES	DATE
DRAWN S. HAFERKAMP	12/05/11
CHECKED W. LI	12/05/11
SUBMITTED R. CONSTANTINIDE	12/05/11
ST of LICENSURE: FL LICENSE NO: 13445	
APPROVED M. CLARK	12/5/11
K.MILLER	12/5/11

NATIONAL AERONAUTICS AND SPACE ADMINISTRATION
JOHN F. KENNEDY SPACE CENTER, NASA
KENNEDY SPACE CENTER, FLORIDA

REVITALIZE WATER & WASTEWATER SYSTEMS - VOLUME 5 OF 5
W1 PUMP STATION REPLACEMENT

W-1 PUMP STATION BUILDING DETAILS

FILE NO.	SIZE	DWG. NO.	REV
	F	79K38877 VOL 5	A
PROJ. NO. 96968.3		SHEET 26	

A11

NOTICE: When Government drawings, specifications, or other data are used for any purpose other than in connection with a definitely related Government procurement operation, the United States Government thereby incurs no responsibility nor obligation whatsoever; and the fact that the Government may have formulated, furnished, or in any way supplied the said drawings, specifications or other data is not to be regarded by implication or otherwise as in any manner licensing the holder or any other person or corporation, or conveying any rights or permission to manufacture, use, or sell any patented invention that may in any way be related thereto.

STRUCTURAL GENERAL NOTES

ABBREVIATIONS

AA STD	ALUMINUM ASSOCIATION STANDARD
ACI	AMERICAN CONCRETE INSTITUTE
AISI	AMERICAN IRON AND STEEL INSTITUTE
AISC	AMERICAN INSTITUTE OF STEEL CONSTRUCTION
AFF	ABOVE FINISH FLOOR
ALUM	ALUMINUM
ASCE	AMERICAN SOCIETY OF CIVIL ENGINEERS
ASTM	AMERICAN SOCIETY FOR TESTING AND MATERIALS
AWS	AMERICAN WELDING SOCIETY
L	ANGLE
BLDG	BUILDING
BTM	BOTTOM
B/	BOTTOM OF
℄	CENTERLINE
CC	CENTER TO CENTER
CF	COLUMN FOUNDATION
CIP	CAST IN PLACE
CJ	CONTRACTION JOINT
CLR	CLEAR
CMU	CONCRETE MASONRY UNIT
COL	COLUMN
CONC	CONCRETE
CONT	CONTINUOUS
CRSI	CONCRETE REINFORCING STEEL INSTITUTE
DES	DESIGNATION
DET	DETAIL
DIA	DIAMETER
ø	DIAMETER
DN	DOWN
DWG	DRAWING
EA	EACH
EF	EACH FACE
EL	ELEVATION
ELEC	ELECTRICAL
EQ	EQUAL, EQUALLY
EW	EACH WAY
EXIST	EXISTING
EXP JT	EXPANSION JOINT
FDN	FOUNDATION
FG	FIBERGLASS
F/F	FINISH FLOOR
FL	FLOOR
FP	FULL PENETRATION
FRP	FIBERGLASS REINFORCED PLASTIC
FT	FOOT
FT#	FOOT POUNDS
FTG	FOUNDATION
GAL	GALLON
GALV	GALVANIZED
GR	GUARDRAIL
GRTG	GRATING
HK	HOOK
HORIZ	HORIZONTAL
HR	HANDRAIL
HSS	HOLLOW STRUCTURAL SECTION
HT	HEIGHT
ID	INSIDE DIAMETER
IJ	ISOLATION JOINT
LF	LINEAR FEET
KB	KNEE BRACE
kPa	KILOPASCAL
LG	LONG
LL	LIVE LOAD
LLH	LONG LEG HORIZONTAL
LLV	LONG LEG VERTICAL
MAX	MAXIMUM
MCJ	MASONRY CONTROL JOINT
MECH	MECHANICAL
MFG	MANUFACTURER
MIN	MINIMUM
MISC	MISCELLANEOUS
MPD	MODIFIED PROCTOR DENSITY
MPH	MILES PER HOUR
MTL	METAL
N/A	NOT APPLICABLE
NIC	NOT IN CONTRACT
No	NUMBER
OC	ON CENTER(S)
OD	OUTSIDE DIAMETER
OPP H	OPPOSITE HAND
PCF	POUNDS PER CUBIC FEET
ℙ	PLATE
PSF	POUNDS PER SQUARE FOOT
PSI	POUNDS PER SQUARE INCH
#/IN	POUNDS PER INCH
R	RADIUS
REF	REFERENCE (INFORMATION OBTAINED
REQ	REQUIRED
REINF	REINFORCEMENT, REINFORCING
S	SLOPE
SCH	SCHEDULE
SBC	STANDARD BUILDING CODE
SDI	STEEL DECK INSTITUTE
SHT	SHEET
SIM	SIMILAR
SJI	STEEL JOIST INSTITUTE
SP	SPACING, SPACED
SPEC	SPECIFICATIONS, SPECIFIED
SQ	SQUARE
SS	STAINLESS STEEL
STD	STANDARD
STL	STEEL
T/	TOP OF
TOC	TOP OF CONCRETE
TOS	TOP OF STEEL
TOSJ	TOP OF STEEL JOIST
TSF	THICKENED SLAB FOOTING
TYP	TYPICAL
UNO	UNLESS NOTED OTHERWISE
VERT	VERTICAL
VLI	V-LOCK INTERLOCK (DEFORMED METAL DECK)
W	WIDE
W/	WITH
WF	WALL FOOTING
WGT	WEIGHT
WP	WELD POINT
WWF	WELDED WIRE FABRIC
XXS	DOUBLE-EXTRA STRONG

DESIGN CRITERIA AND LOADS

1. DESIGN CRITERIA
   A) FLORIDA BUILDING CODE (FBC) – 2009 OR LATEST EDITION
   B) KSC STD-Z-0004F
2. ROOF LIVE LOAD 20 PSF (WITH FBC AREA REDUCTIONS)
3. DESIGN WIND LOADS PER ASCE 7-05 CRITERIA
   A) BASIC WIND SPEED 130 MPH
   B) WIND IMPORTANCE FACTOR 1.0
   C) BUILDING CATEGORY II
   D) EXPOSURE CATEGORY C
   E) INTERNAL PRESSURE COEFFICIENT 0.18
4. LIVE LOAD:
   SLAB ON GRADE, PUMP STATION 350 PSF
   ROOF 20 PSF
   ROOF ON ELECTRICAL/FEEDING ROOM 60 PSF
5. DEFLECTION CRITERIA:
   A) DEAD+LIVE LOADS L/240
   B) LIVE LOADS L/360
6. SEISMIC DESIGN CRITERIA:
   SITE CLASS: D
   MAPPED MAXIMUM CONSIDERED EARTHQUAKE SPECIAL RESPONSE ACCELERATION:
   AT SHORT PERIOD: Ss<=0.25
   AT 1 SECOND: S_1 <=0.1

FOUNDATIONS

1. SEE GEOTECHNICAL REPORT OR EXPLORATION BY:
   NODARSE & ASSOCIATES, A TERRACON COMPANY
   NUMBER: H6101040
   DATED: OCT. 26, 2011
   THIS REFERENCE IS PROVIDED FOR INFORMATION ONLY.
2. STRIP ALL ORGANIC OR UNSUITABLE MATERIAL FOR 3'-0" BELOW BOTTOM OF FOUNDATION AND 2'-0" BELOW BOTTOM OF SLAB ON GRADE. EXCAVATE TO BOTTOM OF FOUNDATION/SLAB & PROOF ROLL WITH 10 TON VIBRATORY ROLLER OR HAND HELD SOIL COMPACTOR TO 95% PER ASTM D-1557 FOR 2'-0" BELOW EXCAVATION. PLACE CLEAN GRANULAR FILL IN 12 INCH LAYERS AND COMPACT TO A MINIMUM OF 95% OF THE MAXIMUM MODIFIED PROCTOR DRY DENSITY AS DETERMINED BY ASTM D-1557.
3. UNLESS NOTED, ALL FOOTINGS SHALL BE CENTERED UNDER COLUMNS, PIERS, AND WALLS.
4. ALLOWABLE SOIL BEARING STRENGTH: 2,500 PSF

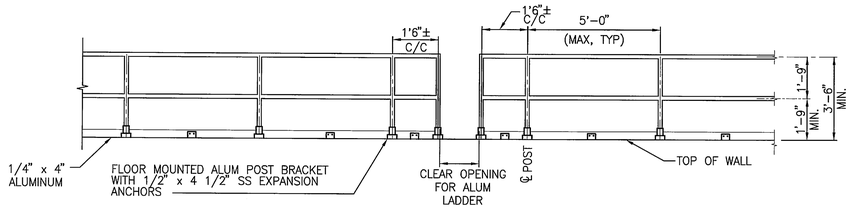

ALUMINUM PERIMETER HANDRAIL 1 S3
3/8" = 1'-0"

CONCRETE

1. THE REQUIRED CONCRETE STRENGTH BASED ON AN AGE OF 28 DAYS FOR ELEMENTS IN THE STRUCTURE SHALL NOT BE LESS:
   A) 4,000 PSI FOR CONCRETE BEAM, WALL, EQUIPMENT PAD AND PUMP STATION SLAB ON GRADE.
   B) 3,000 FOR FOUNDATION.
   C) 2,500 PSI FOR THRUST BLOCK, ENCASEMENT, ISOLATION PAD.
2. UNLESS OTHERWISE NOTED, ALL WALL REINFORCEMENT BARS SHALL BE CONTINUOUS AROUND CORNERS. REINFORCEMENT SHALL BE EXTENDED INTO CONNECTING WALLS AND LAPPED ON THE OPPOSITE FACE OF THE CONNECTING WALL.
3. CIP CONCRETE RAKED BEAM WITH INTEGRAL COLOR REFER TO SPECIFICATION

STRUCTURAL STEEL

1. FRAMING CONNECTIONS NOT DETAILED SHALL BE DESIGNED FOR THE END REACTION SHOWN ON THE PLAN. IF NO REACTION IS PROVIDED, DESIGN CONNECTION FOR 1/2 OF THE BEAM MAXIMUM TOTAL UNIFORM LOAD PER PART 3 OF THE AISC MANUAL FOR STEEL CONSTRUCTION.
2. BOLTS SHALL BE HIGH-STRENGTH BOLTS CONFIRMING TO ASTM A490, A563 NUTS & F436 WASHERS. BOLTING CONNECTIONS SHALL BE SLIP-CRITICAL CONNECTIONS WITH STANDARD OR SHORT-SLOTTED HOLE TYPE SPECIFIED IN STEEL CONSTRUCTION MANUAL BY AISC.

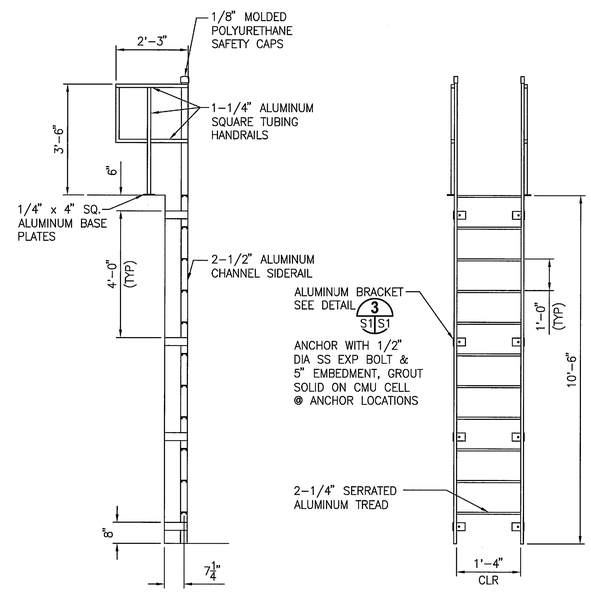

ALUMINUM LADDER DETAIL 2 S3
1/2" = 1'-0"

STEEL DECK

1. DECK SHALL BE CONTINUOUS OVER A MINIMUM OF THREE SPANS.
2. DIAPHRAGM LOAD CAPACITY SHALL BE A MINIMUM OF 560 PLF. SEE DECK CONNECTION LAYOUT FOR MINIMUM FASTENING PATTERNS FOR DIAPHRAGM ACTION.
3. IN ADDITION TO DIAPHRAGM ACTION LISTED ABOVE, THE ROOF DECK PATTERNS SHALL BE CAPABLE OF RESISTING THE WIND PRESSURES INDICATED IN COMPONENTS AND CLADDING WIND PRESSURES.

STRUCTURAL ALUMINUM

1. STRUCTURAL ALUMINUM SHALL BE 6061-T6.
2. BOLTED ALUMINUM CONNECTIONS SHALL BE AISI 316 STAINLESS STEEL.
3. ALL WELD OPERATORS SHALL BE AMERICAN WELDING SOCIETY (AWS) QUALIFIED.
4. ALL WELDS SHALL BE SHOP WELDED IN ACCORDANCE WITH AWS D1.2.
5. ALUMINUM IN CONTACT WITH CONCRETE OR DISSIMILAR METAL SURFACES SHALL BE COATED WITH BITUMINOUS PAINT, MYLAR ISOLATORS, OR APPROVED EQUAL SUBMITTED TO THE ENGINEER FOR APPROVAL.
6. ALL ALUMINUM SHALL BE ANODIZED, UNO.

CONCRETE MASONRY:

1. CONCRETE MASONRY UNITS SHALL BE LOAD BEARING TYPE CONFORMING TO ASTM C-90, TYPE 2, HAVING A MINIMUM COMPRESSIVE STRENGTH OF 1900 PSI (NET AREA) f'm = 1500 psi.
2. THE BEAMS CAST ON MASONRY WALLS SHALL BE CONSTRUCTED SO TO KEY AND BOND INTO BLOCK CELLS. THE USE OF BUILDING PAPER OR SHEET PLASTIC TO CLOSE VOIDS BELOW IS NOT ALLOWED.

REBAR SPLICE AND HOOK SCHEDULE

REBAR SIZE	Ld (CLASS A) F'c PSI 3000	Ld (CLASS A) F'c PSI 4000	Ld (CLASS B) F'c PSI 3000	Ld (CLASS B) F'c PSI 4000	STD HOOK LENGTH 90° Ldh	STD HOOK LENGTH 90° Lth	STD HOOK LENGTH 180° Ldh	STD HOOK LENGTH 180° Lth
#3	17"	15"	22"	20"	6"	6"	6"	4"
#4	22"	19"	27"	25"	8"	8"	8"	5"
#5	28"	24"	37"	32"	10"	10"	10"	5"
#6	33"	29"	43"	38"	12"	12"	12"	6"
#7	48"	42"	63"	55"	14"	14"	14"	7"
#8	55"	48"	72"	63"	16"	15"	16"	8"
#9	62"	54"	81"	71"	18"	19"	18"	11"
#10	70"	61"	91"	80"	20"	21"	20"	12"
#11	73"	67"	95"	87"	22"	23"	22"	13"

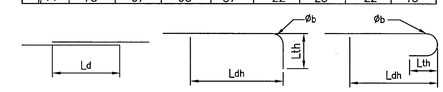

NOTE:
A. SCHEDULE IS FOR NORMAL WEIGHT CONCRETE AND UNCOATED / DEFORMED REINFORCEMENT STEEL BARS.
B. CLEAR SPACING BETWEEN BARS NOT LESS THAN BAR DIAMETER.
C. CLEAR COVER NOT LESS THAN BAR DIAMETER.
D. STIRRUPS THROUGHOUT TRANSVERSE REINFORCEMENT NOT LESS THAN THE MINIMUM OR CLEAR SPACING NOT LESS THAN 2 TIMES BAR DIAMETER AND CLEAR COVER NOT LESS THAN BAR DIAMETER.
E. BEND DIAMETER(Øb) SHALL BE:
   6*db FOR #3 THROUGH #8
   8*db FOR #9 THROUGH #11
F. Ld -- TENSION DEVELOPMENT LENGTH
   Ldh -- HOOK DEVELOPMENT LENGTH
   Lth -- HOOK TAIL LENGTH

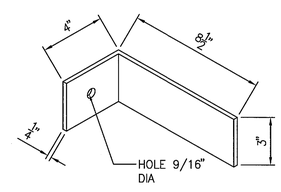

DETAIL 3 S1 S1
NTS

GRAPHIC SCALE
0 1 2 4
SCALE IN FEET
3/8"=1'-0"

GRAPHIC SCALE
0 1 2 4
SCALE IN FEET
1/2"=1'-0"

THIS SPACE RESERVED

SYM	ZONE	DESCRIPTION	DATE	APPROVED
A		ADDED SHEET-- INITIAL RELEASE TO EDC	12/05/11	KLM

REVISIONS

THIS DRAWING CREATED IN AUTOCAD 2010 FILE FORMAT AND WILL BE REVISED ONLY ON AN AUTOCAD SYSTEM. FILE: 14000189-DP5-S01.DWG

JONES EDMUNDS
730 NE WALDO ROAD, GAINESVILLE, FLORIDA 32641 / (352) 377-5821
3910 S WASHINGTON AVE, SUITE 210, TITUSVILLE, FLORIDA 32780 / (321) 269-2950

SIGNATURES	DATE
DRAWN S. HAFERKAMP	12/05/11
CHECKED N. PONTILLO	12/05/11
SUBMITTED W. LI	12/05/11
ST of LICENSURE: FL LICENSE NO: 56104	
APPROVED M. CLARK	12/5/11
K. MILLER	12/5/11

NATIONAL AERONAUTICS AND SPACE ADMINISTRATION
JOHN F. KENNEDY SPACE CENTER, NASA
KENNEDY SPACE CENTER, FLORIDA

REVITALIZE WATER & WASTEWATER SYSTEMS - VOLUME 5 OF 5
W1 PUMP STATION REPLACEMENT

STRUCTURAL GENERAL NOTES AND ABBREVIATIONS

FILE NO.	SIZE	DWG. NO.	REV
	F	79K38877 VOL 5	A

PROJ. NO. 96968.3 SHEET 27

S1

NOTICE: When Government drawings, specifications, or other data are used for any purpose other than in connection with a definitely related Government procurement operation, the United States Government thereby incurs no responsibility nor obligation whatsoever; and the fact that the Government may have formulated, furnished, or in any way supplied the said drawings, specifications or other data is not to be regarded by implication or otherwise as in any manner licensing the holder or any other person or corporation, or conveying any rights or permission to manufacture, use, or sell any patented invention that may in any way be related thereto.

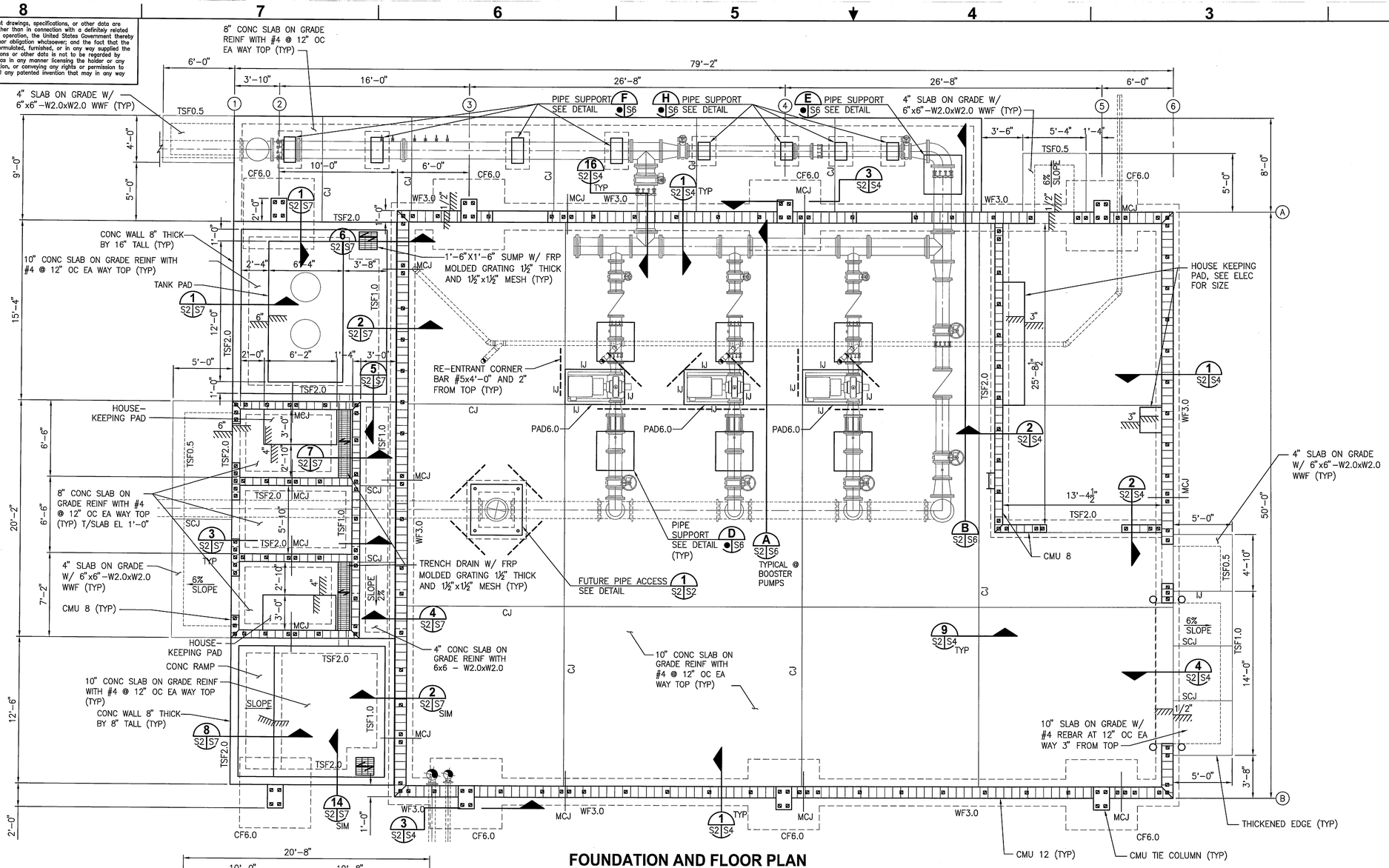

FOUNDATION AND FLOOR PLAN
1/4" = 1'-0"

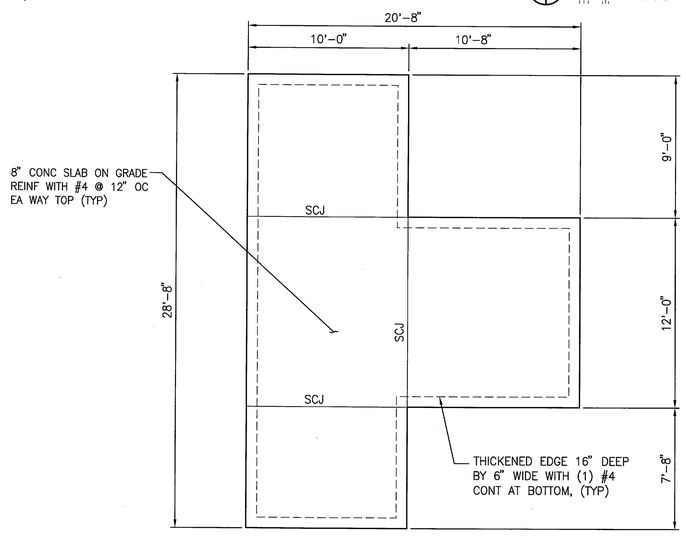

GENERATOR/FUEL TANK PAD
1/4" = 1'-0"

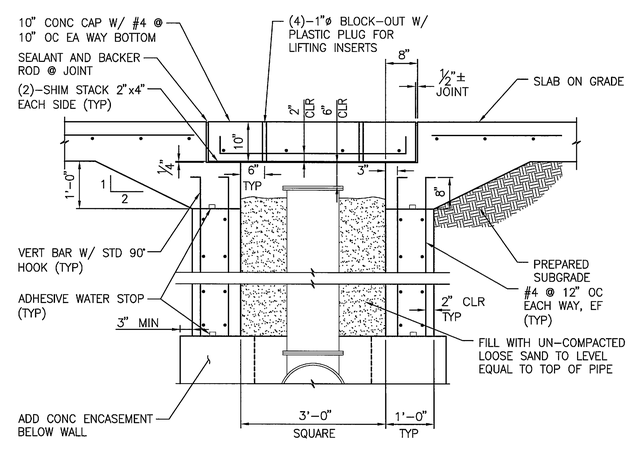

FUTURE PIPE ACCESS DETAIL (1 / S2 S2)
3/4"=1'-0"

GRAPHIC SCALE
0 0.5 1 2
SCALE IN FEET
3/4"=1'-0"

GRAPHIC SCALE
0 1 2 4 8
SCALE IN FEET
1/4"=1'-0"

PLAN NOTES:

A. a. FINISH FLOOR ELEVATION = 0'-0" UNO. SEE CIVIL DRAWING FOR TRUE FINISH FLOOR ELEVATION.
b. TOP OF EXTERIOR WALL FOOTING ELEVATION = (-)1'-4" UNO.
c. TOP OF PUMP PAD ELEVATION : 1'-10" (TYP, UNO). COORDINATE WITH PUMP MANUFACTURER.
d. CENTER (OR LINE) OF FOOTINGS TO BE CENTER (OR LINE) OF COLUMN (OR 8" & 12" CMU WALL) UNO.
e. PROVIDE 10 MIL POLYETHYLENE VAPOR BARRIER BENEATH ALL SLABS ON GRADE. (UNDER ROOF AREAS)

B. CONCRETE MASONRY UNIT \ WALL:

MARK	THICKNESS (IN)	NO. OF REBAR	REBAR SIZE	SPACING (IN)
CMU 12	12	2	#5	32
CMU 8	8	1	#5	40

C. WALL VERTICAL STEEL REBARS IN SOLID FILLED CMU CELLS SHALL NOT EXCEED SPACING SPECIFIED TYPICALLY. ADDITIONAL REBAR IN FILLED CELLS SHALL BE PLACED AT WALL CORNERS, INTERSECTIONS WALL OPENING EXCEED 2'-0".

D. RE-ENTRANT BARS FOR SLAB ON GRADE SHALL BE #5X4'-0" LONG, CENTERED, AT 45°, 3" OFF-SET FROM THE CORNER; OR CENTERED TO OPPOSITE SIDE JOINT ON THE OTHER DIRECTION, 3" OFF-SET FROM THE JOINT.

E. * DENOTES VERIFICATION AND/OR COORDINATION BY THE CONTRACTOR IS REQUIRED WITH RESPECT TO APPROVED SHOP DRAWINGS PRIOR TO CONSTRUCTION.

F. ADDITIONAL STEEL REINFORCEMENT AT CONCRETE FOUNDATION, SLAB, CONC WALL, AND CMU WALLS SHALL BE PROVIDED PER (6 / S4) (7 / S4) (11 / S4)

G. HOUSEKEEPING PAD DETAIL SEE (5 / S4) COORDINATE WITH ELECTRICAL DRAWING FOR SIZE AND LOCATIONS

H. LOCATIONS AND TOP ELEVATION OF PIPE SUPPORTS SHALL BE COORDINATED WITH MECHANICAL DRAWING AND PUMP/PIPE MANUFACTURERS.

LEGEND:

- REINFORCED CMU WALL
- MASONRY CONTROL JOINT (MCJ) (13 / S4)
- CONC WALL
- RECESS
- CMU TIE COLUMN
- WALL OR COLUMN FOUNDATION SEE SCHEDULE (14 / S4)
- SAW-CUT CONTRACTION JOINT, 18'-0" OC (MAX) (9 / S4)
- ISOLATION JOINT (10 / S4)
- CONSTRUCTION JOINT (9 / S4)
- GRATING AND SPAN DIRECTION

THIS SPACE RESERVED

SYM	ZONE	DESCRIPTION	DATE	APPROVED
A		ADDED SHEET~ INITIAL RELEASE TO EOC	12/05/11	KM

REVISIONS

THIS DRAWING CREATED IN AUTOCAD 2010 FILE FORMAT AND WILL BE REVISED ONLY ON AN AUTOCAD SYSTEM. FILE: 14000189-DP5-S02.DWG

JONES EDMUNDS
730 NE WALDO ROAD, GAINESVILLE, FLORIDA 32641 / (352) 377-5821
3910 S WASHINGTON AVE, SUITE 210, TITUSVILLE, FLORIDA 32780 / (321) 269-2950

SIGNATURES	DATE
DRAWN S. HAFERKAMP	12/05/11
CHECKED N. PONTILLO	12/05/11
SUBMITTED W. LI	12/05/11
ST of LICENSURE: FL LICENSE NO: 56104	
APPROVED M. CLARK	12/5/11
K. MILLER	12/5/11

NATIONAL AERONAUTICS AND SPACE ADMINISTRATION
JOHN F. KENNEDY SPACE CENTER, NASA
KENNEDY SPACE CENTER, FLORIDA

REVITALIZE WATER & WASTEWATER SYSTEMS - VOLUME 5 OF 5
W1 PUMP STATION REPLACEMENT
W-1 PUMP STATION FOUNDATION AND FLOOR PLAN

FILE NO.	SIZE	DWG. NO.	REV
	F	79K38877 VOL 5	A
PROJ. NO. 96968.3		SHEET 28	

S2

NOTICE: When Government drawings, specifications, or other data are used for any purpose other than in connection with a definitely related Government procurement operation, the United States Government thereby incurs no responsibility nor obligation whatsoever; and the fact that the Government may have formulated, furnished, or in any way supplied the said drawings, specifications or other data is not to be regarded by implication or otherwise as in any manner licensing the holder or any other person or corporation, or conveying any rights or permission to manufacture, use, or sell any patented invention that may in any way be related thereto.

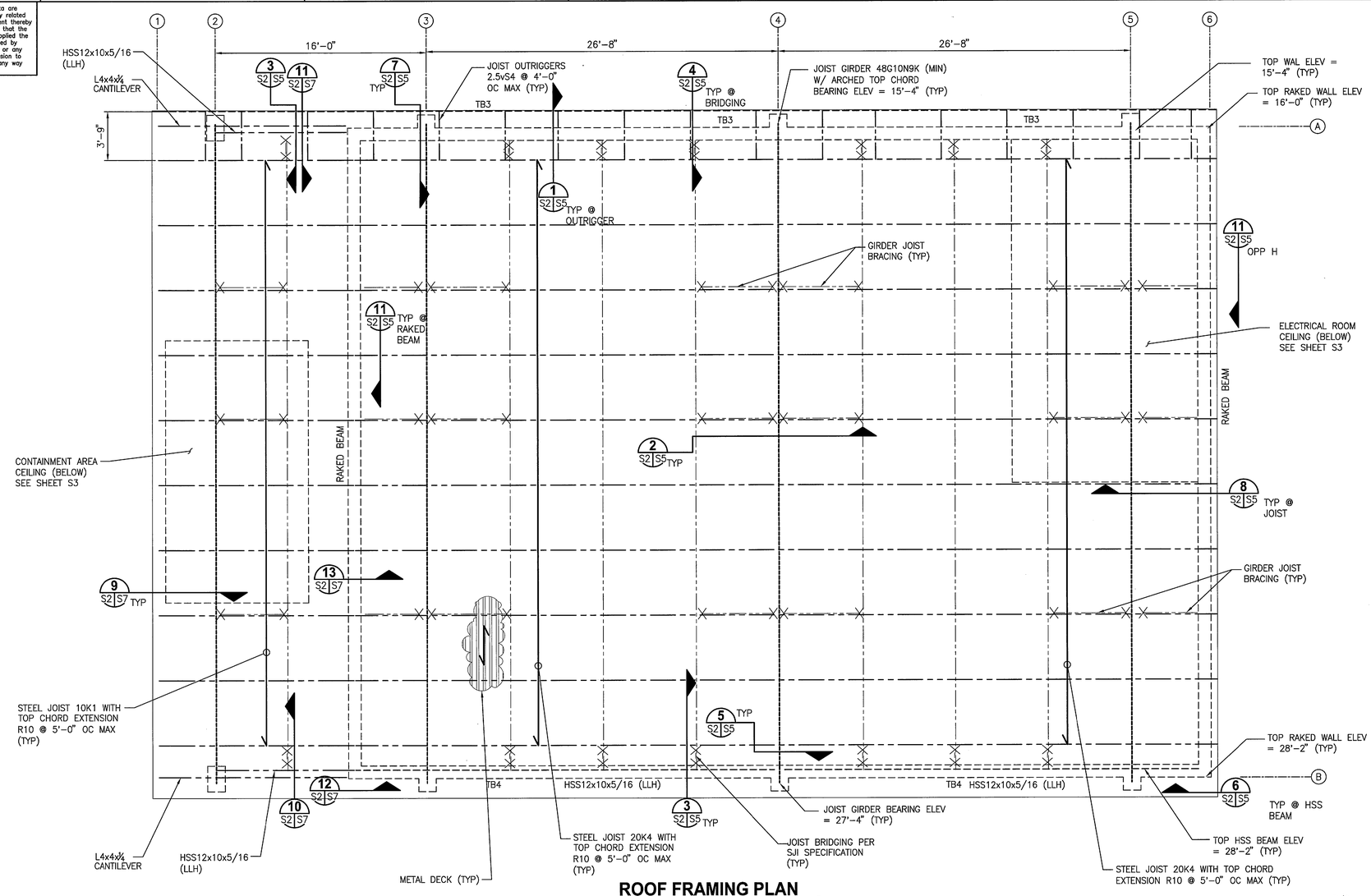

ROOF FRAMING PLAN
1/4" = 1'-0"

PLAN NOTES:

A. SEE PLAN FOR ROOF JOIST BEARING AND TOP OF TIE BEAM ELEVATIONS.

B. BRIDGE SPACING SHOWN IS MINIMUM REQUIRED. ADD ADDITIONAL BRIDGING IF NECESSARY FOR WIND UPLIFT DESIGN. MINIMUM BRIDGE MEMBER REQUIREMENTS : L2x2x1/8.

C. SEE ARCH DRAWING FOR ROOF ROOF SLOPE RATIO AND CURVATURE.

D. TOP OF TB-1 AND TB-2 ELEVATION: 10'-0"
TB-3 ELEVATION: 15'-4"
TB-4 ELEVATION: 22'-0"
TB-5 ELEVATION: 10'-4"
HIGH ROOF GIRT (HSS12x10): 28'-2"

E. ALL STEEL TUBING BEAMS, JOISTS, ANGLES, AND MISCELLANEOUS STEEL ELEMENTS EXPOSED TO ENVIRONMENT, EXTERIOR AND INTERIOR, SHALL HAVE ZINC PRIMER W/ EPOXY FINISH PER SPECIFICATION. DAMAGED COATED SURFACES SHALL BE REPAIRED AND RECOATED PER SPECIFICATION.

F. LINTEL DETAIL SEE 15/S4, CMU TIE BEAM SEE 9/S5.
GROUT IN LINTEL AND TIE BEAM SHALL BE WITH COMPRESSIVE STRENGTH OF 3000 PSI MINIMUM. WALL VERTICAL REBAR SHALL BE EXTEND TO TOP OF TIE BEAM WITH 2" COVER.

LEGEND:

- WALL BELOW
- HSS12X — HOLLOW STRUCTURAL STEEL BEAM
- STEEL JOIST GIRDER
- 24K6 — STEEL JOIST
- JOIST BRIDGING
- DIAGONAL BRACING
- CONCRETE TOPPING ON METAL DECK AND DECK SPAN DIRECTION

NET WIND PRESSURE SCHEDULE (PSF)

PRESSURE (+) / SUCTION (−)	ROOF ZONE			WALL ZONE	
AREA (SF)	1	2	3	4	5
10	−52.3/+20.5	−62.9/+20.5	−108.8/+20.5	−45.2/+41.7	−55.8/+41.7
20	−50.5/+18.7	−59.3/+18.7	−98.2/+18.7	−43.4/+39.6	−52.3/+39.6
50	−47.0/+18.0	−52.3/+18.0	−87.6/+18.0	−40.6/+37.1	−47.0/+37.1
100	−45.2/+17.0	−48.7/+17.0	−77.0/+17.0	−43.4/+35.7	−43.4/+35.7
> 100				−37.1/+33.6	−40.0/+33.6

WIND PRESSURE ZONES ARE SYMMETRIC PER THE BUILDING GEOMETRY.

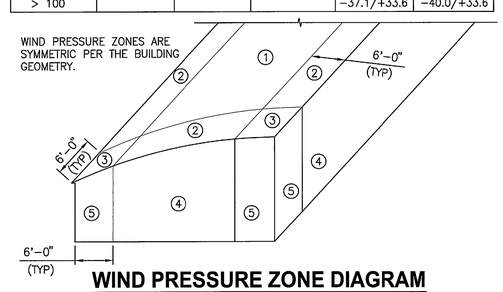

WIND PRESSURE ZONE DIAGRAM

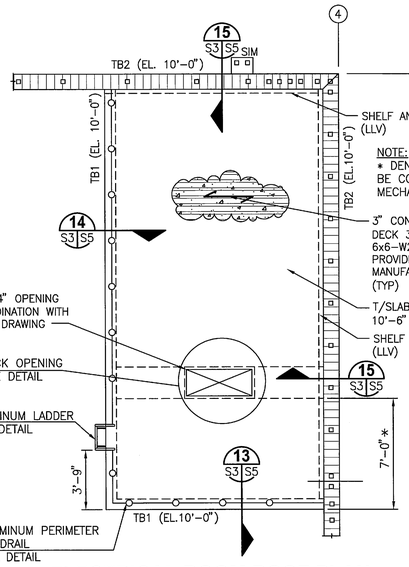

NOTE:
* DENOTES DIMENSIONS SHALL BE COORDINATED WITH MECHANICAL DRAWINGS.

ELECTRICAL ROOM ROOF PLAN
1/4" = 1'-0"

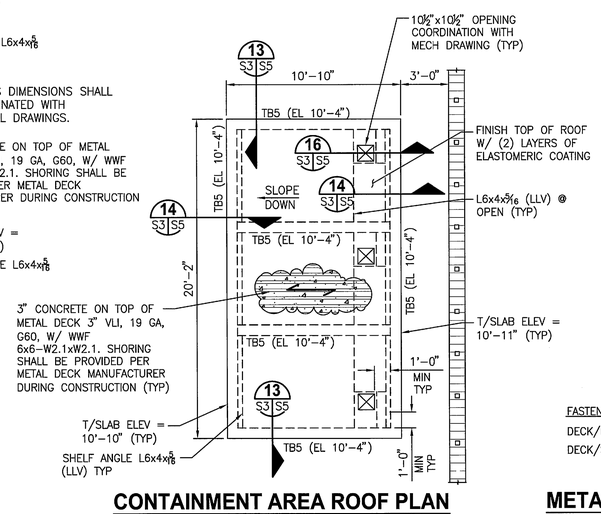

CONTAINMENT AREA ROOF PLAN
1/4" = 1'-0"

GRAPHIC SCALE
0 1 2 4 8
SCALE IN FEET
1/4"=1'-0"

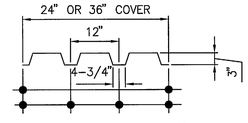

TYPE VLI GAGE 19
FINISH GALV. G60
Sp 0.677 in.^3 Sn 0.700 in.^3
I. 1.105 in.^4 Fy min. 40 ksi

FASTENING PATTERN
DECK/DECK (SIDELAP): #12 TEK SCREWS AT 12" ON CENTER
DECK/SUPPORT. : 5/8" PUDDLE WELD 36/4 OR 24/3

METAL DECK AND FASTENER LAYOUT
3/4" = 1'-0"

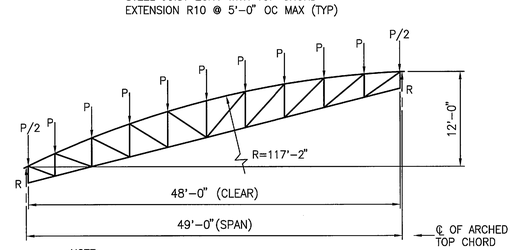

NOTE:
GIRDER DESIGN LOADS: P=9.0 KIP (SERVICE LOADS, NON-FACTORED)
MAX DEPTH = 48"

JOIST GIRDER LOADING DIAGRAM

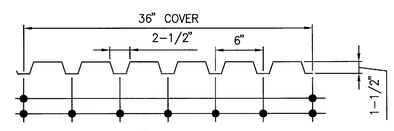

TYPE B GAGE 22
FINISH GALV. G90
Sp 0.192 in.^3 Sn 0.186 in.^3
I. 0.169 in.^4 Fy min. 33 ksi

FASTENING PATTERN
DECK/DECK (SIDELAP): (10)-#10 TEK SCREWS BTWN. SUPPORTS
DECK/SUPPORT. : #12 TEK SCREWS 36/7

METAL ROOF DECK FASTENER LAYOUT

THIS SPACE RESERVED

SYM	ZONE	DESCRIPTION	DATE	APPROVED
A		ADDED SHEET - INITIAL RELEASE TO EDC	12/05/11	KM

REVISIONS

THIS DRAWING CREATED IN AUTOCAD 2010 FILE FORMAT AND WILL BE REVISED ONLY ON AN AUTOCAD SYSTEM. FILE: 14000189-DP5-S03.DWG

JONES EDMUNDS
730 NE WALDO ROAD, GAINESVILLE, FLORIDA 32641 / (352) 377-5821
3910 S WASHINGTON AVE, SUITE 210, TITUSVILLE, FLORIDA 32780 / (321) 269-2950

SIGNATURES	DATE
DRAWN S. HAFERKAMP	12/05/11
CHECKED N. PONTILLO	12/05/11
SUBMITTED W. LI	12/05/11
ST of LICENSURE: FL LICENSE NO: 56104	
APPROVED M. CLARK	12/15/11
K. MILLER	12/15/11

NATIONAL AERONAUTICS AND SPACE ADMINISTRATION
JOHN F. KENNEDY SPACE CENTER, NASA
KENNEDY SPACE CENTER, FLORIDA

REVITALIZE WATER & WASTEWATER SYSTEMS - VOLUME 5 OF 5
W1 PUMP STATION REPLACEMENT

W-1 PUMP STATION ROOF FRAMING PLAN

FILE NO.	SIZE	DWG. NO.	REV
	F	79K38877 VOL 5	A
PROJ. NO. 96968.3		SHEET 29	

S3

NOTICE: When Government drawings, specifications, or other data are used for any purpose other than in connection with a definitely related Government procurement operation, the United States Government thereby incurs no responsibility nor obligation whatsoever; and the fact that the Government may have formulated, furnished, or in any way supplied the said drawings, specifications or other data is not to be regarded by implication or otherwise as in any manner licensing the holder or any other person or corporation, or conveying any rights or permission to manufacture, use, or sell any patented invention that may in any way be related thereto.

NOTE:
SEE PLAN FOR LOCATION OF FILLED CELLS INDICATED THUS.

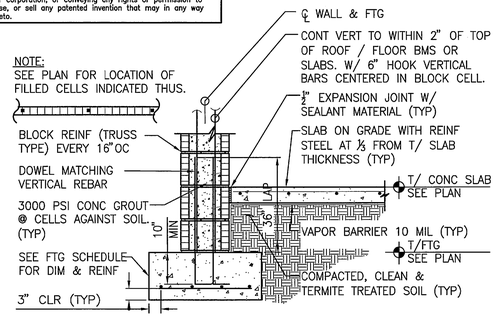

EXTERIOR WALL FOUNDATION (1/S4)
3/4"=1'-0"

NOTE:
SEE PLAN FOR LOCATION OF FILLED CELLS INDICATED.

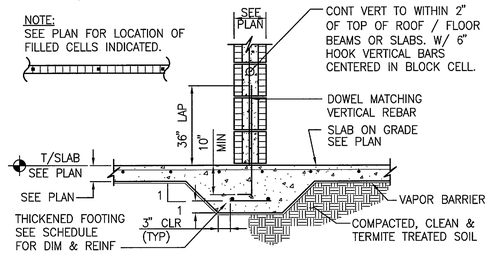

INTERIOR WALL FOUNDATION (2/S4)
3/4"=1'-0"

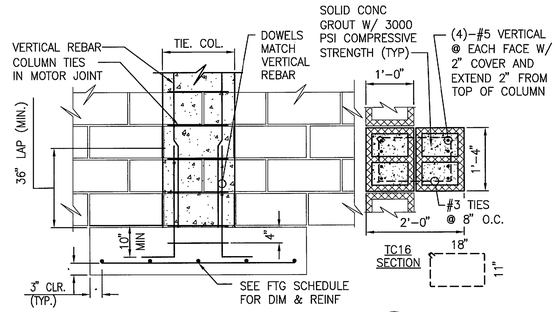

TIE COLUMN DETAIL (3/S4)
3/4"=1'-0"

NOTE:
1. * DIMENSIONS TO COORDINATE WITH PUMP AND PIPE MFR (TYP)

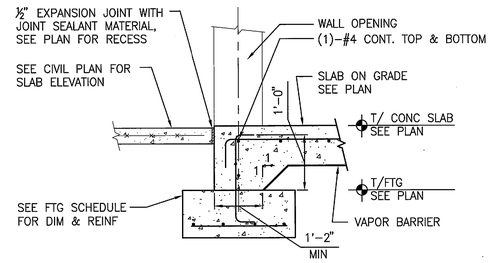

WALL FOUNDATION @ DOORWAY (4/S4)
3/4"=1'-0"

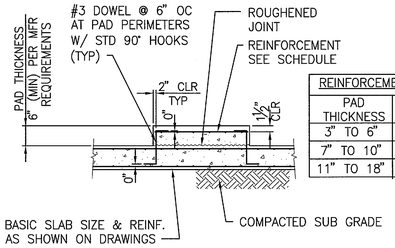

REINFORCEMENT SCHEDULE	
PAD THICKNESS	REINFORCEMENT EACH WAY
3" TO 6"	#3 @ 12" OC
7" TO 10"	#4 @ 12" OC
11" TO 18"	#5 @ 12" OC

EQUIPMENT HOUSEKEEPING PAD DETAIL (5/S4)
NTS

NOTES: PROVIDE MATCHING CORNER BARS FOR ALL HORIZONTAL REINFORCING AT INTERSECTIONS & CORNERS OF ALL FOOTINGS, THICKENED SLABS ON GRADE, WALLS, BEAMS, AND BLOCKS, UNLESS NOTED OTHERWISE.

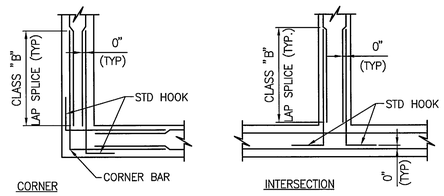

REINF. AT WALL/FOOTING INTERSECTION (6/S4)
NTS

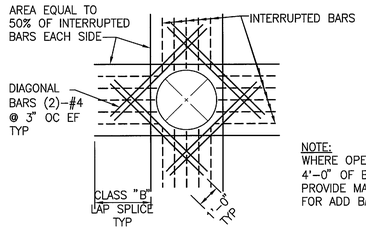

NOTE:
WHERE OPENING IS WITHIN 4'-0" OF BASE SLAB PROVIDE MATCHING DOWELS FOR ADD BARS

CONCRETE OPENING REINFORCEMENT (7/S4)
NTS

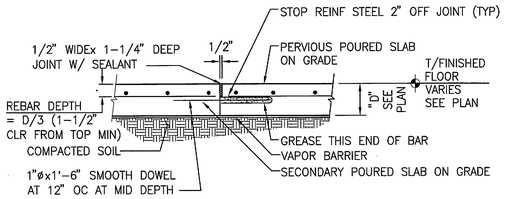

DOWELED CONTRACTION JOINT (CJ)
NTS

SAW CUT JOINT WITHIN 10 HOURS (MAX) AFTER CONCRETE POURING WITHOUT DAMAGING EDGES. FILL WITH SEALANT.

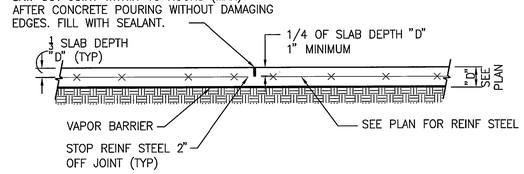

SLAB SAW-CUT CONTRACTION JOINT (SCJ) (9/S4)
NTS

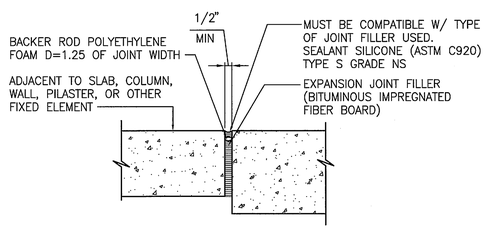

ISOLATION JOINT (IJ) DETAIL (10/S4)
NTS

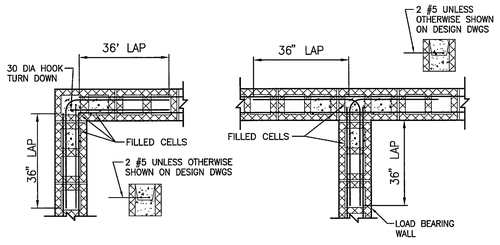

REINF. AT CMU BEAM INTERSECTION (11/S4)
NTS

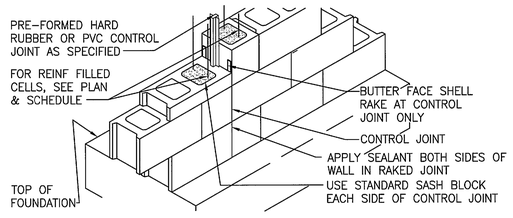

MASONRY CONTROL JOINT CONSTRUCTION (13/S4)
NTS

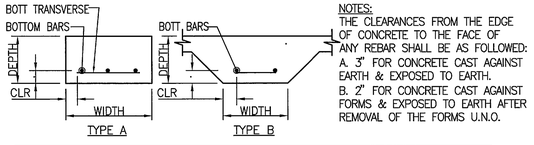

NOTES:
THE CLEARANCES FROM THE EDGE OF CONCRETE TO THE FACE OF ANY REBAR SHALL BE AS FOLLOWED:
A. 3" FOR CONCRETE CAST AGAINST EARTH & EXPOSED TO EARTH.
B. 2" FOR CONCRETE CAST AGAINST FORMS & EXPOSED TO EARTH AFTER REMOVAL OF THE FORMS U.N.O.

MARK	TYPE	WIDTH (ft)	LENGTH (ft)	DEPTH (ft)	LONGITUDINAL BARS	TRANSVERSE SIZE	TRANSVERSE SP (in)	REMARKS
WF3.0	A	3'-0"	CONT	1'-4"	(4)-#5	#5	18	
TSF2.0	B	1'-6"	CONT	1'-2"	(2)-#5	#5	18	
TSF1.0	B	1'-0"	CONT	1'-2"	(2)-#4	#4	18	
TSF0.5	B	6"	CONT	1'-0"	(1)-#4	N/A	N/A	
PAD6.0	A	*2'-0"	*6'-0"	*4'-0"	#5'S	#5'S	12	SEE DETAIL C/S6
CF6.0	A	6'-0"	6'-0"	1'-4"	(6)-#6	(6)-#6	EQ SP	

FOUNDATION SCHEDULE (14/S4)
NTS

LINTEL SCHEDULE						
SPAN	LENGTH	WIDTH	DEPTH	TYPE	REINF	STIRRUPS
12'-0"	13'-4"	12"	1'-4"	C	3-#5 T & B	#3 @ 8" OC
8'-0"	9'-4"	8" OR 12"	1'-4"	B	2#5 T&B	#3 @ 16" OC
4'-0"	5'-4"	8" OR 12"	8"	A	2#5 BOTTOM	–

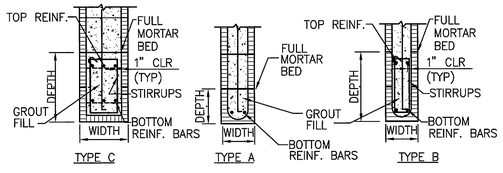

MASONRY LINTEL AND SILL SCHEDULE (15/S4)
NTS

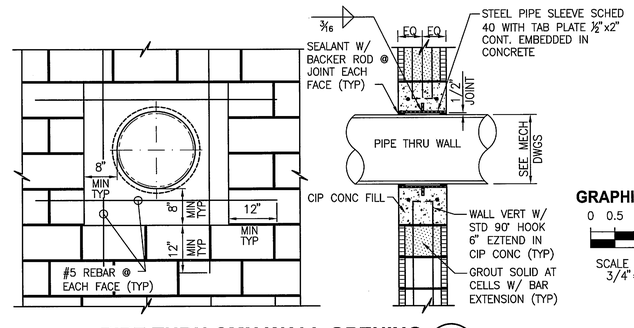

PIPE THRU CMU WALL OPENING (16/S4)
NTS

GRAPHIC SCALE
0 0.5 1 2
SCALE IN FEET
3/4"=1'-0"

S4

THIS SPACE RESERVED

SYM	ZONE	DESCRIPTION	DATE	APPROVED
A		ADDED SHEET - INITIAL RELEASE TO EDC	12/05/11	

REVISIONS

THIS DRAWING CREATED IN AUTOCAD 2010 FILE FORMAT AND WILL BE REVISED ONLY ON AN AUTOCAD SYSTEM. FILE: 14000189-DP5-S04.DWG

JONES EDMUNDS
730 NE WALDO ROAD, GAINESVILLE, FLORIDA 32641 / (352) 377-5821
3910 S WASHINGTON AVE, SUITE 210, TITUSVILLE, FLORIDA 32780 / (321) 269-2950

SIGNATURES	DATE
DRAWN S. HAFERKAMP	12/05/11
CHECKED N. PONTILLO	12/05/11
SUBMITTED W. LI	12/05/11
ST of LICENSURE: FL LICENSE NO: 56104	
APPROVED M. CLARK	12/15/11
K. MILLER	12/15/11

NATIONAL AERONAUTICS AND SPACE ADMINISTRATION
JOHN F. KENNEDY SPACE CENTER, NASA
KENNEDY SPACE CENTER, FLORIDA

REVITALIZE WATER & WASTEWATER SYSTEMS - VOLUME 5 OF 5
W1 PUMP STATION REPLACEMENT

STRUCTURAL DETAILS

FILE NO.	SIZE	DWG. NO.	REV
	F	79K38877 VOL 5	A
PROJ. NO. 96968.3		SHEET 30	

NOTICE: When Government drawings, specifications, or other data are used for any purpose other than in connection with a definitely related Government procurement operation, the United States Government thereby incurs no responsibility nor obligation whatsoever; and the fact that the Government may have formulated, furnished, or in any way supplied the said drawings, specifications or other data is not to be regarded by implication or otherwise as in any manner licensing the holder or any other person or corporation, or conveying any rights or permission to manufacture, use, or sell any patented invention that may in any way be related thereto.

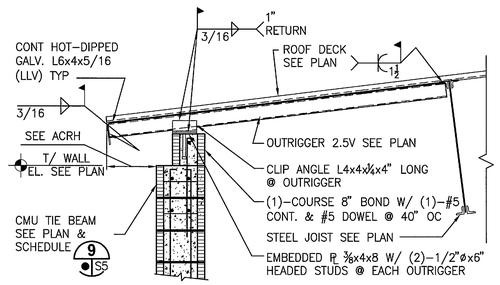

ROOF OVERHANG AT CMU WALL 1
3/4"=1'-0"

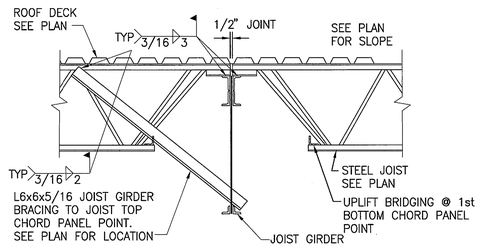

STEEL JOIST AT GIRDER JOIST 2
3/4"=1'-0"

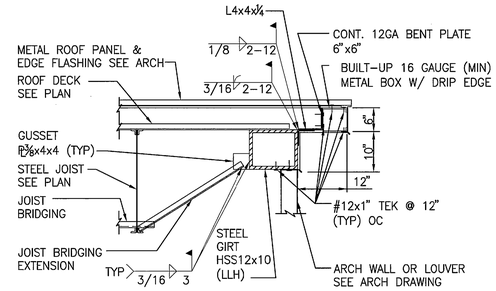

JOIST BRIDGING AT TUBING GIRT 3
NTS

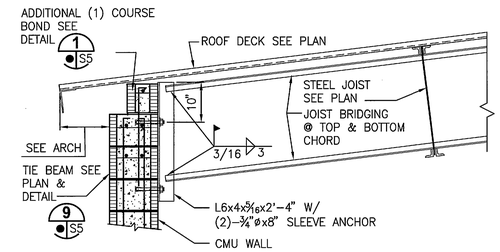

JOIST BRIDGING AT CMU WALL 4
3/4"=1'-0"

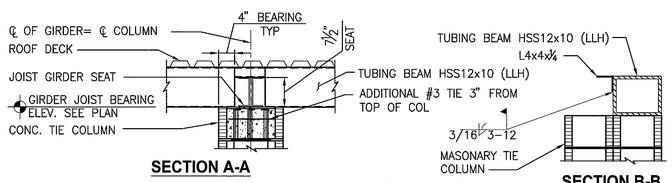

SECTION A-A

SECTION B-B

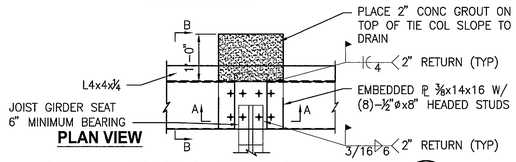

PLAN VIEW

GIRDER JOIST & GIRT CONNECTION 5
3/4"=1'-0"

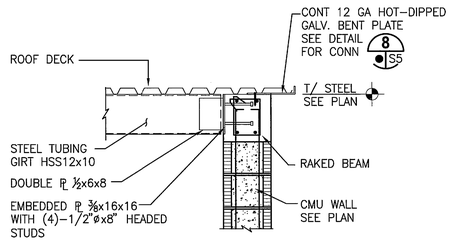

GIRT @ RAKED BEAM CONNECTION 6
3/4"=1'-0"

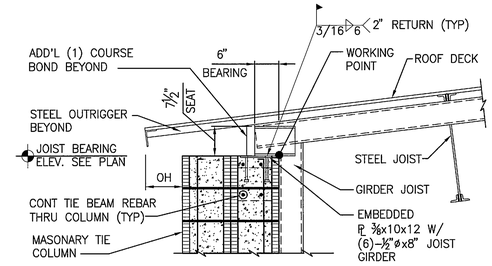

JOIST GIRDER BEARING DETAIL 7
3/4"=1'-0"

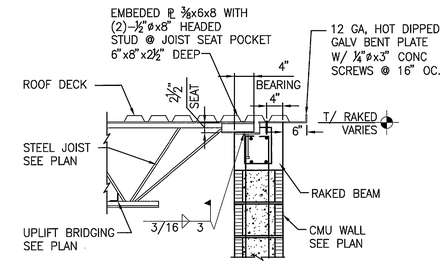

JOIST BEARING AT RAKED BEAM 8
3/4"=1'-0"

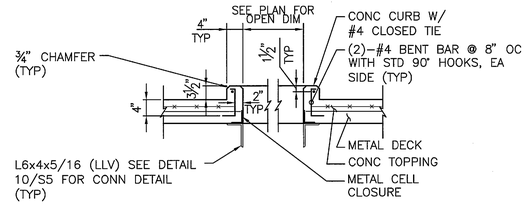

CONC CURB DETAIL 16
NTS

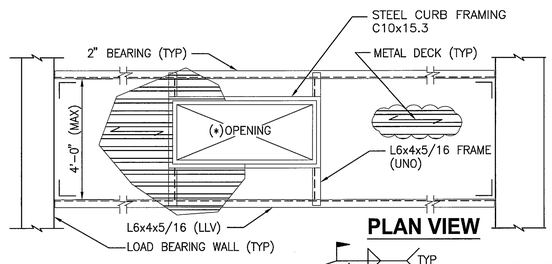

PLAN VIEW

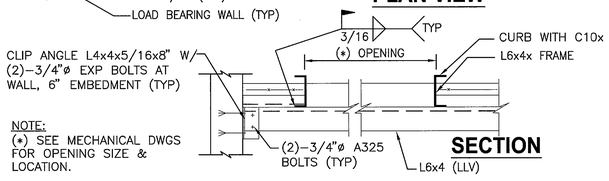

SECTION

NOTE:
(*) SEE MECHANICAL DWGS FOR OPENING SIZE & LOCATION.

DECK OPENING DETAIL 10
NTS

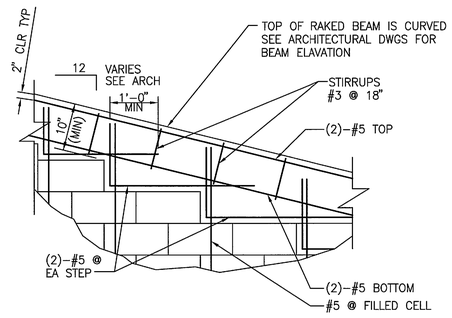

TYPICAL RAKED BEAM DETAIL 11
NTS

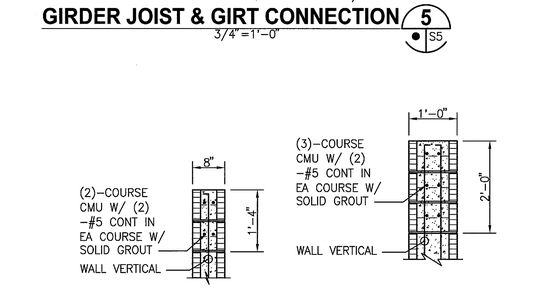

TB-1, TB-5

TB-2, TB-3 & TB-4

NOTE:
FOR TB-4, REINF STEEL SHALL NOT BE INTERRUPTED AT MASONRY CONTROL JOINTS.

CMU TIE BEAM SCHEDULE 9
NTS

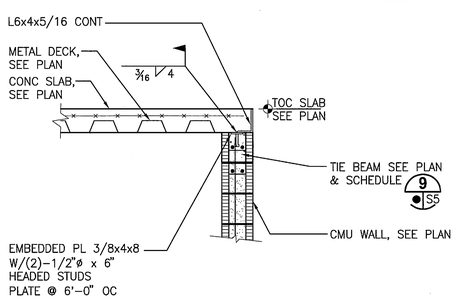

DECK SUPPORTING DETAIL @ ELECTRICAL ROOM 13
3/4"=1'-0"

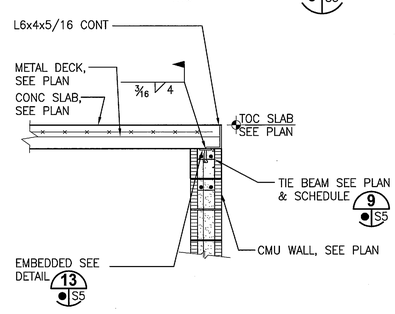

DECK SUPPORTING DETAIL @ ELECTRICAL ROOM 14
3/4"=1'-0"

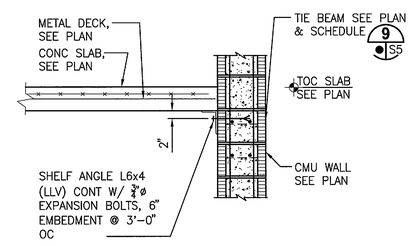

DECK SUPPORTING @ ELECTRICAL ROOM 15
3/4"=1'-0"

GRAPHIC SCALE
0 0.5 1 2
SCALE IN FEET
3/4"=1'-0"

THIS SPACE RESERVED

SYM	ZONE	DESCRIPTION	DATE	APPROVED
A		ADDED SHEET – INITIAL RELEASE TO EDC	12/05/11	

REVISIONS

THIS DRAWING CREATED IN AUTOCAD 2010 FILE FORMAT AND WILL BE REVISED ONLY ON AN AUTOCAD SYSTEM. FILE: 14000189-DP5-S05.DWG

JONES EDMUNDS
730 NE WALDO ROAD, GAINESVILLE, FLORIDA 32641 / (352) 377-5821
3910 S WASHINGTON AVE, SUITE 210, TITUSVILLE, FLORIDA 32780 / (321) 269-2950

SIGNATURES	DATE
DRAWN S. HAFERKAMP	12/05/11
CHECKED N. PONTILLO	12/05/11
SUBMITTED W. LI	12/05/11
ST of LICENSURE: FL LICENSE NO: 56104	
APPROVED M. CLARK	12/5/11
K. MILLER	12/5/11

NATIONAL AERONAUTICS AND SPACE ADMINISTRATION
JOHN F. KENNEDY SPACE CENTER, NASA
KENNEDY SPACE CENTER, FLORIDA

REVITALIZE WATER & WASTEWATER SYSTEMS - VOLUME 5 OF 5
W1 PUMP STATION REPLACEMENT

STRUCTURAL DETAILS

FILE NO.	SIZE	DWG. NO.	REV
	F	79K38877 VOL 5	A
PROJ. NO. 96968.3		SHEET 31	

S5

NOTICE: When Government drawings, specifications, or other data are used for any purpose other than in connection with a definitely related Government procurement operation, the United States Government thereby incurs no responsibility nor obligation whatsoever; and the fact that the Government may have formulated, furnished, or in any way supplied the said drawings, specifications or other data is not to be regarded by implication or otherwise as in any manner licensing the holder or any other person or corporation, or conveying any rights or permission to manufacture, use, or sell any patented invention that may in any way be related thereto.

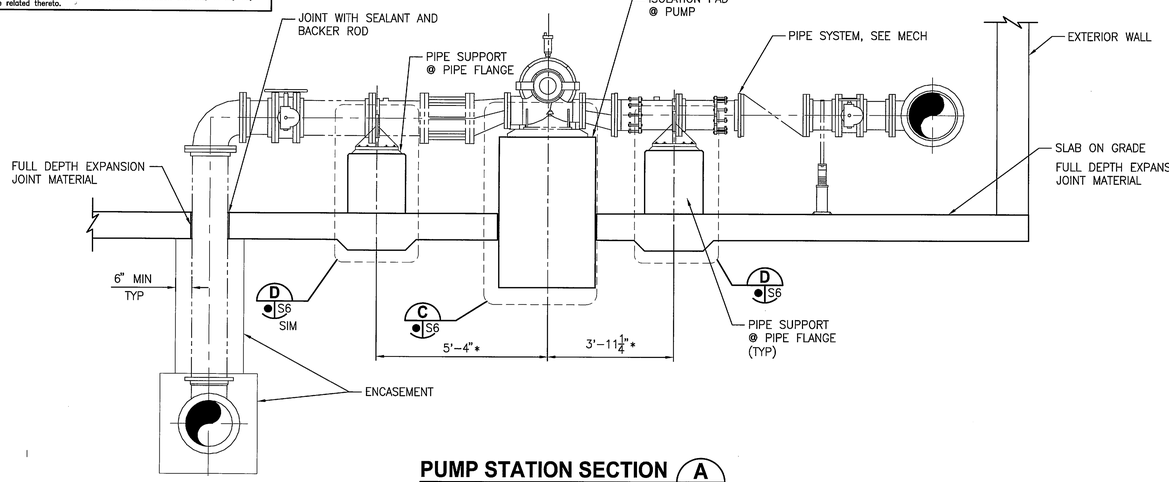

PUMP STATION SECTION A
1/2" = 1'-0" S2 S6

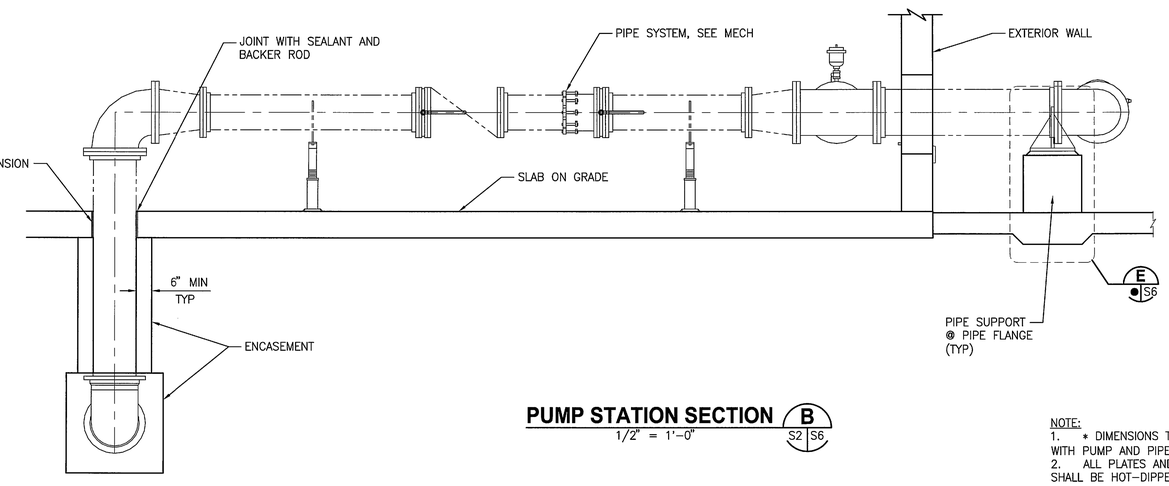

PUMP STATION SECTION B
1/2" = 1'-0" S2 S6

NOTE:
1. * DIMENSIONS TO COORDINATE WITH PUMP AND PIPE MFR (TYP)
2. ALL PLATES AND ANCHOR BOLTS SHALL BE HOT-DIPPED GALVANIZED.

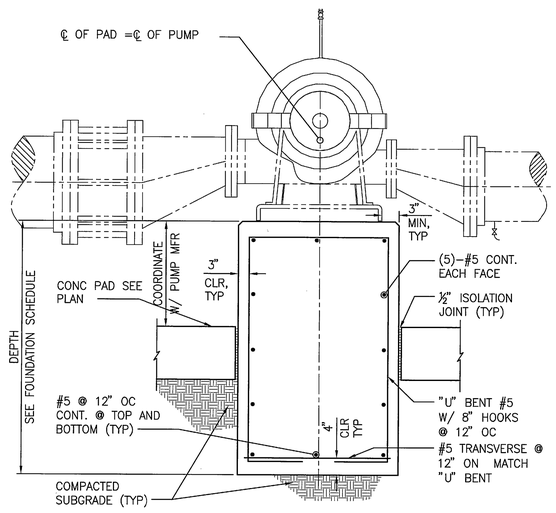

PUMP PAD REINF DETAIL C
1" = 1'-0" S6

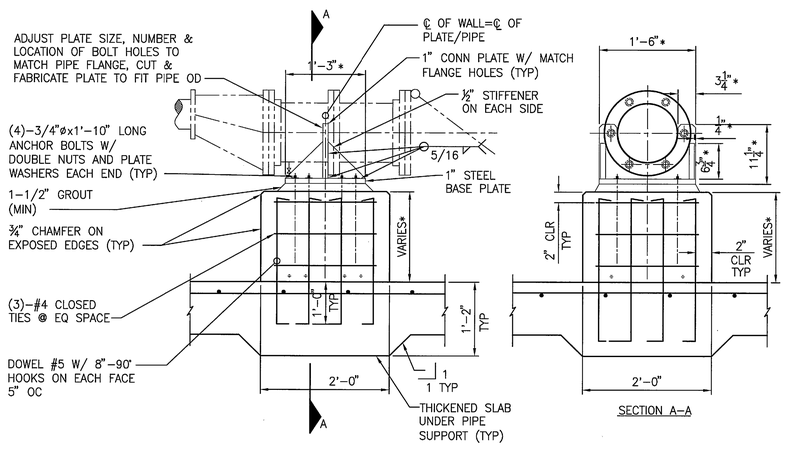

10"/12"Ø PIPE W/ AXIAL LOAD SUPPORT DETAIL D
1" = 1'-0" S6

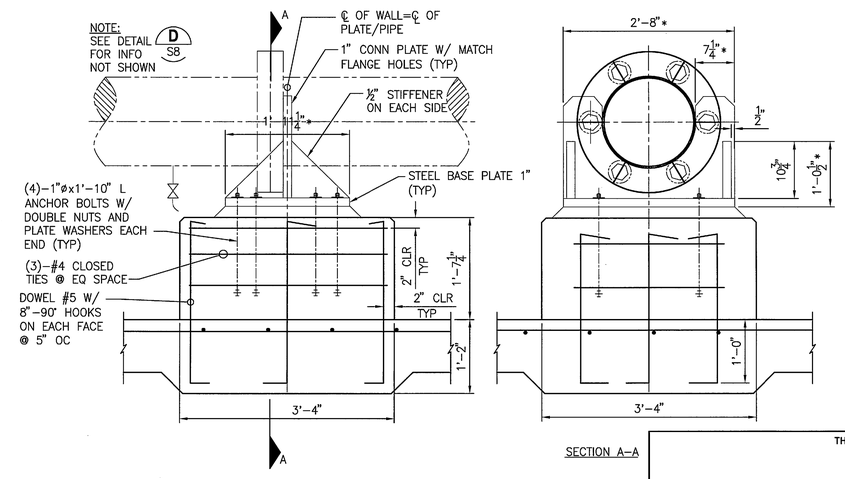

16"Ø PIPE W/ AXIAL LOAD SUPPORT DETAIL E
1" = 1'-0" S6

GRAPHIC SCALE
0 1 2 4
SCALE IN FEET 1/2"=1'-0"

GRAPHIC SCALE
0 0.5 1 2
SCALE IN FEET 3/4"=1'-0"

GRAPHIC SCALE
0 0.5 1 2
SCALE IN FEET 1"=1'-0"

GRAPHIC SCALE
0 0.5 1 2
SCALE IN FEET 1 1/2"=1'-0"

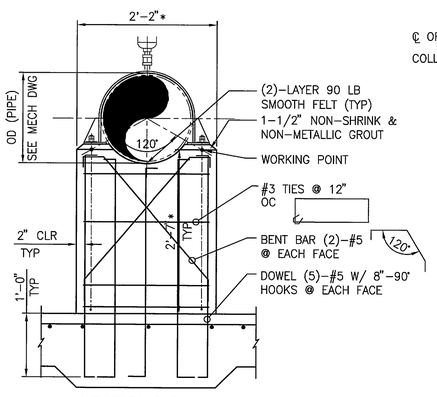

SECTION A-A

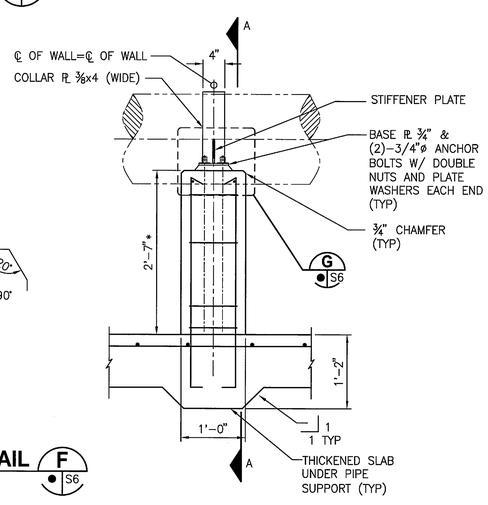

PIPE SUPPORT DETAIL F
1" = 1'-0" S6

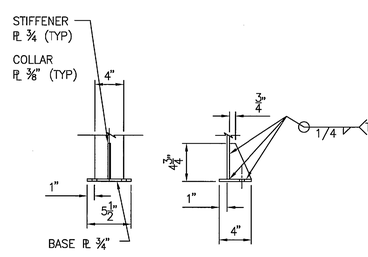

COLLAR ANCHOR BRACKET G
1 1/2" = 1'-0" S6

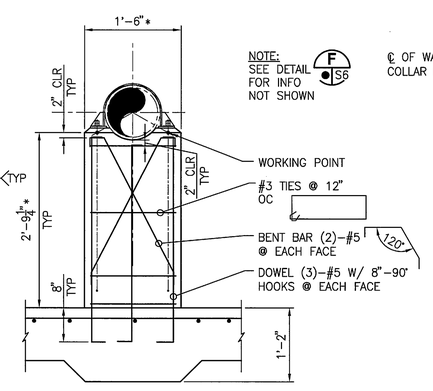

SECTION A-A

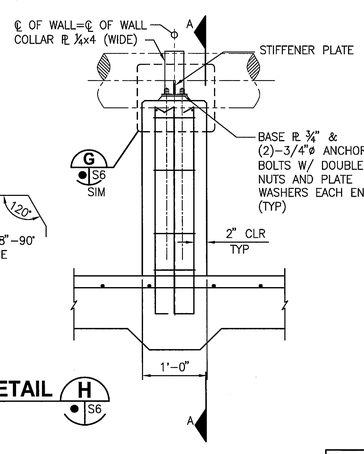

PIPE SUPPORT DETAIL H
1" = 1'-0" S6

THIS SPACE RESERVED

SYM	ZONE	DESCRIPTION	DATE	APPROVED
A		ADDED SHEET - INITIAL RELEASE TO EDL	12/05/11	KM

REVISIONS

THIS DRAWING CREATED IN AUTOCAD 2010 FILE FORMAT AND WILL BE REVISED ONLY ON AN AUTOCAD SYSTEM. FILE: 14000189-DP5-S06.DWG

JONES EDMUNDS
730 NE WALDO ROAD, GAINESVILLE, FLORIDA 32641 / (352) 377-5821
3910 S WASHINGTON AVE, SUITE 210, TITUSVILLE, FLORIDA 32780 / (321) 269-2950

SIGNATURES	DATE
DRAWN S. HAFERKAMP	12/05/11
CHECKED N. PONTILLO	12/05/11
SUBMITTED W. LI	12/05/11
ST of LICENSURE: FL LICENSE NO: 56104	
APPROVED M. CLARK	12/5/11
K. MILLER	12/5/11

NATIONAL AERONAUTICS AND SPACE ADMINISTRATION
JOHN F. KENNEDY SPACE CENTER, NASA
KENNEDY SPACE CENTER, FLORIDA

REVITALIZE WATER & WASTEWATER SYSTEMS - VOLUME 5 OF 5
W1 PUMP STATION REPLACEMENT

PIPE SUPPORT DETAILS

S6

FILE NO.	SIZE	DWG. NO.	REV
	F	79K38877 VOL 5	A
PROJ. NO. 96968.3		SHEET 32	

NOTICE: When Government drawings, specifications, or other data are used for any purpose other than in connection with a definitely related Government procurement operation, the United States Government thereby incurs no responsibility nor obligation whatsoever; and the fact that the Government may have formulated, furnished, or in any way supplied the said drawings, specifications or other data is not to be regarded by implication or otherwise as in any manner licensing the holder or any other person or corporation, or conveying any rights or permission to manufacture, use, or sell any patented invention that may in any way be related thereto.

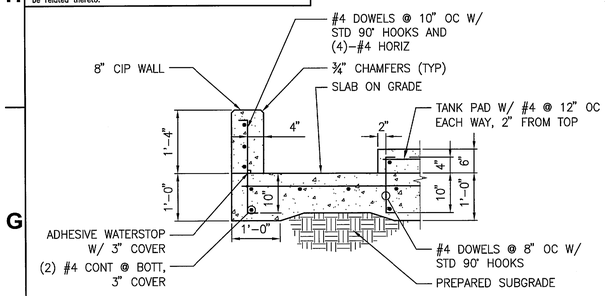

DETAIL 1 (3/4" = 1'-0") ● S7

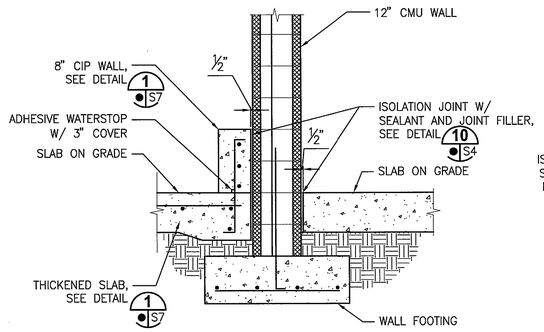

DETAIL 2 (3/4" = 1'-0") ● S7

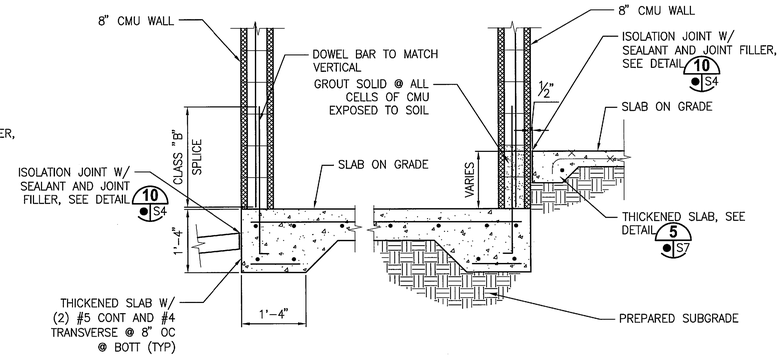

DETAIL 3 (3/4" = 1'-0") ● S7

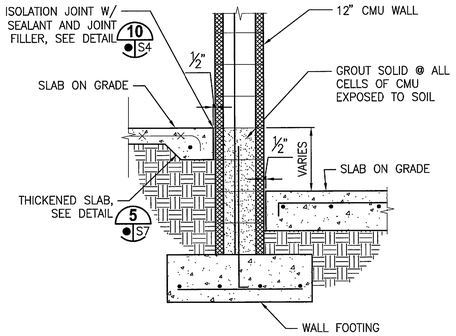

DETAIL 4 (3/4" = 1'-0") ● S7

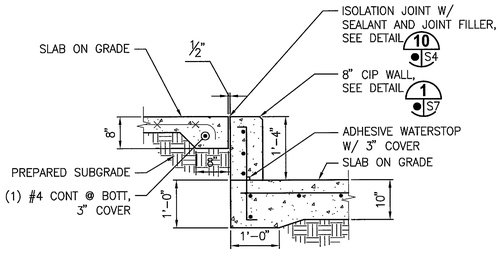

DETAIL 5 (3/4" = 1'-0") ● S7

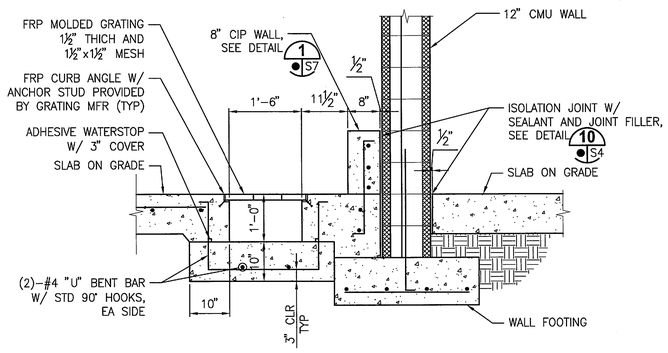

DETAIL 6 (3/4" = 1'-0") ● S7

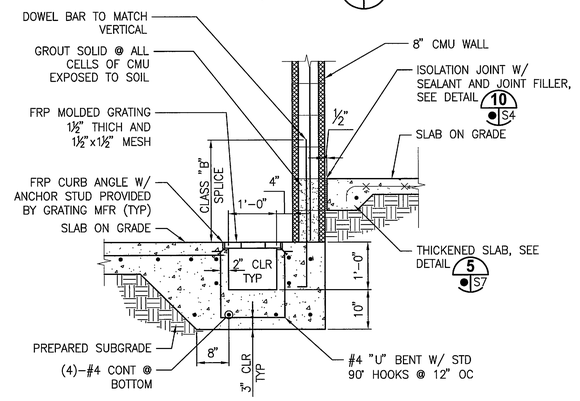

DETAIL 7 (3/4" = 1'-0") ● S7

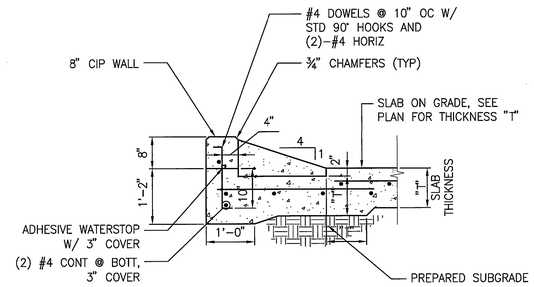

DETAIL 8 (3/4" = 1'-0") ● S7

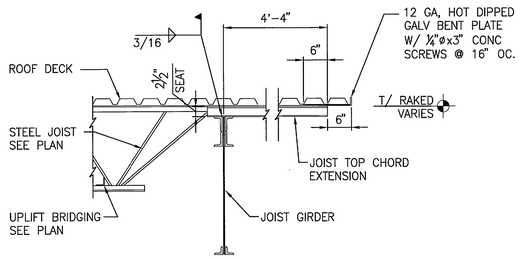

JOIST BEARING AT JOIST GIRDER (9)
3/4" = 1'-0" ● S7

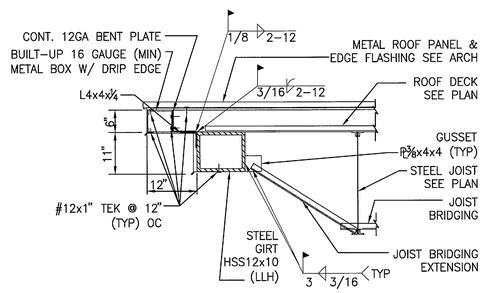

JOIST BRIDGING AT TUBING GIRT (10)
NTS ● S7

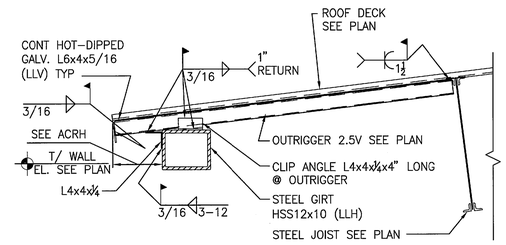

ROOF OVERHANG AT TUBING GIRT (11)
3/4" = 1'-0" ● S7

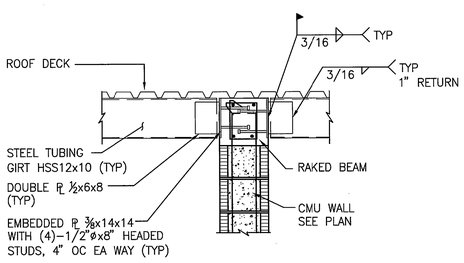

GIRT AT RAKED BEAM CONNECTION (12)
3/4" = 1'-0" ● S7

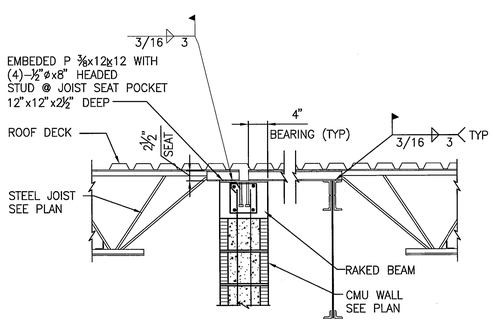

JOIST BRIDGING AT RAKED BEAM (13)
NTS ● S7

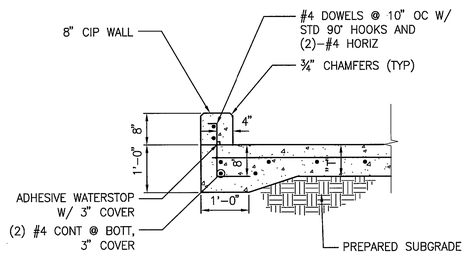

DETAIL 14 (3/4" = 1'-0") ● S7

GRAPHIC SCALE
0 0.5 1 2
SCALE IN FEET
3/4"=1'-0"

THIS SPACE RESERVED

SYM	ZONE	DESCRIPTION	DATE	APPROVED
A		ADDED SHEET - INITIAL RELEASE TO EDC	12/05/11	KM

REVISIONS

THIS DRAWING CREATED IN AUTOCAD 2010 FILE FORMAT AND WILL BE REVISED ONLY ON AN AUTOCAD SYSTEM. FILE: 14000189-DP5-S07.DWG

JONES EDMUNDS
730 NE WALDO ROAD, GAINESVILLE, FLORIDA 32641 / (352) 377-5821
3910 S WASHINGTON AVE, SUITE 210, TITUSVILLE, FLORIDA 32780 / (321) 269-2950

SIGNATURES	DATE
DRAWN S. HAFERKAMP	12/05/11
CHECKED N. PONTILLO	12/05/11
SUBMITTED W. LI	12/05/11
ST of LICENSURE: FL LICENSE NO: 56104	
APPROVED M. CLARK	12/5/11
K. MILLER	12/5/11

NATIONAL AERONAUTICS AND SPACE ADMINISTRATION
JOHN F. KENNEDY SPACE CENTER, NASA
KENNEDY SPACE CENTER, FLORIDA

REVITALIZE WATER & WASTEWATER SYSTEMS - VOLUME 5 OF 5
W1 PUMP STATION REPLACEMENT

STRUCTURAL DETAILS

FILE NO.	SIZE	DWG. NO.	REV
	F	79K38877 VOL 5	A
PROJ. NO. 96968.3		SHEET 33	

S7

NOTICE: When Government drawings, specifications, or other data are used for any purpose other than in connection with a definitely related Government procurement operation, the United States Government thereby incurs no responsibility nor obligation whatsoever; and the fact that the Government may have formulated, furnished, or in any way supplied the said drawings, specifications or other data is not to be regarded by implication or otherwise as in any manner licensing the holder or any other person or corporation, or conveying any rights or permission to manufacture, use, or sell any patented invention that may in any way be related thereto.

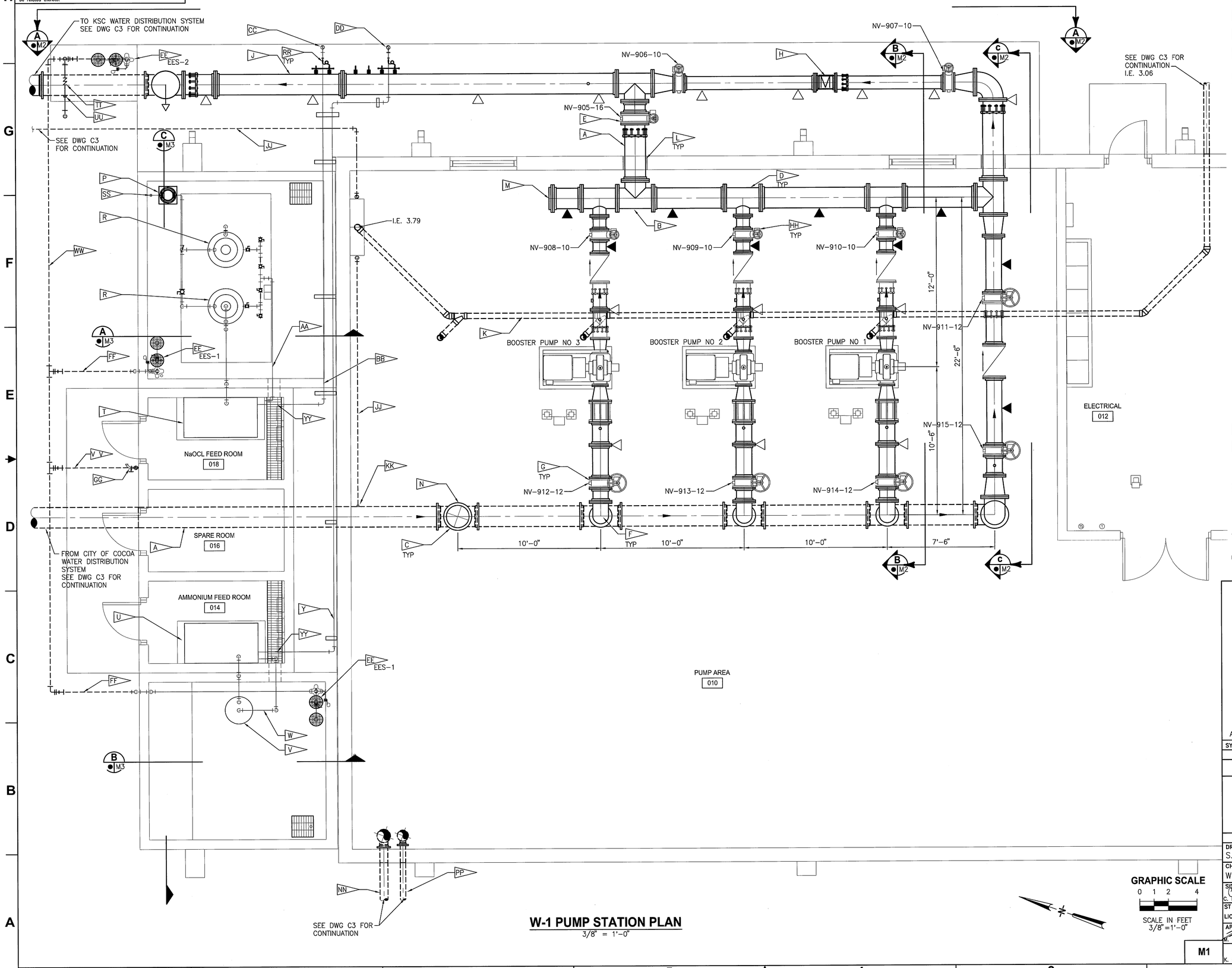

W-1 PUMP STATION PLAN

3/8" = 1'-0"

NOTES:

- A — 16" DI WM
- B — 16" FJ DI TEE
- C — 16"X12" RMJ DI RED TEE
- D — 16"X10" FJ DI RED TEE
- E — 16 BUTTERFLY VALVE (NORMALLY CLOSED)
- F — 12" FJ DI 90° BEND
- G — 12" BUTTERFLY VALVE
- H — 10" MAGNETIC FLOW METER
- J — 16" STATIC MIXER
- K — 4" PVC DRAIN MAINTAIN 1/8"/FT SLOPE
- L — WALL PENETRATION SEE DETAIL 16/S4
- M — 16" BLIND FLANGE
- N — FUTURE PIPE ACCESS SEE DETAIL 1/S2
- P — BAG FILTER
- R — 155 GAL NaOCL STORAGE TANK SYSTEM
- T — NaOCL TRIPLEX METERING PUMP SKID
- U — AMMONIUM SULFATE TRIPLEX METERING PUMP SKIP
- V — 55 GAL AMMONIUM SULFATE STORAGE DRUM
- W — 1" PVC AMMONIUM SULFATE PIPING
- Y — 3" PVC AMMONIUM SULFATE CONTAINMENT PIPE WITH 1/4" PVC CARRIER TUBING SLOPE TO FEED ROOM AT 1/8"/FT
- AA — 1" PVC NaOCL PIPING
- BB — 3" PVC NaOCL CONTAINMENT PIPE WITH 1/4" PVC CARRIER TUBING SLOPE TO FEED ROOM AT 1/8"/FT
- CC — NaOCL INJECTION POINT SEE DETAIL 1/M6
- DD — AMMONIUM SULFATE INJECTION POINT, SEE DETAIL 1/M6
- EE — EMERGENCY EYEWASH AND SHOWER, SEE DETAIL 3/M6
- FF — 1 1/4" PVC PWS
- GG — HOSE RACK SEE DETAIL 3/M5
- HH — 10" BUTTERFLY VALVE
- JJ — 1" PVC ANALYZER FEED
- KK — 1" SERVICE CONNECTION SEE DETAIL 1/C7 SIMILAR (NO BOX)
- LL — CONTRACTOR TO COORDINATE INSTALLATION WITH ELECTRICAL AND INSTRUMENTATION. SEE ELECTRICAL AND INSTRUMENTATION DRAWINGS FOR DETAILS AND LOCATIONS.
- MM — ALL PRESSURIZED PIPES, FITTINGS, VALVES, JOINTS FOR ALL SYSTEMS PRESENTED ON THIS DRAWING SHALL BE FULLY RESTRAINED.
- NN — 6" DI FIRE MAIN SEE DWG FP2
- PP — 4" DI FIRE MAIN SEE DWG FP2
- RR — CHEMICAL INJECTION. PROVIDE SUFFICIENT FLEXIBLE TUBING TO ALLOW FOR REMOVAL OF INJECTION ASSEMBLY FROM PROCESS PIPE. SEE DETAIL 1/M6
- SS — 2" QUICK CONNECT WITH DUST CAP
- TT — REDUCED PRESSURE BACKFLOW PREVENTER SEE DETAIL 2/M5
- UU — 2" SERVICE CONNECTION SEE DETAIL 1/C7
- VV — 3/4" PVC PWS
- WW — 2" PVC PWS
- YY — CONTAINMENT PIPE TO EXTEND 2" INTO FEED ROOM. END TO BE OPEN.

SYMBOL LEGEND

- U-BOLT TYPE PIPE SUPPORT SEE DETAIL 1/M4
- CONCRETE PIPE SUPPORT SEE DWG M2 FOR REQUIRMENTS
- NON-METALLIC PIPE SUPPORT SEE DETAIL 4/M4

THIS SPACE RESERVED

SYM	ZONE	DESCRIPTION	DATE	APPROVED
A		ADDED SHEET. INITIAL RELEASE TO EDC	12/05/11	KM

REVISIONS

THIS DRAWING CREATED IN AUTOCAD 2010 FILE FORMAT AND WILL BE REVISED ONLY ON AN AUTOCAD SYSTEM. FILE: 14000189-DP5-M01.DWG

JONES EDMUNDS
730 NE WALDO ROAD, GAINESVILLE, FLORIDA 32641 / (352) 377-5821
3910 S WASHINGTON AVE, SUITE 210, TITUSVILLE, FLORIDA 32780 / (321) 269-2950

SIGNATURES	DATE
DRAWN S. HAFERKAMP	12/05/11
CHECKED W. LEANHARDT	12/05/11
SUBMITTED C. BARRETT	12/05/11
ST of LICENSURE: FL LICENSE NO: 56047	
APPROVED M. CLARK	12/5/11
K. MILLER	12/6/11

NATIONAL AERONAUTICS AND SPACE ADMINISTRATION
JOHN F. KENNEDY SPACE CENTER, NASA
KENNEDY SPACE CENTER, FLORIDA

REVITALIZE WATER & WASTEWATER SYSTEMS - VOLUME 5 OF 5
W1 PUMP STATION REPLACEMENT

W-1 PUMP STATION PLAN

FILE NO.	SIZE	DWG. NO.	REV
	F	79K38877 VOL 5	A

PROJ. NO. 96968.3 SHEET 34

M1

NOTICE: When Government drawings, specifications, or other data are used for any purpose other than in connection with a definitely related Government procurement operation, the United States Government thereby incurs no responsibility nor obligation whatsoever; and the fact that the Government may have formulated, furnished, or in any way supplied the said drawings, specifications or other data is not to be regarded by implication or otherwise as in any manner licensing the holder or any other person or corporation, or conveying any rights or permission to manufacture, use, or sell any patented invention that may in any way be related thereto.

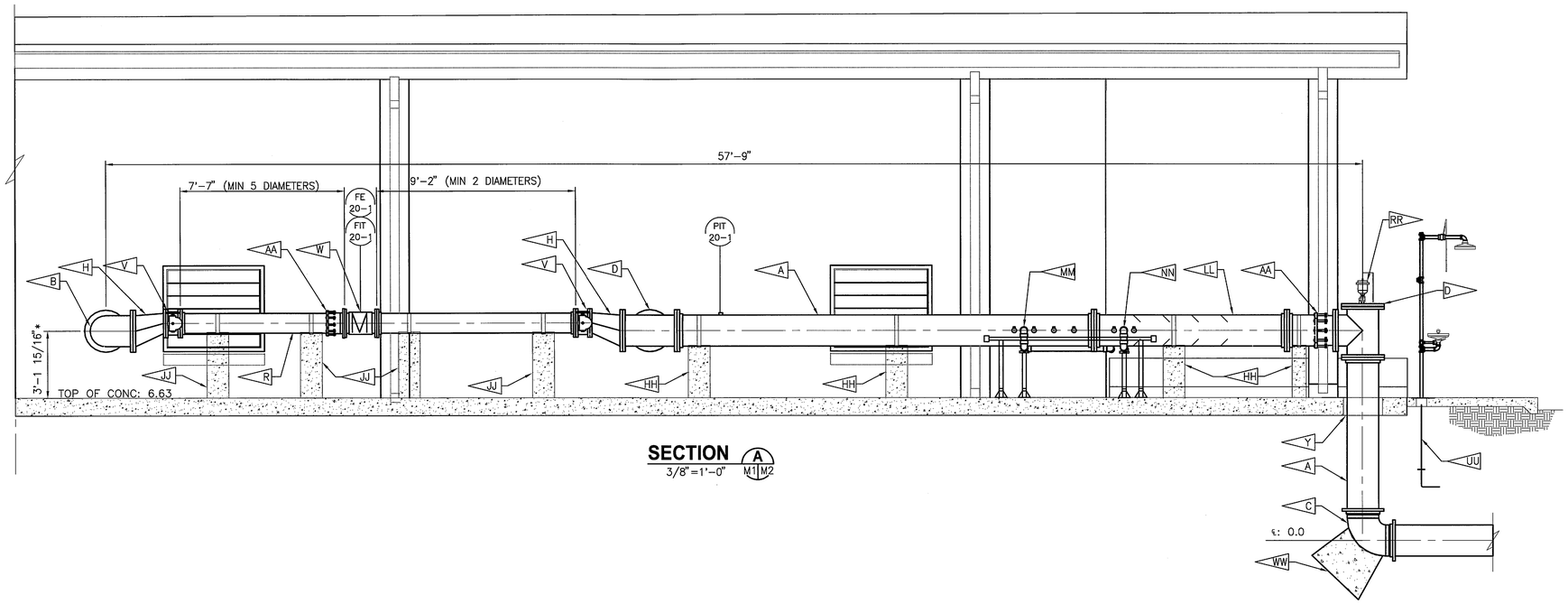

SECTION A
3/8"=1'-0" M1 M2

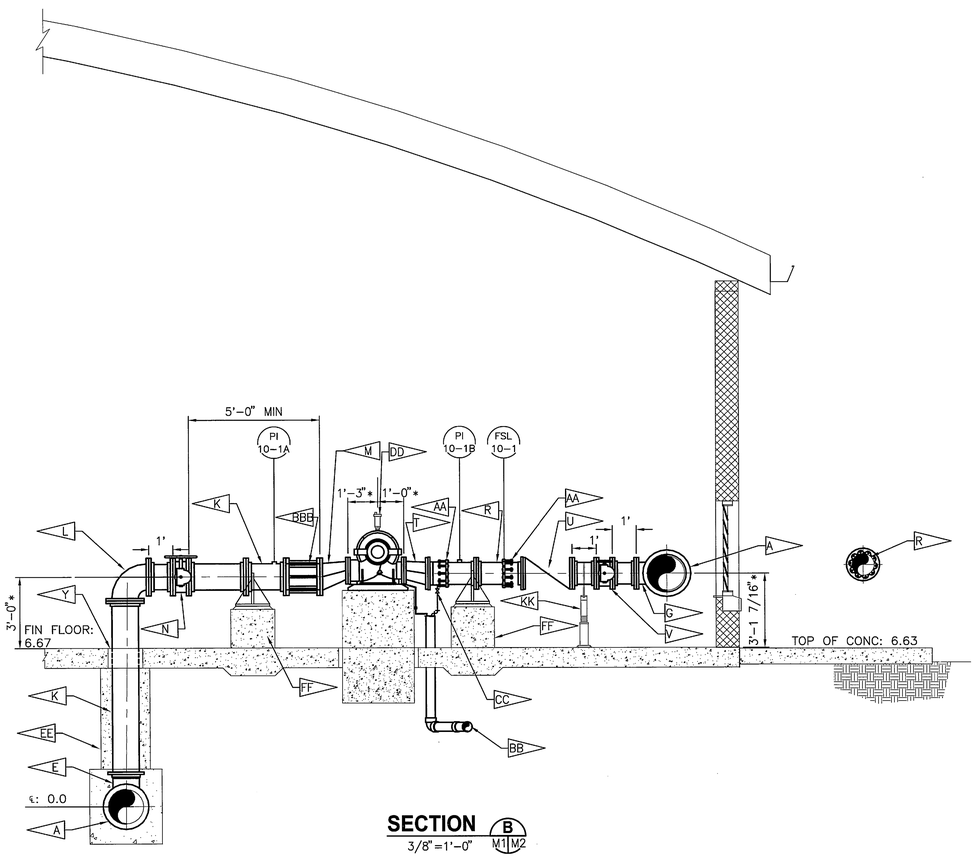

SECTION B
3/8"=1'-0" M1 M2

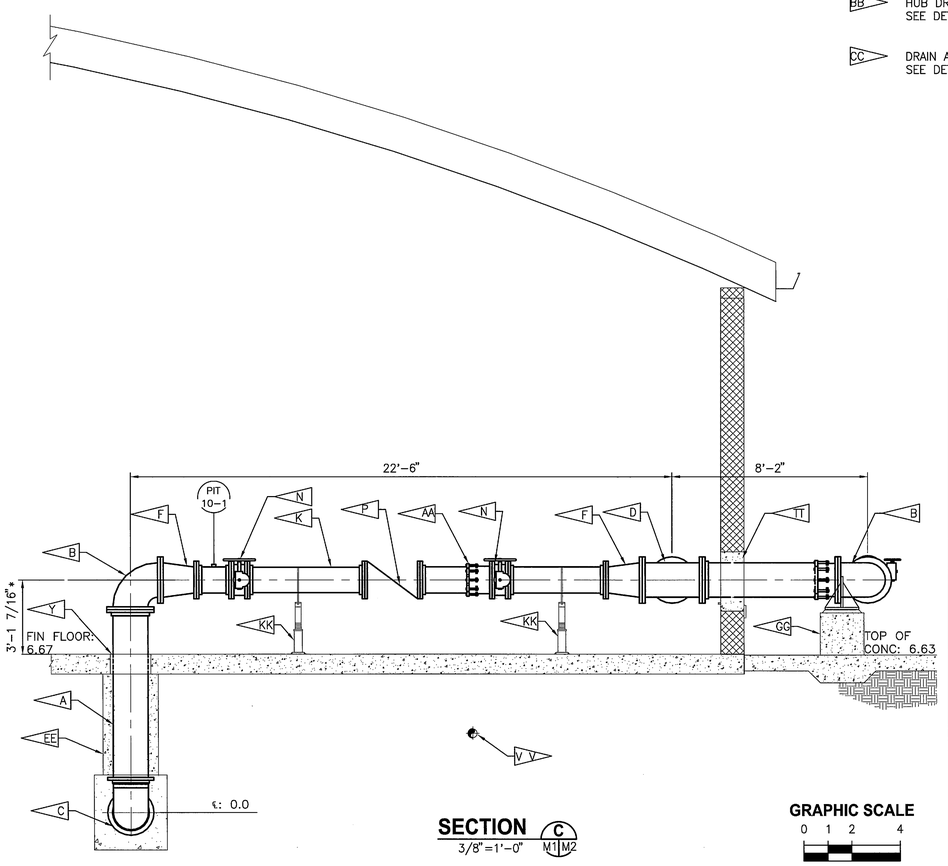

SECTION C
3/8"=1'-0" M1 M2

GRAPHIC SCALE
0 1 2 4
SCALE IN FEET
3/8"=1'-0"

NOTES:

- A — 16" DI WM
- B — 16" FJ DI 90° BEND
- C — 16" RMJ DI 90° BEND
- D — 16" FJ DI TEE
- E — 16"X12" RMJ DI RED TEE
- F — 16"X12" FJ DI RED
- G — 16"X10" FJ DI RED TEE
- H — 16"X10" FJ DI ECC RED
- J — NOT USED
- K — 12" DI WM
- L — 12" FJ DI 90° BEND
- M — 12"X8" FJ DI ECC RED
- N — 12" BUTTERFLY VALVE
- P — 12" CHECK VALVE
- R — 10" DI WM
- T — 10"X8" FJ DI ECC RED
- U — 10" CHECK VALVE
- V — 10" BUTTERFLY VALVE
- W — 10" MAGNETIC FLOW METER
- Y — EXPANSION JOINT FILLER
- AA — FLANGED COUPLING ADAPTER SEE DETAIL 4 M2 M6
- BB — HUB DRAIN SEE DETAIL 5 M2 M6
- CC — DRAIN ASSEMBLY SEE DETAIL 6 M2 M6
- DD — PUMP AIR RELEASE SEE DETAIL 4 M2 M5
- EE — CONCRETE PIPE ENCASEMENT SEE DETAIL 2 M2 M4
- FF — CONCRETE PIPE SUPPORT SEE DETAIL D S6
- GG — CONCRETE PIPE SUPPORT SEE DETAIL E S6
- HH — CONCRETE PIPE SUPPORT SEE DETAIL F S6
- JJ — CONCRETE PIPE SUPPORT SEE DETAIL H S6
- KK — U-BOLT TYPE PIPE SUPPORT SEE DETAIL 1 M2 M4
- LL — 16" STATIC MIXER
- MM — 3" PVC AMMONIUM SULFATE CONTAINMENT
- NN — 3" PVC SODIUM HYPOCHLORITE CONTAINMENT
- PP — NOT USED
- RR — 2" AIR/ VACUUM VALVE SEE DETAIL 1 M2 M5
- TT — WALL PENETRATION SEE DETAIL 16 S4
- UU — 1 1/4" PVC PWS
- VV — 4" PVC DRAIN MAINTAIN 1/8"/FT SLOPE
- WW — THRUST BLOCK SEE DETAIL 3 C9
- YY — * DENOTES VERIFICATION AND/OR COORDINATION BY THE CONTRACTOR IS REQUIRED WITH RESPECT TO APPROVED SHOP DRAWINGS PRIOR TO CONSTRUCTION.
- AAA — HORIZONTAL CLEARANCE FROM CONCRETE PIPE SUPPORT AND VERTICAL CLEARANCE FROM FLOOR TO SLANTING DISC CHECK VALVE DASHPOT REQUIRED FOR DASHPOT REMOVAL.
- BBB — 12" PUMP EXPANSION JOINT COUPLING

THIS SPACE RESERVED

SYM	ZONE	DESCRIPTION	DATE	APPROVED
A		ADDED SHEET - INITIAL RELEASE TO EDC	12/05/11	KCM

REVISIONS

THIS DRAWING CREATED IN AUTOCAD 2010 FILE FORMAT AND WILL BE REVISED ONLY ON AN AUTOCAD SYSTEM. FILE: 14000189-DP5-M02.DWG

JONES EDMUNDS
730 NE WALDO ROAD, GAINESVILLE, FLORIDA 32641 / (352) 377-5821
3910 S WASHINGTON AVE, SUITE 210, TITUSVILLE, FLORIDA 32780 / (321) 269-2950

SIGNATURES	DATE
DRAWN S. HAFERKAMP	12/05/11
CHECKED W. LEANHARDT	12/05/11
SUBMITTED C. BAGGETT	12/05/11
ST of LICENSURE: FL LICENSE NO: 56047	
APPROVED M. CLARK	12/5/11
K. MILLER	12/5/11

NATIONAL AERONAUTICS AND SPACE ADMINISTRATION
JOHN F. KENNEDY SPACE CENTER, NASA
KENNEDY SPACE CENTER, FLORIDA

REVITALIZE WATER & WASTEWATER SYSTEMS - VOLUME 5 OF 5
W1 PUMP STATION REPLACEMENT
W-1 PUMP STATION SECTIONS

FILE NO.	SIZE	DWG. NO.	REV
	F	79K38877 VOL 5	

PROJ. NO. 96968.3 SHEET 35

M2

NOTICE: When Government drawings, specifications, or other data are used for any purpose other than in connection with a definitely related Government procurement operation, the United States Government thereby incurs no responsibility nor obligation whatsoever; and the fact that the Government may have formulated, furnished, or in any way supplied the said drawings, specifications or other data is not to be regarded by implication or otherwise as in any manner licensing the holder or any other person or corporation, or conveying any rights or permission to manufacture, use, or sell any patented invention that may in any way be related thereto.

NAOCL STORAGE AREA

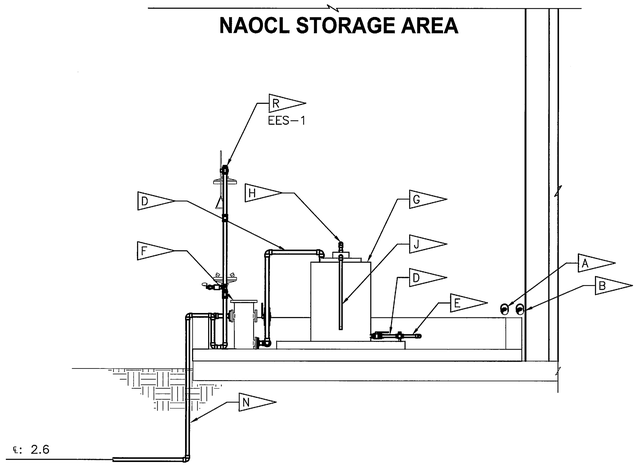

SECTION A
3/8" = 1'-0" M1 M3

AMMONIUM SULFATE STORAGE AREA

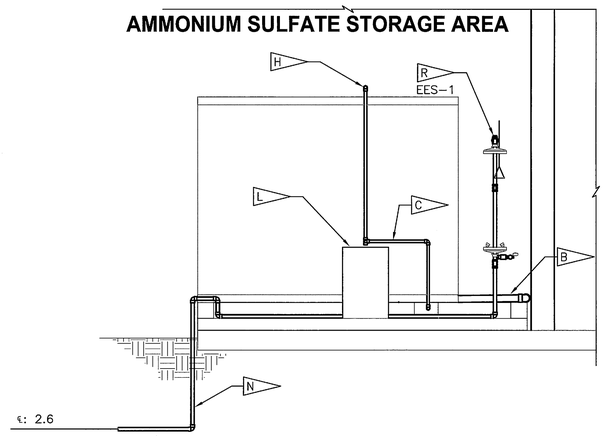

SECTION B
3/8" = 1'-0" M1 M3

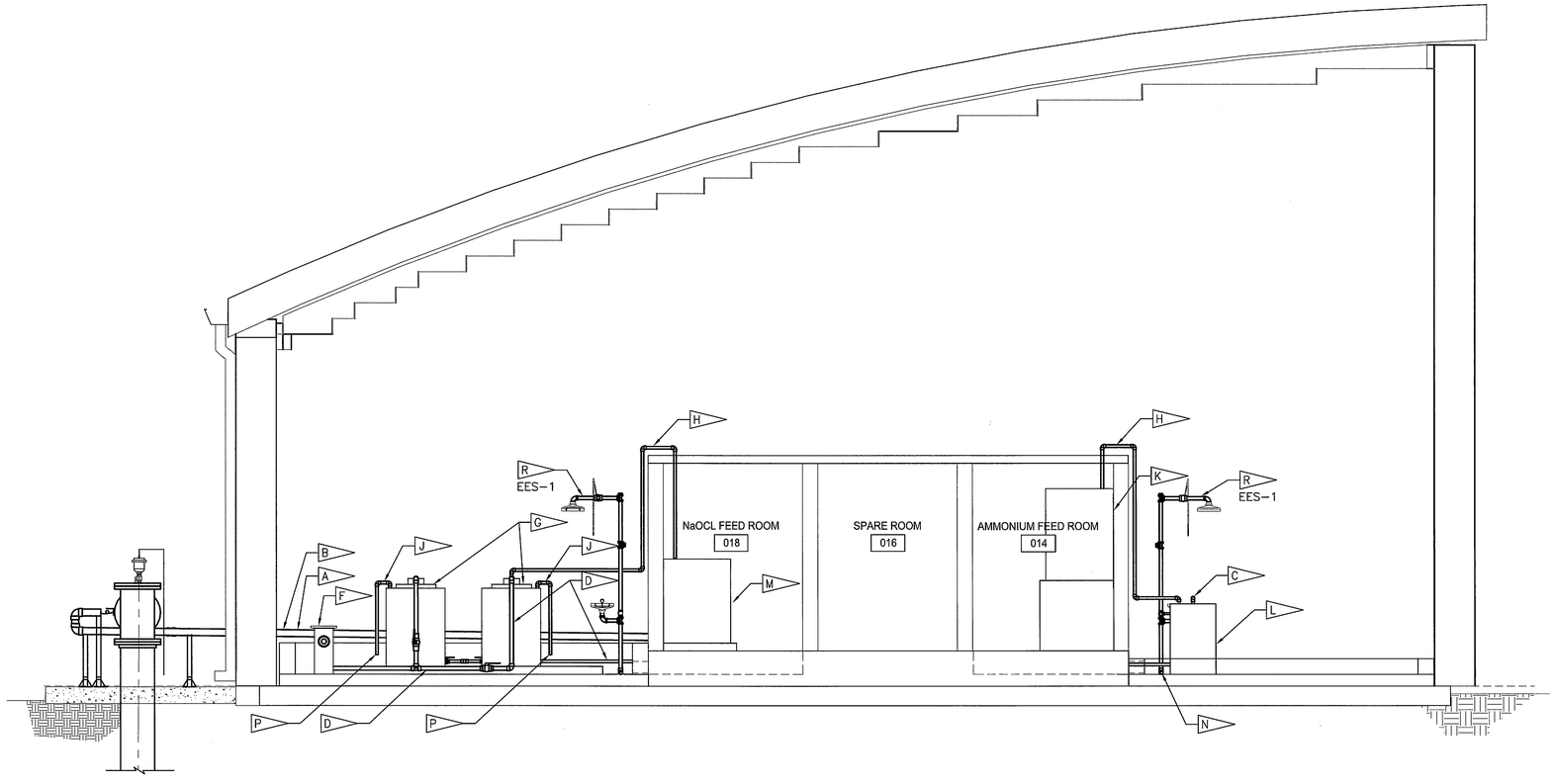

SECTION C
3/8" = 1'-0" M1 M3

NOTES:

- A — 3" PVC NaOCL CONTAINMENT PIPE. 1/4" PVC CARRIER TUBING. SLOPE TO FEED ROOM. MOUNT WITH NON-METALLIC PIPE SUPPORTS. SEE DETAIL 4/M4
- B — 3" PVC AMMONIUM SULFATE CONTAINMENT PIPE. 1/4" PVC CARRIER TUBING. SLOPE TO FEED ROOM. MOUNT WITH NON-METALIC PIPE SUPPORTS. SEE DETAIL 4/M4
- C — 1" PVC AMMONIUM SULFATE
- D — 1" PVC NaOCL
- E — FOR PIPING COMPONENT DETAIL SEE SHEET I4
- F — BAG FILTER
- G — 155 GAL NaOCL STORAGE TANK
- H — 1" PVC VENT
- J — 1" PVC OVERFLOW
- K — AMMONIUM FEED PUMP SKIP
- L — 55 GAL GAL AMMONIUM SULFATE DRUM (USE EXISTING DRUM SUPPLIED BY DUMONT)
- M — NaOCL FEED PUMP SKID
- N — 1 1/4" PVC PWS
- P — FIBERGLASS BUG SCREEN WITH FIBERGLASS CLAMP
- R — EMERGENCY EYEWASH AND SHOWER SEE DETAIL 3/M6
- T — UNLESS A SPECIFIC PIPE SUPPORT IS SHOWN, THE CONTRACTOR MAY SELECT AND INSTALL, WITH APPROVAL OF THE CO, PIPE SUPPORTS SHOW ON DETAILS 3/M4 4/M4 TO SUPPORT CHEMICAL PIPING

GRAPHIC SCALE
0 1 2 4
SCALE IN FEET
3/8"=1'-0"

M3

THIS SPACE RESERVED

SYM	ZONE	DESCRIPTION	DATE	APPROVED
A		ADDED SHEET - INITIAL RELEASE TO EDC	12/05/11	

REVISIONS

THIS DRAWING CREATED IN AUTOCAD 2010 FILE FORMAT AND WILL BE REVISED ONLY ON AN AUTOCAD SYSTEM. FILE: 14000189-DP5-M03.DWG

JONES EDMUNDS
730 NE WALDO ROAD, GAINESVILLE, FLORIDA 32641 / (352) 377-5821
3910 S WASHINGTON AVE, SUITE 210, TITUSVILLE, FLORIDA 32780 / (321) 269-2950

SIGNATURES	DATE
DRAWN S. HAFERKAMP	12/05/11
CHECKED W. LEANHARDT	12/05/11
SUBMITTED C. BAGGETT	12/05/11
ST of LICENSURE: FL LICENSE NO: 56047	
APPROVED M. CLARK	12/5/11
K. MILLER	12/5/11

NATIONAL AERONAUTICS AND SPACE ADMINISTRATION
JOHN F. KENNEDY SPACE CENTER, NASA
KENNEDY SPACE CENTER, FLORIDA

REVITALIZE WATER & WASTEWATER SYSTEMS - VOLUME 5 OF 5
W1 PUMP STATION REPLACEMENT

CHEMICAL STORAGE AREA SECTIONS

FILE NO.	SIZE	DWG. NO.	REV
	F	79K38877 VOL 5	A

PROJ. NO. 96968.3 | SHEET 36

NOTICE: When Government drawings, specifications, or other data are used for any purpose other than in connection with a definitely related Government procurement operation, the United States Government thereby incurs no responsibility nor obligation whatsoever; and the fact that the Government may have formulated, furnished, or in any way supplied the said drawings, specifications or other data is not to be regarded by implication or otherwise as in any manner licensing the holder or any other person or corporation, or conveying any rights or permission to manufacture, use, or sell any patented invention that may in any way be related thereto.

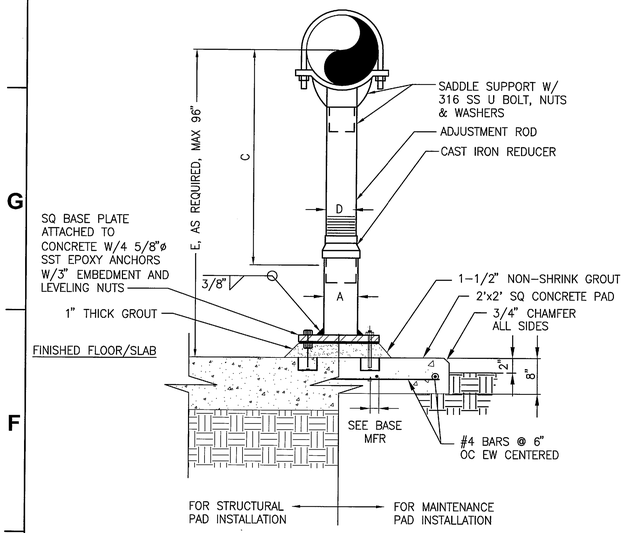

U-BOLT TYPE PIPE SUPPORT DETAIL (1)

NTS M4

TYPICAL PIPE SUPPORT DIMENSION TABLE

PIPE SIZE	A	B	C MIN	C MAX	D
INCHES					
10	4	9	13 1/2	18 1/4	3
12	4	9	15	19 3/4	3
16	4	11	17 3/4	22 1/4	3

NOTES:
1. HOT DIP GALVANIZE ENTIRE PIPE SUPPORT AND STEEL BASE PLATE AFTER FABRICATION (EXCEPT FOR STAINLESS STEEL FASTENING HARDWARE).
2. ALL HARDWARE SHALL BE 316 SS.
3. PROVIDE NEOPRENE WAFFLE ISOLATION PAD, KORFUND KORPAD 40 UNDER SUPPORT FOOT WHEN PIPING IS ISOLATED OR SUPPORT IS ADJACENT TO MECHANICAL EQUIPMENT.
4. SEE PLANS AND SECTIONS FOR PIPE CENTERLINE ELEVATION REQUIREMENTS.
5. PROVIDE RIGID INSULATION PROTECTION SHIELD WHERE PIPING IS INSULATED.
6. BASE PLATES SHALL BE SQUARE AND BE 1/2-INCH THICK FOR PIPE SIZES THROUGH 10-INCH. FOR ALL LARGER PIPES BEING SUPPORTED, THE BASE PLATES SHALL BE 3/4-INCH THICK.

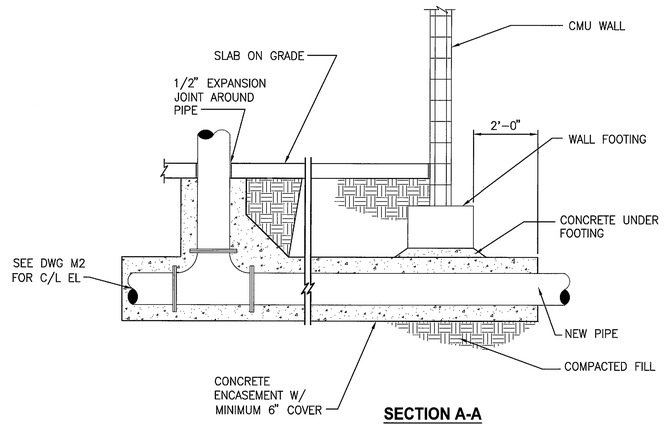

SECTION A-A

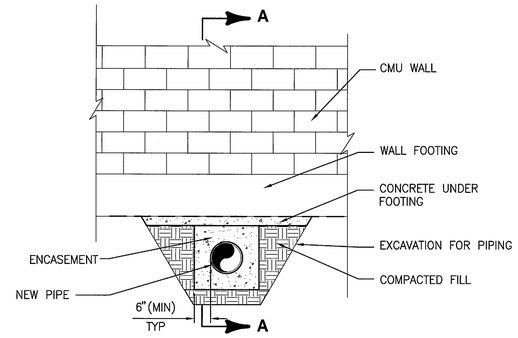

TYPICAL PIPE ENCASEMENT DETAIL (2)

NTS M2 M4

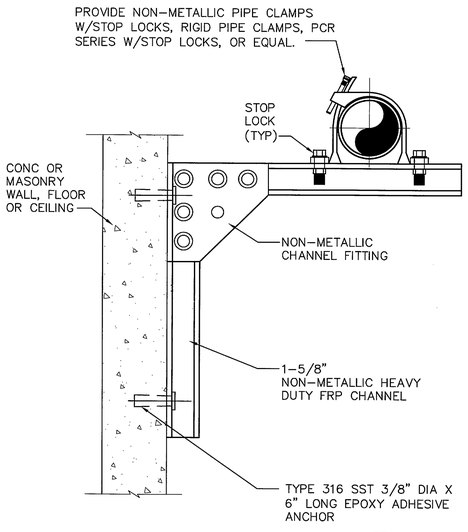

NON-METALLIC WALL BRACKET (3)

NTS M4

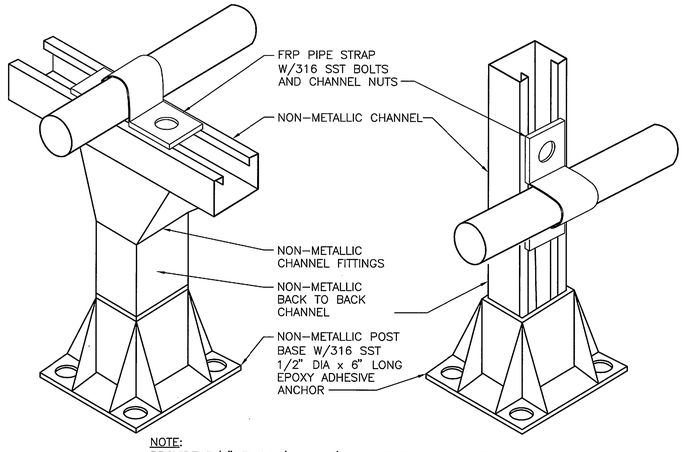

NOTE:
PROVIDE 3/4" THICK (NOMINAL) NON-SHRINK NON-METALLIC EPOXY GROUT AS NECESSARY TO PROVIDE LEVEL/ PLUMB INSTALLATION.

NON-METALLIC PIPE SUPPORT (4)

NTS M4

THIS SPACE RESERVED

SYM	ZONE	DESCRIPTION	DATE	APPROVED
A		ADDED SHEET - INITIAL RELEASE TO EDC	12/05/11	KM

REVISIONS

THIS DRAWING CREATED IN AUTOCAD 2010 FILE FORMAT AND WILL BE REVISED ONLY ON AN AUTOCAD SYSTEM. FILE: 14000189-DP5-M04.DWG

JONES EDMUNDS
730 NE WALDO ROAD, GAINESVILLE, FLORIDA 32641 / (352) 377-5821
3910 S WASHINGTON AVE, SUITE 210, TITUSVILLE, FLORIDA 32780 / (321) 269-2950

SIGNATURES	DATE
DRAWN S. HAFERKAMP	12/05/11
CHECKED W. LEANHARDT	12/05/11
SUBMITTED C. BAGGETT	12/05/11
ST of LICENSURE: FL LICENSE NO: 56047	
APPROVED M. CLARK	12/5/11
K. MILLER	12/5/11

NATIONAL AERONAUTICS AND SPACE ADMINISTRATION
JOHN F. KENNEDY SPACE CENTER, NASA
KENNEDY SPACE CENTER, FLORIDA

REVITALIZE WATER & WASTEWATER SYSTEMS - VOLUME 5 OF 5
W1 PUMP STATION REPLACEMENT

MECHANICAL DETAILS

FILE NO.	SIZE	DWG. NO.	REV
	F	79K38877 VOL 5	A

PROJ. NO. 96968.3 SHEET 37

M4

SSC FORM 1-11 (3/76)(C/G 3/94)

NOTICE: When Government drawings, specifications, or other data are used for any purpose other than in connection with a definitely related Government procurement operation, the United States Government thereby incurs no responsibility nor obligation whatsoever; and the fact that the Government may have formulated, furnished, or in any way supplied the said drawings, specifications or other data is not to be regarded by implication or otherwise as in any manner licensing the holder or any other person or corporation, or conveying any rights or permission to manufacture, use, or sell any patented invention that may in any way be related thereto.

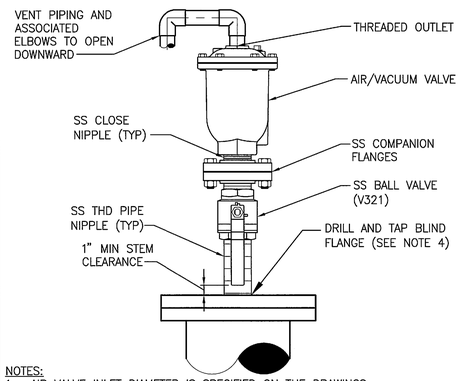

NOTES:
1. AIR VALVE INLET DIAMETER IS SPECIFIED ON THE DRAWINGS.
2. BALL VALVE AND NIPPLES SHALL HAVE THE SAME DIAMETER AS THE AIR VALVE INLET.
3. SEE PLANS FOR VALVE TYPE.
4. VERIFY SIZE OF VALVE PRIOR TO ORDERING ANCILLARY PARTS, DRILLING OR TAPPING.
5. EXTEND VENT TO 6" AFF, PROVIDE SS BUG SCREEN, AND UNI-STRUT SUPPORT.

COMBINATION AIR VALVE DETAIL (1 / M5)
NTS

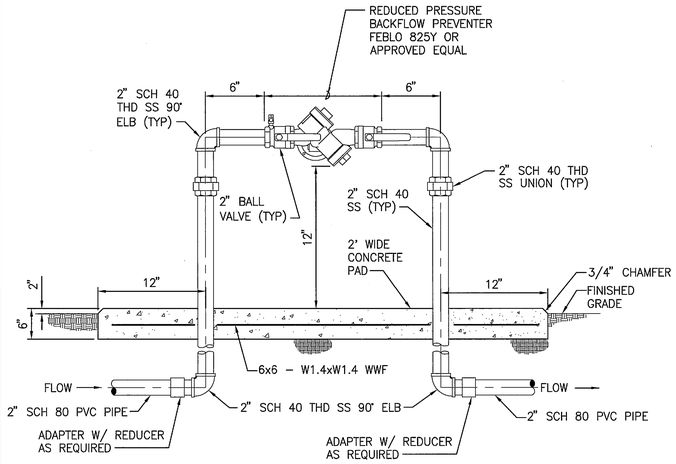

NOTES:
1. SIZE OF METER, ADAPTERS, ETC. SHALL BE THE SAME AS THE SERVICE LINE SHOWN ON THE PLAN.
2. INSULATE ABOVE GRADE PIPING AND BACKFLOW PREVENTER ASSEMBLY.

REDUCED PRESSURE BACKFLOW PREVENTER DETAIL (2 / M5)
NTS

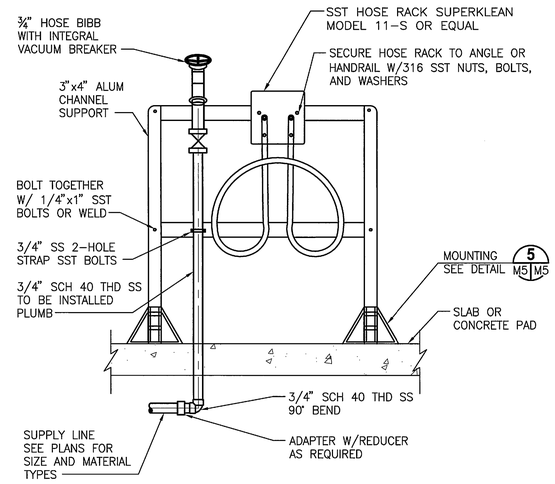

HOSE RACK ASSEMBLY (3 / M5)
NTS

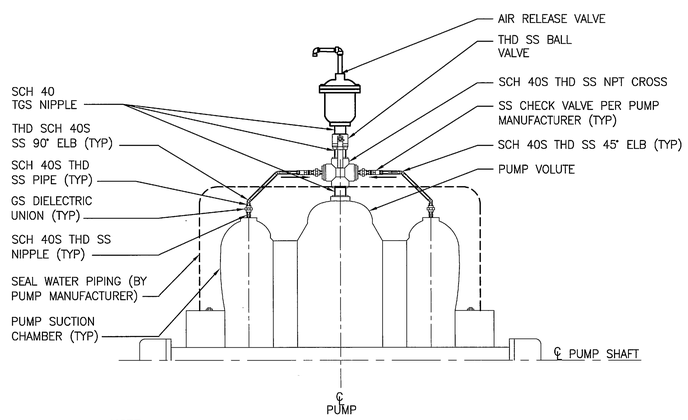

NOTE:
1. SIZE OF PIPING, FITTINGS, AIR VALVE, ETC SHALL BE PER MANUFACTURER'S RECOMMENDATION.

PUMP AIR RELEASE DETAIL (4 / M2 M5)
NTS

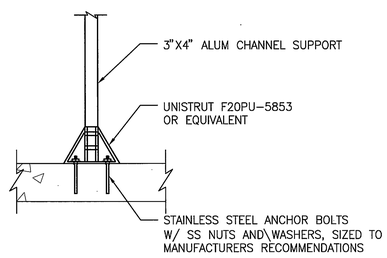

MOUNTING DETAIL (5 / M5 M5)
NTS

THIS SPACE RESERVED

SYM	ZONE	DESCRIPTION	DATE	APPROVED
A		ADDED SHEET - INITIAL RELEASE TO EDC.	12/05/11	KM

REVISIONS

THIS DRAWING CREATED IN AUTOCAD 2010 FILE FORMAT AND WILL BE REVISED ONLY ON AN AUTOCAD SYSTEM. FILE: 14000189-DP5-M05.DWG

JONES EDMUNDS
730 NE WALDO ROAD, GAINESVILLE, FLORIDA 32641 / (352) 377-5821
3910 S WASHINGTON AVE, SUITE 210, TITUSVILLE, FLORIDA 32780 / (321) 269-2950

SIGNATURES	DATE
DRAWN S. HAFERKAMP	12/05/11
CHECKED W. LEANHARDT	12/05/11
SUBMITTED C. BAGGETT	12/05/11
ST of LICENSURE: FL LICENSE NO: 56047	
APPROVED M. CLARK	12/15/11
K. MILLER	12/6/11

NATIONAL AERONAUTICS AND SPACE ADMINISTRATION
JOHN F. KENNEDY SPACE CENTER, NASA
KENNEDY SPACE CENTER, FLORIDA

REVITALIZE WATER & WASTEWATER SYSTEMS - VOLUME 5 OF 5
W1 PUMP STATION REPLACEMENT

MECHANICAL DETAILS

FILE NO.	SIZE	DWG. NO.	REV
	F	79K38877 VOL 5	A
PROJ. NO. 96968.3		SHEET 38	

M5

NOTICE: When Government drawings, specifications, or other data are used for any purpose other than in connection with a definitely related Government procurement operation, the United States Government thereby incurs no responsibility nor obligation whatsoever; and the fact that the Government may have formulated, furnished, or in any way supplied the said drawings, specifications or other data is not to be regarded by implication or otherwise as in any manner licensing the holder or any other person or corporation, or conveying any rights or permission to manufacture, use, or sell any patented invention that may in any way be related thereto.

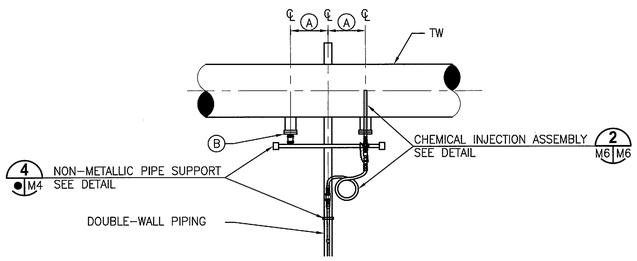

PLAN

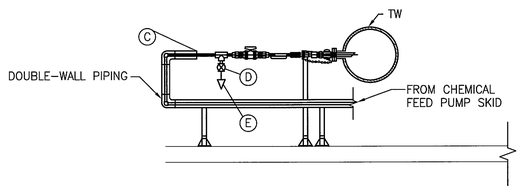

ILLUSTRATIVE SECTION

- (A) POSITION DOUBLE-WALL PIPING RISER EQUI-DISTANT BETWEEN PROCESS PIPE INJECTION CONNECTORS
- (B) CORP STOP WITH PLUG (BY INJECTION ASSEMBLY MFR) CONNECTED TO DRILLED AND TAPPED DI BLIND FLANGE
- (C) ANNULUS SEAL BY DOUBLE WALL PIPING MFR.
- (D) 1" PVC BV
- (E) QUICK CONNECT COUPLING MALE END W/ PADLOCKABLE CAP AND 316 SS CHAIN (DRAIN/FLUSHING CONNECTION)

CHEMICAL INJECTION DETAIL 1 / M6

NTS

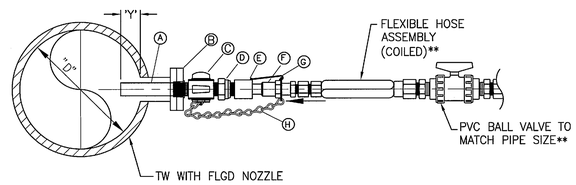

- (A) 1/2" SOLUTION DIFFUSER TUBE (HASTELLOY C-ALLOY 276)**
- (B) DI BLIND FLANGE DRILLED AND TAPPED FOR CORP STOP
- (C) HEAVY DUTY BRASS CORP STOP **
- (D) SOLUTION TUBE ADAPTER**
- (E) PACKING NUT**
- (F) SPRING LOADED BALL CHECK VALVE**
- (G) SAFETY LOCK**
- (H) SAFETY CHAIN**

NOTES:
1. ** DENOTES ITEM TO BE FURNISHED BY CHEMICAL INJECTION ASSEMBLY MFR (SEE SECTION 42 32 69).
2. DIMENSION "Y" IS 1/3 OF PIPE "D".

CHEMICAL INJECTION ASSEMBLY 2 / M6 M6

NTS

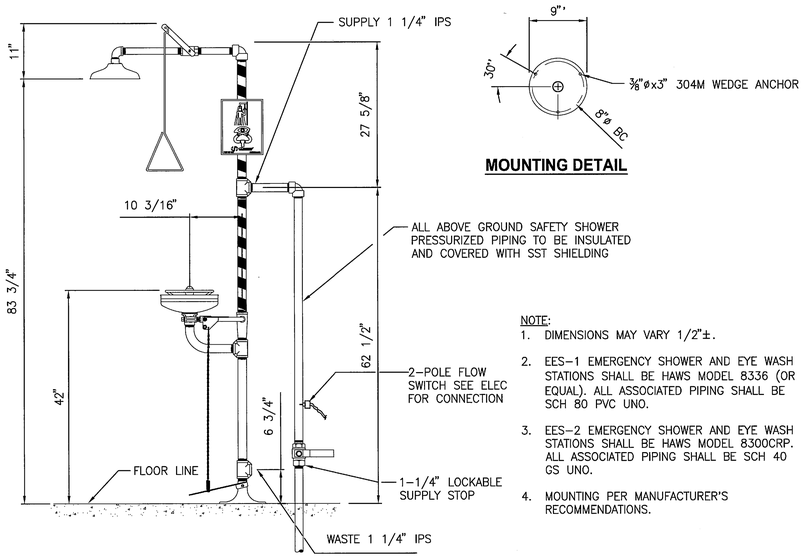

MOUNTING DETAIL

NOTE:
1. DIMENSIONS MAY VARY 1/2"±.
2. EES-1 EMERGENCY SHOWER AND EYE WASH STATIONS SHALL BE HAWS MODEL 8336 (OR EQUAL). ALL ASSOCIATED PIPING SHALL BE SCH 80 PVC UNO.
3. EES-2 EMERGENCY SHOWER AND EYE WASH STATIONS SHALL BE HAWS MODEL 8300CRP. ALL ASSOCIATED PIPING SHALL BE SCH 40 GS UNO.
4. MOUNTING PER MANUFACTURER'S RECOMMENDATIONS.

EMERGENCY EYEWASH AND SHOWER 3 / M1 M6

NTS

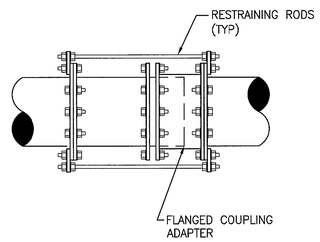

FLANGED COUPLING ADAPTER WITH RESTRAINING RODS 4 / M2 M6

NTS

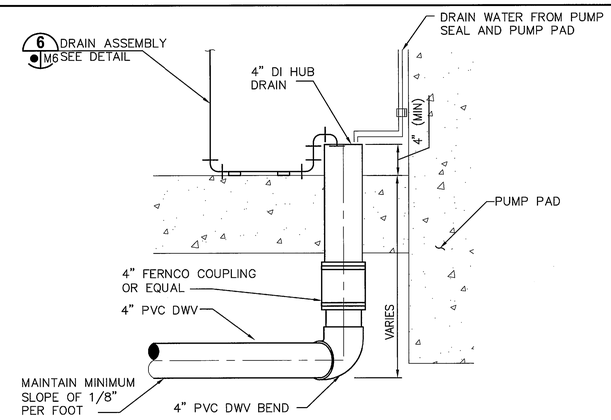

HUB DRAIN DETAIL 5 / M6

NTS

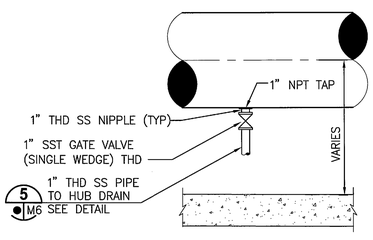

DRAIN ASSEMBLY DETAIL 6 / M6

NTS

THIS SPACE RESERVED

SYM	ZONE	DESCRIPTION	DATE	APPROVED
A		ADDED SHEET - INITIAL RELEASE TO EDC	12/05/11	KM

REVISIONS

THIS DRAWING CREATED IN AUTOCAD 2010 FILE FORMAT AND WILL BE REVISED ONLY ON AN AUTOCAD SYSTEM. FILE: 14000189-DP5-M06.DWG

JONES EDMUNDS
730 NE WALDO ROAD, GAINESVILLE, FLORIDA 32641 / (352) 377-5821
3910 S WASHINGTON AVE, SUITE 210, TITUSVILLE, FLORIDA 32780 / (321) 269-2950

SIGNATURES	DATE
DRAWN S. HAFERKAMP	12/05/11
CHECKED W. LEANHARDT	12/05/11
SUBMITTED C. BAGGETT	12/05/11
ST of LICENSURE: FL LICENSE NO: 56047	
APPROVED M. CLARK	12/15/11
K. MILLER	12/5/11

NATIONAL AERONAUTICS AND SPACE ADMINISTRATION
JOHN F. KENNEDY SPACE CENTER, NASA
KENNEDY SPACE CENTER, FLORIDA

REVITALIZE WATER & WASTEWATER SYSTEMS - VOLUME 5 OF 5
W1 PUMP STATION REPLACEMENT

MECHANICAL DETAILS

FILE NO.	SIZE	DWG. NO.	REV
	F	79K38877 VOL 5	A
PROJ. NO. 96968.3		SHEET 39	

M6

NOTICE: When Government drawings, specifications, or other data are used for any purpose other than in connection with a definitely related Government procurement operation, the United States Government thereby incurs no responsibility nor obligation whatsoever; and the fact that the Government may have formulated, furnished, or in any way supplied the said drawings, specifications or other data is not to be regarded by implication or otherwise as in any manner licensing the holder or any other person or corporation, or conveying any rights or permission to manufacture, use, or sell any patented invention that may in any way be related thereto.

SPECIFICATION REFERENCE NO 79K38878

PLANS LEGEND

SYMBOL	DESCRIPTION
	CONDUIT, CAP OR STUB-OUT
	CONDUIT, UP (MULTIPLE OR SINGLE)
	CONDUIT, DOWN (MULTIPLE OR SINGLE)
	CONDUIT, CONCEALED ABOVE CEILING
	CONDUIT, EXPOSED
	CONDUIT, IN FLOOR OR UNDERGROUND
	MULTIPLE CONDUIT RUN (UNDERGROUND UNLESS OTHERWISE INDICATED)
	INSTRUMENT, DESIGNATION AS INDICATED
M	MOTOR, HORSEPOWER INDICATED
	GROUND ROD, 3/4"x20'-0" COPPER CLAD
PB	ELECTRIC PULLBOX, NUMBER INDICATED
	DISCONNECT/SAFETY SWITCH, NEMA 4X SS, 3P UNLESS OTHERWISE NOTED, WITH 2 FORM "C" AUXILIARY CONTACTS, F=FUSED
G	GROUND CABLE

ONE-LINE DIAGRAM LEGEND

SYMBOL	DESCRIPTION
	AUTOMATIC TRANSFER SWITCH, AMPS AND POLES INDICATED
	HEAVY DUTY SAFETY SWITCH (FUSED IF INDICATED)
	DOUBLE THROW SAFETY SWITCH (FUSED IF INDICATED)
E	ELAPSED TIME METER
	EQUIPMENT OUTLINE
	FUSE
FIT-100	INSTRUMENT, DESIGNATION AS INDICATED
	SELECTOR SWITCH HAND OFF AUTOMATIC (HOA) ON-OFF (O-O) ON OFF REMOTE (OOR) VFD/BYPASS (V-B)
D	TIME DELAY RELAY (0-180 SEC)
P	PHASE MONITOR RELAY
	GROUND
PM	POWER MONITOR
M	MOTOR, HORSEPOWER INDICATED
	MOTOR CIRCUIT PROTECTOR (MCP) OR CIRCUIT BREAKER (TRIP AMPS INDICATED.) 3 POLE UNLESS OTHERWISE INDICATED
H	MOTOR SPACE HEATER
	MOTOR STARTER, COMBINATION WITH MCP FVNR= FULL VOLTAGE NON-REVERSING RVAT= REDUCED VOLTAGE AUTO-XFMR SSRV= SOLID STATE REDUCED VOLTAGE
CPT	TRANSFORMER, CONTROL POWER
	TRANSFORMER, POTENTIAL
	TRANSFORMER, POWER
SPD	SURGE PROTECTIVE DEVICE
T	TRANSFORMER, PAD MTD
	ULTRASONIC LEVEL TRANSMITTER
	GFCI DUPLEX RECEPTACLE
	ALARM HORN
R	ALARM STROBE
C	ISOLATION CONTACTOR
C	BYPASS CONTACTOR

GENERAL LEGEND

SYMBOL	DESCRIPTION
MCC-1	CIRCUIT REFERENCE, SEE SCHEDULES ON E8 & E9
#	FLAG NOTE CALLOUT
X	ON EQUIPMENT, INDICATES REMOVAL
	EQUIPMENT TO BE REMOVED
	EQUIPMENT TO BE RELOCATED

THESE ARE STANDARD LEGEND SHEETS. SOME SYMBOLS MAY APPEAR ON THE LEGEND AND NOT ON THE DRAWINGS.

IN GENERAL, LIGHT LINES INDICATE EXISTING OR WORK OF OTHER TRADES, BOLD LINES INDICATE NEW ELECTRICAL WORK.

THIS SPACE RESERVED

SYM	ZONE	DESCRIPTION	DATE	APPROVED
A		ADDED SHEET- INITIAL RELEASE TO EDC	12/05/11	KM

REVISIONS

THIS DRAWING CREATED IN AUTOCAD 2010 FILE FORMAT AND WILL BE REVISED ONLY ON AN AUTOCAD SYSTEM. FILE: 14000189-DP5-E01.DWG

JONES EDMUNDS
730 NE WALDO ROAD, GAINESVILLE, FLORIDA 32641 / (352) 377-5821
3910 S WASHINGTON AVE, SUITE 210, TITUSVILLE, FLORIDA 32780 / (321) 269-2950

SIGNATURES	DATE
DRAWN L. MILLER	12/05/11
CHECKED M. KOROS	12/05/11
SUBMITTED M. CLARK	12/05/11
ST of LICENSURE: FL LICENSE NO: 48898	
APPROVED M. CLARK	12/5/11
D. TRANG	12/5/11

NATIONAL AERONAUTICS AND SPACE ADMINISTRATION
JOHN F. KENNEDY SPACE CENTER, NASA
KENNEDY SPACE CENTER, FLORIDA

REVITALIZE WATER & WASTEWATER SYSTEMS - VOLUME 5 OF 5
W1 PUMP STATION REPLACEMENT

ELECTRICAL LEGENDS

FILE NO.	SIZE	DWG. NO.	REV
	F	79K38877 VOL 5	A
PROJ. NO. 96968.3		SHEET 40	

E1

NOTICE: When Government drawings, specifications, or other data are used for any purpose other than in connection with a definitely related Government procurement operation, the United States Government thereby incurs no responsibility nor obligation whatsoever; and the fact that the Government may have formulated, furnished, or in any way supplied the said drawings, specifications or other data is not to be regarded by implication or otherwise as in any manner licensing the holder or any other person or corporation, or conveying any rights or permission to manufacture, use, or sell any patented invention that may in any way be related thereto.

SPECIFICATION REFERENCE NO 79K38878

GENERAL ELECTRICAL NOTES

1. MULTIMODE FIBER OPTIC CABLES AND CONDUITS TO BE TERMINATED FOR TESTING, BUT NOT LANDED AT KCCS CONNECTION. PROVIDE 50' SPARE FIBER OPTIC CABLE COILED UP INSIDE OF FOT PANEL. PROVIDE CLEAR LABELING OF ALL CABLES IDENTIFYING SOURCE TO ALLOW PROPER TERMINATING BY OTHERS.

2. ALL WORK SHALL CONFORM TO THE LATEST ADOPTED EDITION OF THE NATIONAL ELECTRICAL CODE (NEC). GROUND ALL ELECTRICAL EQUIPMENT AND ENCLOSURES IN ACCORDANCE WITH THE NEC.

3. THE CONTRACT DOCUMENTS MAY NOT REFLECT ALL EXISTING UTILITIES OR SHOW THEM IN THEIR EXACT LOCATIONS. THE CONTRACTOR SHALL HAVE UTILITY LOCATES PERFORMED BEFORE BEGINNING EXCAVATION. THE CONTRACTOR SHALL HAND DIG AND VERIFY ALL EXISTING UTILITIES. THE CONTRACTOR SHALL REPAIR, AT CONTRACTOR EXPENSE, ANY SERVICE THAT IS INTERRUPTED BY THE CONTRACTOR WHETHER SHOWN OR NOT SHOWN ON THE CONTRACT DOCUMENTS. ALL REPAIRS SHALL BE APPROVED BY THE CO.

4. BEFORE BEGINNING WORK, ALL ELECTRICAL EQUIPMENT AND SYSTEMS SHALL BE OPERATED IN THE PRESENCE OF REPRESENTATIVES OF THE CONTRACTOR AND THE CO IN ORDER TO ESTABLISH THAT ALL SYSTEMS ARE IN PROPER WORKING ORDER AT THE START OF THE PROJECT. UPON COMPLETION OF THE ABOVE TEST, THE CONTRACTOR SHALL SUBMIT A DETAILED LISTING INDICATING ANY ITEMS NOTED WHICH ARE NOT IN FULLY OPERATIONAL CONDITION. THIS LISTING SHALL BE SIGNED BY ALL PARTIES PRESENT AT THE TEST. COMMENCEMENT OF WORK BEFORE THE ABOVE SHALL CONSTITUTE ACCEPTANCE OF ALL SYSTEMS BY THE CONTRACTOR IN FULLY OPERATIONAL CONDITION.

5. THE CONTRACTOR SHALL COORDINATE PHASING OF ALL WORK IN ACCORDANCE WITH WORK SEQUENCE AS OUTLINED IN THE PROJECT SPECIFICATIONS AND AS NECESSARY FOR CONTINUOUS OPERATION. THE CONTRACTOR SHALL PROVIDE TEMPORARY POWER AS REQUIRED TO MAINTAIN OPERATIONS OR POWER TEMPORARY EQUIPMENT.

6. THE CONTRACTOR SHALL DEVELOP AND SUBMIT A CONSTRUCTION PHASING PLAN FOR APPROVAL ALONG WITH THE PUMP STATION SUBMITTALS. AT A MINIMUM, THE PHASING PLAN SHALL INCLUDE THE REQUIREMENTS PRESENTED IN THE CONTRACT DOCUMENTS, DESCRIPTIONS OF DEMOLITION WORK, DESCRIPTION OF PROPOSED WORK, AND PROVIDE A DETAILED SCHEDULE PRESENTING THE PLANNED START AND FINISH DATE FOR EACH ACTIVITY.

7. THE CONTRACTOR SHALL COORDINATE NEW CONDUIT AND/OR DUCT RUNS WITH OTHER UTILITIES, FOR FACILITIES AND PIPING RUNS. PROVIDE 6" CLEARANCE AT PIPE CROSSINGS.

8. THE CONTRACTOR SHALL PROVIDE RECORD DRAWINGS OF ALL SYSTEMS INCLUDING ROUTING OF INSTRUMENTATION CIRCUITS AND HOME RUNS.

9. THESE DRAWINGS ARE INTENDED TO SHOW THE GENERAL ARRANGEMENT OF EQUIPMENT ONLY AND MAY NOT INDICATE EVERY OFFSET, BEND, FITTING OR MODIFICATION OF MATERIALS REQUIRED FOR INSTALLATION. THE EXACT EQUIPMENT SIZE, CONFIGURATION, AND ELECTRICAL POINTS OF CONNECTION TO EQUIPMENT VARY BY MANUFACTURER. THE CONTRACTOR SHALL COORDINATE THE FINAL CONFIGURATION OF EQUIPMENT. THE CONTRACTOR SHALL SUBMIT EQUIPMENT COORDINATION DRAWINGS INDICATING THE ACTUAL SIZE AND CONFIGURATION OF PROPOSED EQUIPMENT DRAWN TO SCALE INCLUDING THE MANUFACTURER'S RECOMMENDED MAINTENANCE SERVICE AREAS AND MECHANICAL AND ELECTRICAL INTERFACE REQUIREMENTS INCLUDING ELECTRICAL CONNECTIONS AT THE TIME OF EQUIPMENT SHOP DRAWING SUBMITTAL.

10. ALL OUTDOOR ANALOG SIGNAL CONDUITS SHALL BE PVC COATED RIGID GALVANIZED STEEL ABOVE AND BELOW GRADE. ALL OTHER OUTDOOR CONDUITS SHALL BE PVC COATED RIGID GALVANIZED STEEL ABOVE GRADE AND SCHEDULE 40 PVC BELOW GRADE UNLESS INDICATED OTHERWISE. ALL FITTINGS AND MOUNTING HARDWARE FOR PVC COATED RGS CONDUIT SHALL BE PVC COATED. REFER TO SECTION 26 05 00.00 40 AND SECTION 33 71 02.00 20 FOR ADDITIONAL REQUIREMENTS. INDOOR CONDUITS SHALL BE RIGID GALVANIZED STEEL. TRANSITIONS FROM PVC TO RGS CONDUIT SHALL BE BELOW THE FIRST ELBOW. THE PORTION OF RGS CONDUIT TRANSITIONS THAT ARE BELOW FINISHED FLOOR SHALL BE PVC COATED. PVC CONDUIT SHALL BE SUNLIGHT RESISTANT, RATED FOR 90°C CONDUCTORS. FLEXIBLE CONDUIT, IF REQUIRED, SHALL BE CARLON "CARFLEX" OR EQUAL.

11. SPLICES IN PULLBOXES AND HANDHOLES SHALL BE PERMISSIBLE ONLY WHERE INDICATED IN THE CONTRACT DRAWINGS, OR AS APPROVED BY THE CO. SPLICES SHALL BE WATERPROOF, LISTED FOR THE APPLICATION, AND INSTALLED IN ACCORDANCE WITH SPLICE AND CABLE OR WIRING MANUFACTURER'S RECOMMENDATIONS.

12. ALL MOUNTING HARDWARE, ANCHORS, CHANNEL, PLATES, BRACKETS, FLOAT SUSPENSION CABLES, CABLE HANGERS AND ENCLOSURES SHALL BE STAINLESS STEEL UNLESS OTHERWISE INDICATED.

13. CONDUCTORS WITHIN CONTROL PANEL SHALL BE TYPE MTW. VFD WIRING SHALL BE TYPE XHHW-2 OR LISTED VFD CABLE. ALL OTHER CONDUCTORS SHALL BE ANNEALED SOFT DRAWN COPPER WITH TYPE THWN/THHN INSULATION RATED FOR 600 VOLTS.

14. INSTRUMENTATION CIRCUITS IN CONDUITS SHALL BE SEPARATED BY 6" MINIMUM WHERE RUNNING IN PARALLEL WITH POWER CIRCUIT CONDUITS.

15. ALL CONDUITS SHALL HAVE A SEPARATE GREEN GROUND CONDUCTOR INSTALLED FOR GROUNDING.

16. ALL DISCONNECT SWITCHES SHALL BE HEAVY DUTY TYPE.

17. ALL ELECTRICAL EQUIPMENT ENCLOSURES LOCATED OUTSIDE SHALL BE NEMA 4X-SS UNLESS OTHERWISE INDICATED.

18. ALL EMPTY CONDUITS SHALL CONTAIN 200 LB PULL-LINE. ALL SPARE CONDUITS SHALL BE CAPPED ON EACH END AND LABELED TO IDENTIFY SOURCE OF EACH END.

19. ALL CONDUCTORS AND CABLES USED IN OUTDOOR OR UNDERGROUND LOCATIONS SHALL BE SUITABLE FOR USE IN WET LOCATIONS.

20. COORDINATE THE ROUTING OF INDOOR CONDUITS WITH THE CO.

21. COORDINATE THE TEMPORARY SHUTDOWN OF POWER AS WELL AS THE DECOMMISSIONING OF POWER AND COMMUNICATION CONDUCTORS WITH THE CO.

22. CONTRACTOR SHALL CORE DRILL BUILDING WALLS FOR CONDUIT PENETRATION. SEAL AROUND CONDUITS WITH 30 YEAR ACRYLIC CAULK AND PAINT AROUND CONDUIT TO MATCH BUILDING EXTERIOR.

ABBREVIATIONS

A	AMPERE, AUTOMATIC
AC	ALTERNATING CURRENT
AFF	ABOVE FINISHED FLOOR
AFG	ABOVE FINISHED GRADE
AMP	AMPERE
ATS	AUTOMATIC TRANSFER SWITCH
AUTO	AUTOMATIC AUX AUXILIARY
AWG	AMERICAN WIRE GAGE
BC	BARE COPPER
BKR	BREAKER
BLDG	BUILDING
C	CONDUIT, CONTACTOR, CONDUCTOR, CLOSE
CB	CIRCUIT BREAKER
CFWE	CABLE FURNISHED WITH EQUIPMENT
CKT	CIRCUIT
CO	CONTRACTING OFFICER
CPT	CONTROL POWER TRANSFORMER
CRE	CORROSION RESISTANT
CT	CURRENT TRANSFORMER, CABLE TRAY
DC	DIRECT CURRENT
DIV	DIVISION
DS	DISCONNECT SWITCH
EP	EXPLOSION-PROOF
EPR	ETHYLENE PROPYLENE RUBBER
FDR	FEEDER
F,FU	FUSE
FLEX	FLEXIBLE CONDUIT
FO	FIBER OPTIC
FOT	FIBER OPTIC TERMINAL
FREQ	FREQUENCY
FVNR	FULL VOLTAGE NON-REVERSING
FVR	FULL VOLTAGE REVERSING
G	GROUND
GALV	GALVANIZED
GEN	GENERATOR
GFE	GOVERNMENT FURNISHED EQUIPMENT
GFCI	GROUND FAULT CIRCUIT INTERRUPTER
GND	GROUND
HP	HORSEPOWER
HPS	HIGH PRESSURE SODIUM
HOA	HAND OFF AUTOMATIC
HW	HARDWIRED
IC	INTERRUPTING CAPACITY
IEEE	INSTITUTE OF ELECTRICAL AND ELECTRONIC ENGINEERS
I&C	INSTRUMENTATION AND CONTROL
J,JB	JUNCTION BOX
K	KEY INTERLOCK
KA	KILOAMPERES
KCCS	KENNEDY COMPLEX CONTROL SYSTEM
KCMIL	THOUSAND CIRCULAR MILS
KV	KILOVOLT
KVA	KILOVOLT AMPERES
KW	KILOWATTS
KWH	KILOWATT HOUR
L	LIGHTING CONTACTOR, LOW SPEED, LOWER
LB	POUND
LT	LIQUID-TIGHT
FLEX	FLEX CONDUIT
M	MAGNETIC CONTACTOR COIL, MOTOR, MANUAL
MCC	MOTOR CONTROL CENTER
MH	MANHOLE, METAL HALIDE, MOUNTING HEIGHT
MO	MOTOR OPERATOR
MS	MOTOR STARTER
MSC	MISCELLANEOUS
MT,MTD	MOUNT, MOUNTED
MV	MEDIUM VOLTAGE
N	NEUTRAL, NORMAL
NA	NON-AUTOMATIC
NC	NORMALLY CLOSED
NEC	NATIONAL ELECTRICAL CODE
NEMA	NATIONAL ELECTRICAL MANUFACTURERS ASSOCIATION
NEUT	NEUTRAL
NO	NORMALLY OPEN
NTS	NOT TO SCALE
O-O	ON-OFF
OOR	ON OFF REMOTE
PB	PULL BOX
PF	POWER FACTOR
PH	PHASE
PNL	PANEL
PT	POTENTIAL TRANSFORMER
PVC	POLYVINYL CHLORIDE CONDUIT
PWR	POWER
RCPT	RECEPTACLE
RF	RADIO FREQUENCY
RGS	RIGID GALVANIZED STEEL
RMS	ROOT MEAN SQUARE
RTU	REMOTE TERMINAL UNIT
RVAT	REDUCED VOLTAGE AUTOTRANSFORMER
RVNR	REDUCED VOLTAGE NON REVERSING
RVR	REDUCED VOLTAGE REVERSING
SA	SURGE ARRESTER
SDBC	SOFT DRAWN BARE COPPER
SPD	SURGE PROTECTIVE DEVICE
SS	STAINLESS STEEL
SSRV	SOLID STATE REDUCED VOLTAGE
ST	SHUNT TRIP
SV	SOLENOID VALVE
SW	SWITCH
TEL	TELEPHONE
TEMP	TEMPERATURE
TJB	TERMINAL JUNCTION BOX
TSP	TWISTED SHIELDED PAIR
UNO	UNLESS NOTED OTHERWISE
UPS	UNINTERRUPTIBLE POWER SUPPLY
V	VOLTAGE, VOLTS
VFD	VARIABLE FREQUENCY DRIVE
V-B	VFD BYPASS
W	WATT
WP	WEATHERPROOF
WWF	WELDED WIRE FABRIC
W/	WITH
XFMR	TRANSFORMER
ϕ	PHASE

THESE ARE STANDARD ABBREVIATION SHEETS. SOME ABBREVIATIONS MAY APPEAR ON THE ABBREVIATION LIST AND NOT ON THE DRAWINGS.

THIS SPACE RESERVED

SYM	ZONE	DESCRIPTION	DATE	APPROVED
A		ADDED SHEET - INITIAL RELEASE TO EDC	12/05/11	KAM

REVISIONS

THIS DRAWING CREATED IN AUTOCAD 2010 FILE FORMAT AND WILL BE REVISED ONLY ON AN AUTOCAD SYSTEM. FILE: 14000189-DP5-E02.DWG

JONES EDMUNDS
730 NE WALDO ROAD, GAINESVILLE, FLORIDA 32641 / (352) 377-5821
3910 S WASHINGTON AVE, SUITE 210, TITUSVILLE, FLORIDA 32780 / (321) 269-2950

SIGNATURES	DATE
DRAWN L. MILLER	12/05/11
CHECKED M. KOROS	12/05/11
SUBMITTED M. CLARK	12/05/11
ST of LICENSURE: FL LICENSE NO: 48898	
APPROVED M. CLARK	12/5/11
D. TRANG	12/5/11

NATIONAL AERONAUTICS AND SPACE ADMINISTRATION
JOHN F. KENNEDY SPACE CENTER, NASA
KENNEDY SPACE CENTER, FLORIDA

REVITALIZE WATER & WASTEWATER SYSTEMS - VOLUME 5 OF 5
W1 PUMP STATION REPLACEMENT

ABBREVIATIONS AND GENERAL NOTES

FILE NO.	SIZE	DWG. NO.	REV
	F	79K38877 VOL 5	A

PROJ. NO. 96968.3 SHEET 41

E2

NOTICE: When Government drawings, specifications, or other data are used for any purpose other than in connection with a definitely related Government procurement operation, the United States Government thereby incurs no responsibility nor obligation whatsoever; and the fact that the Government may have formulated, furnished, or in any way supplied the said drawings, specifications or other data is not to be regarded by implication or otherwise as in any manner licensing the holder or any other person or corporation, or conveying any rights or permission to manufacture, use, or sell any patented invention that may in any way be related thereto.

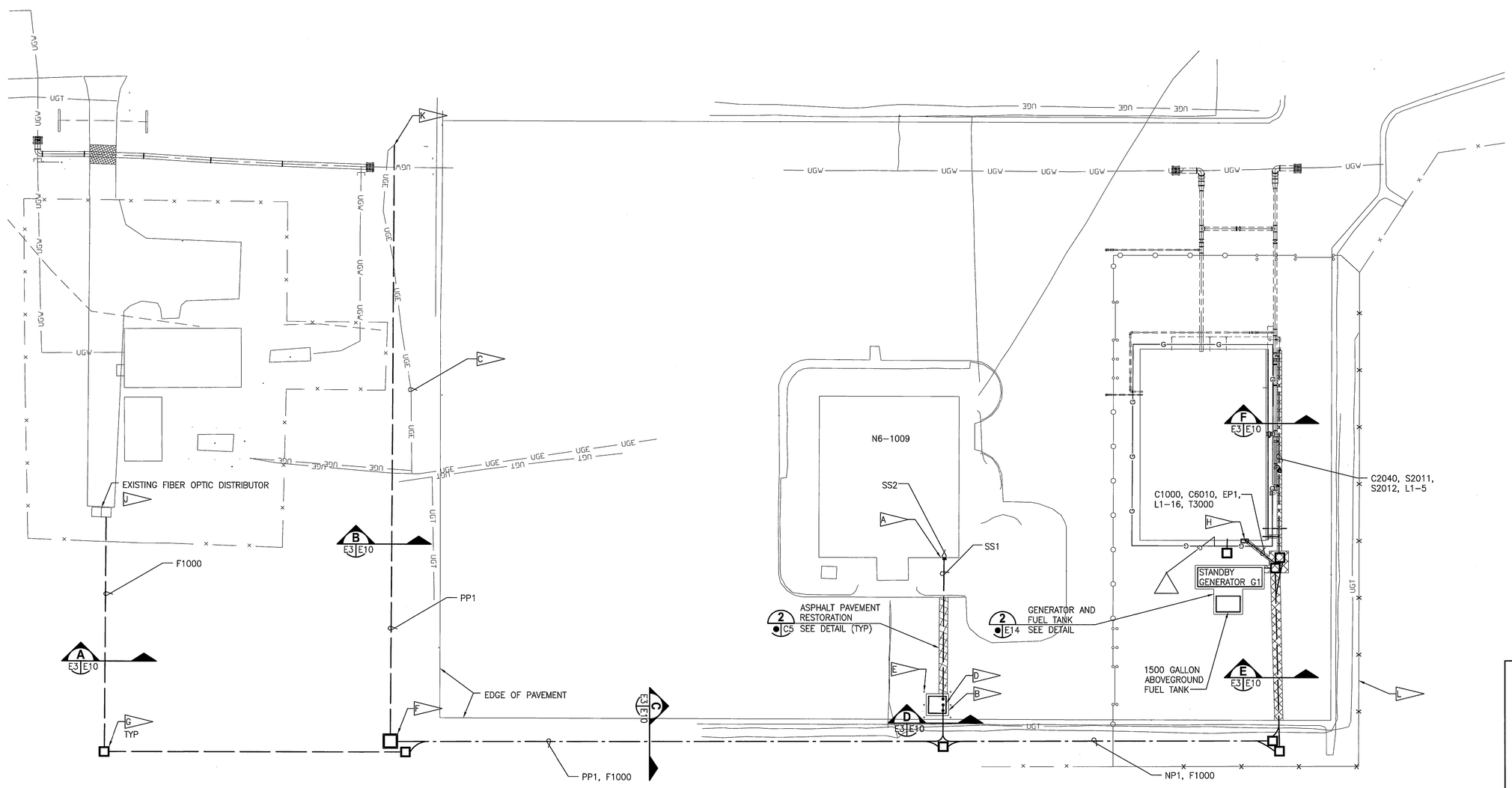

NOTES:

A. NEMA 4X SAFETY SWITCH. SEE DETAIL 1/E14 SIMILAR. MOUNT PROPOSED SAFETY SWITCH TO WALL OF EXISTING N6-1009 BUILDING USING STAINLESS STEEL HARDWARE AND UNISTRUT AS REQUIRED.

B. 6" THICK CONCRETE SLAB. SEE DETAIL 5/S4 FOR SLAB INSTALLATION.

C. REMOVE EXISTING RISER CIRCUIT TO THE EXISTING TRANSFORMER USS 139 ON SOUTH SIDE OF EXISTING W-1 PUMP STATION. ALSO, REMOVE FEEDER FROM EXISTING TRANSFORMER TO BUILDING N6-1009 TO BE RE-SERVICED FROM SS2. REMOVE ALL CONDUIT UNDER UNPAVED AREAS. CONDUIT UNDER ASPHALT SHALL BE ABANDONED IN-PLACE. FOR CONDUITS WITH CONCRETE PENETRATION, CUT CONDUITS BELOW FINISHED CONCRETE LEVEL AND PATCH CONCRETE.

D. 500KVA TRANSFORMER.

E. BOLLARD (TYP). INSTALL BOLLARDS SUCH THAT TRANSFORMER DOOR HAS CLEARANCE TO OPEN 120°. SEE DETAIL 3/C5

F. 4' X 4' TIER 15 RATED QUAZITE PULL BOX OR APPROVED EQUAL. SEE DETAIL 1/E11

G. TIER 15 RATED QUAZITE PULL BOX OR APPROVED EQUAL UNLESS OTHERWISE INDICATED (TYP). SEE DETAIL 1/E11

H. AUTOMATIC TRANSFER SWITCH.

J. MULTIMODE FIBER OPTIC CONDUITS AND CABLES TO BE TERMINATED FOR TESTING, BUT NOT LANDED AT KCCS CONNECTION. PROVIDE 50' SPARE FIBER OPTIC CABLE COILED UP INSIDE OF EXISTING FIBER OPTIC DISTRIBUTOR. PROVIDE CLEAR LABELING OF ALL CABLES IDENTIFYING SOURCE TO ALLOW PROPER TERMINATING BY OTHERS.

K. EXISTING FLORIDA POWER AND LIGHT 13.2KV POWER POLE. SEE ELECTRICAL SERVICE DROP DETAIL 2/E3 E13

L. GROUND PROPOSED FENCE ACCORDING TO KSC-STD-E-0012E, AND CONNECT TO BUILDING GROUNDING SYSTEM.

W-1 PUMP STATION SITE ELECTRICAL PLAN

1"=20'

GRAPHIC SCALE
0 10 20 40
SCALE IN FEET
1"=20'

THIS SPACE RESERVED

SYM	ZONE	DESCRIPTION	DATE	APPROVED
A		ADDED SHEET - INITIAL RELEASE TO EDC	12/05/11	KAN

REVISIONS

THIS DRAWING CREATED IN AUTOCAD 2010 FILE FORMAT AND WILL BE REVISED ONLY ON AN AUTOCAD SYSTEM. FILE: 14000189-DP5-E03.DWG

JONES EDMUNDS
730 NE WALDO ROAD, GAINESVILLE, FLORIDA 32641 / (352) 377-5821
3910 S WASHINGTON AVE, SUITE 210, TITUSVILLE, FLORIDA 32780 / (321) 269-2950

SIGNATURES	DATE
DRAWN L. MILLER	12/05/11
CHECKED M. KOROS	12/05/11
SUBMITTED M. CLARK	12/05/11
ST of LICENSURE: FL LICENSE NO: 48898	
APPROVED M. CLARK	12/5/11
D. TRANG	12/5/11

NATIONAL AERONAUTICS AND SPACE ADMINISTRATION
JOHN F. KENNEDY SPACE CENTER, NASA
KENNEDY SPACE CENTER, FLORIDA

REVITALIZE WATER & WASTEWATER SYSTEMS - VOLUME 5 OF 5
W1 PUMP STATION REPLACEMENT

W-1 PUMP STATION ELECTRICAL PLAN

FILE NO.	SIZE	DWG. NO.	REV
	F	79K38877 VOL 5	A
PROJ. NO. 96968.3		SHEET 42	

E3

NOTICE: When Government drawings, specifications, or other data are used for any purpose other than in connection with a definitely related Government procurement operation, the United States Government thereby incurs no responsibility nor obligation whatsoever; and the fact that the Government may have formulated, furnished, or in any way supplied the said drawings, specifications or other data is not to be regarded by implication or otherwise as in any manner licensing the holder or any other person or corporation, or conveying any rights or permission to manufacture, use, or sell any patented invention that may in any way be related thereto.

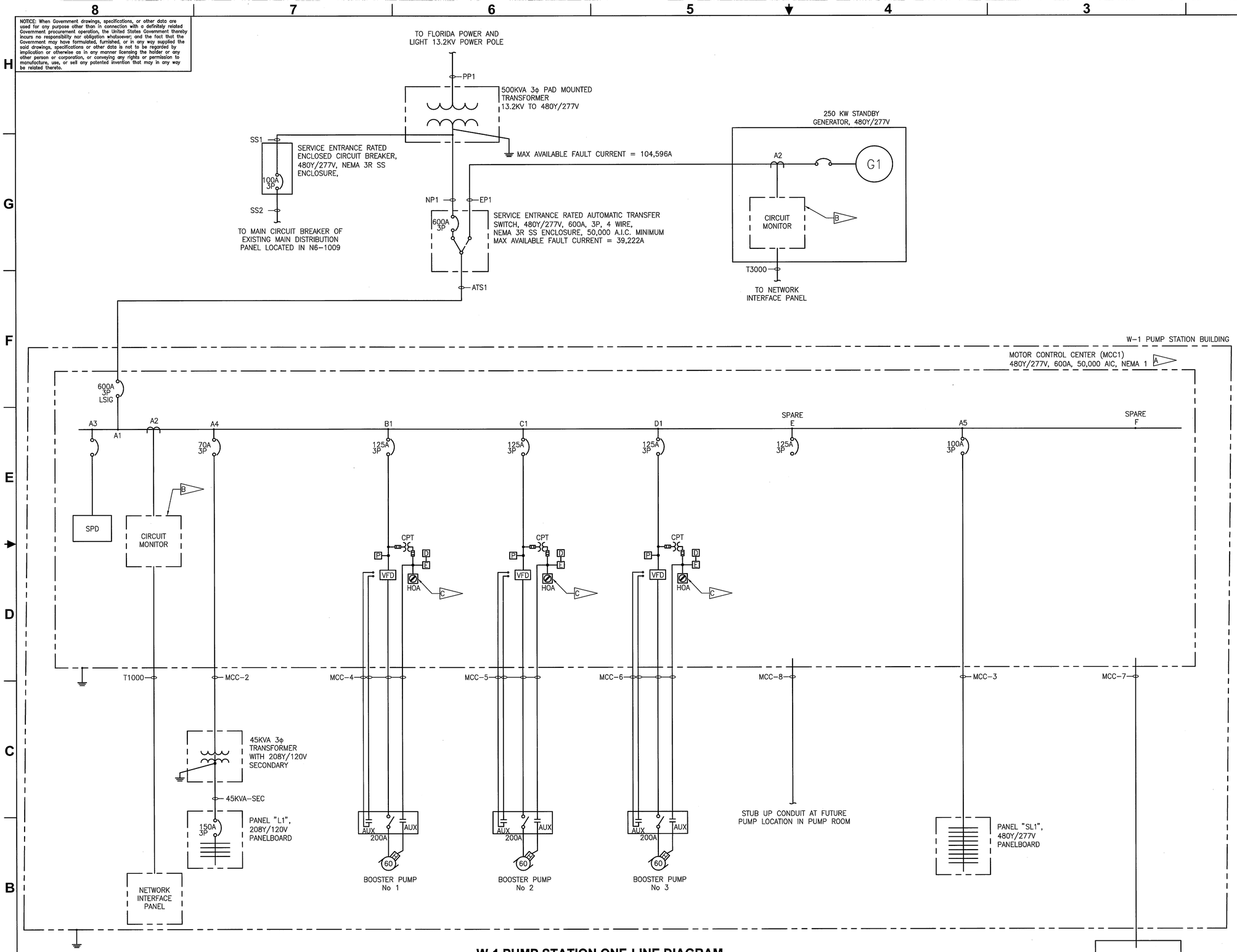

W-1 PUMP STATION ONE-LINE DIAGRAM

NOTES:

A. REFER TO DRAWING E8 AND E9 FOR MCC AND PANEL SCHEDULES.

B. PROVIDE SQUARE D POWER LOGIC SERIES CM 3250 CIRCUIT MONITOR WITH ECC21 ETHERNET COMMUNICATION CARD (NO SUBSTITUTIONS). SEE DETAIL 4/E11

C. PROVIDE OUTPUT CONTACTS TO PLC AS INDICATED ON I5.

THIS SPACE RESERVED

SYM	ZONE	DESCRIPTION	DATE	APPROVED
A		ADDED SHEET- INITIAL RELEASE TO EDC	12/05/11	KM

REVISIONS

THIS DRAWING CREATED IN AUTOCAD 2010 FILE FORMAT AND WILL BE REVISED ONLY ON AN AUTOCAD SYSTEM. FILE: 14000189-DP5-E04.DWG

JONES EDMUNDS
730 NE WALDO ROAD, GAINESVILLE, FLORIDA 32641 / (352) 377-5821
3910 S WASHINGTON AVE, SUITE 210, TITUSVILLE, FLORIDA 32780 / (321) 269-2950

SIGNATURES	DATE
DRAWN L. MILLER	12/05/11
CHECKED M. KOROS	12/05/11
SUBMITTED M. CLARK	12/05/11
ST of LICENSURE: FL LICENSE NO: 48898	
APPROVED M. CLARK	12/5/11
D. TRANG	12/5/11

NATIONAL AERONAUTICS AND SPACE ADMINISTRATION
JOHN F. KENNEDY SPACE CENTER, NASA
KENNEDY SPACE CENTER, FLORIDA

REVITALIZE WATER & WASTEWATER SYSTEMS - VOLUME 5 OF 5
W1 PUMP STATION REPLACEMENT
ONE-LINE DIAGRAM

FILE NO.	SIZE	DWG. NO.	REV
	F	79K38877 VOL 5	A

PROJ. NO. 96968.3 | SHEET 43

E4

NOTICE: When Government drawings, specifications, or other data are used for any purpose other than in connection with a definitely related Government procurement operation, the United States Government thereby incurs no responsibility nor obligation whatsoever; and the fact that the Government may have formulated, furnished, or in any way supplied the said drawings, specifications or other data is not to be regarded by implication or otherwise as in any manner licensing the holder or any other person or corporation, or conveying any rights or permission to manufacture, use, or sell any patented invention that may in any way be related thereto.

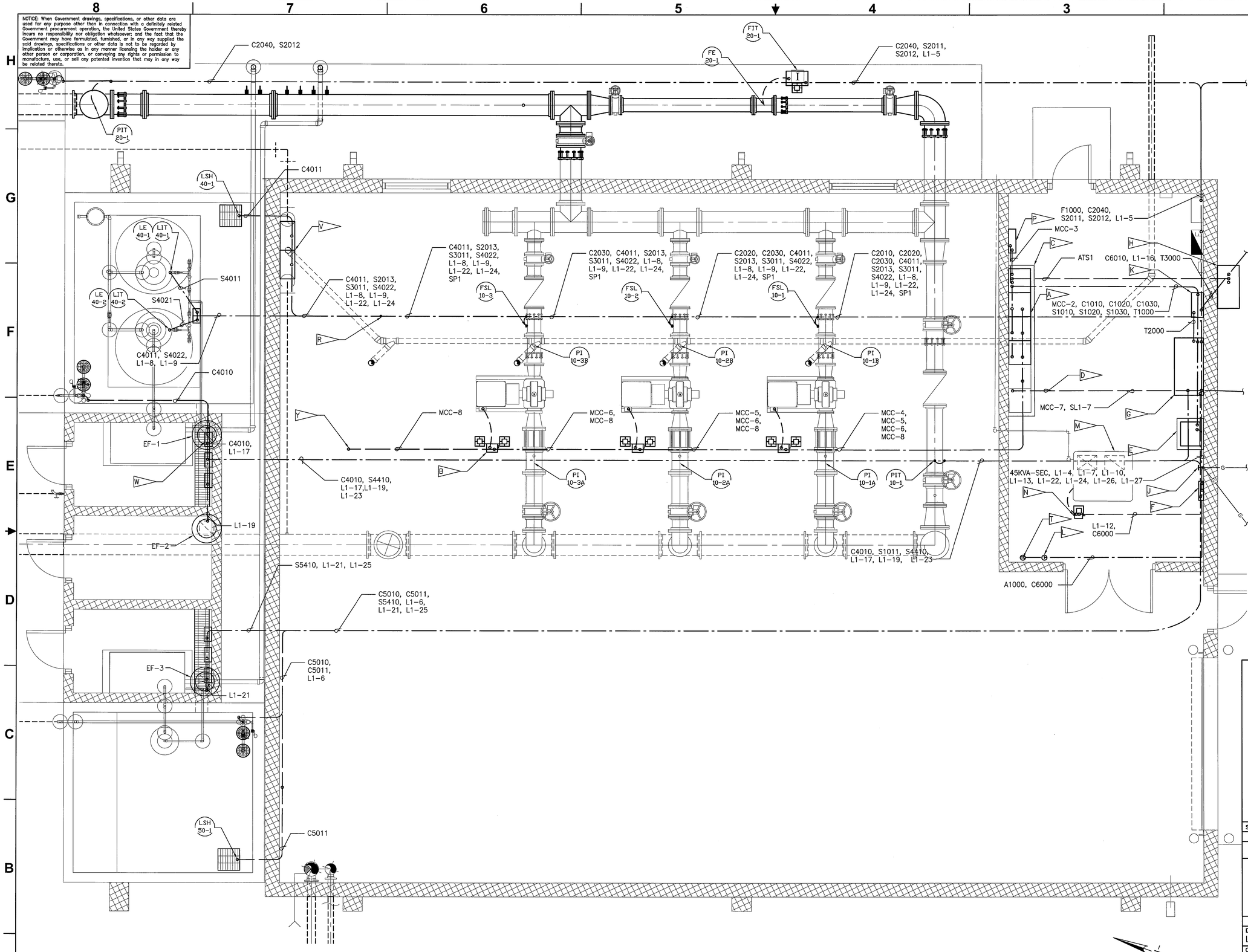

NOTES:

- A — MOTOR CONTROL CENTER. SEE DETAIL 1/E5 E10
- B — HEAVY DUTY SAFETY SWITCH (TYP). SEE DETAIL 1/E14
- C — PROVIDE 3" THICK CONCRETE HOUSEKEEPING PAD EXTENDING 3" FROM THE FRONT AND SIDE EDGES OF THE MCC. SEE DETAIL 5/S4
- D — PROVIDE 1-2"C STUBOUT FROM FUTURE MCC SECTION TO OUTSIDE OF BUILDING. TERMINATE CONDUIT IN 2'x3' PULLBOX AS INDICATED. TRANSITION TO PVC COATED RGS CONDUIT BELOW FINISHED FLOOR AND PROVIDE COUPLING WITH SCREW IN CAP FLUSH WITH FINISHED FLOOR.
- E — 45 KVA DRY TYPE TRANSFORMER WITH 208Y/120V SECONDARY ON 3" HOUSEKEEPING PAD.
- F — 208Y/120V PANELBOARD L1.
- G — PUMP STATION CONTROL PANEL. SEE DETAIL 1/I6
- H — AUTOMATIC TRANSFER SWITCH.
- J — GROUND BAR. SEE DETAIL 2/E10
- K — NETWORK INTERFACE PANEL. SEE DETAIL 2/I6
- L — THERMOSTAT.
- M — HVAC UNIT RTU-1 MOUNTED ON ELECTRICAL ROOM CEILING DECK.
- N — HVAC HEAVY DUTY SAFETY SWITCH. SEE DETAIL 1/E14
- P — 480Y/277V PANEL SL1.
- R — PROVIDE 1-3/4"C WHICH STUBS INTO A 4'x4' STAINLESS STEEL JUNCTION BOX THAT IS FLUSH MOUNTED W/ THE CONCRETE FLOOR OF THE PUMP ROOM FROM PUMP STATION CONTROL PANEL TO FUTURE PUMP AREA LOCATED IN PUMP ROOM.
- T — TEMPERATURE SENSOR.
- V — ANALYZER PANEL. SEE DETAIL 1/I7
- W — JUNCTION BOX (TYP).
- Y — PROVIDE 1-2"C WHICH STUBS INTO A 4'x4' STAINLESS STEEL JUNCTION BOX THAT IS FLUSH MOUNTED W/ THE CONCRETE FLOOR OF THE PUMP ROOM FROM FUTURE MCC SECTION TO FUTURE PUMP AREA LOCATED IN PUMP ROOM.

W-1 PUMP STATION BUILDING POWER AND PROCESS ELECTRICAL PLAN

3/8"=1'-0"

GRAPHIC SCALE
0 1 2 4
SCALE IN FEET
3/8"=1'-0"

E5

THIS SPACE RESERVED

SYM	ZONE	DESCRIPTION	DATE	APPROVED
A		ADDED SHEET - INITIAL RELEASE TO ER	12/05/11	

REVISIONS

THIS DRAWING CREATED IN AUTOCAD 2010 FILE FORMAT AND WILL BE REVISED ONLY ON AN AUTOCAD SYSTEM. FILE: 14000189-DP5-E05.DWG

JONES EDMUNDS
730 NE WALDO ROAD, GAINESVILLE, FLORIDA 32641 / (352) 377-5821
3910 S WASHINGTON AVE, SUITE 210, TITUSVILLE, FLORIDA 32780 / (321) 269-2950

SIGNATURES	DATE
DRAWN L. MILLER	12/05/11
CHECKED M. KOROS	12/05/11
SUBMITTED M. CLARK	12/05/11
ST of LICENSURE: FL LICENSE NO: 48898	
APPROVED M. CLARK	12/5/11
D. TRANG	12/5/11

NATIONAL AERONAUTICS AND SPACE ADMINISTRATION
JOHN F. KENNEDY SPACE CENTER, NASA
KENNEDY SPACE CENTER, FLORIDA

REVITALIZE WATER & WASTEWATER SYSTEMS - VOLUME 5 OF 5
W1 PUMP STATION REPLACEMENT

W-1 PUMP STATION BUILDING POWER AND PROCESS ELECTRICAL PLAN

FILE NO.	SIZE	DWG. NO.	REV
	F	79K38877 VOL 5	A

PROJ. NO. 96968.3 | SHEET 44

NOTICE: When Government drawings, specifications, or other data are used for any purpose other than in connection with a definitely related Government procurement operation, the United States Government thereby incurs no responsibility nor obligation whatsoever; and the fact that the Government may have formulated, furnished, or in any way supplied the said drawings, specifications or other data is not to be regarded by implication or otherwise as in any manner licensing the holder or any other person or corporation, or conveying any rights or permission to manufacture, use, or sell any patented invention that may in any way be related thereto.

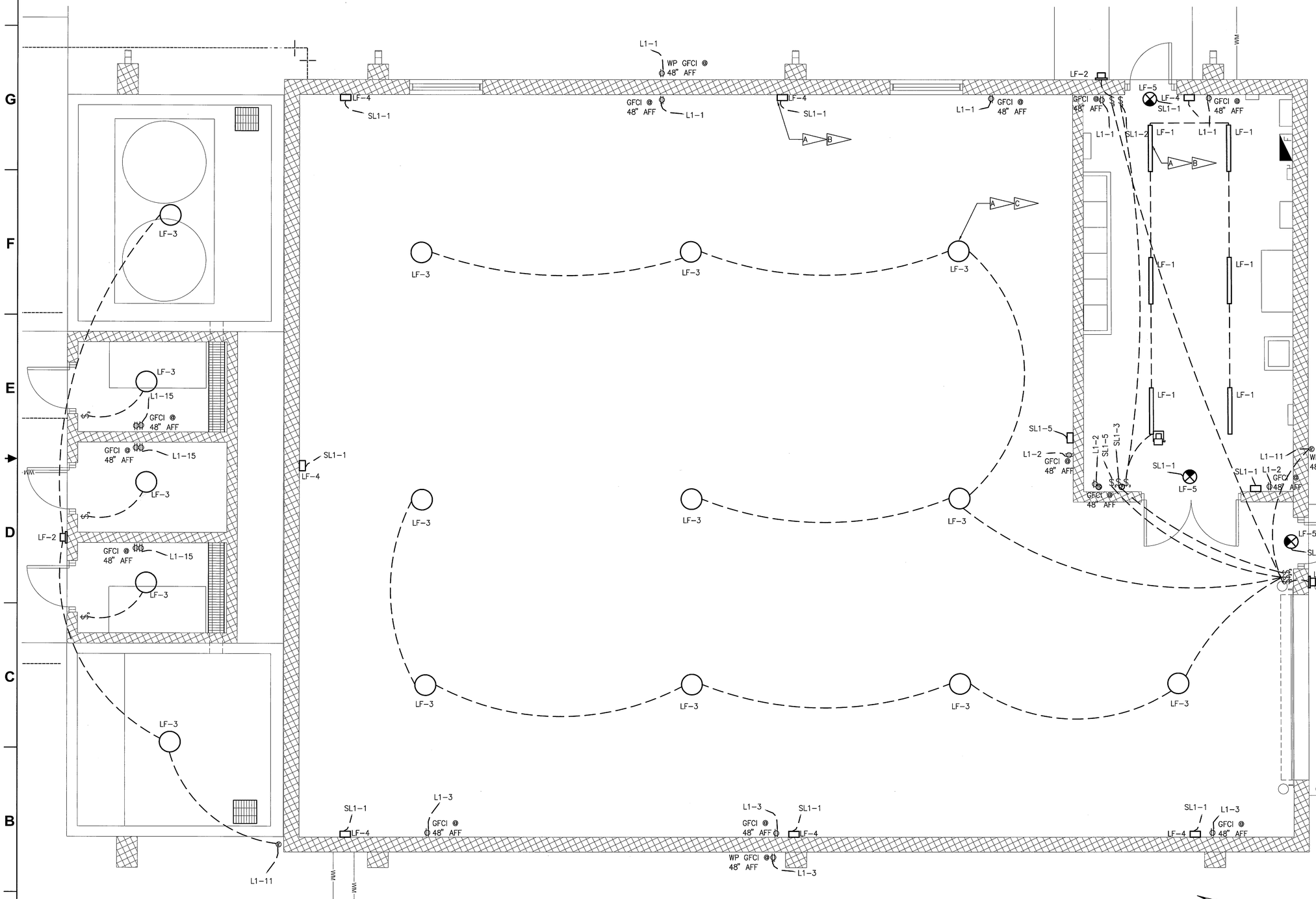

W-1 PUMP STATION BUILDING POWER AND PROCESS ELECTRICAL PLAN

3/8"=1'-0"

GRAPHIC SCALE

0 1 2 4

SCALE IN FEET 3/8"=1'-0"

NOTES:

A. SEE E8 FOR LIGHTING FIXTURE SCHEDULE.

B. SEE E13 AND E14 FOR LIGHTING FIXTURE DETAILS (TYP).

C. MOUNT ALL WALL AND CEILING FIXTURES WITH TWO OR MORE 3/4"X1" TAPCON SCREWS (OR APPROVED EQUAL) WITH 3/4" FENDER WASHERS (TYP).

D. FIXTURE LOCATIONS ARE APPROXIMATE. SUSPEND FIXTURES FROM AVAILABLE STRUCTURAL STEEL (TYP).

THIS SPACE RESERVED

SYM	ZONE	DESCRIPTION	DATE	APPROVED
A		ADDED SHEET - INITIAL RELEASE TO EDL	12/05/11	

REVISIONS

THIS DRAWING CREATED IN AUTOCAD 2010 FILE FORMAT AND WILL BE REVISED ONLY ON AN AUTOCAD SYSTEM. FILE: 14000189-DP5-E06.DWG

JONES EDMUNDS
730 NE WALDO ROAD, GAINESVILLE, FLORIDA 32641 / (352) 377-5821
3910 S WASHINGTON AVE, SUITE 210, TITUSVILLE, FLORIDA 32780 / (321) 269-2950

SIGNATURES	DATE
DRAWN L. MILLER	12/05/11
CHECKED M. KOROS	12/05/11
SUBMITTED M. CLARK	12/05/11
ST of LICENSURE: FL LICENSE NO: 48898	
APPROVED M. CLARK	12/5/11
D. TRANG	12/5/11

NATIONAL AERONAUTICS AND SPACE ADMINISTRATION
JOHN F. KENNEDY SPACE CENTER, NASA
KENNEDY SPACE CENTER, FLORIDA

REVITALIZE WATER & WASTEWATER SYSTEMS - VOLUME 5 OF 5
W1 PUMP STATION REPLACEMENT

W-1 PUMP STATION BUILDING LIGHTING AND RECEPTACLE PLAN

FILE NO.	SIZE	DWG. NO.	REV
	F	79K38877 VOL 5	A

PROJ. NO. 96968.3 SHEET 45

E6

NOTICE: When Government drawings, specifications, or other data are used for any purpose other than in connection with a definitely related Government procurement operation, the United States Government thereby incurs no responsibility nor obligation whatsoever; and the fact that the Government may have formulated, furnished, or in any way supplied the said drawings, specifications or other data is not to be regarded by implication or otherwise as in any manner licensing the holder or any other person or corporation, or conveying any rights or permission to manufacture, use, or sell any patented invention that may in any way be related thereto.

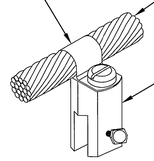

SEAM CLIP DETAIL

NTS

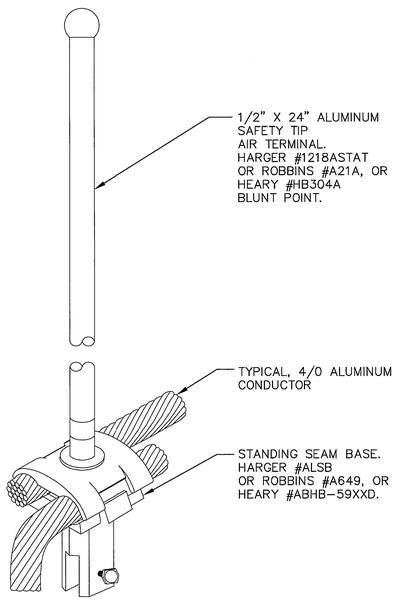

AIR TERMINAL AND BASE DETAIL (1 / E7 | E7)

NTS

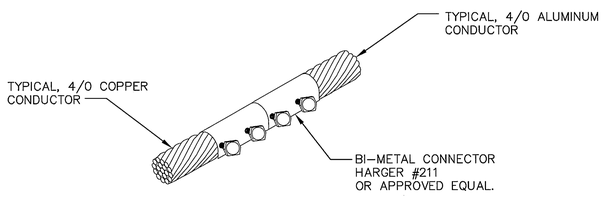

BI-METAL CONNECTOR DETAIL (2 / E7 | E7)

NTS

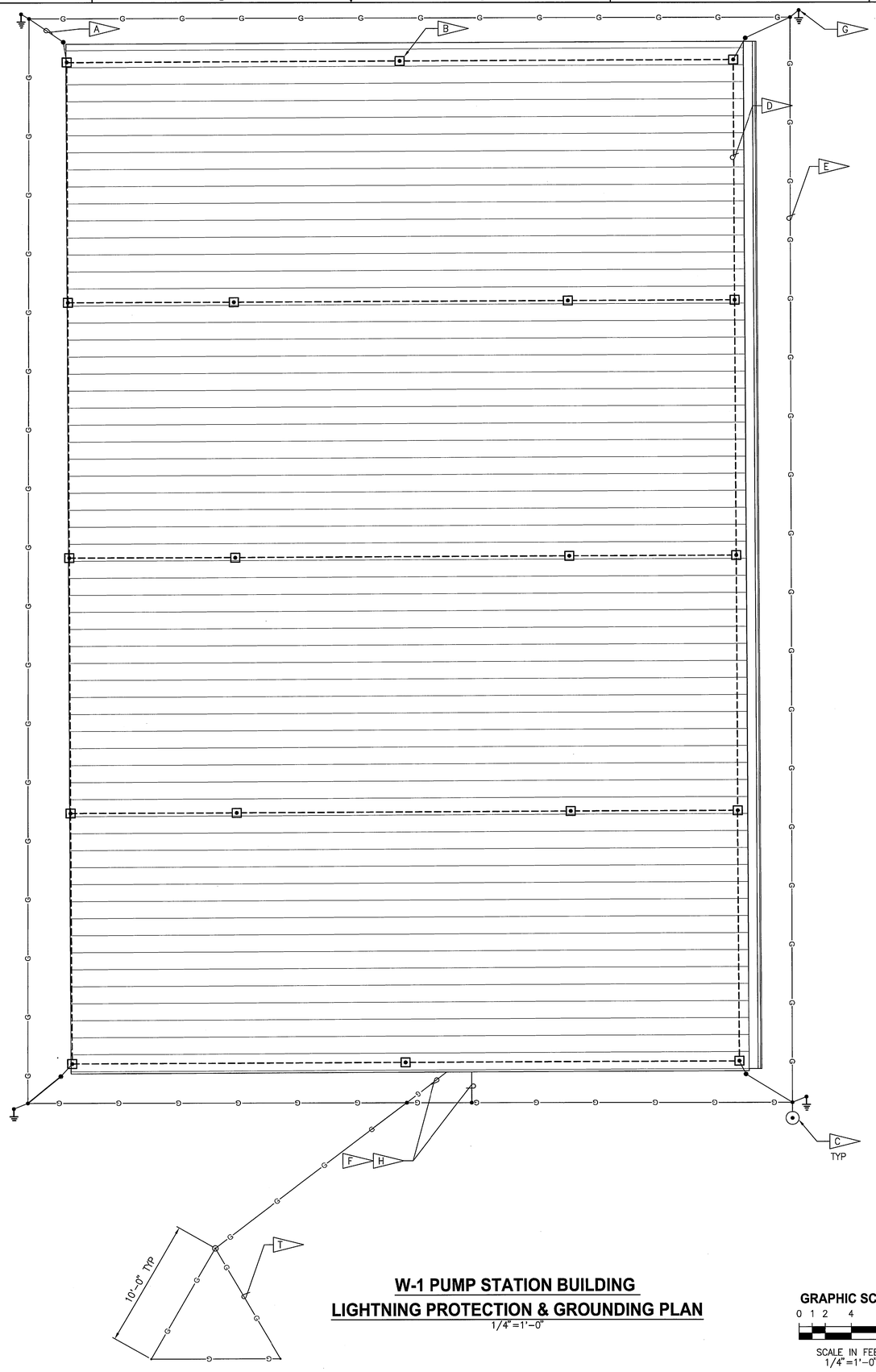

W-1 PUMP STATION BUILDING
LIGHTNING PROTECTION & GROUNDING PLAN

1/4" = 1'-0"

GRAPHIC SCALE
0 1 2 4 8
SCALE IN FEET
1/4" = 1'-0"

NOTES:

A. TYPICAL DOWN CONDUCTOR ON EXTERIOR OF BUILDING. RUN IN 1" PVC CONDUIT ADJACENT TO RAIN GUTTER DOWNSPOUTS. PROVIDE CABLE GUARD FROM ROOF TO GROUND. PROVIDE BI-METAL CONNECTOR TO CHANGE FROM ALUMINUM TO COPPER. SEE DETAIL (2 / E7 | E7)

B. TYPICAL ROOF AIR TERMINAL. SEE DETAIL (1 / E7 | E7)

C. TYPICAL TEST WELL. SEE DETAIL (2 / E11)

D. TYPICAL 4/0 MAIN ROOF CONDUCTOR.

E. COPPER 4/0 AWG COUNTERPOISE CABLE BURIED AT A MMINIMUM OF 18" BELOW FINISHED GRADE.

F. BOND LIGHTNING PROTECTION SYSTEM TO MOTOR CONTROL CENTER, ALL PROCESS PIPING GOING INTO AND OUT OF THE BUILDING, ALL STRUCTURAL STEEL, ALL CONCRETE REINFORCING STEEL, AND GROUNDING TRIANGLE.

G. 3/4" X 20' COPPER GROUND ROD (TYP).

H. TO GROUND BAR. SEE DETAIL (2 / E10)

J. ALL LIGHTNING PROTECTION BASES AND CABLE FASTENERS SHALL BE SECURED WITH STANDING SEAM CLIP. CONTRACTOR MUST VERIFY COMPATIBILITY WITH ROOFING MANUFACTURER.

K. ALL PERIMETER AIR TERMINALS SHALL NOT BE GREATER THAN 20' APART. ALL AIR TERMINALS WITHIN THE PERIMETER SHALL NOT BE GREATER THAN 50' APART.

L. ALL DOWN CONDUCTORS SHALL BE #4/0 BARE STRANDED ANNEALED COPPER.

M. ALL CONDUCTORS SHALL BE ROUTED AS DISCRETELY AS POSSIBLE.

N. SYSTEM TO BE INSTALLED AS CLASS I SYSTEM AS PER NFPA 780.

P. ANY MATERIAL THAT COMES IN CONTACT WITH THE ROOF (DEVICES, ADHESIVES, ETC.) SHALL BE APPROVED BY THE ROOFING MANUFACTURER TO MAINTAIN ROOFING INTEGRITY AND WARRANTY. LIGHTNING PROTECTION SUBCONTRACTOR TO PROVIDE DOCUMENTATION OF ROOFING MANUFACTURER'S ACCEPTANCE OF REQUIRED DEVICES.

R. SEE SECTION 26 41 00.00 40 FOR ADDITIONAL REQUIREMENTS.

T. #4/0 SDBC GROUND CABLE GROUNDING TRIANGLE.

U. GROUND PROPOSED FENCE ACCORDING TO KSC-STD-E-0012E, AND CONNECT TO BUILDING GROUNDING SYSTEM.

THIS SPACE RESERVED

SYM	ZONE	DESCRIPTION	DATE	APPROVED
A		ADDED SHEET - INITIAL RELEASE TO EDL	12/05/11	

REVISIONS

THIS DRAWING CREATED IN AUTOCAD 2010 FILE FORMAT AND WILL BE REVISED ONLY ON AN AUTOCAD SYSTEM. FILE: 14000189-DP5-E07.DWG

JONES EDMUNDS
730 NE WALDO ROAD, GAINESVILLE, FLORIDA 32641 / (352) 377-5821
3910 S WASHINGTON AVE, SUITE 210, TITUSVILLE, FLORIDA 32780 / (321) 269-2950

SIGNATURES	DATE
DRAWN L. MILLER	12/05/11
CHECKED M. KOROS	12/05/11
SUBMITTED M. CLARK	12/05/11
ST of LICENSURE: FL LICENSE NO: 48898	
APPROVED M. CLARK	12/15/11
D. TRANG	12/15/11

NATIONAL AERONAUTICS AND SPACE ADMINISTRATION
JOHN F. KENNEDY SPACE CENTER, NASA
KENNEDY SPACE CENTER, FLORIDA

REVITALIZE WATER & WASTEWATER SYSTEMS - VOLUME 5 OF 5
W1 PUMP STATION REPLACEMENT

W-1 PUMP STATION LIGHTNING PROTECTION & GROUNDING PLAN

FILE NO.	SIZE	DWG. NO.	REV
	F	79K38877 VOL 5	A

PROJ. NO. 96968.3 | SHEET 46

E7

NOTICE: When Government drawings, specifications, or other data are used for any purpose other than in connection with a definitely related Government procurement operation, the United States Government thereby incurs no responsibility nor obligation whatsoever; and the fact that the Government may have formulated, furnished, or in any way supplied the said drawings, specifications or other data is not to be regarded by implication or otherwise as in any manner licensing the holder or any other person or corporation, or conveying any rights or permission to manufacture, use, or sell any patented invention that may in any way be related thereto.

PANELBOARD ENCLOSURE SHALL BE NEMA 1.

PANEL "L1" SCHEDULE

22,000 A.I.C. MINIMUM

SURFACE MTD., CIRCUIT BREAKER TYPE: 208Y/120V., 3ø, 4W, 60Hz, W/ NEUT. & GROUND BUS AND 150A MAIN BREAKER

L1

POLE NO.	TRIP AMPS	NO. POLES	WIRE SIZE	COND. SIZE	REMARKS	PHASE A	PHASE B	PHASE C	REMARKS	COND. SIZE	WIRE SIZE	NO. POLES	TRIP AMPS	POLE NO.
1	20	1	2#12 1#12(G)	3/4"	EAST RECEPTACLES	900			CENTRAL RECEPTACLES	3/4"	2#12 1#12(G)	1	20	2
						720								
3	20	1	2#12 1#12(G)	3/4"	WEST RECEPTACLES		1000		PUMP CONTROL PANEL	3/4"	2#12 1#12(G)	1	20	4
							1260							
5	20	1	2#12 1#12(G)	3/4"	FLOW TRANSMITTER FIT 20-1			960	FIRE PROTECTION COMPRESSOR	3/4"	2#12 1#12(G)	1	20	6
								50						
7	20	1	2#12 1#12(G)	3/4"	FIRE ALARM CONTROL PANEL	50			LEVEL TRANSMITTER LIT 40-1	3/4"	2#12 1#12(G)	1	20	8
						–								
9	20	1	2#12 1#12(G)	3/4"	LEVEL TRANSMITTER LIT 40-2		1000		FIRE ALARM TRANSMITTER PANEL	3/4"	2#12 1#12(G)	1	20	10
							50							
11	20	1	2#12 1#12(G)	3/4"	EGRESS LIGHTS			3000	RTU-1 HVAC	1"	2#8 1#10(G)	2	40	12
								24						
13	20	1	2#12 1#12(G)	3/4"	FIRE ALARM TRANSCEIVER CABINET	3000								14
						–								
15	20	1	2#12 1#12(G)	3/4"	NORTH RECEPTACLES		1833		PANEL L2	1 ½"	3#6 1#10(G)	3	60	16
17	20	1	2#12 1#12(G)	3/4"	EF-1			1833						18
								350						
19	20	1	2#12 1#12(G)	3/4"	EF-2	1833								20
						350								
21	20	1	2#12 1#12(G)	3/4"	EF-3		600		ANALYZER PANEL 20FP-1	½"	3#6 1#10(G)	3	60	22
							350							
23	20	1	2#12 1#12(G)	3/4"	CHEMICAL FEED SKID 44-SKD-1			600	ANALYZER PANEL 30FP-1	½"	3#6 1#10(G)	3	60	24
								600						
25	20	1	2#12 1#12(G)	3/4"	CHEMICAL FEED SKID 54-SKD-1	–			SPARE TO PULL BOX PB1	1"	–	1	20	26
						600								
27	20	1	–	1"	SPARE TO PULL BOX PB1		–		SPACE	–	–	–	–	28
29	–	–	–	–	SPACE				SPACE	–	–	–	–	30
31	–	–	–	–	SPACE				SPACE	–	–	–	–	32
33	–	–	–	–	SPACE				SPACE	–	–	–	–	34
35	–	–	–	–	SPACE				SPACE	–	–	–	–	36
37	–	–	–	–	SPACE				TVSS	–	–	3	30	38
39	–	–	–	–	SPACE									40
41	–	–	–	–	SPACE									42
					VA	7453	6093	7417	TOTAL VA = 20,963					
					AMPS	62.06	50.74	61.76						

PANELBOARD ENCLOSURE SHALL BE NEMA 1.

PANEL "L2" SCHEDULE

10,000 A.I.C. MINIMUM LOCATED IN GENERATOR ENCLOSURE

SURFACE MTD., CIRCUIT BREAKER TYPE: 208Y/120V., 3ø, 4W, 60Hz, 125A MAIN BUS, W/ NEUT. & GROUND BUS AND MAIN LUGS ONLY

L2

POLE NO.	TRIP AMPS	NO. POLES	WIRE SIZE	COND. SIZE	REMARKS	PHASE A	PHASE B	PHASE C	REMARKS	COND. SIZE	WIRE SIZE	NO. POLES	TRIP AMPS	POLE NO.
1	20	1	2#12 1#12(G)	3/4"	DAY TANK PUMP	1080			BATTERY CHARGER	3/4"	2#12 1#12(G)	1	20	2
						912								
3	20	1	2#12 1#12(G)	3/4"	ENCLOSURE LIGHTS		600		VENT LOUVER OPERATOR	3/4"	2#12 1#12(G)	1	15	4
							320							
5	20	1	2#12 1#12(G)	3/4"	ENCLOSURE RECEPTACLES			1200	JACKET WATER HEATER	1"	2#10 1#10(G)	1	30	6
								180						
7	–	–	–	–	SPACE	1200								8
9	–	–	–	–	SPACE				SPACE	–	–	–	–	10
11	–	–	–	–	SPACE				SPACE	–	–	–	–	12
13	–	–	–	–	SPACE				SPACE	–	–	–	–	14
15	–	–	–	–	SPACE				SPACE	–	–	–	–	16
17	–	–	–	–	SPACE				SPACE	–	–	–	–	18
19	–	–	–	–	SPACE				TVSS	–	–	3	30	20
21	–	–	–	–	SPACE									22
23	–	–	–	–	SPACE									24
					VA	3200	900	1400	TOTAL VA = 5500					
					AMPS	26.6	7.5	11.7						

PANELBOARD ENCLOSURE SHALL BE NEMA 1.

PANEL "SL1" SCHEDULE

22,000 A.I.C. MINIMUM

SURFACE MTD., CIRCUIT BREAKER TYPE: 480Y/277V, 3ø, 4W, 60Hz, W/ NEUT. & GROUND BUS AND 100A MAIN BREAKER

SL1

POLE NO.	TRIP AMPS	NO. POLES	WIRE SIZE	COND. SIZE	REMARKS	PHASE A	PHASE B	PHASE C	REMARKS	COND. SIZE	WIRE SIZE	NO. POLES	TRIP AMPS	POLE NO.
1	20	1	2#12 1#12(G)	3/4"	EXIT AND EMERGENCY LIGHTS	432			ELECTRICAL ROOM LIGHTS	3/4"	2#12 1#12(G)	1	20	2
						136								
3	20	1	2#12 1#12(G)	3/4"	HIGH BAY LIGHTS		–		SPARE	–	–	1	20	4
							1050							
5	20	1	2#12 1#12(G)	3/4"	HIGH BAY LIGHTS			–	SPARE	–	–	1	20	6
								900						
7	20	1	–	1"	SPARE TO PULL BOX PB1	–			SPARE	–	–	1	20	8
9	20	1	–	–	SPARE		–		SPACE	–	–	–	–	10
11	–	–	–	–	SPACE				SPACE	–	–	–	–	12
13	–	–	–	–	SPACE				SPACE	–	–	–	–	14
15	–	–	–	–	SPACE				SPACE	–	–	–	–	16
17	–	–	–	–	SPACE				SPACE	–	–	–	–	18
19	–	–	–	–	SPACE				SPACE	–	–	–	–	20
21	–	–	–	–	SPACE				SPACE	–	–	–	–	22
23	–	–	–	–	SPACE				SPACE	–	–	–	–	24
25	–	–	–	–	SPACE				SPACE	–	–	–	–	26
27	–	–	–	–	SPACE				SPACE	–	–	–	–	28
29	–	–	–	–	SPACE				SPACE	–	–	–	–	30
31	–	–	–	–	SPACE				SPACE	–	–	–	–	32
33	–	–	–	–	SPACE				SPACE	–	–	–	–	34
35	–	–	–	–	SPACE				SPACE	–	–	–	–	36
37	–	–	–	–	SPACE				TVSS	–	–	3	30	38
39	–	–	–	–	SPACE									40
41	–	–	–	–	SPACE									42
					VA	568	1426	900	TOTAL VA = 2894					
					AMPS	2.05	5.15	3.25						

MOTOR CONTROL CENTER SCHEDULE "MCC"

SECTION IDENT.	CIRCUIT NUMBER	BREAKER NO. POLES	BREAKER TRIP AMPS	STARTER SIZE	POWER PHASE CNDCT	POWER NEUTRAL CNDCT	POWER GROUND WIRE	POWER HTR CKT	POWER CONDUIT SIZE	I & C CIRCUIT NUMBER	CONTROL/MONITOR DEVICE @MCC	CONTROL/MONITOR DEVICE REMOTE	CONTROL/MONITOR TIME DELAY	CONTROL/MONITOR WIRE SIZE	CONTROL/MONITOR CND SIZE	INDICATING LTS @ MCC RED	INDICATING LTS @ MCC GREEN	INDICATING LTS @ MCC YELLOW	NAMEPLATE
A2	–	3	–	–	–	–	–	–	–	–	–	–	–	–	–	–	–	–	CIRCUIT MONITOR
A3	–	3	–	–	–	–	–	–	–	–	–	–	–	–	–	–	–	–	SURGE PROTECTIVE DEVICE
A4	MCC-2	3	70	–	3#2	–	1#6	–	2"	–	–	–	–	–	–	–	–	–	45 KVA TRANSFORMER/PANEL L1
A5	MCC-3	3	100	–	3#2	1#2	1#6	–	2"	–	–	–	–	–	–	–	–	–	PANEL SL1
A6	–	–	–	–	–	–	–	–	–	–	–	–	–	–	–	–	–	–	SPACE
B1	MCC-4	3	125	4-VFD	3#1	–	1#6	2#12	2"	–	HOA	–	–	2#14	3/4"	–	–	–	BOOSTER PUMP No 1
C1	MCC-5	3	125	4-VFD	3#1	–	1#6	2#12	2"	–	HOA	–	–	2#14	3/4"	–	–	–	BOOSTER PUMP No 2
D1	MCC-6	3	125	4-VFD	3#1	–	1#6	2#12	2"	–	HOA	–	–	2#14	3/4"	–	–	–	BOOSTER PUMP No 3
F1	MCC-7	–	–	–	–	–	–	–	1-2"	–	–	–	–	–	–	–	–	–	SPARE CONDUIT TO PULL BOX PB1
E1	MCC-8	–	–	–	–	–	–	–	1-2"	–	–	–	–	–	–	–	–	–	SPARE CONDUIT TO FUTURE PUMP
											TOTAL LOAD		111.1 KVA						

MISCELLANEOUS CIRCUITS SCHEDULE

CIRCUIT NUMBER	FROM	TO	POWER PHASE COND	POWER NEUTRAL CONDUCTOR	POWER GROUND CONDUCTOR	CONDUIT
45KVA-SEC	45 KVA TRANSFORMER SECONDARY	PANEL L1	3#2/0	1#2/0	1#4	2"
NP1	PAD MOUNT TRANSFORMER	AUTOMATIC TRANSFER SWITCH	6#350	2#350	2#350	2-4"
EP1	STANDBY GENERATOR No 1	AUTOMATIC TRANSFER SWITCH	6#350	2#350	2#1	2-4"
ATS1	AUTOMATIC TRANSFER SWITCH	MOTOR CONTROL CENTER	6#350	2#350	2#1	2-4"
PP1	RISER AT FLORIDA POWER & LIGHT POLE	PAD MOUNT TRANSFORMER	3-1/C 4/0, EPR, GFE	1-1/C 4/0, EPR, GFE	–	4"
SS1	500 KVA TRANSFORMER	SERVICE ENTRANCE RATED ENCLOSED CIRCUIT BREAKER	3#2	1#2	1#8	2"
SS2	SERVICE ENTRANCE RATED ENCLOSED CIRCUIT BREAKER	BUILDING NG-1009 MAIN CIRCUIT BREAKER	3#2	1#2	1#8	2"
SP1	PUMP STATION CONTROL PANEL	FUTURE PUMP LOCATION IN PUMP ROOM	–	–	–	3/4"

LIGHTING FIXTURE SCHEDULE

TYPE	MANUFACTURER	CATALOG NUMBER	WATTS	MOUNTING	REMARKS
LF-1	DIALIGHT	LPK-00-064-3112-400	72	CEILING	277V – CLOSED INDUSTRIAL LED
LF-2	HUBBELL	LCC-12L1-1-LP	12	WALL – 8' AFG	120V – LED WALL PACK
LF-3	DIALIGHT	HB2C4M	150	PENDANT – 15' AFF	277V – LED HIGH BAY WITH CLEAR ACRYLIC LENSE
LF-4	DUAL LIGHTING	PGZ SERIES, BRONZE	15.7	WALL – 8' AFF	277V – LED EMERGENCY LIGHT WITH BATTERY
LF-5	DUAL LIGHTING	SEWL-D-R-W-E	15.7	CEILING OR WALL AS REQD.	277V – LED EXIT SIGN WITH EMERGENCY BATTERY

* MANUFACTURERS AND CATALOG NUMBERS LISTED ARE BASIS FOR DESIGN.

THIS SPACE RESERVED

SYM	ZONE	DESCRIPTION	DATE	APPROVED
A		ADDED SHEET - INITIAL RELEASE TO EDC	12/05/11	KAR

REVISIONS

THIS DRAWING CREATED IN AUTOCAD 2010 FILE FORMAT AND WILL BE REVISED ONLY ON AN AUTOCAD SYSTEM. FILE: 14000189-DP5-E08.DWG

JONES EDMUNDS
730 NE WALDO ROAD, GAINESVILLE, FLORIDA 32641 / (352) 377-5821
3910 S WASHINGTON AVE, SUITE 210, TITUSVILLE, FLORIDA 32780 / (321) 269-2950

SIGNATURES	DATE
DRAWN L. MILLER	12/05/11
CHECKED M. KOROS	12/05/11
SUBMITTED M. CLARK	12/05/11
ST of LICENSURE: FL LICENSE NO: 48898	
APPROVED M. CLARK	12/5/11
D. TRANG	12/5/11

NATIONAL AERONAUTICS AND SPACE ADMINISTRATION
JOHN F. KENNEDY SPACE CENTER, NASA
KENNEDY SPACE CENTER, FLORIDA

REVITALIZE WATER & WASTEWATER SYSTEMS - VOLUME 5 OF 5
W1 PUMP STATION REPLACEMENT

ELECTRICAL SCHEDULES

FILE NO.	SIZE	DWG. NO.	REV
	F	79K38877 VOL 5	A

PROJ. NO. 96968.3 SHEET 47

E8

NOTICE: When Government drawings, specifications, or other data are used for any purpose other than in connection with a definitely related Government procurement operation, the United States Government thereby incurs no responsibility nor obligation whatsoever; and the fact that the Government may have formulated, furnished, or in any way supplied the said drawings, specifications or other data is not to be regarded by implication or otherwise as in any manner licensing the holder or any other person or corporation, or conveying any rights or permission to manufacture, use, or sell any patented invention that may in any way be related thereto.

W-1 PUMP STATION - INSTRUMENTATION AND CONTROL WIRING SCHEDULE

CIRCUIT NUMBER	FROM	TO	SIGNAL TYPE	CONDUCTORS ANALOG	CONDUCTORS DISCRETE	CONDUCTORS GROUND	CONDUIT	ALARM OR FUNCTION
	FIELD INSTRUMENT SIGNALS							
S1010	PUMP STATION CONTROL PANEL	VARIABLE FREQUENCY DRIVE 10VFD-1	4-20mA	2 #16 TSP	-	-	1"	VFD SPEED CONTROL AND FEEDBACK SIGNALS
S1011	PRESSURE TRANSMITTER 10PIT-1	PUMP STATION CONTROL PANEL	4-20mA	1 #16 TSP	-	-	3/4"	HIGH SERVICE PUMP SUCTION PRESSURE
S1020	PUMP STATION CONTROL PANEL	VARIABLE FREQUENCY DRIVE VFD-2	4-20mA	2 #16 TSP	-	-	1"	VFD SPEED CONTROL AND FEEDBACK SIGNALS
S1030	PUMP STATION CONTROL PANEL	VARIABLE FREQUENCY DRIVE VFD-3	4-20mA	2 #16 TSP	-	-	1"	VFD SPEED CONTROL AND FEEDBACK SIGNALS
S2010	FLOW ELEMENT 20FE-1	FLOW TRANSMITTER 20FIT-1	mV	CFWE	-	-	3/4"	HIGH SERVICE PUMP FLOW RATE
S2011	FLOW TRANSMITTER 20FIT-1	PUMP STATION CONTROL PANEL	4-20 mA	1#16-TSP	-	-	3/4"	HIGH SERVICE PUMP FLOW RATE
S2012	PRESSURE TRANSMITTER 20PIT-1	PUMP STATION CONTROL PANEL	4-20 mA	1#16-TSP	-	-	3/4"	HIGH SERVICE PUMP DISCHARGE PRESSURE
S2013	ANALYZER PANEL 20-1	PUMP STATION CONTROL PANEL	4-20 mA	3#16-TSP	-	-	1"	ANALYZER SIGNALS
S3011	ANALYZER PANEL 30-1	PUMP STATION CONTROL PANEL	4-20 mA	2#16-TSP	-	-	1"	ANALYZER SIGNALS
S4010	LEVEL ELEMENT 40LE-1	LEVEL TRANSMITTER 40LIT-1	mA	CFWE	-	-	3/4"	TANK LEVEL SIGNAL - ULTRASONIC LEVEL ELEMENT TO LEVEL TRANSMITTER
S4011	LEVEL TRANSMITTER 40LIT-1	JUNCTION BOX	4-20mA	CFWE	-	-	3/4"	TANK LEVEL SIGNAL - ULTRASONIC LEVEL TRANSMITTER CABLE TO JUNCTION BOX
S4020	LEVEL ELEMENT 40LE-2	LEVEL TRANSMITTER 40LIT-1	mA	CFWE	-	-	3/4"	TANK LEVEL SIGNAL - ULTRASONIC LEVEL ELEMENT TO LEVEL TRANSMITTER
S4021	LEVEL TRANSMITTER 40LIT-2	JUNCTION BOX	4-20mA	CFWE	-	-	3/4"	TANK LEVEL SIGNAL - ULTRASONIC LEVEL TRANSMITTER CABLE TO JUNCTION BOX
S4022	JUNCTION BOX	PUMP STATION CONTROL PANEL	4-20 mA	1#16-TSP	-	-	3/4"	TANK LEVEL SIGNAL - FROM JUNCTION BOX TO PLC
S4410	PUMP STATION CONTROL PANEL	SODIUM HYPOCHLORITE CHEMICAL FEED SKID JUNCTION BOX	4-20 mA	7#16-TSP	-	-	2"	METERING PUMP FEED SIGNALS
S5410	PUMP STATION CONTROL PANEL	AMMONIUM SULFATE CHEMICAL FEED SKID	4-20 mA	7#16-TSP	-	-	2"	METERING PUMP FEED SIGNALS
	CONTROL SIGNALS							
C1000	AUTOMATIC TRANSFER SWITCH	GENERATOR CONTROL PANEL	120V	-	2#14	1#14	3/4"	GENERATOR START SIGNAL
C1010	PUMP STATION CONTROL PANEL	VARIABLE FREQUENCY DRIVE 10VFD-1	120V	-	10#14	1#14	2"	VFD RUN,FAULT,AND STATUS SIGNAL
C1020	PUMP STATION CONTROL PANEL	VARIABLE FREQUENCY DRIVE 10VFD-2	120V	-	10#14	1#14	2"	VFD RUN,FAULT,AND STATUS SIGNAL
C1030	PUMP STATION CONTROL PANEL	VARIABLE FREQUENCY DRIVE 10VFD-3	120V	-	10#14	1#14	2"	VFD RUN,FAULT,AND STATUS SIGNAL
C2010	FLOW SWITCH 10FSL-1	PUMP STATION CONTROL PANEL	120V	-	2#14	1#14	3/4"	PUMP FLOW STATUS
C2020	FLOW SWITCH 10FSL-2	PUMP STATION CONTROL PANEL	120V	-	2#14	1#14	3/4"	PUMP FLOW STATUS
C2030	FLOW SWITCH 10FSL-3	PUMP STATION CONTROL PANEL	120V	-	2#14	1#14	3/4"	PUMP FLOW STATUS
C2040	FLOW SWITCH 20FSH-1	PUMP STATION CONTROL PANEL	120V	-	2#14	1#14	3/4"	SAFETY SHOWER FLOW SWITCH ALARM
C4010	FLOW SWITCH 40FSH-1	PUMP STATION CONTROL PANEL	120V	-	2#14	1#14	3/4"	SAFETY SHOWER FLOW SWITCH ALARM
C4011	LEVEL SWITCH 40LSH-1	PUMP STATION CONTROL PANEL	120V		2#14	1#14	3/4"	SODIUM HYPOCHLORITE STORAGE TANK LEVEL ALARM
C5010	FLOW SWITCH 50FSH-1	PUMP STATION CONTROL PANEL	120V	-	2#14	1#14	3/4"	SAFETY SHOWER FLOW SWITCH ALARM
C5011	LEVEL SWITCH 50LSH-1	PUMP STATION CONTROL PANEL	120V	-	2#14	1#14	3/4"	AMMONIA STORAGE TANK LEVEL ALARM
C6000	THERMOSTAT	RTU-1 HVAC	-	-	-	-	1"	SIZE CABLE AND INSTALL ACCORDING TO MANUFACTURER RECOMMENDATIONS
C6010	AUTOMATIC TRANSFER SWITCH	PUMP STATION CONTROL PANEL	120V	-	6#14	1#14	1"	ATS STATUS SIGNAL
	TELECOMMUNICATIONS SIGNALS							
T1000	W-1 PUMP STATION CIRCUIT MONITOR	W-1 PUMP STATION NETWORK INTERFACE PANEL	24 VDC	-	-	-	1"	1-CAT5e CABLE
T2000	W-1 PUMP STATION CONTROL PANEL	W-1 PUMP STATION NETWORK INTERFACE PANEL	24 VDC	-	-	-	1"	1-CAT5e CABLE
T3000	GENERATOR CIRCUIT MONITOR	W-1 PUMP STATION NETWORK INTERFACE PANEL	24 VDC	-	-	-	1"	1-CAT5e CABLE
	ALARM SIGNALS							
A1000	THERMOSTAT	W-1 PUMP STATION CONTROL PANEL	24 VDC	-	4#14	1#14	3/4"	ELECTRICAL ROOM TEMPERATURE STATUS
	FIBER OPTIC SIGNALS							
F1000	W-1 PUMP STATION NETWORK INTERFACE PANEL	KENNEDY COMPLEX CONTROL SYSTEM	-	-	-	-	2"	FIBER OPTIC CABLE TO KCCS, SEE DIVISION 27 SPECIFICATIONS

THIS SPACE RESERVED

SYM	ZONE	DESCRIPTION	DATE	APPROVED
A		ADDED SHEET- INITIAL RELEASE TO EOL	12/05/11	KM

REVISIONS

THIS DRAWING CREATED IN AUTOCAD 2010 FILE FORMAT AND WILL BE REVISED ONLY ON AN AUTOCAD SYSTEM. FILE: 14000189-DP5-E09.DWG

JONES EDMUNDS
730 NE WALDO ROAD, GAINESVILLE, FLORIDA 32641 / (352) 377-5821
3910 S WASHINGTON AVE, SUITE 210, TITUSVILLE, FLORIDA 32780 / (321) 269-2950

SIGNATURES	DATE
DRAWN L. MILLER	12/05/11
CHECKED M. KOROS	12/05/11
SUBMITTED M. CLARK	12/05/11
ST of LICENSURE: FL LICENSE NO: 48898	
APPROVED M. CLARK	12/15/11
D. TRANG	12/6/11

NATIONAL AERONAUTICS AND SPACE ADMINISTRATION
JOHN F. KENNEDY SPACE CENTER, NASA
KENNEDY SPACE CENTER, FLORIDA

REVITALIZE WATER & WASTEWATER SYSTEMS - VOLUME 5 OF 5
W1 PUMP STATION REPLACEMENT

ELECTRICAL SCHEDULES

FILE NO.	SIZE	DWG. NO.	REV
	F	79K38877 VOL 5	A

PROJ. NO. 96968.3 SHEET 48

E9

NOTICE: When Government drawings, specifications, or other data are used for any purpose other than in connection with a definitely related Government procurement operation, the United States Government thereby incurs no responsibility nor obligation whatsoever; and the fact that the Government may have formulated, furnished, or in any way supplied the said drawings, specifications or other data is not to be regarded by implication or otherwise as in any manner licensing the holder or any other person or corporation, or conveying any rights or permission to manufacture, use, or sell any patented invention that may in any way be related thereto.

NOTES:

A. PROVIDE A 36" BURIAL DEPTH FROM FINISHED GRADE TO TOP OF CONDUIT FOR ALL MEDIUM VOLTAGE CABLE CONDUITS AND 24" MINIMUM BURIAL DEPTH FOR ALL OTHER CONDUITS.

B. PROVIDE CONCRETE ENCASEMENT FOR ALL MEDIUM VOLTAGE DUCT BANKS.

C. PROVIDE #4/0 SDBC GROUND CABLE FOR ALL MEDIUM VOLTAGE DUCT BANKS.

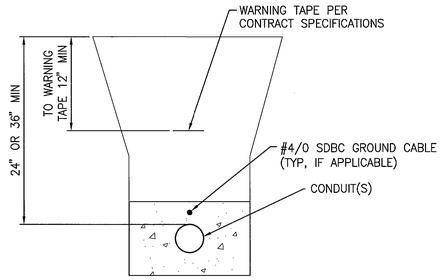

(TYPICAL ALL PAVED AREAS AND MEDIUM VOLTAGE DUCT BANKS)

TYPICAL UNDERGROUND TRENCH DETAIL

NTS

NOTE:

A. REFER TO DUCT BANK SECTIONS TO RIGHT FOR REQUIRED NUMBER OF DUCTS.

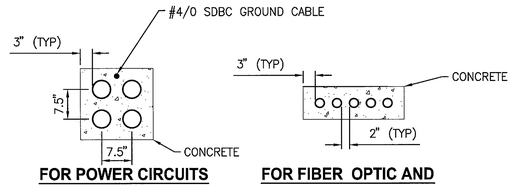

FOR POWER CIRCUITS

FOR FIBER OPTIC AND CONTROL WIRING

TYPICAL DUCT BANK WITH CONCRETE ENCASEMENT DETAIL

NTS

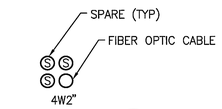

SECTION A (E3 | E10) NTS

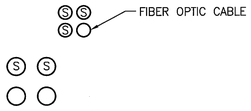

SECTION E (E3 | E10) NTS

SECTION F (E3 | E10) NTS

SECTION B (E3 | E10) NTS

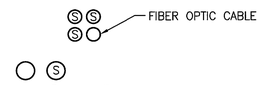

SECTION C (E3 | E10) NTS

SECTION D (E3 | E10) NTS

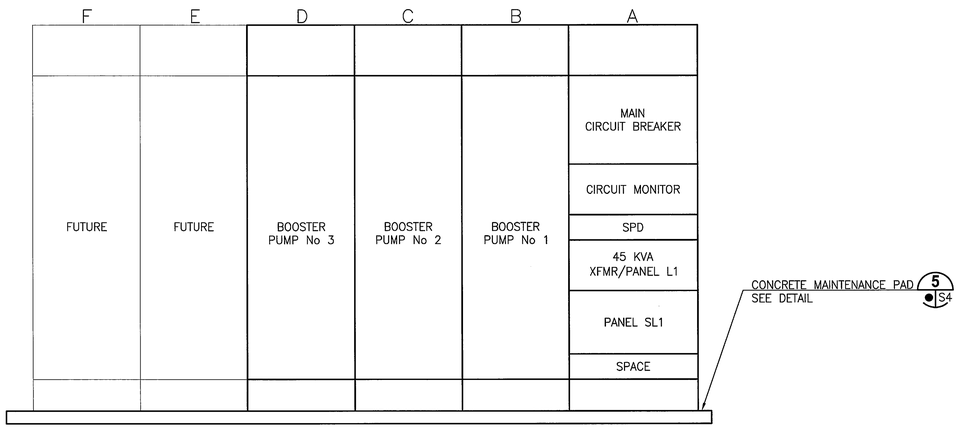

NOTE:

A. EXACT LAYOUT DEPENDENT UPON EQUIPMENT MANUFACTURER.

MOTOR CONTROL CENTER RISER DIAGRAM (1)

NTS (E5 | E10)

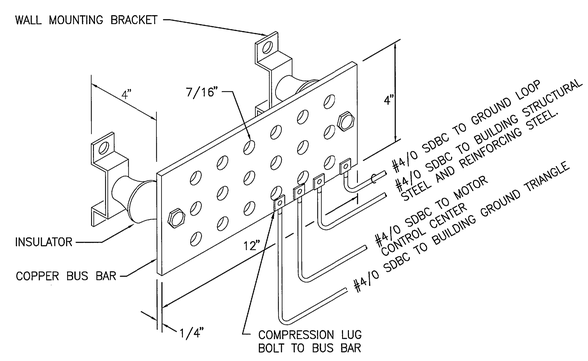

TYPICAL GROUND BAR DETAIL (2)

NTS (E10)

THIS SPACE RESERVED

SYM	ZONE	DESCRIPTION	DATE	APPROVED
A		ADDED SHEET- INITIAL RELEASE TO EDC	12/05/11	

REVISIONS

THIS DRAWING CREATED IN AUTOCAD 2010 FILE FORMAT AND WILL BE REVISED ONLY ON AN AUTOCAD SYSTEM. FILE: 14000189-DP5-E10.DWG

JONES EDMUNDS
730 NE WALDO ROAD, GAINESVILLE, FLORIDA 32641 / (352) 377-5821
3910 S WASHINGTON AVE, SUITE 210, TITUSVILLE, FLORIDA 32780 / (321) 269-2950

SIGNATURES	DATE
DRAWN L. MILLER	12/05/11
CHECKED M. KOROS	12/05/11
SUBMITTED M. CLARK	12/05/11
ST of LICENSURE: FL LICENSE NO: 48898	
APPROVED M. CLARK	12/5/11
D. TRANG	12/5/11

NATIONAL AERONAUTICS AND SPACE ADMINISTRATION
JOHN F. KENNEDY SPACE CENTER, NASA
KENNEDY SPACE CENTER, FLORIDA

REVITALIZE WATER & WASTEWATER SYSTEMS - VOLUME 5 OF 5
W1 PUMP STATION REPLACEMENT

ELECTRICAL DETAILS

FILE NO.	SIZE	DWG. NO.	REV
	F	79K38877 VOL 5	A
PROJ. NO. 96968.3		SHEET 49	

E10

NOTICE: When Government drawings, specifications, or other data are used for any purpose other than in connection with a definitely related Government procurement operation, the United States Government thereby incurs no responsibility nor obligation whatsoever; and the fact that the Government may have formulated, furnished, or in any way supplied the said drawings, specifications or other data is not to be regarded by implication or otherwise as in any manner licensing the holder or any other person or corporation, or conveying any rights or permission to manufacture, use, or sell any patented invention that may in any way be related thereto.

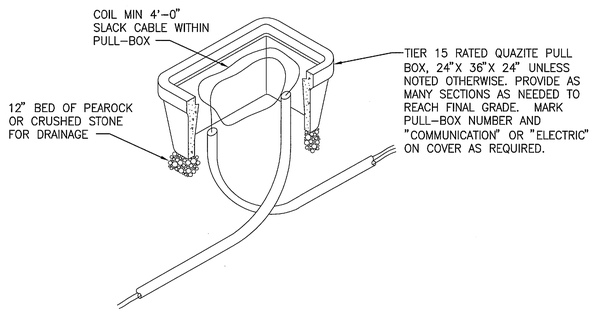

UNDERGROUND PULL BOX INSTALLATION DETAIL (1/E11)

NTS

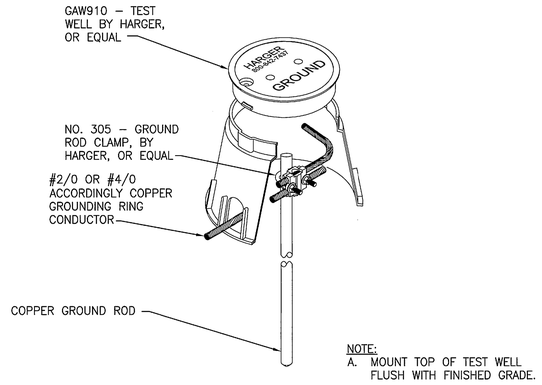

GROUND ROD TEST WELL DETAIL (2/E11)

NTS

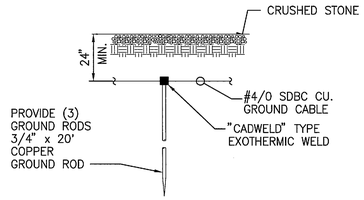

GROUND ROD DETAIL (3/E11)

NTS

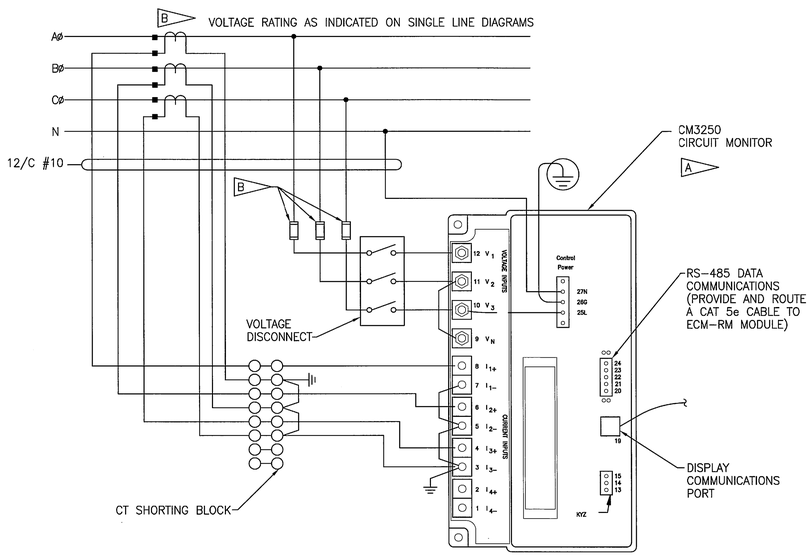

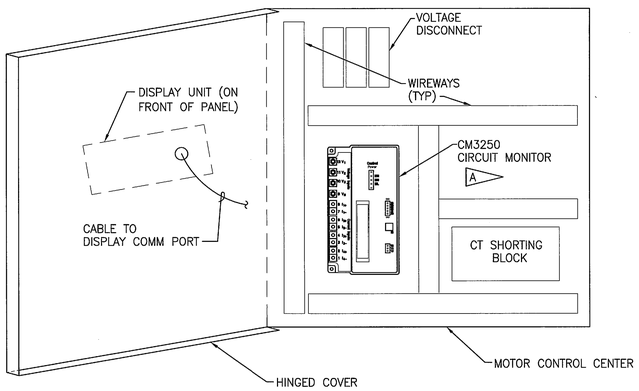

CIRCUIT MONITOR DETAILS (4/E11)

NTS

NOTES:

A. PROVIDE CM 3250 POWER METER TO BE HOUSED IN MCC.

B. PROVIDE THE FOLLOWING AS INDICATED:

- MULTI-RATIO CURRENT TRANSFORMER (THREE). DOT INDICATES POLARITY.
- FUSE TO BE SIZED PER MANUFACTURER'S RECOMMENDATIONS. PROVIDE PORCELAIN FUSE BLOCK IN THE XFMR SECONDARY COMPARTMENT. PROVIDE IN-LINE FUSE HOLDERS (BUSS TYPE HEG OR APPROVED EQUAL) IN METER POTENTIAL LEADS.

THIS SPACE RESERVED

SYM	ZONE	DESCRIPTION	DATE	APPROVED
A		ADDED SHEET - INITIAL RELEASE TO EDC	12/05/11	KM

REVISIONS

THIS DRAWING CREATED IN AUTOCAD 2010 FILE FORMAT AND WILL BE REVISED ONLY ON AN AUTOCAD SYSTEM. FILE: 14000189-DP5-E11.DWG

JONES EDMUNDS
730 NE WALDO ROAD, GAINESVILLE, FLORIDA 32641 / (352) 377-5821
3910 S WASHINGTON AVE, SUITE 210, TITUSVILLE, FLORIDA 32780 / (321) 269-2950

SIGNATURES	DATE
DRAWN L. MILLER	12/05/11
CHECKED M. KOROS	12/05/11
SUBMITTED M. CLARK	12/05/11
ST of LICENSURE: FL LICENSE NO: 48898	
APPROVED M. CLARK	12/5/11
D. TRANG	12/5/11

NATIONAL AERONAUTICS AND SPACE ADMINISTRATION
JOHN F. KENNEDY SPACE CENTER, NASA
KENNEDY SPACE CENTER, FLORIDA

REVITALIZE WATER & WASTEWATER SYSTEMS - VOLUME 5 OF 5
W1 PUMP STATION REPLACEMENT

ELECTRICAL DETAILS

FILE NO.	SIZE	DWG. NO.	REV
	F	79K38877 VOL 5	A

PROJ. NO. 96968.3 SHEET 50

E11

NOTICE: When Government drawings, specifications, or other data are used for any purpose other than in connection with a definitely related Government procurement operation, the United States Government thereby incurs no responsibility nor obligation whatsoever; and the fact that the Government may have formulated, furnished, or in any way supplied the said drawings, specifications or other data is not to be regarded by implication or otherwise as in any manner licensing the holder or any other person or corporation, or conveying any rights or permission to manufacture, use, or sell any patented invention that may in any way be related thereto.

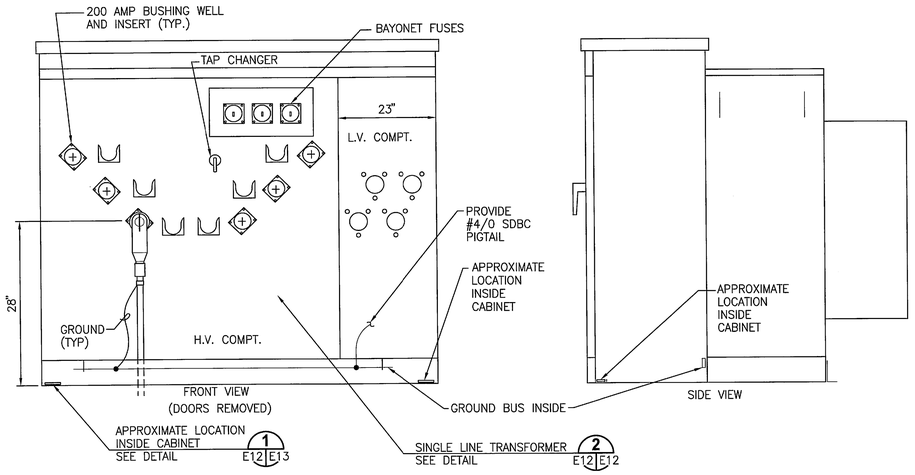

NOTES:
A. MINIMUM DIMENSIONS ARE SHOWN

B. ALL CONNECTIONS TO GROUND BUS SHALL BE MADE WITH SEPARATE BOLTED COMPRESSION LUGS.

3 PHASE PADMOUNTED TRANSFORMER DETAIL 1 E6 E12

NTS

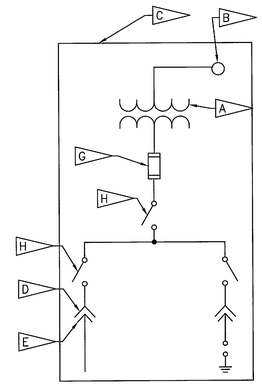

NOTES:

A. LIQUID INSULATED TRANSFORMER

B. LOW VOLTAGE BUSHINGS

C. SEE SPECS FOR ADDITIONAL DATA.

D. PROVIDE 6– 200 AMP BUSHING WELLS AND 6 – PARKING STANDS

E. PROVIDE 3– 200 AMP LOAD BREAK ELBOWS AND 3 STAND–OFF INSULATORS IN THE PARKING STANDS FOR THE INCOMING FEEDER, SEE DETAIL 4 E12

F. PROVIDE 3– DEAD FRONT SURGE ARRESTERS SIZED PER MANUFACTURER'S RECOMMENDATIONS.

G. 3 FUSE HOLDERS WITH BAYONET FUSES.

H. 2 POSITION LOADBREAK SWITCH

TYPICAL 3 PHASE PADMOUNT TRANSFORMER SINGLE LINE 2 E12 E12

NTS

NOTES:
A. DIMENSIONS SHOWN ARE TYPICAL. ADJUST TO SUIT EQUIPMENT FURNISHED.

B. CONCRETE PAD SHALL EXTEND 6" BEYOND TRANSFORMER ON ALL SIDES.

C. PROVIDE EXOTHERMIC WELD TO EXISTING COUNTERPOISE.

D. TRANSFORMER PAD & CONDUIT ENTRY WINDOW SHALL BE SIZED PER MANUFACTURER'S RECOMMENDATIONS.

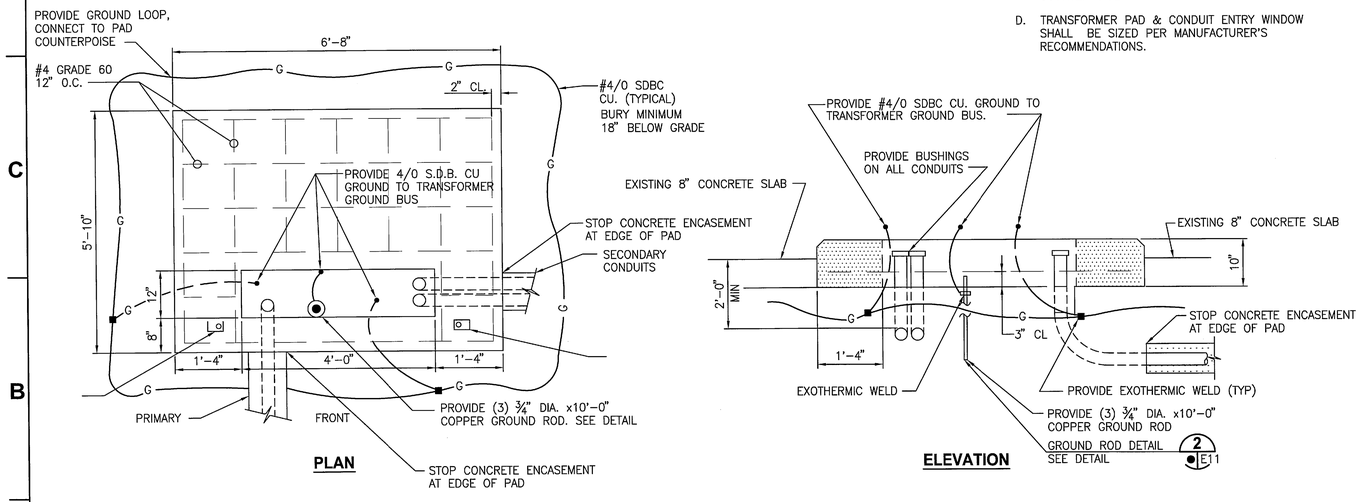

TYPICAL 3 PHASE TRANSFORMER PAD DETAIL 3 E12

NTS

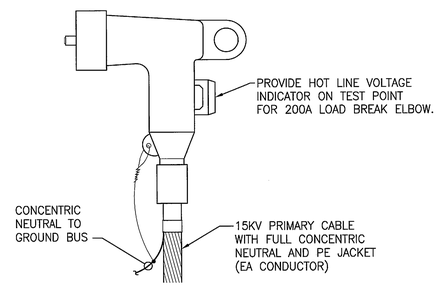

15KV, 200A. LOADBREAK ELBOW DETAIL 4 E12

NTS

THIS SPACE RESERVED

SYM	ZONE	DESCRIPTION	DATE	APPROVED
A		ADDED SHEET - INITIAL RELEASE TO EDC	12/05/11	KM

REVISIONS

THIS DRAWING CREATED IN AUTOCAD 2010 FILE FORMAT AND WILL BE REVISED ONLY ON AN AUTOCAD SYSTEM. FILE: 14000189–DP5–E12.DWG

JONES EDMUNDS
730 NE WALDO ROAD, GAINESVILLE, FLORIDA 32641 / (352) 377-5821
3910 S WASHINGTON AVE, SUITE 210, TITUSVILLE, FLORIDA 32780 / (321) 269-2950

SIGNATURES	DATE
DRAWN L. MILLER	12/05/11
CHECKED M. KOROS	12/05/11
SUBMITTED M. CLARK	12/05/11
ST of LICENSURE: FL LICENSE NO: 48898	
APPROVED M. CLARK	12/5/11
D. TRANG	12/5/11

NATIONAL AERONAUTICS AND SPACE ADMINISTRATION
JOHN F. KENNEDY SPACE CENTER, NASA
KENNEDY SPACE CENTER, FLORIDA

REVITALIZE WATER & WASTEWATER SYSTEMS - VOLUME 5 OF 5
W1 PUMP STATION REPLACEMENT

ELECTRICAL DETAILS

FILE NO.	SIZE	DWG. NO.	REV
	F	79K38877 VOL 5	A
PROJ. NO. 96968.3		SHEET 51	

E12

NOTICE: When Government drawings, specifications, or other data are used for any purpose other than in connection with a definitely related Government procurement operation, the United States Government thereby incurs no responsibility nor obligation whatsoever; and the fact that the Government may have formulated, furnished, or in any way supplied the said drawings, specifications or other data is not to be regarded by implication or otherwise as in any manner licensing the holder or any other person or corporation, or conveying any rights or permission to manufacture, use, or sell any patented invention that may in any way be related thereto.

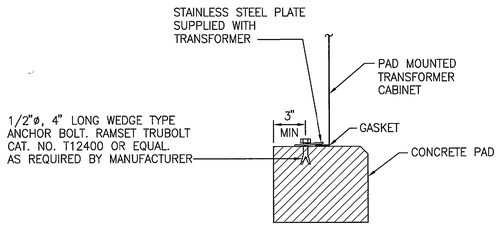

EQUIPMENT ANCHORING DETAIL (1)

NTS — E12 | E13

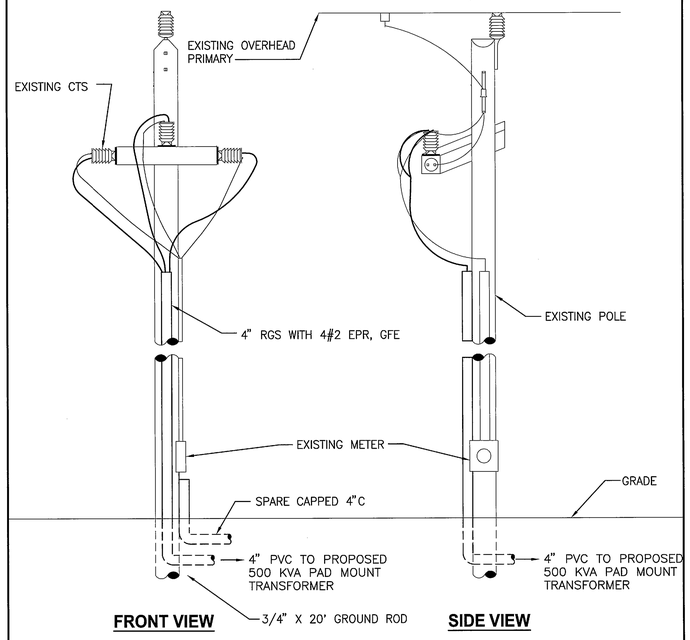

ELECTRICAL SERVICE DROP DETAIL (2)

NTS — E3 | E13

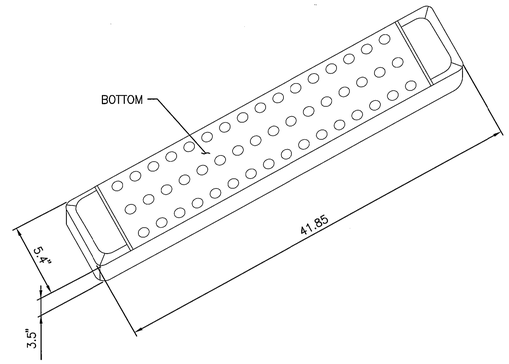

LUMINAIRE REQUIREMENTS

A. LIGHT SOURCE: 48 LONG LIFE LED'S.
B. VOLTAGE: 277V.
C. CONSTRUCTION: DIE-CAST ALUMINUM HOUSING.
D. MOUNTING: CEILING.
E. WIRING SHALL BE RATED FOR REQUIRED TEMPERATURES.
F. CERTIFICATION: UNITS SHALL BE U.L. LISTED.
G. MODEL: DIALIGHT LPK-000-064-3112-400 OR APPROVED EQUAL.

FIXTURE TYPE "LF-1"

NTS

NOTES:

A. CONTRACTOR SHALL INSTALL CONDUIT UP RISER UNTIL 6' BELOW CROSS ARM.

B. CONTRACTOR SHALL PROVIDE 8' OF CABLE LOOP TO BE CONNECTED BY FP&L.

C. CONTRACTOR SHALL COORDINATE WITH CO AND FP&L FOR ALL WORK INVOLVING EXISTING SERVICE POLES AND ASSEMBLIES.

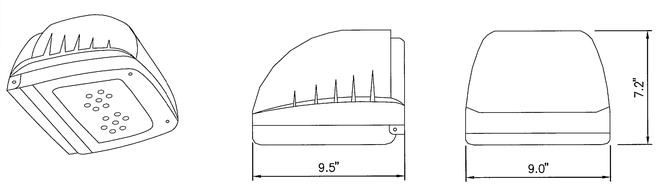

ISOMETRIC VIEW — SIDE — FRONT ELEVATION

LUMINAIRE REQUIREMENTS

A. LIGHT SOURCE: 50,000 HOUR LIFE, 12 WATT LED'S.
B. VOLTAGE: 120V.
C. CONSTRUCTION: DIE-CAST ALUMINUM HOUSING.
D. MOUNTING: WALL MOUNT TO STANDARD JUNCTION BOX OR SURFACE CONDUIT, 8' AFG.
E. WIRING: SHALL BE RATED FOR REQUIRED TEMPERATURES.
F. CERTIFICATION: UNITS SHALL BE CSA CERTIFIED TO UL1598 FOR WET LOCATION AND BE STARVIEW COMPLIANT.
G. MODEL: HUBBELL LIGHTING, INC. LAREDO # LCC-12L1-1-LP OR APPROVED EQUAL.

FIXTURE TYPE "LF-2"

NTS

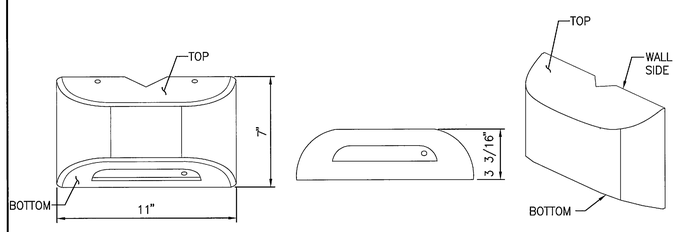

FRONT ELEVATION — BOTTOM — ISOMETRIC VIEW

LUMINAIRE REQUIREMENTS

A. LIGHT SOURCE: 4 HIGH OUTPUT LONG LIFE LED'S ARRANGED IN REDUNDANT PAIRS.
B. VOLTAGE: 277V.
C. CONSTRUCTION: DIE-CAST ALUMINUM HOUSING.
D. MOUNTING: WALL MOUNTED 8' AFF.
E. PROVIDE MAINTENANCE FREE, SEALED NICKEL CADMIUM INTERNAL BATTERY BACK-UP, PROVIDING 90 MINUTES OF ILLUMINATION.
F. CERTIFICATION: UNITS SHALL BE U.L. LISTED AND MEET REQUIREMENTS OF UL924.
G. UNITS SHALL HAVE INTEGRATED SELF-DIAGNOSTIC CIRCUITRY TO PROVIDE AUTOMATIC SYSTEM TESTING MONTHLY.
H. MODEL: HUBBELL LIGHTING, INC. DUAL LITE PGZ SERIES OR APPROVED EQUAL.

FIXTURE TYPE "LF-4"

NTS

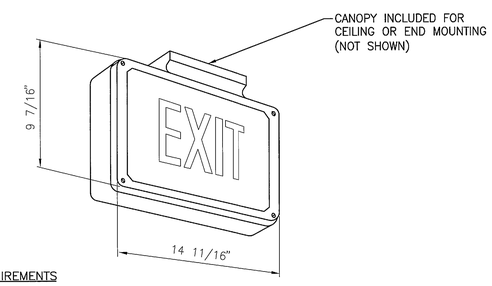

LUMINAIRE REQUIREMENTS

A. LETTERING: 6" HIGH WITH 3/4" STROKE.
B. VOLTAGE: 277V
C. LIGHT SOURCE: HIGH OUTPUT LONG LIFE LED'S WITH UNIFORMLY LIT LETTERS, NO VISIBLE LED'S.
D. CONSTRUCTION: HIGH STRENGTH DIE-CAST ALUMINUM HOUSING.
E. PROVIDE ILLUMINATED ARROWS AS INDICATED.
F. PROVIDE SINGLE/DOUBLE-FACE.
G. MOUNTING: CEILING, END, OR WALL, AS REQUIRED (CEILING MOUNT SHOWN).
H. PROVIDE INTERNAL PROVISIONS FOR GROUNDING.
I. PROVIDE MAINTENANCE FREE, SEALED NICKEL CADMIUM INTERNAL BATTERY BACK-UP, PROVIDING 90 MINUTES OF ILLUMINATION.
J. CERTIFICATION: UNITS SHALL BE U.L. LISTED AND MEET REQUIREMENTS OF UL924.
K. UNITS SHALL HAVE INTEGRATED SELF-DIAGNOSTIC CIRCUITRY TO MONITOR CHARGER PERFORMANCE AND BATTERY VOLTAGE. THE CHIP PROGRAMMING SHALL ALSO INCLUDE A 60 SECOND DISCHARGE/DIAGNOSTIC CYCLE EVERY 28 DAYS.
L. MODEL: HUBBELL LIGHTING, INC. DUAL LITE SEWL D R W E (DOUBLE, RED LETTERS, WHITE BACKGROUND, EMERGENCY OPERATION) OR APPROVED EQUAL.

FIXTURE TYPE "LF-5"

NTS

THIS SPACE RESERVED

SYM	ZONE	DESCRIPTION	DATE	APPROVED
A		ADDED SHEET- INITIAL RELEASE TO EDC	12/05/11	

REVISIONS

THIS DRAWING CREATED IN AUTOCAD 2010 FILE FORMAT AND WILL BE REVISED ONLY ON AN AUTOCAD SYSTEM. FILE: 14000189-DP5-E13.DWG

JONES EDMUNDS
730 NE WALDO ROAD, GAINESVILLE, FLORIDA 32641 / (352) 377-5821
3910 S WASHINGTON AVE, SUITE 210, TITUSVILLE, FLORIDA 32780 / (321) 269-2950

SIGNATURES	DATE
DRAWN L. MILLER	12/05/11
CHECKED M. KOROS	12/05/11
SUBMITTED M. CLARK	12/05/11
ST of LICENSURE: FL LICENSE NO: 48898	
APPROVED M. CLARK	12/5/11
D. TRANG	12/5/11

NATIONAL AERONAUTICS AND SPACE ADMINISTRATION
JOHN F. KENNEDY SPACE CENTER, NASA
KENNEDY SPACE CENTER, FLORIDA

REVITALIZE WATER & WASTEWATER SYSTEMS - VOLUME 5 OF 5
W1 PUMP STATION REPLACEMENT

ELECTRICAL DETAILS

FILE NO.	SIZE	DWG. NO.	REV
	F	79K38877 VOL 5	A
PROJ. NO. 96968.3		SHEET 52	

E13

NOTICE: When Government drawings, specifications, or other data are used for any purpose other than in connection with a definitely related Government procurement operation, the United States Government thereby incurs no responsibility nor obligation whatsoever; and the fact that the Government may have formulated, furnished, or in any way supplied the said drawings, specifications or other data is not to be regarded by implication or otherwise as in any manner licensing the holder or any other person or corporation, or conveying any rights or permission to manufacture, use, or sell any patented invention that may in any way be related thereto.

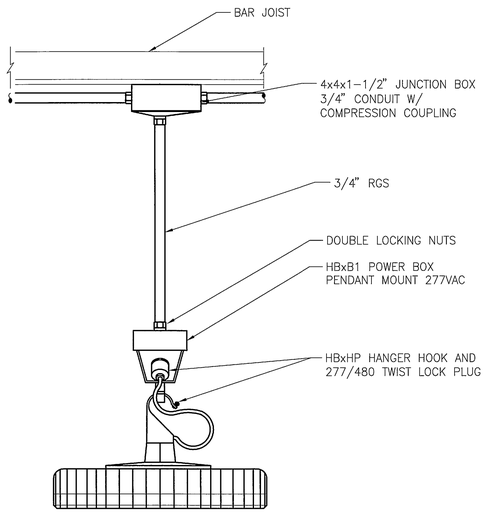

LF-3 ELEVATION VIEW

LUMINAIRE REQUIREMENTS

A. LIGHT SOURCE: LED HIGH BAY 150 W.

B. CONSTRUCTION: BODY-POWDER COATED ALUMINUM.

C. VOLTAGE: 100-277 VAC.

D. LENS: POLYCARBONATE.

E. MOUNTING: PENDANT MOUNTED FROM BAR JOIST AS SHOWN, SEE ELEVATION A E14 E14 .

F. WIRING: SHALL BE RATED FOR REQUIRED TEMPERATURES. RELOC WIRING SYSTEM OR EQUIVALENT SHALL BE USED FOR CONNECTING LIGHTING FIXTURES AND COMPONENTS.

G. CERTIFICATION: FIXTURES SHALL BE UL LISTED.

H. OPERATING TEMPERATURE: -40° TO + 149° F.

J. MODEL: DIALIGHT DUROSITE HIGH BAY HB2C4M.

FIXTURE TYPE "LF-3"

NTS

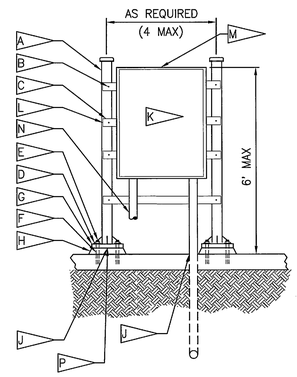

NOTES:

A. 4"x4" ALUM TUBE WITH WELDED CAP.

B. STAINLESS STEEL THRU BOLTS (TYP).

C. 1-5/8"x1-5/8" STAINLESS STEEL CHANNEL, UNISTRUT OR EQUAL. WITH STAINLESS STEEL BOLTS, WASHERS (TYP).

D. 5X5X3/8" ALUM LUG P GUSSET FOUR EACH LEG.

E. 1/2" STAINLESS STEEL HEX NUTS.

F. 1/2"X6" EPOXY ADHESIVE TYPE ANCHOR.

G. 8" x 8" x 1/2" ALUM BASE PLATE W/ (4) 9/16" DIA HOLES.

H. 1" NON-SHRINK GROUT AFTER LEVELING.

J. COAT SURFACE OF ALUMINUM IN CONTACT WITH CONCRETE WITH COAL TAR EPOXY TO PREVENT CORROSION.

K. TOTAL WEIGHT OF PANEL(S) SHALL NOT EXCEED 750 POUNDS WITHIN ANY MODULE.

L. ONE HORIZONTAL MEMBER MUST BE LOCATED WITHIN THE MIDDLE THIRD OF THE FRAME HEIGHT. PROVIDE ADDITIONAL HORIZONTAL MEMBERS AS NECESSARY.

M. OMIT STAINLESS STEEL SUPPORT AND PROVIDE TWO 12" HIGH STAINLESS STEEL FLOOR STANDS FOR ENCLOSURES 24"x24"x8". AND LARGER.

N. TO ELECTRICAL EQUIPMENT.

P. FROM SOURCE.

R. SIZE MOUNTING PLATES TO MATCH EQUIPMENT AND SECURE TO CHANNEL(S) WITH STAINLESS STEEL HARDWARE. UNLESS OTHERWISE INDICATED USE COUNTERSUNK FLAT HEAD BOLTS WHERE NECESSARY TO AVOID INTERFERENCE WITH EQUIPMENT. UTILIZE A SINGLE PLATE FOR INDIVIDUAL PIECES OF EQUIPMENT OR A SINGLE PLATE FOR MULTIPLE PIECES OF EQUIPMENT AS BEST SUITED AND TO AVOID UNDUE DEFLECTION OF CHANNELS.

T. PROVIDE SINGLE 4"X4" ALUMINUM TUBE FOR HEAVY DUTY SAFETY SWITCHES 60 AMPS OR LESS.

TYPICAL LOCAL/SLAB MOUNTED EQUIPMENT 1 E14

NTS

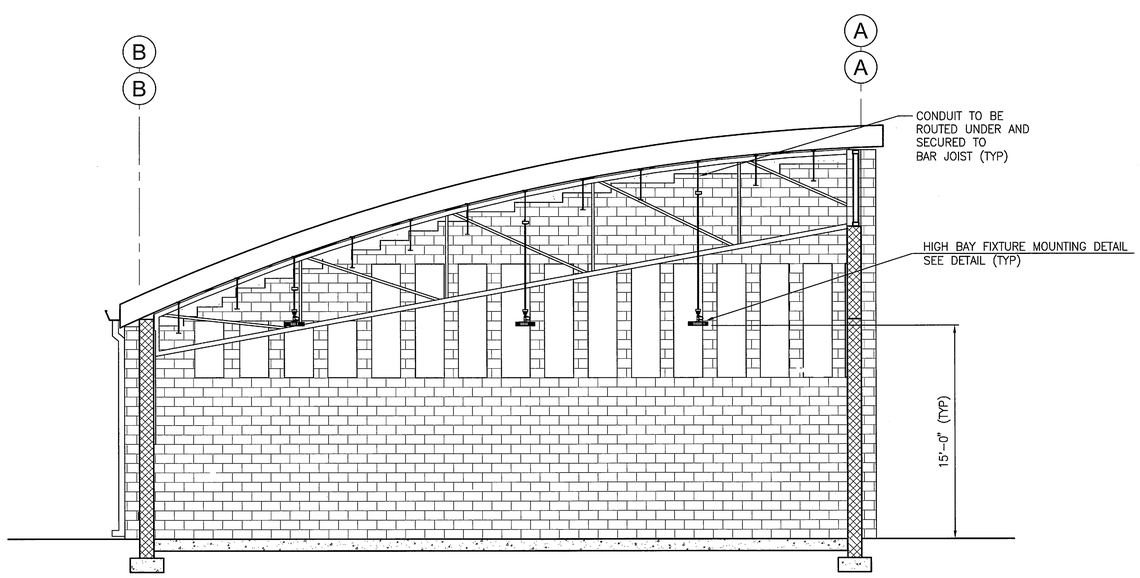

ELEVATION A

NTS E14 E14

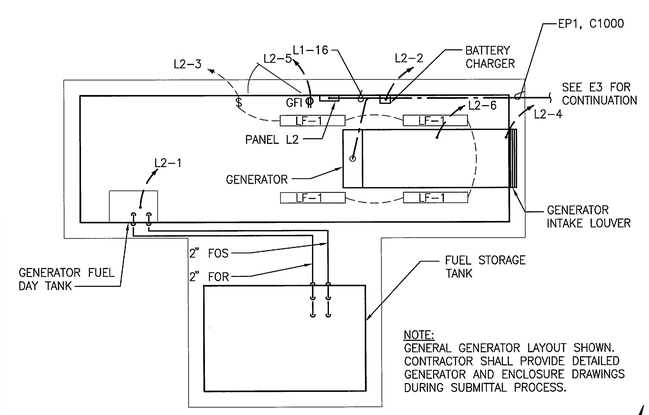

NOTE:
GENERAL GENERATOR LAYOUT SHOWN. CONTRACTOR SHALL PROVIDE DETAILED GENERATOR AND ENCLOSURE DRAWINGS DURING SUBMITTAL PROCESS.

GENERATOR AND FUEL TANK PLAN DETAIL 2 E14

1"=4'

N

GRAPHIC SCALE
0 2 4 8
SCALE IN FEET
1"=4'

E14

THIS SPACE RESERVED

SYM	ZONE	DESCRIPTION	DATE	APPROVED
A		ADDED SHEET- INITIAL RELEASE TO EOL	12/05/11	KM

REVISIONS

THIS DRAWING CREATED IN AUTOCAD 2010 FILE FORMAT AND WILL BE REVISED ONLY ON AN AUTOCAD SYSTEM. FILE: 14000189-DP5-E14.DWG

JONES EDMUNDS
730 NE WALDO ROAD, GAINESVILLE, FLORIDA 32641 / (352) 377-5821
3910 S WASHINGTON AVE, SUITE 210, TITUSVILLE, FLORIDA 32780 / (321) 269-2950

SIGNATURES	DATE
DRAWN L. MILLER	12/05/11
CHECKED M. KOROS	12/05/11
SUBMITTED M. CLARK	12/05/11
ST of LICENSURE: FL LICENSE NO: 48898	
APPROVED M. CLARK	12/5/11
D. TRANG	12/5/11

NATIONAL AERONAUTICS AND SPACE ADMINISTRATION
JOHN F. KENNEDY SPACE CENTER, NASA
KENNEDY SPACE CENTER, FLORIDA

REVITALIZE WATER & WASTEWATER SYSTEMS - VOLUME 5 OF 5
W1 PUMP STATION REPLACEMENT

ELECTRICAL DETAILS

FILE NO.	SIZE	DWG. NO.	REV
	F	79K38877 VOL 5	A

PROJ. NO. 96968.3 SHEET 53

NOTICE: When Government drawings, specifications, or other data are used for any purpose other than in connection with a definitely related Government procurement operation, the United States Government thereby incurs no responsibility nor obligation whatsoever; and the fact that the Government may have formulated, furnished, or in any way supplied the said drawings, specifications or other data is not to be regarded by implication or otherwise as in any manner licensing the holder or any other person or corporation, or conveying any rights or permission to manufacture, use, or sell any patented invention that may in any way be related thereto.

HEATING, VENTILATING, AND AIR CONDITIONING SYMBOLS

SUPPLY GRILLE OR REGISTER (SG, SR)

EXHAUST, RETURN, OR TRANSFER GRILLE OR REGISTER (EG, ER, RG, RR, TG, TR)

CEILING DIFFUSERS (CD)

CEILING EXHAUST, RETURN AND TRANSFER GRILLES AND REGISTERS (EG, ER, RG, RR, TG, TR)

MITERED ELBOW WITH TURNING VANES

RADIUS ELBOW

F — FIRE DAMPER

FS — FIRE/SMOKE DAMPER

S — SMOKE DAMPER

BALANCING DAMPER

M1 — MOTORIZED DAMPER

BDD — BACKDRAFT DAMPER

D — DUCT INSPECTION DOOR (HORIZONTAL OR VERTICAL)

R — INCLINED RISE (R) OR DROP (D) ARROW IN DIRECTION OF FLOW

45 DEG BRANCH CONNECTION WITH BALANCING DAMPER

12x10 8x8 — ECCENTRIC TRANSITION

12x10 6x6 — CONCENTRIC TRANSITION

FOT — TRANSITION, FOT = FLAT ON TOP, FOB = FLAT ON BOTTOM

FLEX DUCT AND SPIN-IN CONNECTION WITH INTEGRAL BALANCING DAMPER

AIR OUT OF OPENING

AIR INTO OPENING

COMBINATION DISCONNECT AND MOTOR STARTER

WP — WEATHER PROOF COMBINATION DISCONNECT AND MOTOR STARTER

VIBRATION ISOLATOR

(200) — AIR FLOW QUANTITY: 200 SCFM

PRESSURE AND TEMPERATURE TEST PLUG

POINT OF CONNECTION, RENOVATION

POINT OF REMOVAL, DEMOLITION

AD — CEILING ACCESS DOOR

UC — PROVIDE DOOR UNDERCUT

DOOR GRILLE

N — PHOTO NUMBER AND DIRECTION IDENTIFIER

FLEXIBLE CONNECTION (FC)

FLEXIBLE DUCTWORK (SINGLE LINE)

FLEXIBLE DUCTWORK (DOUBLE LINE)

24x16 — RECTANGULAR DUCT DIMENSIONS IN INCHES FIRST DIMENSION VISIBLE SIDE

24/16 — FLAT-OVAL DUCT DIMENSIONS IN INCHES FIRST DIMENSION VISIBLE SIDE

24 DIA — ROUND DUCT DIMENSIONS IN INCHES

24x16 — INTERNAL INSULATION/SOUND ATTENUATION AS SPECIFIED. DUCT DIMENSIONS SHOWN ARE NET INSIDE, TO INSIDE FACE OF LINER. PROVIDE LINING WHERE SHOWN OR NOTED ON DWGS, AND AS DESCRIBED IN SPECIFICATIONS.

24x16 — EXISTING DUCT/EQUIPMENT TO REMAIN

24x16 — DEMOLITION – EXISTING DUCT/EQUIPMENT TO BE REMOVED

P — EXISTING EQUIPMENT, RELOCATED

X — INDICATES DUCT MOUNTED CONTROL DEVICE "X" SEE HVAC CONTROL SYMBOLS

SUPPLY OR INTAKE DUCT UP

SUPPLY OR INTAKE DUCT DOWN

RETURN OR EXHAUST DUCT UP

RETURN OR EXHAUST DUCT DOWN

EQUIPMENT NOMENCLATURE

MANUAL VALVES AND CHECK VALVES IDENTIFICATION

75–V 400
- VALVE TYPE, SEE SPECIFICATIONS
- VALVE DESIGNATION
- SIZE OF VALVE

CONTROL VALVES IDENTIFICATION

M
- ACTUATOR SYMBOL
- FLOW DIRECTION
- VALVE SYMBOL
- FLOW DIRECTION

AIR OUTLET AND INLET IDENTIFICATION

EG–2 — SPECIFICATION DESCRIPTION

(250) — AIRFLOW IN CFM

HVAC EQUIPMENT IDENTIFICATION

L–AHU–1001
- SEQUENTIAL UNIT NUMBER
- HVAC EQUIPMENT IDENTIFICATION
- BUILDING IDENTIFICATION

VALVE SYMBOLS

GATE

BUTTERFLY

GLOBE

BALL

SEATING PORT

ECCENTRIC PLUG

PLUG OR COCK

NEEDLE

SWING CHECK

BALL CHECK

B — BALANCING FITTING

F B — COMBINATION FLOWMETER AND BALANCING FITTING

F B — COMBINATION FLOWMETER, BALANCING FITTING AND SHUT-OFF VALVE

S.O.

PRESSURE RELIEF

AIR VENT (AUTO)

AIR VENT (MANUAL)

REGULATED SIDE PRESSURE CONTROL

HVAC PIPING SYMBOLS

DOUBLE LINE | SINGLE LINE

EXISTING PIPE (SCREENED)

NEW PIPE

EXISTING PIPE TO BE ABANDONED

EXISTING PIPE TO BE REMOVED

WELDED JOINT

GROOVED END JOINT

FLANGED JOINT

FLEXIBLE COUPLING

GROOVED END ADAPTER FLANGE

STEEL BELLOWS EXPANSION JOINT

ELBOW UP

ELBOW DOWN

TEE UP

TEE DOWN

LATERAL UP

CONCENTRIC REDUCER

ECCENTRIC REDUCER

UNION

ANCHOR

PIPE ALIGNMENT GUIDE

FLEXIBLE (ELASTOMER) PIPE CONNECTION

PIPING IDENTIFICATION

LPS	STEAM, LOW PRESSURE
HPS	STEAM, HIGH PRESSURE
SC	STEAM, CONDENSATE
CHS	CHILLED WATER, SUPPLY
CHR	CHILLED WATER, RETURN
HHS	HEATING HOT WATER, SUPPLY
HHR	HEATING HOT WATER, RETURN
CD	HVAC CONDENSATE DRAIN
CWS	CONDENSER WATER, SUPPLY
CWR	CONDENSER WATER, RETURN

HVAC CONTROLS SYMBOLS

MCC	DIVISION 16 MOTOR CONTROL CENTER
MS	MOTOR STARTER
M	ELECTRIC MOTOR
FZ	LOW–LIMIT FREEZE THERMOSTAT
VFD AFD	VARIABLE/ADJUSTABLE FREQUENCY DRIVE
	HVAC CONTROL PANEL (HCP)
S	SWITCH
OS	OCCUPANCY SENSOR
M M	MOTOR CONTROL VALVE (2–WAY), (3–WAY)
T T	TEMPERATURE SENSOR OR THERMOSTAT
H H	HUMIDITY SENSOR OR HUMIDISTAT
h	ENTHALPY SENSOR
FS	LIQUID FLOW SWITCH
F	DUCT MOUNTED AIRFLOW MONITORING STATION
	ANALOG OUTPUT, INPUT: DATA POINT TO DDC
	DIGITAL OUTPUT, INPUT: DATA POINT TO DDC
CS	CURRENT SENSOR
DP	DIFFERENTIAL PRESSURE SENSOR OR SWITCH
SP	STATIC PRESSURE SENSOR
I	DUCT SMOKE DETECTOR
FI	AREA SMOKE DETECTOR
M	MOTORIZED DAMPER
R	RELAY
S	SOLENOID VALVE
FACP	DIVISION 16 FIRE ALARM CONTROL PANEL
PT	LIQUID LINE PRESSURE SENSOR AND SIGNAL TRANSMITTER
FIT	LIQUID FLOW INDICATING TRANSMITTER
FCV	FLOW CONTROL VALVE
	TURBINE LIQUID FLOW METER
	VENTURI FLOW METER
+ − ±	POSITIVE, NEGATIVE, NEUTRAL ROOM PRESSURIZATION
FSC	FAN SPEED CONTROLLER
	ALARM LIGHT AND HORN STATION

DETAIL AND SECTION DESIGNATION

SECTION (LETTER) OR DETAIL (NUMERAL) DESIGNATION — A

DRAWING NUMBER (REPLACED WITH A LINE IF TAKEN AND SHOWN ON THE SAME SHEET) — V–03

DRAWING NUMBER REFERENCED (WHERE SECTION OR DETAIL IS SHOWN OR TAKEN)

HVAC GENERAL NOTES

1. THIS IS A STANDARD LEGEND SHEET. SOME SYMBOLS OR ABBREVIATIONS ON THIS SHEET MAY NOT APPEAR ON THE PLANS.
2. FOR ADDITIONAL ABBREVIATIONS OF OTHER DIVISIONS, SEE OTHER LEGENDS FOR PLUMBING, MECHANICAL, AND STRUCTURAL/ ARCHITECTURAL.

ABBREVIATIONS

ACCU	AIR COOLED CONDENSING UNIT	HTP	HEAT TRANSFER PACKAGE
ACU	AIR CONDITIONING UNIT	HVU	HEATING AND VENTILATING UNIT
AHU	AIR HANDLING UNIT	HWP	HEATING WATER PUMP
AS	CENTRIFUGAL AIR SEPARATOR	HX	HEAT EXCHANGER
BD	BALANCING DAMPER	KCCS	KENNEDY COMPLEX COMMUNICATION SYSTEM
BDD	BACKDRAFT DAMPER (GRAVITY)	MAU	MAKEUP AIR UNIT
BO	BOILER	MB	MIXING BOX
CC	COOLING COIL	MD	MOTORIZED DAMPER
CCU	CABINET CONVECTOR UNIT	ML	MOTORIZED LOUVER
CD	CEILING DIFFUSER	OA	ODOROUS AIR
CF	CEILING FAN	OAI	OUTSIDE AIR INTAKE
CFM	CUBIC FOOT PER MINUTE	OBD	OPPOSED–BLADE DAMPER (MANUAL)
CMF	CHEMICAL FEEDER	OIT	OPERATOR INTERFACE TERMINAL
CRU	CONDENSATE RETURN UNIT	OS	OCCUPANCY SENSOR
CSU	CEILING–MOUNTED AIR SUPPLY UNIT	OSA	OUTSIDE AIR
CU	CONDENSING UNIT	PCV	PRESSURE–CONTROL VALVE
CUH	CABINET UNIT HEATER	PF	PREFILTER
EA	EXHAUST AIR	PHC	PREHEAT COIL
EDH	ELECTRIC DUCT HEATER	PTAC	PACKAGED TERMINAL AIR CONDITIONING UNIT
EF	EXHAUST FAN	PTS	PITOT–TUBE TESTING STATION
EG	EXHAUST GRILLE	RA	RETURN AIR
ER	EXHAUST REGISTER	RF	RETURN FAN
ET	DIAPHRAGM EXPANSION TANK	RG	RETURN GRILLE
EUH	ELECTRIC UNIT HEATER	RL	REFRIGERANT LIQUID PIPE
FC	FLEXIBLE CONNECTION, FAIL CLOSE	RR	RETURN REGISTER
FCU	FAN–COIL UNIT	RS	REFRIGERANT SUCTION PIPE
FD	FIRE DAMPER	SCADA	SUPERVISORY CONTROL AND DATA ACQUISITION
FO	FAIL OPEN	SCFM	STANDARD CUBIC FOOT PER MINUTE
FF	FINAL FILTER	SF	SUPPLY FAN
FRP	FIBERGLASS REINFORCED PLASTIC	SG	SUPPLY GRILLE
FSD	FIRE SMOKE DAMPER	SP	STATIC PRESSURE
FT	FINNED–TUBE BASEBOARD HEATER	SR	SUPPLY REGISTER
FZ	FREEZE STAT	TU	TERMINAL UNIT
HC	HEATING COIL	UH	UNIT HEATER
HCP	HVAC CONTROL PANEL		
HD	HOOD, EXHAUST		
HGR	HOT GLYCOL RETURN		
HGS	HOT GLYCOL SUPPLY		

THIS SPACE RESERVED

SYM	ZONE	DESCRIPTION	DATE	APPROVED
A		ADDED SHEET– INITIAL RELEASE TO ERL	12/05/11	KM

REVISIONS

THIS DRAWING CREATED IN AUTOCAD 2010 FILE FORMAT AND WILL BE REVISED ONLY ON AN AUTOCAD SYSTEM. FILE: 14000189–DP5–H01.DWG

JONES EDMUNDS
730 NE WALDO ROAD, GAINESVILLE, FLORIDA 32641 / (352) 377-5821
3910 S WASHINGTON AVE, SUITE 210, TITUSVILLE, FLORIDA 32780 / (321) 269-2950

SIGNATURES	DATE
DRAWN J. ALLEN	12/05/11
CHECKED M. CLARK	12/05/11
SUBMITTED D. FITZGERALD	12/05/11
ST of LICENSURE: FL LICENSE NO: 40976	
APPROVED M. CLARK	12/15/11
S. HUNT	12/09/11

NATIONAL AERONAUTICS AND SPACE ADMINISTRATION
JOHN F. KENNEDY SPACE CENTER, NASA
KENNEDY SPACE CENTER, FLORIDA

REVITALIZE WATER & WASTEWATER SYSTEMS - VOLUME 5 OF 5
W1 PUMP STATION REPLACEMENT
HVAC LEGEND SHEET

FILE NO.	SIZE	DWG. NO.	REV
	F	79K38877 VOL 5	A
PROJ. NO. 96968.3		SHEET 54	

H1

D. P. FITZGERALD, INC.
Water & Wastewater Treatment
Process Controls
Alachua, Florida COA 8991

NOTICE: When Government drawings, specifications, or other data are used for any purpose other than in connection with a definitely related Government procurement operation, the United States Government thereby incurs no responsibility nor obligation whatsoever; and the fact that the Government may have formulated, furnished, or in any way supplied the said drawings, specifications or other data is not to be regarded by implication or otherwise as in any manner licensing the holder or any other person or corporation, or conveying any rights or permission to manufacture, use, or sell any patented invention that may in any way be related thereto.

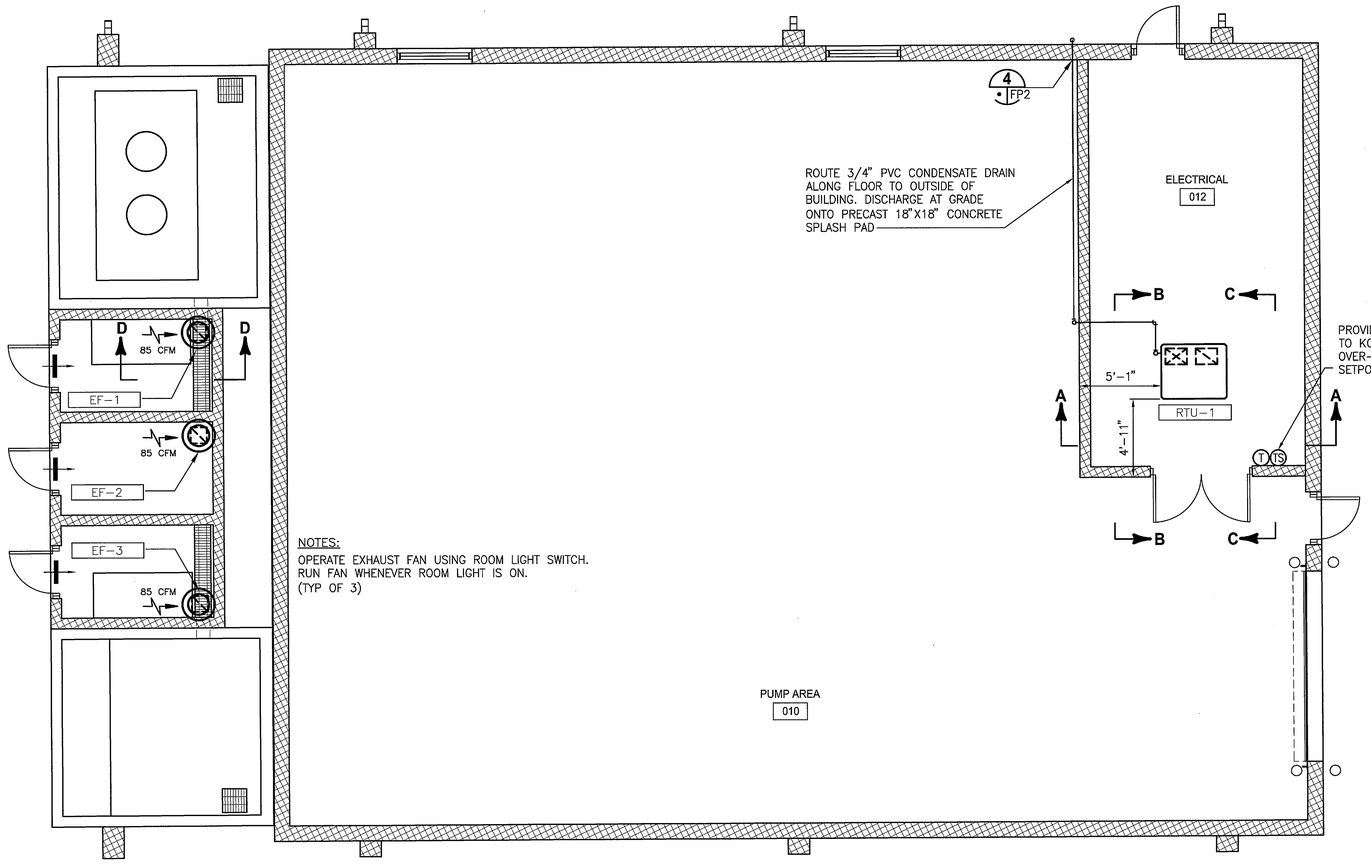

HVAC LAYOUT
1/4" = 1'-0"

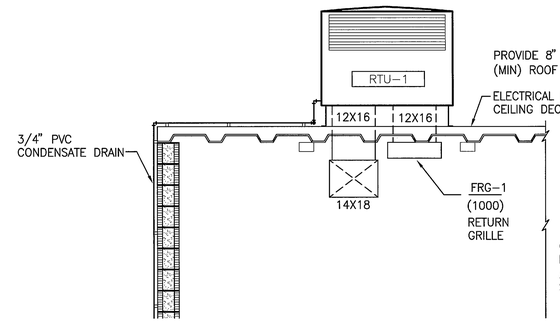

SECTION A-A
1/2" = 1'-0"

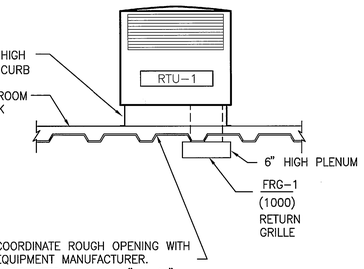

SECTION C-C
1/2" = 1'-0"

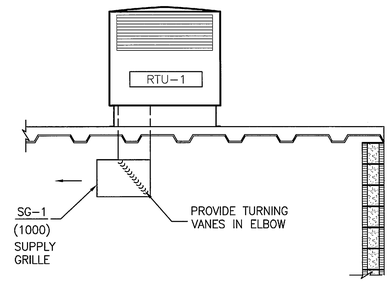

SECTION B-B
1/2" = 1'-0"

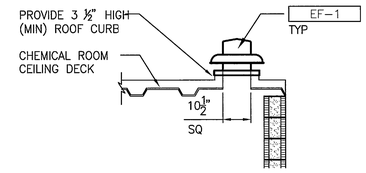

SECTION D-D
1/2" = 1'-0"

GRAPHIC SCALE 0 1 2 4 8
SCALE IN FEET 1/4"=1'-0"

GRAPHIC SCALE 0 1 2 4
SCALE IN FEET 1/2"=1'-0"

UNITARY AIR CONDITIONER SCHEDULE

MARK	LOCATION	# ZONES	FAN SECTION: SUPPLY AIR (CFM)	OUT DOOR AIR (CFM)	E.S.P (IN W.C)	MOTOR HP	FAN SPEED RPM	FILTER	COOLING MODE: CAPACITY MBH: TOTAL	SENSIBLE	AIR TEMP (DEG F): ENTER D.B.	ENTER W.B.	LEAVE D.B.	LEAVE W.B.	O.A. TEMP (DEG F)	NOM. TONS	MCA	MCOP	ELECTRICAL (V/P/HZ)	REFRIG TYPE	SEER	DESIGN BASIS	NOTES
RTU-1	ELECTRICAL BLDG	1	1,000	0	0.5	1/2	1,080	1" DISP	28.0	21.0	80	67.0	60.0	58.0	95	2.33	21.7	35	208/1/60	R410A	13	TRANE 4TCC3030A	1, 2, 3, 4, 5, 6

NOTES:
1. ALL EQUIPMENT SHALL HAVE SINGLE POINT ELECTRIC CONNECTIONS
2. EXTERNAL STATIC PRESSURE INCLUDES LOSSES FROM DIFFUSERS, REGISTERS, DUCTWORK, AND DAMPERS ONLY.
3. PROVIDE 8-INCH HIGH (MIN) ROOF CURB
4. COORDINATE WITH STRUCTURAL FOR CEILING-SLAB PENETRATION
5. EQUIPMENT SHALL BE AS LISTED UNDER 'DESIGN BASIS' OR APPROVED EQUAL
6. PROVIDE UNIT WITH HINGED FILTER ACCESS DOOR

FAN SCHEDULE

MARK	LOCATION	SERVICE	TYPE	CONSTRUCTION	FLOW (CFM)	FAN RPM	ESP (IN. W.G.)	DISCONNECT	DRIVE	MOTOR: HP	RPM	V/PH/HZ	MAX SONES	DESIGN BASIS	NOTES
EF-1	HYPOCHLORITE FEED RM	CHEM FEED AREA	CENTRIFUGAL EXHAUST	SPUN ALUMINUM	85	830	0.25	BY DIV 26	DIRECT	1/8	860	120/1/60	2.5	GREENHECK G	1, 2, 3, 4, 5
EF-2	FUTURE FEED RM	CHEM FEED AREA	CENTRIFUGAL EXHAUST	SPUN ALUMINUM	85	830	0.25	BY DIV 26	DIRECT	1/8	860	120/1/60	2.5	GREENHECK G	1, 2, 3, 4, 5
EF-3	AMMONIA FEED RM	CHEM FEED AREA	CENTRIFUGAL EXHAUST	SPUN ALUMINUM	85	830	0.25	BY DIV 26	DIRECT	1/8	860	120/1/60	2.5	GREENHECK G	1, 2, 3, 4, 5

NOTES:
1. FAN IS A PACKAGED UNIT COMPLETE WITH HOUSING, STAINLESS STEEL INSECT SCREEN, BACKDRAFT DAMPER, AND CORROSION RESISTANT FASTENERS.
2. PROVIDE FACTORY-APPLIED PHENOLIC EPOXY POWDER FINISH TO FAN AND DAMPER
3. PROVIDE VIBRATION ISOLATORS
4. PROVIDE FAN SPEED CONTROLLERS
5. WITH PLUG DISCONNECT

AIR TERMINAL DEVICE SCHEDULE

MARK	NOM FACE DIM	MOUNTING	MATERIAL	FINISH	MAX NC	DEFLECTION	DESIGN BASIS	NOTES
SG-1	18 X 14	SURFACE	STEEL	WHITE	30	DOUBLE	PRICE 520	1,2
FRG-1	18 X 18	SURFACE	STEEL	WHITE	20	NONE	PRICE 530FF	1,3

NOTES:
1. EQUIPMENT SHALL BE AS LISTED UNDER 'BASIS OF DESIGN' OR APPROVED EQUAL.
2. PROVIDE ADJUSTMENT IN BOTH VERTICAL AND HORIZONTAL DIRECTIONS
3. PROVIDE RETURN GRILLE USING STANDARD SIZE, 1-INCH THICK FILTERS

D. P. FITZGERALD, INC.
Water & Wastewater Treatment
Process Controls
Alachua, Florida COA 8991

THIS SPACE RESERVED

SYM	ZONE	DESCRIPTION	DATE	APPROVED
A		ADDED SHEET- INITIAL RELEASE TO EDL	12/05/11	KW

REVISIONS

THIS DRAWING CREATED IN AUTOCAD 2010 FILE FORMAT AND WILL BE REVISED ONLY ON AN AUTOCAD SYSTEM. FILE: 14000189-DP5-H02.DWG

JONES EDMUNDS
730 NE WALDO ROAD, GAINESVILLE, FLORIDA 32641 / (352) 377-5821
3910 S WASHINGTON AVE, SUITE 210, TITUSVILLE, FLORIDA 32780 / (321) 269-2950

SIGNATURES	DATE
DRAWN J. ALLEN	12/05/11
CHECKED M. CLARK	12/05/11
SUBMITTED D. FITZGERALD	12/05/11
ST of LICENSURE: FL LICENSE NO: 40976	
APPROVED M. CLARK	12/5/11
S. HUNT	12/09/11

NATIONAL AERONAUTICS AND SPACE ADMINISTRATION
JOHN F. KENNEDY SPACE CENTER, NASA
KENNEDY SPACE CENTER, FLORIDA

REVITALIZE WATER & WASTEWATER SYSTEMS - VOLUME 5 OF 5
W1 PUMP STATION REPLACEMENT
HVAC PLAN AND SCHEDULES

FILE NO.	SIZE	DWG. NO.	REV
	F	79K38877 VOL 5	A
PROJ. NO. 96968.3		SHEET 55	

H2

NOTICE: When Government drawings, specifications, or other data are used for any purpose other than in connection with a definitely related Government procurement operation, the United States Government thereby incurs no responsibility nor obligation whatsoever; and the fact that the Government may have formulated, furnished, or in any way supplied the said drawings, specifications or other data is not to be regarded by implication or otherwise as in any manner licensing the holder or any other person or corporation, or conveying any rights or permission to manufacture, use, or sell any patented invention that may in any way be related thereto.

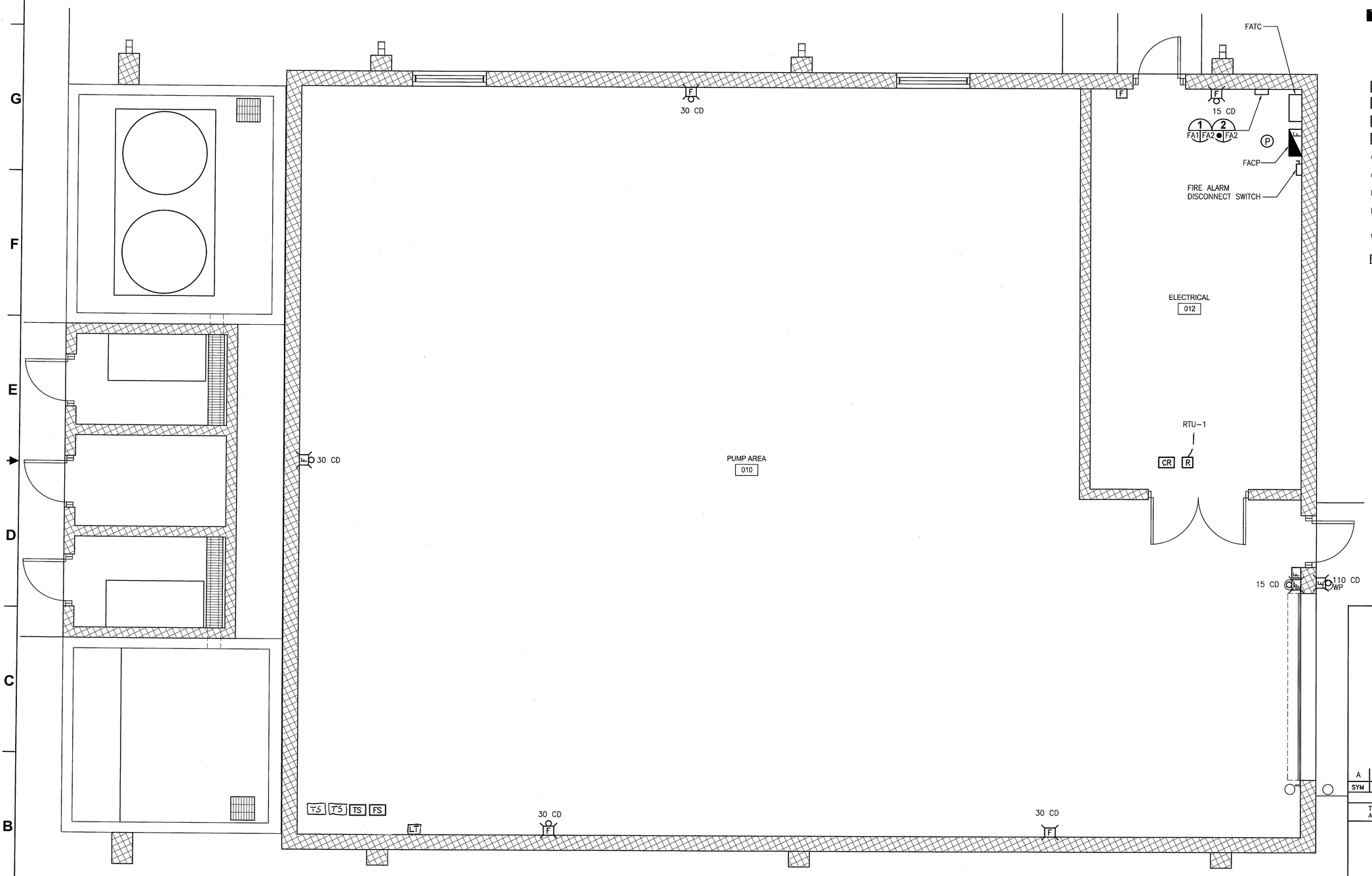

FIRE ALARM LEGEND

F	COMBINATION FIRE BELL/STROBE
F	FIRE ALARM STROBE LIGHT
F	FIRE ALARM BELL
F	FIRE ALARM CONTROL PANEL (FACP)
F	MANUAL PULL STATION
P	PHOTOELECTRIC SMOKE DETECTOR
R	RELAY
TS	TAMPER SWITCH
FS	WATER FLOW PRESSURE SWITCH
MZ	FIRE ALARM MONITOR ZAM
CR	FIRE ALARM CONTROL MODULE
CRMS	CENTRAL RADIO MONITORING SYSTEM
CD	CANDELA
FATC	FIRE ALARM TERMINAL CABINET
FACP	NON–ADDRESSABLE FIRE ALARM CONTROL PANEL. SIMPLEX 4005 OR APPROVED EQUAL
WP	WEATHER PROOF
LT	LOW TEMPERATURE INDICATOR, POTTER RTS-O, OR APPROVED EQUAL

W-1 PUMP STATION BUILDING FIRE ALARM PLAN

3/8" = 1'–0"

GRAPHIC SCALE

0 1 2 4

SCALE IN FEET
3/8" = 1'–0"

FA1

THIS SPACE RESERVED

SYM	ZONE	DESCRIPTION	DATE	APPROVED
A		ADDED SHEET- INITIAL RELEASE TO EDC	12/05/11	

REVISIONS

THIS DRAWING CREATED IN AUTOCAD 2010 FILE FORMAT AND WILL BE REVISED ONLY ON AN AUTOCAD SYSTEM. FILE: 14000189–DP5–FA1.DWG

JONES EDMUNDS
730 NE WALDO ROAD, GAINESVILLE, FLORIDA 32641 / (352) 377-5821
3910 S WASHINGTON AVE, SUITE 210, TITUSVILLE, FLORIDA 32780 / (321) 269-2950

SIGNATURES	DATE
DRAWN J.ALLEN	12/05/11
CHECKED L. MILLER	12/05/11
SUBMITTED M. CLARK	12/05/11
ST of LICENSURE: FL LICENSE NO: 48898	
APPROVED M. CLARK	12/5/11
N. COLVIN	12/5/11

NATIONAL AERONAUTICS AND SPACE ADMINISTRATION
JOHN F. KENNEDY SPACE CENTER, NASA
KENNEDY SPACE CENTER, FLORIDA

REVITALIZE WATER & WASTEWATER SYSTEMS - VOLUME 5 OF 5
W1 PUMP STATION REPLACEMENT

FIRE ALARM SYSTEM PLAN

FILE NO.	SIZE	DWG. NO.	REV
	F	79K38877 VOL 5	A

PROJ. NO. 96968.3 | SHEET 56

NOTICE: When Government drawings, specifications, or other data are used for any purpose other than in connection with a definitely related Government procurement operation, the United States Government thereby incurs no responsibility nor obligation whatsoever; and the fact that the Government may have formulated, furnished, or in any way supplied the said drawings, specifications or other data is not to be regarded by implication or otherwise as in any manner licensing the holder or any other person or corporation, or conveying any rights or permission to manufacture, use, or sell any patented invention that may in any way be related thereto.

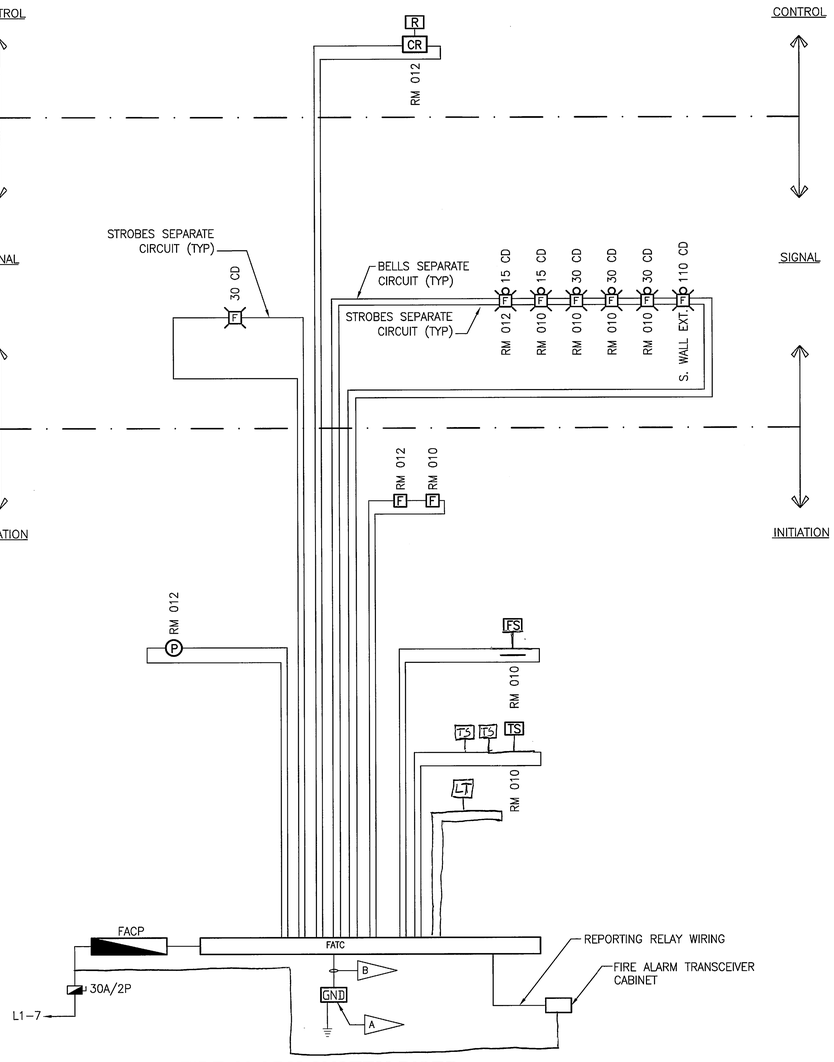

FIRE ALARM SYSTEM RISER

NTS

FIRE ALARM OPERATIONS MATRIX W-1 PUMP STATION BUILDING

FACP INPUTS \ FACP OUTPUTS	FACP AUDIBLE ALARM SIGNAL ACTIVATED	FACP ALARM REPORTING TO CRMS	FACP AUDIBLE TROUBLE SIGNAL ACTIVATED	FACP TROUBLE REPORTING TO CRMS	FACP AUDIBLE SUPERVISORY SIGNAL ACTIVATED	FACP SUPERVISORY REPORTING TO CRMS	FACP LCD ALARM MESSAGE DISPLAYED	ALL STROBES OPERATE	ALL BELLS OPERATE
MANUAL PULL STATIONS	X	X					X	X	X
TAMPER SWITCH SUPPRESSION SYSTEM					X	X	X		
FLOW SWITCH SUPPRESSION SYSTEM	X	X					X	X	X
FIRE ALARM AC POWER FAILURE			X	X			X		
FIRE ALARM SYSTEM LOW BATTERY			X	X			X		
OPEN CICRUIT			X	X			X		
GROUND FAULT			X	X			X		
LOW TEMPERATURE INDICATOR					X	X	X		

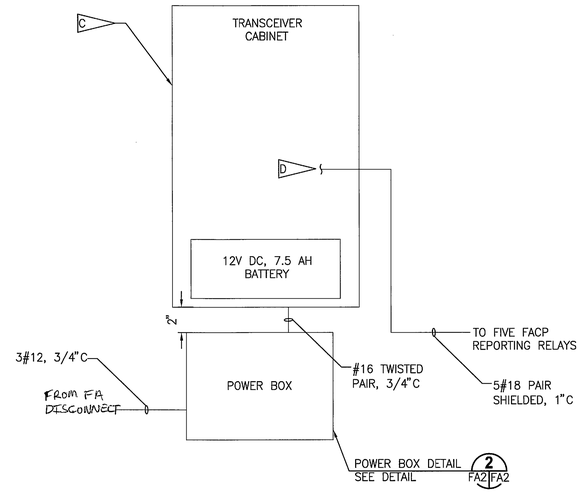

FIRE ALARM RADIO TRANSCEIVER DETAIL 1

NTS

FA1 FA2

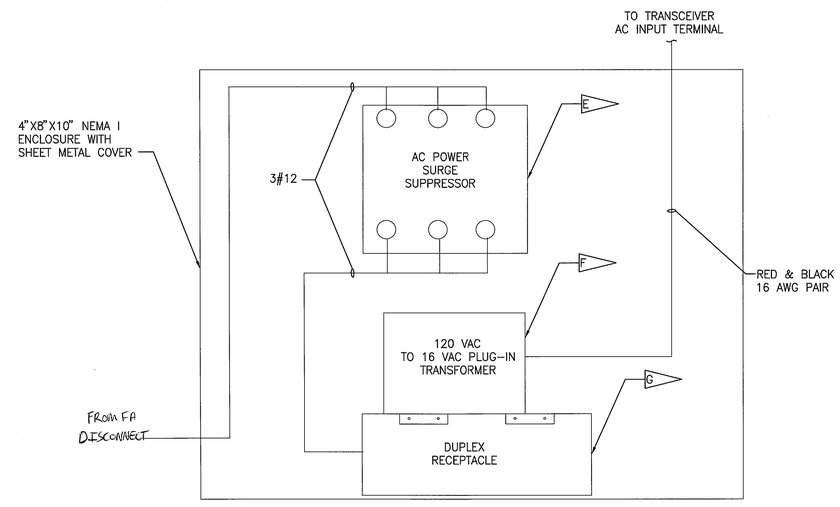

POWER BOX DETAIL 2

NTS

FA2

NOTES:

A. GROUND BAR IN ELECTRICAL ROOM.

B. (1) #6G TO BUILDING ELECTRICAL GROUND SYSTEM.

C. PROVIDE AND INSTALL AES MODEL # KSC 7788F (FREQUENCY 166.8375, 5 WATT) FIRE TRANSCEIVER W/ EMERGENCY BACK-UP BATTERY AND RED ENCLOSURE, MOUNT 5' AFF. FURNISH AND INSTALL ANTENNA, METZ MODEL #217.

D. PROVIDE SLACK CABLE FOR FUTURE CONNECTION TO TRANSCEIVER INPUT TERMINALS.

E. PROVIDE SQUARE D SURGE SUPPRESSOR OR APPROVED EQUAL PARALLEL WIRED TO DISCONNECT.

F. PROVIDE AES MODEL # KSC 1460.

G. PROVIDE DUPLEX RECEPTACLE IN SURFACE BOX. MOUNT TO BOTTOM OF POWER BOX.

H. EACH FIRE ALARM SIGNAL CIRCUIT SHALL HAVE 25% ADDITIONAL CAPACITY TO ACCOMMODATE FUTURE MODIFICATIONS.

J. SEPARATE SIGNALS SHALL BE SENT OUT TO CENTRAL FIRE FOR SPRINKLER DEVICES AND SEPARATE SIGNALS FOR INITIATION DEVICES.

K. REPORTING RADIO WITH ZONES CONNECTED TO THE FACP RELAYS PROGRAMMED AS FOLLOWS:

RADIO ZONE 1 – W-1 PUMP STATION BUILDING MPS/FIRE ALARM
RADIO ZONE 2 – W-1 PUMP STATION BUILDING FACP SUPERVISORY
RADIO ZONE 3 – W-1 PUMP STATION BUILDING FACP TROUBLE
RADIO ZONE 4 – W-1 PUMP STATION BUILDING WATERFLOW
RADIO ZONE 5 – W-1 PUMP STATION BUILDING SMOKE DETECTOR
RADIO ZONE 6 – W-1 PUMP STATION BUILDING LOW TEMP
RADIO ZONE 7 – SPARE
RADIO ZONE 8 – SPARE

THIS SPACE RESERVED

SYM	ZONE	DESCRIPTION	DATE	APPROVED
A		ADDED SHEET- INITIAL RELEASE TO EDC	12/05/11	

REVISIONS

THIS DRAWING CREATED IN AUTOCAD 2010 FILE FORMAT AND WILL BE REVISED ONLY ON AN AUTOCAD SYSTEM. FILE: 14000189-DP5-FA2.DWG

JONES EDMUNDS
730 NE WALDO ROAD, GAINESVILLE, FLORIDA 32641 / (352) 377-5821
3910 S WASHINGTON AVE, SUITE 210, TITUSVILLE, FLORIDA 32780 / (321) 269-2950

SIGNATURES	DATE
DRAWN J.ALLEN	12/05/11
CHECKED L. MILLER	12/05/11
SUBMITTED M. CLARK	12/05/11
ST of LICENSURE: FL LICENSE NO: 48898	
APPROVED M. CLARK	12/5/11
N. COLVIN	12/9/11

NATIONAL AERONAUTICS AND SPACE ADMINISTRATION
JOHN F. KENNEDY SPACE CENTER, NASA
KENNEDY SPACE CENTER, FLORIDA

REVITALIZE WATER & WASTEWATER SYSTEMS - VOLUME 5 OF 5
W1 PUMP STATION REPLACEMENT

FIRE ALARM RISER DIAGRAM

FILE NO.	SIZE	DWG. NO.	REV
	F	79K38877 VOL 5	A

PROJ. NO. 96968.3 SHEET 57

NOTICE: When Government drawings, specifications, or other data are used for any purpose other than in connection with a definitely related Government procurement operation, the United States Government thereby incurs no responsibility nor obligation whatsoever; and the fact that the Government may have formulated, furnished, or in any way supplied the said drawings, specifications or other data is not to be regarded by implication or otherwise as in any manner licensing the holder or any other person or corporation, or conveying any rights or permission to manufacture, use, or sell any patented invention that may in any way be related thereto.

FIRE PROTECTION GENERAL NOTES

1. INSTALL SYSTEM IN ACCORDANCE WITH NFPA 13 & 24 AND THE REQUIREMENTS OF THE LOCAL AUTHORITY HAVING JURISDICTION EXCEPT AS MODIFIED HEREIN FOR REQUIREMENTS TO MEET NASA AND KSC STD 8719.11. MATERIALS SHALL BE FM/UL LISTED FOR USE IN FIRE PROTECTION SYSTEMS.

2. HANGER LOCATIONS SHALL BE COORDINATED WITH THE BUILDING STRUCTURAL STEEL. SUPPORT PIPING IN ACCORDANCE WITH NFPA-13, PROVIDE ALL MISCELLANEOUS STEEL FRAMING AS REQUIRED TO SUPPORT PIPING FROM STRUCTURE.

3. SPRINKLERS SHALL BE FROM A SINGLE MANUFACTURER.

4. ALL MEASUREMENTS AND ELEVATIONS SHALL BE ESTABLISHED BY THE CONTRACTOR PRIOR TO FABRICATION OF PIPE AND COORDINATED WITH THE BUILDING STRUCTURE, DUCTWORK SHOP DRAWINGS AND THE WORK OF OTHER TRADES. PROVIDE OFFSETS WHERE REQUIRED DUE TO OBSTRUCTIONS OR INTERFERENCE AT NO ADDITIONAL COST TO THE CONTRACTING OFFICER.

5. THE CONTRACTOR SHALL PREPARE FABRICATION / WORKING PLANS AS DEFINED BY NFPA-13 WHICH CLEARLY INDICATE ALL CUT PIPE DIMENSIONS, HANGER TYPES AND LOCATIONS, ANY TRAPPED SECTIONS OF PIPING, AND DEVIATIONS FROM THIS LAYOUT REQUIRED FOR COORDINATION. PROVIDE AUXILIARY DRAINS FOR ANY TRAPPED PIPING.

6. TIE-IN OF FLOW SWITCH AND TAMPER SWITCHES TO FIRE ALARM SYSTEM SHALL BE PERFORMED UNDER DIVISION 28.

7. ALL SPRINKLER PIPING SHALL BE PAINTED RED, WITH TWO COATS OF PAINT.

8. SEE CIVIL DRAWINGS FOR SITE PIPING.

9. TEST SYSTEMS IN ACCORDANCE WITH NFPA-13 AND 24 AND REQUIREMENTS OF AHJ AND PREPARE "CONTRACTORS MATERIAL AND TEST CERTIFICATE" AS PRESCRIBED BY NFPA-13 AND NFPA-24.

10. ALL PIPE SIZES ARE INDUSTRY STANDARD PIPE DESIGNATED BY THEIR NOMINAL DIAMETER IN ACCORD WITH ASTM A53 OR ASTM A135.

11. PIPE SIZES INDICATED ARE THE MINIMUM ALLOWABLE. ACTUAL SIZES TO BE BASED UPON HYDRAULIC CALCULATIONS.

12. PIPING PENETRATIONS OF FIRE RATED WALLS SHALL BE PROTECTED TO MAINTAIN THE INTEGRITY OF THE FIRE RATING. REFER TO ARCHITECTURAL SHEETS FOR RATED WALLS.

13. PROVIDE PLACARD AT EACH RISER INDICATING DESIGN CONDITIONS PER NFPA-13.

14. COORDINATE SPRINKLER HEAD LOCATIONS WITH ARCHITECTURAL, MECHANICAL AND ELECTRICAL CEILING DEVICES AND PLANS.

WATER FLOW DATA

DATE TAKEN	STATIC PRESSURE (PSIG)	FLOW (GPM)	RESIDUAL PRESSURE (PSIG)	DATA PROVIDED BY	TEST HYDRANT	FLOW HYDRANT
12-08-2011	54	949	50	URS FIRE PROTECTION	WPFH 1150	IDFH1340

FIRE PROTECTION LEGEND

	PIPING
	CHECK VALVE
	DOUBLE CHECK VALVE BACKFLOW PREVENTER
	ANGLE VALVE
	FLANGED OR GROOVED CONNECTION
	PRESSURE GAUGE WITH COCK
TS	OS&Y VALVE WITH TAMPER SWITCH
	EASY RISER SWING CHECK WITH INTEGRAL MAIN DRAIN AND PRESSURE GAUGE TAPPINGS
	REDUCER
	COVERAGE AREA FOR FIRE SPRINKLER SYSTEM

FIRE PROTECTION ABBREVIATIONS

AHJ	AUTHORITY HAVING JURISDICTION
ASTM	AMERICAN SOCIETY FOR TESTING AND MATERIALS
CAP	CAPACITY
CLDI	CONCRETE LINED DUCTILE IRON
DI	DUCTILE IRON
F	FAHRENHEIT
FDC	FIRE DEPARTMENT CONNECTION
FDV	FIRE DEPARTMENT VALVE
FH	FIRE HYDRANT
FM	FACTORY MUTUAL
GPM	GALLONS PER MINUTE
IN	INCHES
IPS	INTERNAL PIPE SIZE
KSC	KENNEDY SPACE CENTER
NFPA	NATIONAL FIRE PROTECTION ASSOCIATION
NPT	NATIONAL PIPE THREAD
OS&Y	OUTSIDE SCREW AND YOKE
PSI	POUNDS PER SQUARE INCH
PSIG	POUNDS PER SQUARE INCH GAUGE
SPDT	SINGLE POLE DOUBLE THROW
SPKR	SPRINKLER
STD	STANDARD
UL	UNDERWRITERS LABORATORY

WATER SUPPY REQUIREMENTS

BUILDING	CLASSIFICATION OF OCCUPANCY (1)	FLOW REQUIREMENTS	MINIMUM RESIDUAL PRESSURE REQUIRED (PSI)	ESTIMATED FLOW AT BASE OF RISER (GPM)	REMOTE AREA OF COVERAGE (SF)	DURATION (MIN)	OUTSIDE HOSE STREAM (MIN)
MAINTENANCE BUILDING	ORDINARY, GROUP 2	0.2 GPM/SF	52.4	654.5	1500	60	250

NOTES:
1 OCCUPANCY CLASSIFICATION PER KSC AHJ.

NOTE:
* TO BE PROVIDED

THIS SPACE RESERVED

SYM	ZONE	DESCRIPTION	DATE	APPROVED
A		ADDED SHEET - INITIAL RELEASE TO EDC	12/05/11	KAM

REVISIONS

THIS DRAWING CREATED IN AUTOCAD 2010 FILE FORMAT AND WILL BE REVISED ONLY ON AN AUTOCAD SYSTEM. FILE: 14000189-DP5-FP01.DWG

JONES EDMUNDS
730 NE WALDO ROAD, GAINESVILLE, FLORIDA 32641 / (352) 377-5821
3910 S WASHINGTON AVE, SUITE 210, TITUSVILLE, FLORIDA 32780 / (321) 269-2950

SIGNATURES	DATE
DRAWN S. HAFERKAMP	12/05/11
CHECKED W. LEANHARDT	12/05/11
SUBMITTED C. BAGGETT	12/05/11
ST of LICENSURE: FL LICENSE NO: 56047	
APPROVED M. CLARK	12/5/11
N. COLVIN	

NATIONAL AERONAUTICS AND SPACE ADMINISTRATION
JOHN F. KENNEDY SPACE CENTER, NASA
KENNEDY SPACE CENTER, FLORIDA

REVITALIZE WATER & WASTEWATER SYSTEMS - VOLUME 5 OF 5
W1 PUMP STATION REPLACEMENT

FIRE PROTECTION LEGEND AND NOTES

FILE NO.	SIZE	DWG. NO.	REV
	F	79K38877 VOL 5	A
PROJ. NO. 96968.3		SHEET 58	

FP1

KSC FORM 1-11 (3/76)(C/G 3/94)

NOTICE: When Government drawings, specifications, or other data are used for any purpose other than in connection with a definitely related Government procurement operation, the United States Government thereby incurs no responsibility nor obligation whatsoever; and the fact that the Government may have formulated, furnished, or in any way supplied the said drawings, specifications or other data is not to be regarded by implication or otherwise as in any manner licensing the holder or any other person or corporation, or conveying any rights or permission to manufacture, use, or sell any patented invention that may in any way be related thereto.

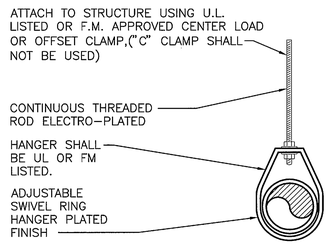

NOTE: FOR PIPE 2" AND SMALLER

SWIVEL LOOP PIPE HANGER DETAIL (1) FP3 FP2

NTS

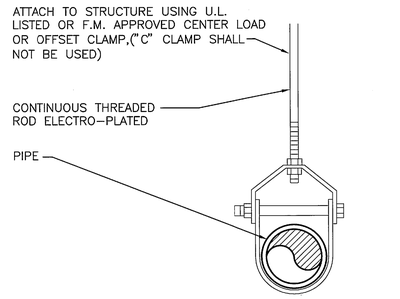

NOTE: FOR PIPE 2½" AND LARGER

CLEVIS PIPE HANGER DETAIL (2) FP3 FP2

NTS

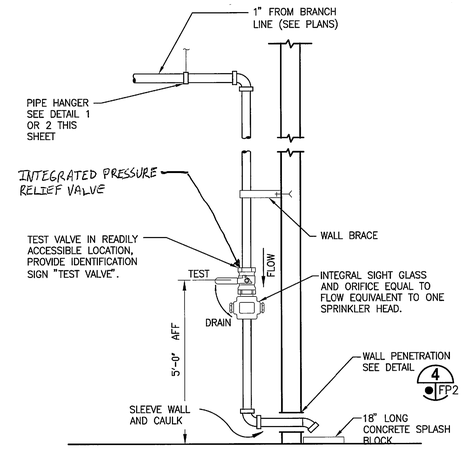

INSPECTOR'S TEST CONNECTION (3) FP3 FP2

NTS

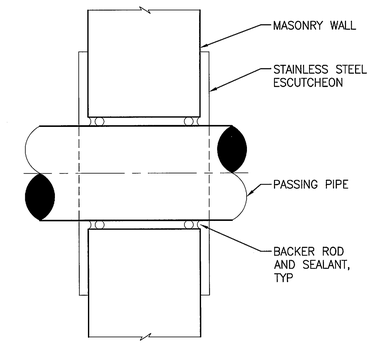

WALL PENETRATION DETAIL (4) FP2

NTS

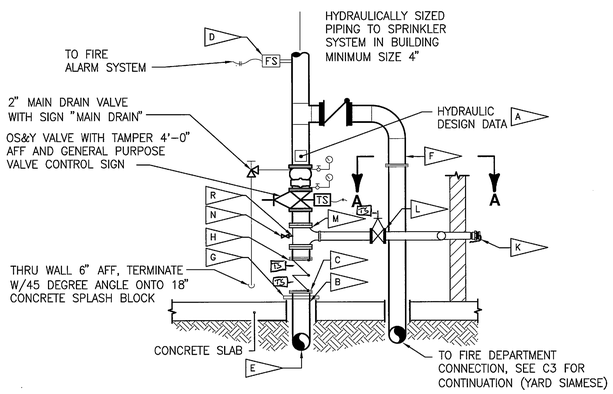

PLAN

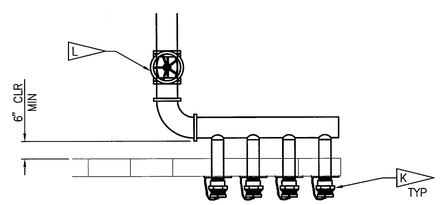

SECTION A-A

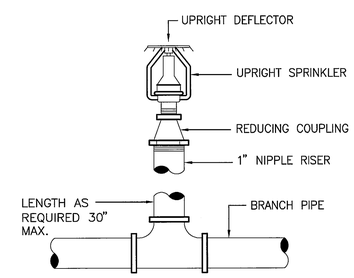

UPRIGHT SPRINKLER HEAD DETAIL (6) FP3 FP2

NTS

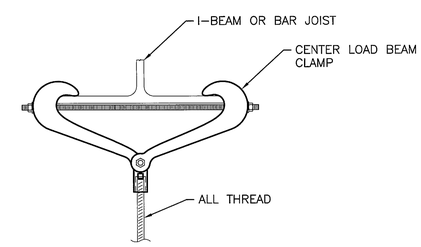

BEAM CLAMP DETAIL (7) FP3 FP2

NTS

- A — IDENTIFICATION SIGNS SHALL BE OF STEEL CONSTRUCTION WITH DIE PUNCHED LETTERING INCLUDING THE HYDRAULIC PLACARD. SEE GENERAL NOTE 13.
- B — SLEEVE AND CAULK FLOOR PENETRATIONS.
- C — PROVIDE COMPATIBLE FLANGE BETWEEN RISER PIPING AND UNDERGROUND PIPING.
- D — FLOW SWITCH WITH RETARD AND TWO SPDT SWICTHES.
- E — SEE SHEET C3 FOR CONTINUATION.
- F — 4" TO FIRE DEPARTMENT YARD SIAMESE.
- G — PROVIDE RISER CLAMP AT FLOOR SURFACE. CLAMP SHALL BE MSS-SP-69-#8 OR EQUAL.
- H — VERTICALLY MOUNTED 6" DOUBLE CHECK VALVE BACK FLOW PREVENTER FOR FIRE SERVICE CONNECTION.
- J — NOT USED.
- K — WALL MOUNTED TEST OUTLET CONNNETION – POTTER ROETIER MODEL NO. 5864 OR APPROVED EQUAL. PROVIDE BRONZE PLAQUE READING "FORWARD FLOW TEST CONNECTION"
- L — OS&Y VALVE
- M — TEE FOR TEST OUTLET CONNECTION
- N — WATTS 1/4" FR-500 FREEZE PROTECTION VALVE OR APPROVED EQUAL
- R — 1/2" NPT TAP WITH 1/2"x1/4" BUSHING
- S. — DISCHARGE MANIFOLD MAY BE MOUNTED VERTICALLY. COORDINATE WITH SIAMESE FITTING, DOMESTIC WATER RISER, ETC. PROVIDE DRAIN VALVE.

WET PIPE SYSTEM - ALARM VALVE RISER (5) FP3 FP2

NTS

THIS SPACE RESERVED

SYM	ZONE	DESCRIPTION	DATE	APPROVED
A		ADDED SHEET-INITIAL RELEASE TO EDC	12/05/11	

REVISIONS

THIS DRAWING CREATED IN AUTOCAD 2010 FILE FORMAT AND WILL BE REVISED ONLY ON AN AUTOCAD SYSTEM. FILE: 14000189-DP5-FP02.DWG

JONES EDMUNDS
730 NE WALDO ROAD, GAINESVILLE, FLORIDA 32641 / (352) 377-5821
3910 S WASHINGTON AVE, SUITE 210, TITUSVILLE, FLORIDA 32780 / (321) 269-2950

SIGNATURES	DATE
DRAWN S. HAFERKAMP	12/05/11
CHECKED W. LEANHARDT	12/05/11
SUBMITTED C. BAGGETT	12/05/11
ST of LICENSURE: FL LICENSE NO: 56047	
APPROVED M. CLARK	12/15/11
N. COLVIN	12/14/11

NATIONAL AERONAUTICS AND SPACE ADMINISTRATION
JOHN F. KENNEDY SPACE CENTER, NASA
KENNEDY SPACE CENTER, FLORIDA

REVITALIZE WATER & WASTEWATER SYSTEMS - VOLUME 5 OF 5
W1 PUMP STATION REPLACEMENT

FIRE PROTECTION DETAILS

FILE NO.	SIZE	DWG. NO.	REV
	F	79K38877 VOL 5	A

PROJ. NO. 96968.3 | SHEET 59

FP2

NOTICE: When Government drawings, specifications, or other data are used for any purpose other than in connection with a definitely related Government procurement operation, the United States Government thereby incurs no responsibility nor obligation whatsoever; and the fact that the Government may have formulated, furnished, or in any way supplied the said drawings, specifications or other data is not to be regarded by implication or otherwise as in any manner licensing the holder or any other person or corporation, or conveying any rights or permission to manufacture, use, or sell any patented invention that may in any way be related thereto.

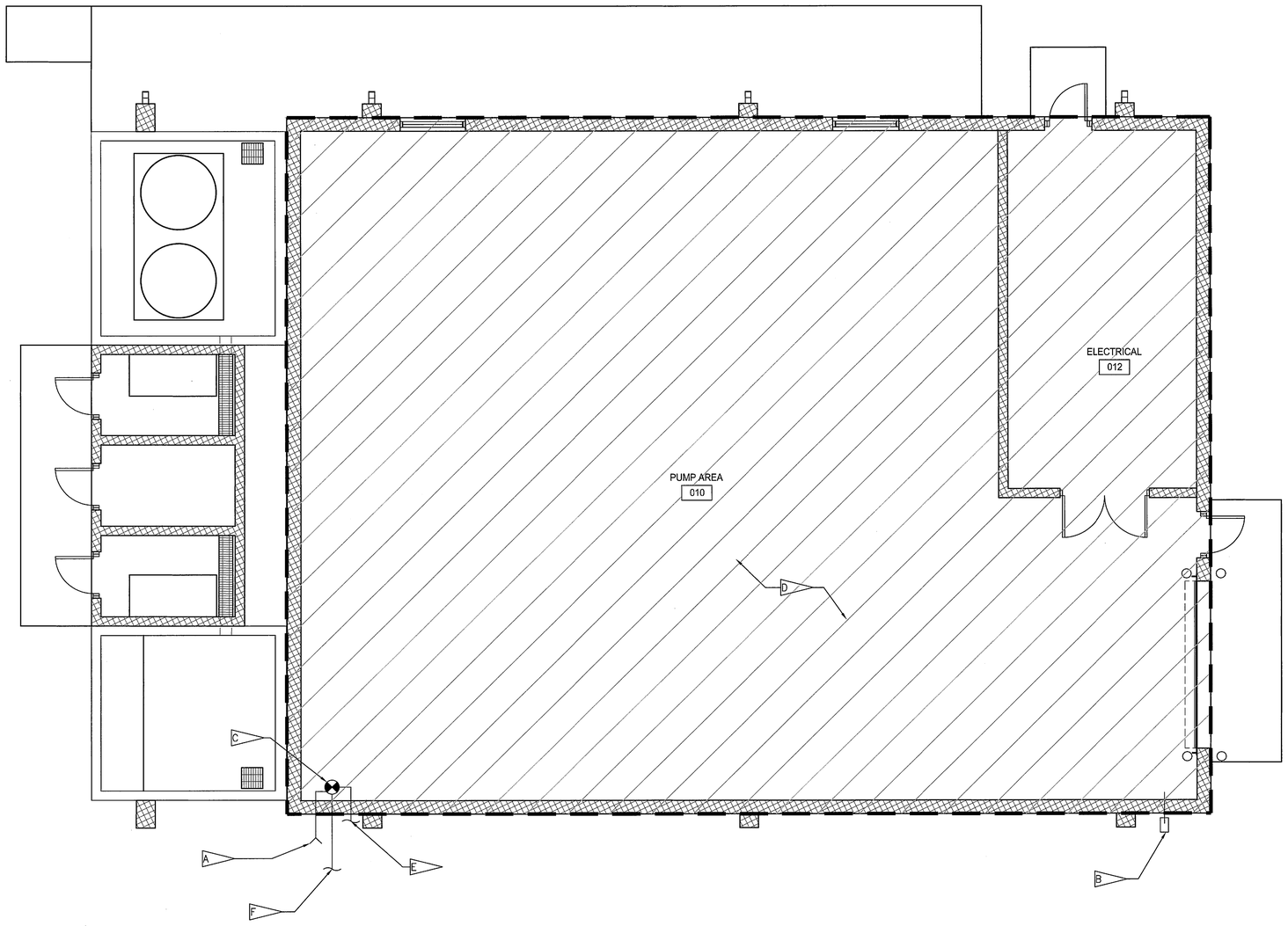

PROTECTION PLAN

1/4" = 1'-0"

NOTES:

A — PROVIDE RISER DRAIN.

B — PROVIDE INSPECTORS TEST CONNECTION. SEE DETAIL 3 FP3|FP2

C — PROPOSED SPRINKLER RISER LOCATION. LOCATE RISER MINIMUM 18" AWAY FROM ADJACENT WALL BEHIND RISER. SEE DETAIL 5 FP3|FP2

D — PROVIDE UPRIGHT SPRINKLER HEADS IN ROOMS WITH NO CEILINGS. SEE DETAIL 6 FP3|FP2

E — 4" DI FIRE LINE TO SIAMESE FDC. SEE DW C3 FOR CONTINUATION

F — 6" DI FIRE LINE. SEE DWG C3 FOR CONTINUATION

G — PROVIDE SWIVEL LOOP HANGER FOR PIPE 2 INCH IPS AND SMALLER. 1 FP3|FP2

H — PROVIDE CLEVIS PIPE HANGER FOR PIPE 2 1/2" AND LARGER. 2 FP3|FP2

J — USE CENTER LOAD BEAM CLAMPS TO SUPPORT HANGERS. MSS-SP-58 (TYPE 30) OR MSS-SP-58 (TYPE 21). 7 FP3|FP2

K — CONTRACTOR TO PROVIDE PORTABLE FIRE EXTINGUISHERS PER NFPA 10.

GRAPHIC SCALE

0 1 2 4 8

SCALE IN FEET
1/4" = 1'-0"

THIS SPACE RESERVED

SYM	ZONE	DESCRIPTION	DATE	APPROVED
A		ADDED SHEET-INITIAL RELEASE TO EDC	12/05/11	KM

REVISIONS

THIS DRAWING CREATED IN AUTOCAD 2010 FILE FORMAT AND WILL BE REVISED ONLY ON AN AUTOCAD SYSTEM. FILE: 14000189-DP5-FP03.DWG

JONES EDMUNDS
730 NE WALDO ROAD, GAINESVILLE, FLORIDA 32641 / (352) 377-5821
3910 S WASHINGTON AVE, SUITE 210, TITUSVILLE, FLORIDA 32780 / (321) 269-2950

SIGNATURES	DATE
DRAWN S. HAFERKAMP	12/05/11
CHECKED W. LEANHARDT	12/05/11
SUBMITTED C. BAGGETT	12/05/11
ST of LICENSURE: FL LICENSE NO: 56047	
APPROVED M. CLARK	12/15/11
N. COLVIN	12/9/11

NATIONAL AERONAUTICS AND SPACE ADMINISTRATION
JOHN F. KENNEDY SPACE CENTER, NASA
KENNEDY SPACE CENTER, FLORIDA

REVITALIZE WATER & WASTEWATER SYSTEMS - VOLUME 5 OF 5
W1 PUMP STATION REPLACEMENT

FIRE PROTECTION PLAN

FILE NO.	SIZE	DWG. NO.	REV
	F	79K38877 VOL 5	A

PROJ. NO. 96968.3 | SHEET 60

FP3

NOTICE: When Government drawings, specifications, or other data are used for any purpose other than in connection with a definitely related Government procurement operation, the United States Government thereby incurs no responsibility nor obligation whatsoever; and the fact that the Government may have formulated, furnished, or in any way supplied the said drawings, specifications or other data is not to be regarded by implication or otherwise as in any manner licensing the holder or any other person or corporation, or conveying any rights or permission to manufacture, use, or sell any patented invention that may in any way be related thereto.

INSTRUMENT IDENTIFICATION

EXAMPLE SYMBOLS

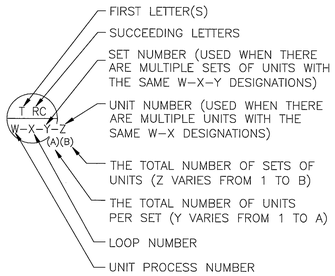

TT — FIELD MOUNTED INSTRUMENT

I/P FY — REAR–OF–PANEL MOUNTED INSTRUMENT

FIC — PANEL MOUNTED INSTRUMENT

QL — MOTOR CONTROL CENTER MOUNTED INSTRUMENT

SPECIAL CASES

OC QL — OPENED AND CLOSED EVENT LIGHTS

OC ZL — OPENED AND CLOSED POSITION LIGHTS

OC ZS — OPENED AND CLOSED POSITION SWITCHES

OO HS — ON–OFF HAND SWITCH. MAINTAINED CONTACT SWITCH (CONTROLLED DEVICE WILL NOT RESTART ON RETURN OF POWER AFTER POWER FAILURE).

SS HS — STOP–START HAND SWITCH MOMENTARY CONTACT SWITCHES (CONTROLLED DEVICE WILL NOT RESTART ON RETURN OF POWER AFTER POWER FAILURE).

OSC HS — ELECTRIC ACTUATOR WITH INTEGRAL OPEN–STOP–CLOSE MOMENTARY CONTACT CONTROL SWITCH

CM FIHR — FLOW INDICATING, COMPUTER/MANUAL CONTROL STATION

CAM FIC — FLOW INDICATING, COMPUTER/AUTO/MANUAL CONTROL STATION

SSC FIC — FLOW INDICATING SUPERVISORY SET POINT (BY COMPUTER), AUTO/MANUAL CONTROL STATION

INSTRUMENT IDENTIFICATION LETTERS TABLE

	FIRST LETTER(S)		SUCCEEDING LETTERS		
	PROCESS OR INITIATING VARIABLE	MODIFIER	READOUT OR PASSIVE FUNCTION	OUTPUT FUNCTION	MODIFIER
A	ANALYSIS (+)		ALARM		
B	BURNER FLAME		USERS CHOICE (+)	USERS CHOICE (+)	USERS CHOICE
C	CONDUCTIVITY			CONTROL	
D	DENSITY (S.G.)	DIFFERENTIAL			
E	VOLTAGE		PRIMARY ELEMENT		
F	FLOW RATE				
G	GAUGE		GLASS	GATE	
H	HAND (MANUAL)				HIGH
I	CURRENT		INDICATE		
J	POWER	SCAN			
K	TIME OR SCHEDULE			CONTROL STATION	
L	LEVEL		LIGHT (PILOT)		LOW
M	MOTION				MIDDLE
N	USERS CHOICE (+)		USERS CHOICE (+)	USERS CHOICE (+)	USERS CHOICE (+)
O	USERS CHOICE (+)		ORIFICE		
P	PRESSURE (OR VACUUM)		POINT (TEST CONNECTION)		
Q	QUANTITY OR EVENT (+)	INTEGRATE	INTEGRATE		
R			RECORD OR PRINT		
S	SPEED OR FREQUENCY	SAFETY		SWITCH	
T	TEMPERATURE			TRANSMIT	
U	MULTIVARIABLE (+)		MULTIFUNCTION (+)	MULTIFUNCTION (+)	MULTIFUNCTION (+)
V	VISCOSITY			VALVE OR DAMPER	
W	WEIGHT OR FORCE		WELL		
X	UNCLASSIFIED (+)		UNCLASSIFIED	UNCLASSIFIED (+)	UNCLASSIFIED (+)
Y	USERS CHOICE (+)			RELAY OR COMPUTE (+)	
Z	POSITION			DRIVE, ACTUATE OR UNCLASSIFIED FINAL CONTROL ELEMENT	

(+) WHEN USED, EXPLANATION IS SHOWN ADJACENT TO INSTRUMENT SYMBOL.
SEE ABBREVIATIONS AND LETTER SYMBOLS

TRANSDUCERS

A	ANALOG	I	CURRENT
D	DIGITAL	P	PNEUMATIC
E	VOLTAGE	PF	PULSE FREQUENCY
F	FREQUENCY	PD	PULSE DURATION
H	HYDRAULIC	R	RESISTANCE

EXAMPLE:

I/P FY — CURRENT TO PNEUMATIC TRANSDUCER (BACK OF PANEL, IN A FLOW LOOP)

XX XXX X–X — SOFTWARE IMPLEMENTED OPERATOR INTERFACE

XX — SOFTWARE IMPLEMENTED CALCULATION

LINE LEGEND

- PROCESS (CLOSED CONDUIT, DASHED LINE INDICATES ALTERNATE FLOW STREAM)
- PROCESS (FUTURE)
- –A– –A– ANALOG SIGNAL (4 TO 20 mAdc, ETC.)
- DISCRETE SIGNAL (ON/OFF, ETC.)
- PNEUMATIC SIGNAL
- –X–X–X– FILLED SYSTEM SIGNAL
- –L–L–L– HYDRAULIC SYSTEM SIGNAL
- –o––o– DATA LINK
- –M– MANUFACTURER SUPPLIED SIGNAL CABLE
- –S– SERIAL SIGNAL
- –FO– FIBER OPTIC
- BUILDING OR FACILITY BOUNDARY
- PACKAGE SYSTEM EQUIPMENT

PARALLELING LINES

(2) 3(2)
(A) (B)

(A) TOTAL OF 2 SIGNALS
(B) 3 TYPICAL SETS OF 2 SIGNALS EACH. TOTAL OF 6 SIGNALS.

CONNECTING LINES

NON–CONNECTING LINES

INTERFACE SYMBOLS

WA S — D WA

= PROCESS INTERFACE

= SIGNAL INTERFACE

W = SOURCE UNIT PROCESS NO.

A = INTERFACE NO.

D = DESTINATION DRAWING NO.

S = SOURCE DRAWING NO.

N — PROCESS OR SIGNAL LINE CONTINUATION N=1,2,3,ETC — N

INTERFACE TO OR FROM PROCESS EXTERNAL TO PROJECT

SELF CONTAINED VALVE, ACTUATED VALVE & EQUIPMENT TAG NUMBERS

WD–XY
W = UNIT PROCESS NUMBER
X = LOOP NUMBER
Y = UNIT NUMBER

D:

GW	= GATEWAY	PD	= PULSATION DAMPER
HT	= HYDRO TURBINE	SKD	= SKID
LIU	= LIGHT INTERFACE UNIT	SM	= STATIC MIXER
M	= MECHANICAL EQUIPMENT	TC	= TRANSCEIVER
MC	= MEDIA CONVERTER	TK	= TANK
MP	= METERING PUMP	V	= VALVE (SEE VALVE SCHEDULE)
NS	= NETWORK SWITCH	VH	= VAPOR HEATER
OWS	= OPERATOR WORKSTATION	VP	= VAPORIZER
P	= PUMP		

ABBREVIATIONS & LETTER SYMBOLS

AC	ALTERNATING CURRENT
ALKY	ALKALINITY
AM	AUTO–MANUAL
CAM	COMPUTER–AUTO–MANUAL
CCS	CENTRAL CONTROL SYSTEM
CL_2	CHLORINE (TYPICAL: USE STANDARD CHEMICAL ELEMENT ABBREVIATION)
CCL_2	COMBINED CHLORINE RESIDUAL
CM	COMPUTER–MANUAL
COD	CHEMICAL OXYGEN DEMAND
XCP–Y	CONTROL PANEL: X=UNIT PROCESS NO. , Y=LOOP NO.
DC	DIRECT CURRENT
DO	DISSOLVED OXYGEN
FCL_2	FREE CHLORINE RESIDUAL
FNH_3	FREE AMMONIA RESIDUAL
FOS	FAST–OFF–SLOW
FOSA	FAST–OFF–SLOW–AUTO
FOSR	FAST–OFF–SLOW–REMOTE
XFP–Y	FIELD PANEL: X=UNIT PROCESS NO. , Y=LOOP NO.
FR	FORWARD–REVERSE
HDNS	HARDNESS
HOA	HAND–OFF–AUTO
HOR	HAND–OFF–REMOTE
LEL	LOWER EXPLOSIVE LIMIT
LIU	LIGHT INTERFACE UNIT
LOS	LOCKOUT STOP
LR	LOCAL–REMOTE
MA	MANUAL–AUTO
MBAS	METHYLENE BLUE ACTIVE SUBSTANCES
MC	MODULATE–CLOSE
MCC–X	MOTOR CONTROL CENTER NO. X
MP	METERING PUMP
MSC	MANUFACTURER SUPPLIED CABLE
OC	OPEN–CLOSE (D)
OCR	OPEN–CLOSE–REMOTE
OCA	OPEN–CLOSE–AUTO
OO	ON–OFF
OOA	ON–OFF–AUTO
OOR	ON–OFF–REMOTE
OP	ORTHO PHOSPHATE
ORP	OXIDATION REDUCTION POTENTIAL
OSC	OPEN–STOP–CLOSE
pH	HYDROGEN ION CONCENTRATION
PLC	PROGRAMMABLE LOGIC CONTROLLER
RM–X	REMOTE MULTIPLEXING MODULE NO. X
RTU–X	REMOTE TELEMETRY UNIT NO. X
SF	SLOWER–FASTER
SKD	SKID
SS	START–STOP
SSC	SUPERVISORY SET POINT CONTROL
TCL_2	TOTAL CHLORINE RESIDUAL
TK	TANK
TOC	TOTAL ORGANIC CARBON
TOD	TOTAL OXYGEN DEMAND
TURB	TURBIDITY
VFD	VARIABLE FREQUENCY DRIVE
VH	VAPOR HEATER
VHC	VOLATILE HYDROCARBONS
VIB	VIBRATION
VP	VAPORIZER

GENERAL NOTES

1. COMPONENTS AND PANELS SHOWN WITH A DOUBLE ASTERISK (**) ARE TO BE PROVIDED AS PART OF A PACKAGE SYSTEM
2. COMPONENTS AND PANELS SHOWN WITH A SINGLE ASTERISK (*) ARE TO BE UNDER DIVISION 26, ELECTRICAL.
3. THIS IS A STANDARD LEGEND. THEREFORE, NOT ALL OF THIS INFORMATION MAY BE USED ON THIS PROJECT.
4. ALL COMPONENTS SHOWN INSIDE PACKAGE SYSTEM BOUNDARY ARE TO BE PROVIDED AS PART OF THE PACKAGE SYSTEM.

THIS SPACE RESERVED

SYM	ZONE	DESCRIPTION	DATE	APPROVED
A		ADDED SHEET–INITIAL RELEASE TO EDC	12/05/11	KM

REVISIONS

THIS DRAWING CREATED IN AUTOCAD 2010 FILE FORMAT AND WILL BE REVISED ONLY ON AN AUTOCAD SYSTEM. FILE: 14000189–DP5–I01.DWG

JONES EDMUNDS
730 NE WALDO ROAD, GAINESVILLE, FLORIDA 32641 / (352) 377-5821
3910 S WASHINGTON AVE, SUITE 210, TITUSVILLE, FLORIDA 32780 / (321) 269-2950

SIGNATURES	DATE
DRAWN D. FITZGERALD	12/05/11
CHECKED M CLARK	12/05/11
SUBMITTED D. FITZGERALD	12/05/11
ST of LICENSURE: FL LICENSE NO: 40976	
APPROVED M. CLARK	12/15/11
FOR L. KIEL	12/9/11

NATIONAL AERONAUTICS AND SPACE ADMINISTRATION
JOHN F. KENNEDY SPACE CENTER, NASA
KENNEDY SPACE CENTER, FLORIDA

REVITALIZE WATER & WASTEWATER SYSTEMS - VOLUME 5 OF 5
W1 PUMP STATION REPLACEMENT

INSTRUMENTATION AND CONTROLS LEGEND SHEET 1 OF 2

FILE NO.	SIZE	DWG. NO.	REV
	F	79K38877 VOL 5	A
PROJ. NO. 96968.3		SHEET 61	

I1

D. P. FITZGERALD, INC.
Water & Wastewater Treatment
Process Controls
Alachua, Florida COA 8991

NOTICE: When Government drawings, specifications, or other data are used for any purpose other than in connection with a definitely related Government procurement operation, the United States Government thereby incurs no responsibility nor obligation whatsoever; and the fact that the Government may have formulated, furnished, or in any way supplied the said drawings, specifications or other data is not to be regarded by implication or otherwise as in any manner licensing the holder or any other person or corporation, or conveying any rights or permission to manufacture, use, or sell any patented invention that may in any way be related thereto.

VALVE SYMBOLS

- GATE
- KNIFE GATE
- BUTTERFLY
- GLOBE
- BALL
- VEE– BALL
- PLUG
- SEAT PORT ECCENTRIC PLUG
- DIAPHRAGM
- PINCH
- NEEDLE
- SWING CHECK
- DOUBLE CHECK BACKFLOW PREVENTER
- REDUCED PRESSURE BACKFLOW PREVENTER
- BALL CHECK
- PRESSURE RELIEF
- AIR AND/OR VACUUM RELEASE
- REGULATED SIDE PRESSURE/CONTROL
- MULTI–PORT VALVES (BALL VALVE SHOWN. FOR OTHER VALVE TYPES, APPROPRIATE VALVE SYMBOL SHOWN). ARROWS INDICATE FLOW PATTERN. SEAT PORTS ARE IMPLIED BY INDICATED FLOW PATTERN.
- SAMPLE
- MUD
- FLOW CONTROL VALVE

GATE SYMBOLS

- SLUICE
- BUTTERFLY
- FLAP
- FABRICATED SLIDE
- SHEAR

ACTUATOR SYMBOLS

- MOTORIZED
- ELECTROHYDRAULIC
- PNEUMATIC
- HYDRAULIC
- SOLENOID
- MANUAL

NOTES:

1. ON LOSS OF PRIMARY POWER (PNEUMATIC, ELECTRICAL OR HYDRAULIC)
   XX: FO = FAIL OPEN
   FC = FAIL CLOSED
   FLP = FAIL TO LAST POSITION

PRIMARY ELEMENT SYMBOLS

- PARSHALL FLUME
- WEIR
- ORIFICE PLATE
- FLOW TUBE
- PITOT–STATIC
- VORTEX METER
- ROTAMETER
- ULTRASONIC FLOWMETER (INLINE)
- THERMAL MASS FLOW METER
- MASS FLOW METER
- ELECTROMAGNETIC FLOWMETER
- PROPELLER OR TURBINE METER
- DENSITY METER (X: N = NUCLEAR, O = OPTICAL, U = ULTRASONIC)
- ULTRASONIC FLOWMETER (CLAMP–ON)
- LEVEL (ULTRASONIC)
- LEVEL (BUBBLER TUBE)
- ELECTRODE
- LEVEL (FLOAT)

MISCELLANEOUS SYMBOLS

NOTE:
XX: AS ADJUSTABLE SPEED
CS–1 CONSTANT SPEED (SINGLE SPEED)
CS–2 CONSTANT SPEED (TWO SPEED)

- SIGHT GLASS
- DIAPHRAGM SEAL
- BLIND FLANGE
- AIR GAP
- VENT TO ATMOSPHERE
- PLUG
- RECEPTACLE
- RADIO ANTENNA
- "ON" TIME DELAY B "ON" X–SEC. AFTER A "ON". INSTANT "OFF".
- "OFF" TIME DELAY B "OFF" X–SEC. AFTER A "OFF". INSTANT "ON".
- INTERLOCK. SEE CONTROL DIAGRAMS
- AIR SET XX= SUPPLY PRESSURE IN PSIG.
- AIR SET FILTER/ REGULATOR/ GAUGE SET
- CALIBRATION CYLINDER
- STATIC MIXER
- FILTER
- 120 VOLT, 60 HZ POWER
- 480 VOLT, 60 HZ POWER
- ANNULAR DIAPHRAGM SEAL
- MIXER
- ELECTRIC MOTOR
- PRESSURE GAUGE
- CARD READER
- SECURITY CAMERA
- OPERATOR WORKSTATION
- LOGIC ELEMENT: IF A AND NOT B THEN C
- LOGIC ELEMENT: IF A OR B THEN C
- ON/OFF RELAY. INPUT IS CONNECTED TO OUTPUT WHEN SWITCHING SIGNAL IS PRESENT.
- SWITCHING SIGNAL SWITCHING RELAY. INPUT WITH DOT IS CONNECTED TO OUTPUT WHEN SWITCHING SIGNAL IS PRESENT
  OTHER INPUT IS CONNECTED TO OUTPUT WHEN SWITCHING SIGNAL IS NOT PRESENT.
- FLUSHING CONNECTION
- HOSE ADAPTOR
- SEAL WATER SET
- SIGHT GLASS
- PULSATION DAMPENER
- HUB DRAIN
- QUICK DISCONNECT
- RADIO LINK
- NETWORK GATEWAY OR BRIDGE
- LIGHT–COPPER TRANSCEIVER
- COMPUTER WORKSTATION OR SERVER
- WYE
- CONCENTRIC REDUCER
- ECCENTRIC REDUCER
- LEVEL GAUGE

PUMP AND COMPRESSOR SYMBOLS

- CENTRIFUGAL PUMP (DRY PIT)
- CENTRIFUGAL WET PIT PUMP OR TURBINE PUMP
- CHEMICAL FEED PUMP
- DIAPHRAGM PUMP
- GEAR PUMP OR BLOWER (POSITIVE DISPLACEMENT)
- PISTON PUMP
- PROGRESSIVE CAVITY PUMP
- SUBMERSIBLE SUMP PUMP
- PERISTALTIC HOSE PUMP
- COMPRESSOR (CENTRIFUGAL), BLOWER OR TURBINE
- COMPRESSOR (PISTON)
- EJECTOR

D. P. FITZGERALD, INC.
Water & Wastewater Treatment Process Controls
Alachua, Florida COA 8991

THIS SPACE RESERVED

SYM	ZONE	DESCRIPTION	DATE	APPROVED
A		ADDED SHEET- INITIAL RELEASE TO EDL	12/05/11	

REVISIONS

THIS DRAWING CREATED IN AUTOCAD 2010 FILE FORMAT AND WILL BE REVISED ONLY ON AN AUTOCAD SYSTEM. FILE: 14000189–DP5–I02.DWG

JONES EDMUNDS
730 NE WALDO ROAD, GAINESVILLE, FLORIDA 32641 / (352) 377-5821
3910 S WASHINGTON AVE, SUITE 210, TITUSVILLE, FLORIDA 32780 / (321) 269-2950

SIGNATURES	DATE
DRAWN D. FITZGERALD	12/05/11
CHECKED M. CLARK	12/05/11
SUBMITTED D. FITZGERALD	12/05/11
ST of LICENSURE: FL LICENSE NO: 40976	
APPROVED M. CLARK	12/15/11
FOR L. KIEL	12/9/11

NATIONAL AERONAUTICS AND SPACE ADMINISTRATION
JOHN F. KENNEDY SPACE CENTER, NASA
KENNEDY SPACE CENTER, FLORIDA

REVITALIZE WATER & WASTEWATER SYSTEMS - VOLUME 5 OF 5
W1 PUMP STATION REPLACEMENT

INSTRUMENTATION AND CONTROLS LEGEND SHEET 2 OF 2

FILE NO.	SIZE	DWG. NO.	REV
	F	79K38877 VOL 5	A

PROJ. NO. 96968.3 SHEET 62

I2

NOTICE: When Government drawings, specifications, or other data are used for any purpose other than in connection with a definitely related Government procurement operation, the United States Government thereby incurs no responsibility nor obligation whatsoever; and the fact that the Government may have formulated, furnished, or in any way supplied the said drawings, specifications or other data is not to be regarded by implication or otherwise as in any manner licensing the holder or any other person or corporation, or conveying any rights or permission to manufacture, use, or sell any patented invention that may in any way be related thereto.

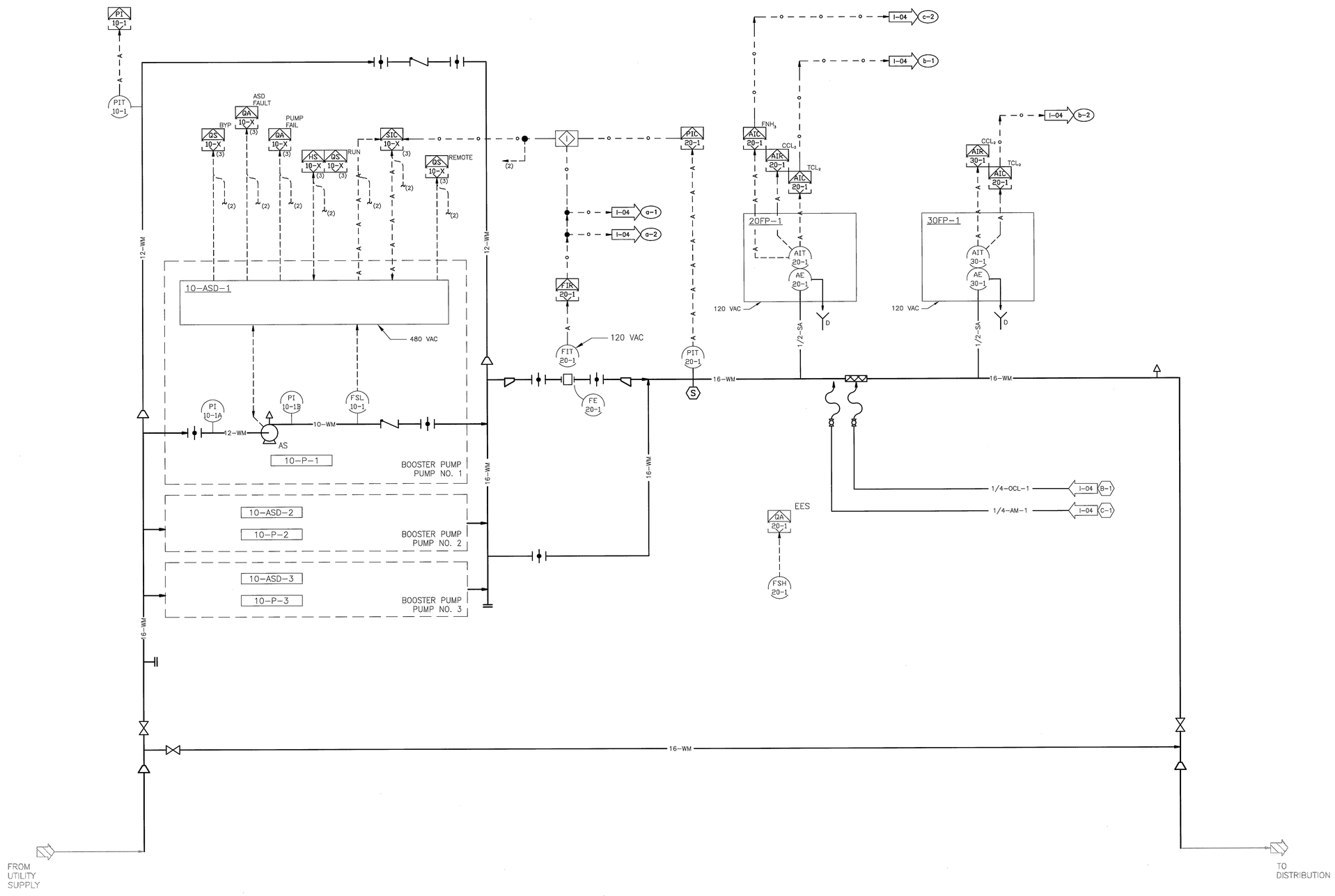

D. P. FITZGERALD, INC.
Water & Wastewater Treatment Process Controls
Alachua, Florida COA 8991

THIS SPACE RESERVED

SYM	ZONE	DESCRIPTION	DATE	APPROVED
A		ADDED SHEET - INITIAL RELEASE TO EDC	12/05/11	KMC

REVISIONS

THIS DRAWING CREATED IN AUTOCAD 2010 FILE FORMAT AND WILL BE REVISED ONLY ON AN AUTOCAD SYSTEM. FILE: 14000189-DP5-I03.DWG

JONES EDMUNDS
730 NE WALDO ROAD, GAINESVILLE, FLORIDA 32641 / (352) 377-5821
3910 S WASHINGTON AVE, SUITE 210, TITUSVILLE, FLORIDA 32780 / (321) 269-2950

SIGNATURES	DATE
DRAWN D. FITZGERALD	12/05/11
CHECKED M. CLARK	12/05/11
SUBMITTED D. FITZGERALD	12/05/11
ST of LICENSURE: FL LICENSE NO: 40976	
APPROVED M. CLARK	12/5/11
FOR L. KIEL	12/9/11

NATIONAL AERONAUTICS AND SPACE ADMINISTRATION
JOHN F. KENNEDY SPACE CENTER, NASA
KENNEDY SPACE CENTER, FLORIDA

REVITALIZE WATER & WASTEWATER SYSTEMS - VOLUME 5 OF 5
W1 PUMP STATION REPLACEMENT
P&ID - W1 PUMP STATION

FILE NO.	SIZE	DWG. NO.	REV
	F	79K38877 VOL 5	A
PROJ. NO. 96968.3		SHEET 63	

13

NOTICE: When Government drawings, specifications, or other data are used for any purpose other than in connection with a definitely related Government procurement operation, the United States Government thereby incurs no responsibility nor obligation whatsoever; and the fact that the Government may have formulated, furnished, or in any way supplied the said drawings, specifications or other data is not to be regarded by implication or otherwise as in any manner licensing the holder or any other person or corporation, or conveying any rights or permission to manufacture, use, or sell any patented invention that may in any way be related thereto.

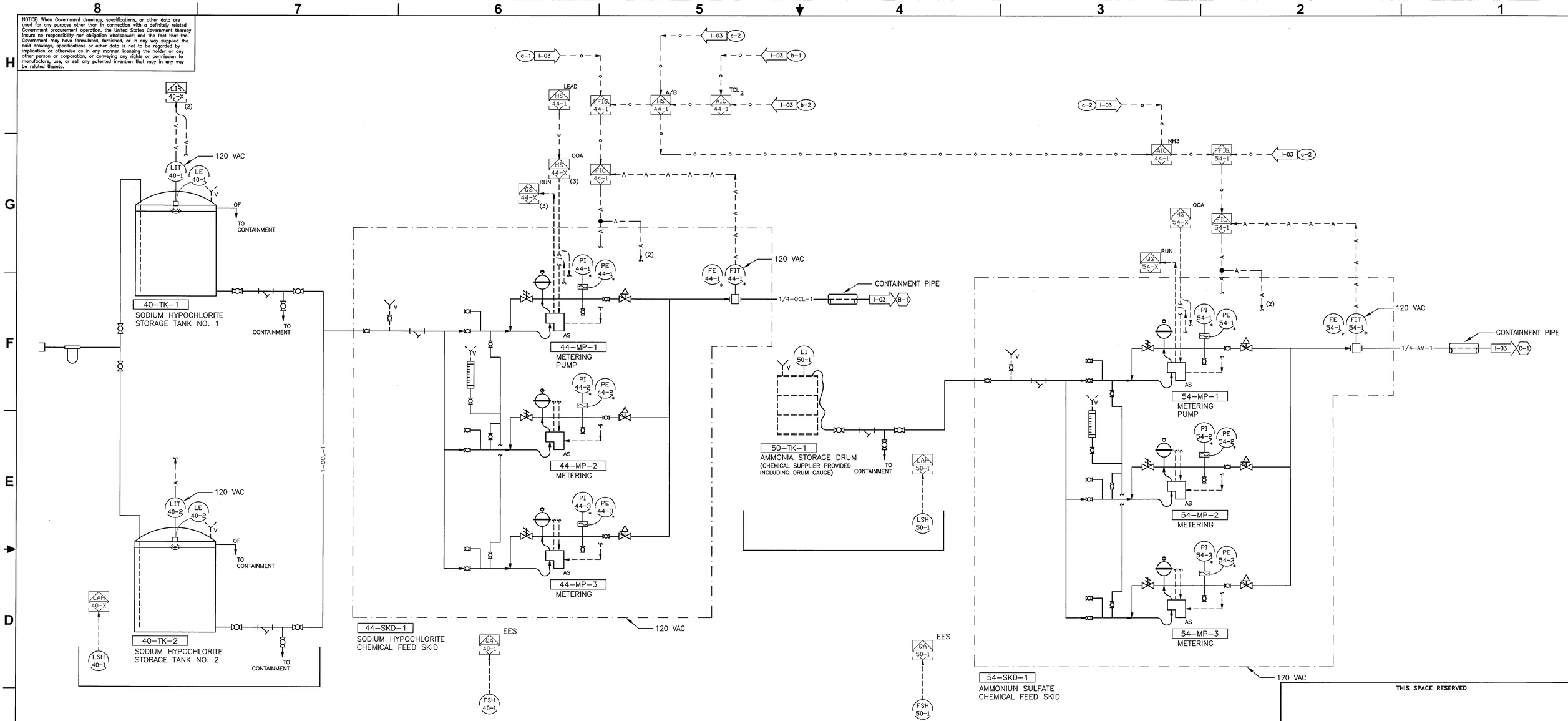

SODIUM HYPOCHLORITE FACILITY

AMMONIUM SULFATE FACILITY

THIS SPACE RESERVED

SYM	ZONE	DESCRIPTION	DATE	APPROVED
A		ADDED SHEET-INITIAL RELEASE TO EDL	12/05/11	KM

REVISIONS

THIS DRAWING CREATED IN AUTOCAD 2010 FILE FORMAT AND WILL BE REVISED ONLY ON AN AUTOCAD SYSTEM. FILE: 14000189-DP5-I04.DWG

JONES EDMUNDS
730 NE WALDO ROAD, GAINESVILLE, FLORIDA 32641 / (352) 377-5821
3910 S WASHINGTON AVE, SUITE 210, TITUSVILLE, FLORIDA 32780 / (321) 269-2950

SIGNATURES	DATE
DRAWN D. FITZGERALD	12/05/11
CHECKED M CLARK	12/05/11
SUBMITTED D. FITZGERALD	12/05/11
ST of LICENSURE: FL LICENSE NO: 40976	
APPROVED M. CLARK	12/5/11
FOR L. KIEL	12/9/11

NATIONAL AERONAUTICS AND SPACE ADMINISTRATION
JOHN F. KENNEDY SPACE CENTER, NASA
KENNEDY SPACE CENTER, FLORIDA

REVITALIZE WATER & WASTEWATER SYSTEMS - VOLUME 5 OF 5
W1 PUMP STATION REPLACEMENT
P&ID - CHEMICAL FEED SYSTEMS

FILE NO.	SIZE	DWG. NO.	REV
	F	79K38877 VOL 5	A
PROJ. NO. 96968.3		SHEET 64	

14

D. P. FITZGERALD, INC.
Water & Wastewater Treatment
Process Controls
Alachua, Florida COA 8991

NOTICE: When Government drawings, specifications, or other data are used for any purpose other than in connection with a definitely related Government procurement operation, the United States Government thereby incurs no responsibility nor obligation whatsoever; and the fact that the Government may have formulated, furnished, or in any way supplied the said drawings, specifications or other data is not to be regarded by implication or otherwise as in any manner licensing the holder or any other person or corporation, or conveying any rights or permission to manufacture, use, or sell any patented invention that may in any way be related thereto.

W1 PUMP STATION SEQUENCE OF OPERATION

GENERAL

THE W1 PUMP STATION CONSISTS OF THE FOLLOWING COMPONENTS:
- BOOSTER PUMPS (THREE WITH ONE FUTURE)
- AMMONIUM SULFATE CHEMICAL FEED SYSTEM (BULK TANK AND METERING PUMPS)
- SODIUM HYPOCHLORITE CHEMICAL FEED SYSTEM (BULK TANK AND METERING PUMPS)
- PLC BASED FIELD INTERFACE CONTROLLER (FIC)

THE BOOSTER PUMPS SERVE TO INCREASE AND MAINTAIN THE PRESSURE OF THE POTABLE WATER DISTRIBUTION SYSTEM TO AN OPERATOR–ENTERED VALUE.

THE CHEMICAL FEED SYSTEMS SERVE TO MAINTAIN THE DISINFECTANT (MONOCHLORAMINE) RESIDUAL AT AN OPERATOR–ENTERED VALUE. PRIMARY FUNCTION IS TO INCREASE THE DISINFECTANT RESIDUAL AND CONSUME THE FREE AMMONIA RESIDUAL CONTAINED THE WATER SUPPLY. PROVISIONS ARE INCLUDED TO INCREASING THE DISINFECTANT RESIDUAL BY ADDING BOTH AMMONIA AND HYPOCHLORITE.

THE FIC (PUMP STATION CONTROL SYSTEM) SHALL MONITOR AND CONTROL THE OPERATION OF THE BOOSTER PUMPS AND THE CHEMICAL FEED, MONITOR THE DISTRIBUTION FLOW RATE, PRESSURE, AND DISINFECTANT RESIDUAL, AND PRESENT THE DATA FOR USE BY KCCS.

REFER TO THE SPECIFICATIONS FOR MORE DETAILED DESCRIPTION OF THE CONTROL OPERATION. 'COMMON FUNCTIONS' REFERENCED HEREIN ARE DESCRIBED IN THE SPECIFICATIONS.

CONTROL SEQUENCE

1. BOOSTER PUMP OPERATION

THE BOOSTER PUMPS SHALL OPERATE AS DESCRIBED IN THE COMMON FUNCTION LABELED 'VARIABLE SPEED MOTOR CONTROL', EXCEPT AS MODIFIED BELOW.

MANUAL MODE (LOCAL TO FIC) – PROVIDE FOR OPERATOR START/STOP CONTROL AND OPERATOR ADJUSTMENT OF PUMP SPEED. STOP THE SELECTED PUMPS WHENEVER ANY THE PUMP IS OUT–OF–SERVICE

MANUAL MODE (REMOTE VIA KCCS) – KCCS SHALL MONITOR THE STATUS OF THE BOOSTER PUMPS. DO NOT PROVIDE MANUAL CONTROL OF THE PUMPS VIA KCCS.

AUTOMATIC MODE – OPERATE THE BOOSTER PUMPS (START/STOP AND SPEED VARIATION) TO MAINTAIN DISCHARGE PRESSURE TO AN OPERATOR–ENTERED VALUE (INITIALLY SET AT 75 PSIG). USE A COMMON PID LOOP TO VARY THE SPEED COMMAND SIGNAL (OUTPUT VARIABLE) SENT TO ALL OPERATING PUMPS. START ONE ADDITIONAL PUMP WHENEVER THE OUTPUT VARIABLE EXCEEDS AN OPERATOR–ENTERED 'HIGH' VALUE (INITIALLY SET AT 95 PERCENT SPEED). STOP ONE PUMP WHENEVER THE OUTPUT VARIABLE FALLS BELOW A SECOND OPERATOR–ENTERED 'LOW VALUE' (SEE SPECIFICATIONS REGARDING MINIMUM SPEED).

START THE LEAD PUMP WHENEVER THE DEMAND FLOW RATE EXCEEDS AN OPERATOR–ENTERED VALUE (INITIALLY SET AT 400 GPM) AND THE DIFFERENCE IN SUCTION AND DISCHARGE PRESSURE EXCEEDS AN OPERATOR–ENTERED VALUE (INITIALLY SET AT 20 FEET WATER COLUMN).

STOP ALL PUMPS WHENEVER:

DEMAND FLOW RATE IS LESS THAN A SEPARATE, OPERATOR–ENTERED VALUE. (INITIALLY SET AT 350 GPM)
DEMAND FLOW RATE IS WITHIN AN OPERATOR ADJUSTABLE RANGE (INITIALLY 200 TO 1,000 GPM) AND DISCHARGE PRESSURE IS AN OPERATOR–ENTERED VALUE (INITIALLY SET AT 2 PSIG) GREATER THAN THE PRESSURE SET POINT.

SEQUENCE PUMP OPERATION IN A LEAD/LAG/STANDBY FASHION. START THE NEXT PUMP IN THE SEQUENCE IN THE EVENT THE 'CALLED' PUMP IS OUT–OF–SERVICE, AS DESCRIBED BELOW IN ALARM EVENTS. START THE STANDBY PUMP IN THE EVENT THE LAG PUMP IS OUT–OF–SERVICE.

PUMP OUT OF SERVICE – DEFINE A PUMP AS OUT–OF–SERVICE WHENEVER ANY OF THE FOLLOWING CONDITIONS EXIST:

IN BYPASS
NOT IN REMOTE
PUMP FAIL
ASD FAULT

2. SODIUM HYPOCHLORITE FEED SYSTEM OPERATION

THE SODIUM HYPOCHLORITE METERING PUMPS SHALL OPERATE AS DESCRIBED IN THE COMMON FUNCTION LABELED 'VARIABLE SPEED MOTOR CONTROL', EXCEPT AS MODIFIED BELOW.

MANUAL MODE (LOCAL TO FIC) – PROVIDE FOR OPERATOR START/STOP CONTROL AND OPERATOR ADJUSTMENT OF PUMP SPEED. STOP THE SELECTED PUMPS WHENEVER THE PUMP IS OUT–OF–SERVICE

MANUAL MODE (REMOTE VIA KCCS) – KCCS SHALL MONITOR THE STATUS OF THE METERING PUMPS. DO NOT PROVIDE MANUAL CONTROL OF THE PUMPS VIA KCCS.

AUTOMATIC MODE – OPERATE THE METERING PUMPS (START/STOP AND STROKE RATE VARIATION) TO MAINTAIN AN OPERATOR–ENTERED CHEMICAL FEED RATE (SEE BELOW). USE A COMMON PID LOOP TO VARY THE STROKE RATE SIGNAL (OUTPUT VARIABLE) SENT TO ALL OPERATING PUMPS. START ONE ADDITIONAL PUMP WHENEVER THE OUTPUT VARIABLE EXCEEDS AN OPERATOR–ENTERED 'HIGH' VALUE (INITIALLY SET AT 95 PERCENT STROKE RATE). STOP ONE PUMP WHENEVER THE OUTPUT VARIABLE FALLS BELOW A SECOND OPERATOR–ENTERED 'LOW VALUE' (INITIALLY SET AT 20 PERCENT STROKE RATE).

STOP ALL CHEMICAL FEED WHENEVER THE PUMP STATION DISCHARGE FLOW RATE IS LESS THAN 200 GPM FOR AN OPERATOR–ENTERED DURATION (INITIALLY SET TO 3–MINUTES). INHIBIT CHEMICAL FEED UNTIL THE PUMP STATION DISCHARGE FLOW RATE IS 200 GPM OR GREATER.

PROVIDE FOR OPERATOR SELECTION BETWEEN FOUR MODES FOR ESTABLISHING THE CHLORINE FLOW RATE:
- OPERATOR–ENTERED CHEMICAL FLOW RATE
- OPERATOR–ENTERED CHEMICAL DOSE RATE (FLOW–PACED USING PUMP STATION DISCHARGE FLOW RATE)
- TOTAL DISINFECTANT RESIDUAL BOOST (FLOW–PACED USING PUMP STATION DISCHARGE FLOW RATE)
- AMMONIA SCAVENGING (FLOW–PACED USING PUMP STATION DISCHARGE FLOW RATE).

FOR TOTAL DISINFECTANT RESIDUAL BOOST, CALCULATE THE DOSE RATE AS THE DIFFERENCE BETWEEN THE OPERATOR–ENTERED RESIDUAL VALUE AND THE TOTAL CHLORINE RESIDUAL MEASURED FOR THE SUPPLY WATER. PROVIDE A DOSE RATE TRIM (PID CONTROL) BASED UPON THE MEASURED TOTAL CHLORINE RESIDUAL LEAVING THE PUMP STATION.

FOR AMMONIA SCAVENGING, CALCULATE THE DOSE RATE AS THE FREE AMMONIA RESIDUAL MEASURED FOR THE SUPPLY WATER, TIMES AN OPERATOR–ENTERED CL2:NH3 MULTIPLIER (INITIALLY SET AT 3.5)

SEQUENCE PUMP OPERATION IN A LEAD/LAG/STANDBY FASHION. START THE NEXT PUMP IN THE SEQUENCE IN THE EVENT THE 'CALLED' PUMP IS OUT–OF–SERVICE, AS DESCRIBED BELOW IN ALARM EVENTS. START THE STANDBY PUMP IN THE EVENT THE LAG PUMP IS OUT–OF–SERVICE.

PUMP OUT OF SERVICE – DEFINE A PUMP AS OUT–OF–SERVICE WHENEVER ANY OF THE FOLLOWING CONDITIONS EXIST:

PUMP FAIL

2. AMMONIUM SULFATE FEED SYSTEM OPERATION

THE AMMONIUM SULFATE METERING PUMPS SHALL OPERATE AS DESCRIBED IN THE COMMON FUNCTION LABELED 'VARIABLE SPEED MOTOR CONTROL', EXCEPT AS MODIFIED BELOW.

MANUAL MODE (LOCAL TO FIC) – PROVIDE FOR OPERATOR START/STOP CONTROL AND OPERATOR ADJUSTMENT OF PUMP SPEED. STOP THE SELECTED PUMPS WHENEVER ANY THE PUMP IS OUT–OF–SERVICE

MANUAL MODE (REMOTE VIA KCCS) – KCCS SHALL MONITOR THE STATUS OF THE METERING PUMPS. DO NOT PROVIDE MANUAL CONTROL OF THE PUMPS VIA KCCS.

AUTOMATIC MODE – OPERATE THE METERING PUMPS (START/STOP AND STROKE RATE VARIATION) TO MAINTAIN AN OPERATOR–ENTERED CHEMICAL FEED RATE (SEE BELOW). USE A COMMON PID LOOP TO VARY THE STROKE RATE SIGNAL (OUTPUT VARIABLE) SENT TO ALL OPERATING PUMPS. START ONE ADDITIONAL PUMP WHENEVER THE OUTPUT VARIABLE EXCEEDS AN OPERATOR–ENTERED 'HIGH' VALUE (INITIALLY SET AT 95 PERCENT STROKE RATE). STOP ONE PUMP WHENEVER THE OUTPUT VARIABLE FALLS BELOW A SECOND OPERATOR–ENTERED 'LOW VALUE' (INITIALLY SET AT 20 PERCENT STROKE RATE).

STOP ALL CHEMICAL FEED WHENEVER THE PUMP STATION DISCHARGE FLOW RATE IS LESS THAN 200 GPM FOR AN OPERATOR–ENTERED DURATION (INITIALLY SET TO 3–MINUTES). INHIBIT CHEMICAL FEED UNTIL THE PUMP STATION DISCHARGE FLOW RATE IS 200 GPM OR GREATER.

PROVIDE FOR OPERATOR SELECTION BETWEEN THREE MODES FOR ESTABLISHING THE AMMONIA FLOW RATE:
- OPERATOR–ENTERED CHEMICAL FLOW RATE
- OPERATOR–ENTERED CHEMICAL DOSE RATE (FLOW–PACED USING PUMP STATION DISCHARGE FLOW RATE)
- TOTAL DISINFECTANT RESIDUAL BOOST (FLOW–PACED USING PUMP STATION DISCHARGE FLOW RATE)

FOR TOTAL DISINFECTANT RESIDUAL BOOST, CALCULATE THE DOSE RATE AS THE INVERSE OF AN OPERATOR ENTERED CL2:NH3 MULTIPLE (INITIALLY SET AT 3.5) TIMES THE CALCULATED CHLORINE FEED RATE (SEE SODIUM HYPOCHLORITE FEED SYSTEM) LESS THE FREE AMMONIA RESIDUAL MEASURED IN THE SUPPLY WATER.

SEQUENCE PUMP OPERATION IN A LEAD/LAG/STANDBY FASHION. START THE NEXT PUMP IN THE SEQUENCE IN THE EVENT THE 'CALLED' PUMP IS OUT–OF–SERVICE, AS DESCRIBED BELOW IN ALARM EVENTS. START THE STANDBY PUMP IN THE EVENT THE LAG PUMP IS OUT–OF–SERVICE.

PUMP OUT OF SERVICE – DEFINE A PUMP AS OUT–OF–SERVICE WHENEVER ANY OF THE FOLLOWING CONDITIONS EXIST:

PUMP FAIL

2. POWER RECOVERY (UTILITY AND STANDBY POWER)

STOP ALL PUMPS UPON LOSS OF POWER AS INDICATED BY THE CONTROL PANEL POWER SUPPLY. UPON RESTORATION OF POWER, RESET THE FAULT CONDITIONS FOR THE BOOSTER PUMP DRIVES AND THE CHEMICAL METERING PUMPS. RESTART THE PUMP STATION OPERATION TO ACHIEVE THE OPERATOR SET POINT AS DESCRIBED HEREIN.

ALARM EVENTS:

MAINTAIN ALL ALARM EVENTS UNTIL THE OFFENDING CONDITION IS REMOVED AND THE ALARM IS MANUALLY ACKNOWLEDGED. RESET MAY OCCUR EITHER LOCALLY OR VIA KCCS.

GENERAL – LOSS OF CONTROL POWER

HIGH SERVICE PUMP

PROVIDE A PUMP FAIL ALARM EVENT WHENEVER ANY OF THE HIGH SERVICE PUMPS ARE CALL TO RUN, AND AFTER A PRESET DELAY ARE NOT RUNNING. ESTABLISH NOT RUNNING CONDITION AS EITHER NO RUN SIGNAL FROM ASD OR NO–FLOW SIGNAL DETECTED.

PROVIDE AN ASD FAULT SIGNAL WHENEVER RECEIVED FROM THE ASSOCIATED ASD.

KCCS MONITORING/CONTROL

MONITORING:

DISPLAY ALL ANALOG SIGNALS, AS A MINIMUM THE FOLLOWING:

SUPPLY WATER PRESSURE
DISCHARGE FLOW RATE
DISCHARGE PRESSURE
SUPPLY WATER FREE AMMONIA RESIDUAL
SUPPLY WATER COMBINED CHLORINE RESIDUAL (MONOCHLORAMINE)
SUPPLY WATER TOTAL CHLORINE RESIDUAL
SODIUM HYPOCHLORITE BULK TANK NO. 2 LEVEL
AMMONIUM SULFATE FEED SKID FLOW RATE
BOOSTER PUMP NO. 1 SPEED
BOOSTER PUMP NO. 2 SPEED
BOOSTER PUMP NO. 3 SPEED
DISCHARGE WATER COMBINED CHLORINE RESIDUAL (MONOCHLORAMINE)
DISCHARGE WATER TOTAL CHLORINE RESIDUAL
SODIUM HYPOCHLORITE BULK TANK NO. 1 LEVEL
SODIUM HYPOCHLORITE FEED SKID FLOW RATE

DISPLAY ALL DISCRETE SIGNALS, AS A MINIMUM THE FOLLOWING:
- BOOSTER PUMP (PUMPS 1 THRU 3) RUN STATUS
- BOOSTER PUMP (PUMPS 1 THRU 3) REMOTE STATUS
- BOOSTER PUMP (PUMPS 1 THRU 3) IN BYPASS STATUS

SODIUM HYPOCHLORITE METERING PUMP (PUMPS 1 THRU 3) RUN STATUS
AMMONIUM SULFATE METERING PUMP (PUMPS 1 THRU 3) RUN STATUS

CONTROL:

PROVIDE FOR OPERATOR ENTRY OF THE PUMP STATION PRESSURE SET POINT.
PROVIDE FOR OPERATOR ENTRY OF TOTAL DISINFECTANT RESIDUAL SET POINT.
PROVIDE FOR OPERATOR–ENTRY OF Cl_2:NH3 RATIO

ALARM EVENTS:

DISPLAY ALL ALARM EVENTS, AS A MINIMUM THE FOLLOWING:

HIGH SERVICE PUMPS (PUMPS 1 THRU 3) – PUMP FAIL
HIGH SERVICE PUMPS (PUMPS 1 THRU 3) – ASD FAULT
AMMONIUM SULFATE CONTAINMENT LEVEL HIGH
EYEWASH/SHOWER ACTIVE (THREE LOCATIONS)
SODIUM HYPOCHLORITE CONTAINMENT LEVEL HIGH

AC FAIL
BATTERY POWER LOW
BATTERY SUPERVISION

THIS SPACE RESERVED

SYM	ZONE	DESCRIPTION	DATE	APPROVED
A		ADDED SHEET- INITIAL RELEASE TO EDC	12/05/11	KM

REVISIONS

THIS DRAWING CREATED IN AUTOCAD 2010 FILE FORMAT AND WILL BE REVISED ONLY ON AN AUTOCAD SYSTEM. FILE: 14000189–DP5–I05.DWG

JONES EDMUNDS
730 NE WALDO ROAD, GAINESVILLE, FLORIDA 32641 / (352) 377-5821
3910 S WASHINGTON AVE, SUITE 210, TITUSVILLE, FLORIDA 32780 / (321) 269-2950

SIGNATURES	DATE
DRAWN D. FITZGERALD	12/05/11
CHECKED M CLARK	12/05/11
SUBMITTED D. FITZGERALD	12/05/11
SP of LICENSURE: FL LICENSE NO: 40976	
APPROVED M. CLARK	12/5/11
for L. KIEL	12/9/11

NATIONAL AERONAUTICS AND SPACE ADMINISTRATION
JOHN F. KENNEDY SPACE CENTER, NASA
KENNEDY SPACE CENTER, FLORIDA

REVITALIZE WATER & WASTEWATER SYSTEMS - VOLUME 5 OF 5
W1 PUMP STATION REPLACEMENT

SEQUENCE OF OPERATION W1 PUMP STATION

FILE NO.	SIZE	DWG. NO.	REV
	F	79K38877 VOL 5	A

PROJ. NO. 96968.3 SHEET 65

D. P. FITZGERALD, INC.
Water & Wastewater Treatment
Process Controls
Alachua, Florida COA 8991

15

NOTICE: When Government drawings, specifications, or other data are used for any purpose other than in connection with a definitely related Government procurement operation, the United States Government thereby incurs no responsibility nor obligation whatsoever; and the fact that the Government may have formulated, furnished, or in any way supplied the said drawings, specifications or other data is not to be regarded by implication or otherwise as in any manner licensing the holder or any other person or corporation, or conveying any rights or permission to manufacture, use, or sell any patented invention that may in any way be related thereto.

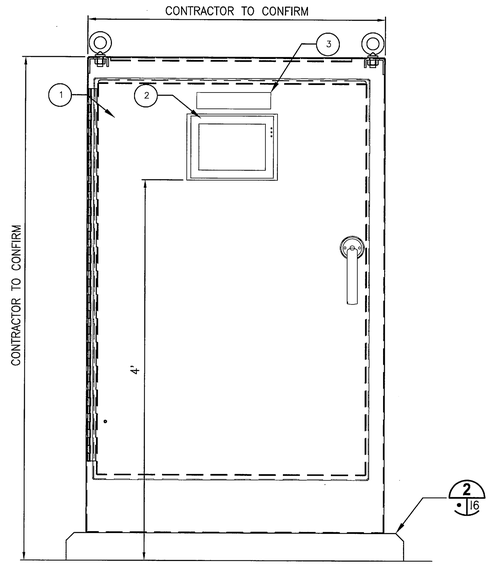

ENCLOSURE FACE ELEVATION

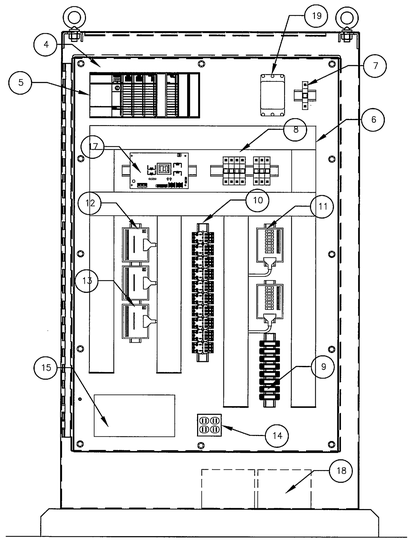

INTERIOR PANEL ELEVATION

ITEM No.	DESCRIPTION	SPECIFICATION
1	ENCLOSURE	NEMA 3R, SST UN-FINISHED, W/ 3-POINT LATCH
2	OPERATOR INTERFACE UNIT (TOUCH SCREEN)	COMPONENT Y63
3	CONTROL PANEL NAMEPLATE	ENGRAVE-'W1 BOOSTER PUMP STATION', 'CONTROL PANEL'
4	PANEL AND ACCESSORIES	CARBON STEEL, PAINTED WHITE, BAKED-ENAMEL FINISH
5	PROGRAMMABLE LOGIC CONTROLLER	COMPONENT Y55
6	WIREWAY	
7	MAIN CIRCUIT BREAKER	
8	FEEDER CIRCUIT BREAKERS	
9	ANALOG SIGNAL SURGE SUPPRESSORS	
10	RELAYS & RELAY SOCKETS	
11	ANALOG SIGNAL INTERFACE MODULE	ALLEN BRADLEY 1492-RAIFM WITH FUSE CLIPS AND CABLE, OR EQUAL
12	DISCRETE INPUT INTERFACE MODULE	ALLEN BRADLEY 1492-RIFM, ISOLATED, WITH LED STATUS, OR EQUAL
13	DISCRETE OUTPUT INTERFACE MODULE	ALLEN BRADLEY 1492-RIFM, ISOLATED, WITH LED STATUS, OR EQUAL
14	CONVENIENCE RECEPTACLE	
15	8-PORT MANAGED NETWORK SWITCH	COMPONENT Y76
16	NOT USED	
17	24 VDC POWER SUPPLY UNIT	
18	12 VDC BATTERIES, QTY=2	
19	MAIN SURGE SUPPRESSOR	

W1 BOOSTER PUMP STATION CONTROL PANEL (1 / 16)

NTS

NOTES:

A. ITEMS IDENTIFIED ABOVE WITH A COMPONENT NUMBER ARE SPECIFIED IN SECTION 40 95 00 PROCESS CONTROL SYSTEMS. THE COMPONENT NUMBER REFERENCES A COMPONENT SPECIFICATION PROVIDED AS AN ATTACHMENT TO SECTION 40 95 00.

B. DISTRIBUTE PLC I/O OVER SEVERAL MODULES TO AVOID DISABLING PROCESS FUNCTION DUE TO SINGLE MODULE FAILURE.

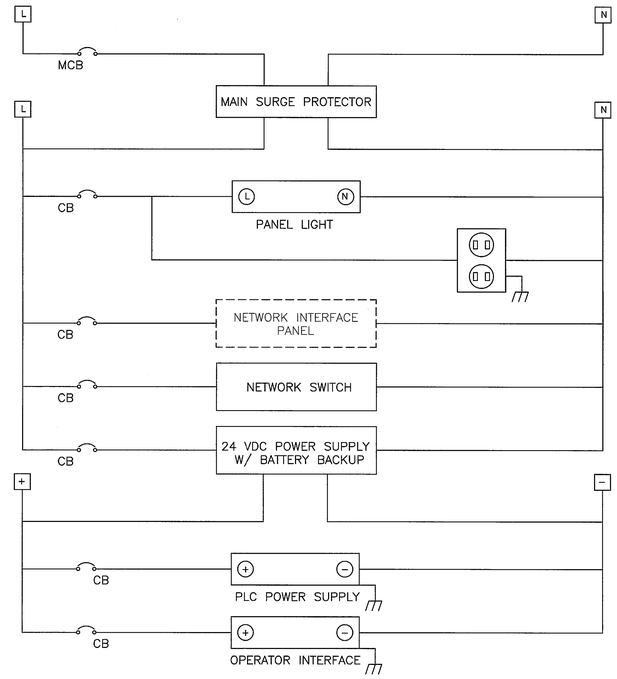

POWER DISTRIBUTION - BOOSTER PUMP CONTROL PANEL

NTS

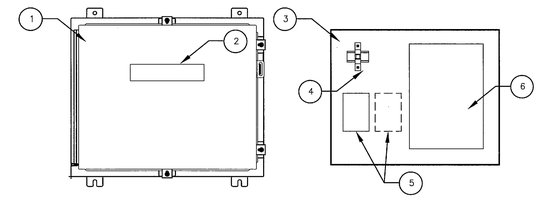

ENCLOSURE FACE ELEVATION

INTERIOR PANEL ELEVATION

ITEM No.	DESCRIPTION	SPECIFICATION
1	ENCLOSURE	NEMA 3R, SST, W/ 3-POINT LATCH
2	PANEL NAMEPLATE	ENGRAVE-'NETWORK INTERFACE PANEL'
3	PANEL AND ACCESSORIES	CARBON STEEL, PAINTED WHITE, BAKED-ENAMEL FINISH
4	MAIN CIRCUIT BREAKER	
5	MEDIA CONVERTER	COMPONENT Y87
6	LIGHT INTERFACE UNIT	COMPONENT Y85

NETWORK INTERFACE PANEL (2 / 16)

NTS

NOTES:

A. ITEMS IDENTIFIED ABOVE WITH A COMPONENT NUMBER ARE SPECIFIED IN SECTION 40 95 00 PROCESS CONTROL SYSTEMS. THE COMPONENT NUMBER REFERENCES A COMPONENT SPECIFICATION PROVIDED AS AN ATTACHMENT TO SECTION 40 95 00.

B. INSTALL WALL MOUNTED ADJACENT TO THE CONTROL PANEL

C. POWER SUPPLIED BY BOOSTER PUMP CONTROL PANEL

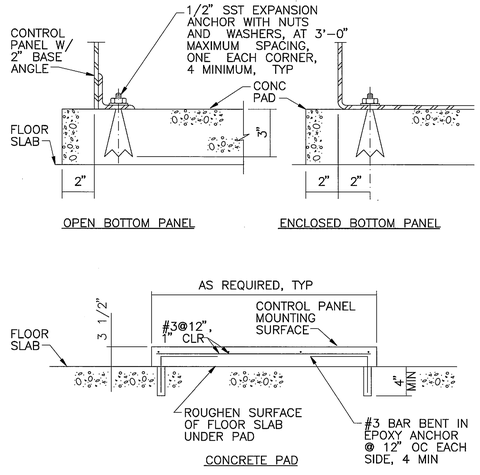

OPEN BOTTOM PANEL

ENCLOSED BOTTOM PANEL

CONCRETE PAD

STANDARD FREESTANDING PANEL MOUNTING (2 / 16)

NTS

THIS SPACE RESERVED

SYM	ZONE	DESCRIPTION	DATE	APPROVED
A		ADDED SHEET-INITIAL RELEASE TO EDC	12/05/11	KJM

REVISIONS

THIS DRAWING CREATED IN AUTOCAD 2010 FILE FORMAT AND WILL BE REVISED ONLY ON AN AUTOCAD SYSTEM. FILE: 14000189-DP5-I06.DWG

JONES EDMUNDS

730 NE WALDO ROAD, GAINESVILLE, FLORIDA 32641 / (352) 377-5821
3910 S WASHINGTON AVE, SUITE 210, TITUSVILLE, FLORIDA 32780 / (321) 269-2950

SIGNATURES	DATE
DRAWN D. FITZGERALD	12/05/11
CHECKED M CLARK	12/05/11
SUBMITTED D. FITZGERALD	12/05/11
ST of LICENSURE: FL LICENSE NO: 40976	
APPROVED M. CLARK	12/5/11
Fnt. L. KIEL	12/9/11

NATIONAL AERONAUTICS AND SPACE ADMINISTRATION
JOHN F. KENNEDY SPACE CENTER, NASA
KENNEDY SPACE CENTER, FLORIDA

REVITALIZE WATER & WASTEWATER SYSTEMS - VOLUME 5 OF 5
W1 PUMP STATION REPLACEMENT

PANEL DRAWINGS AND MOUNTING DETAILS

FILE NO.	SIZE	DWG. NO.	REV
	F	79K38877 VOL 5	A

PROJ. NO. 96968.3 SHEET 66

16

D. P. FITZGERALD, INC.
Water & Wastewater Treatment
Process Controls
Alachua, Florida COA 8991

ESC FORM 1-11 (3/76)(C/G 3/94)

NOTICE: When Government drawings, specifications, or other data are used for any purpose other than in connection with a definitely related Government procurement operation, the United States Government thereby incurs no responsibility nor obligation whatsoever; and the fact that the Government may have formulated, furnished, or in any way supplied the said drawings, specifications or other data is not to be regarded by implication or otherwise as in any manner licensing the holder or any other person or corporation, or conveying any rights or permission to manufacture, use, or sell any patented invention that may in any way be related thereto.

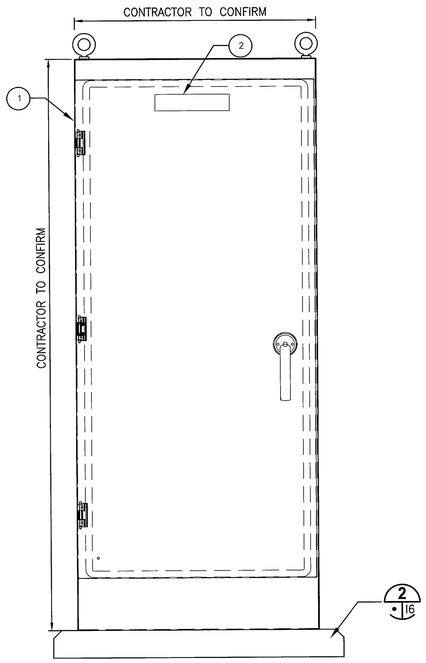

ENCLOSURE FACE ELEVATION

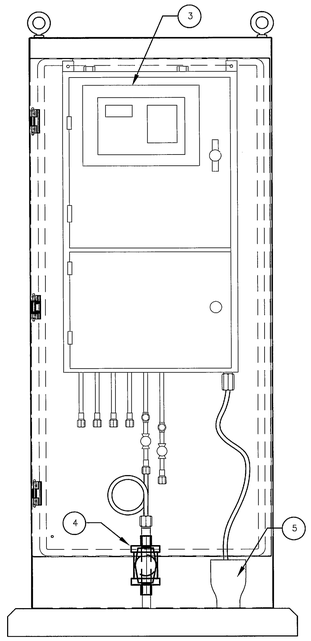

INTERIOR PANEL ELEVATION

ITEM No.	DESCRIPTION	SPECIFICATION
1	ENCLOSURE	NEMA 3R, SST UN-FINISHED, W/ 3-POINT LATCH
2	NAMEPLATE	ENGRAVE 'SUPPLY WATER QUALITY ANALYZER' OR 'DISTRIBUTED WATER QUALITY ANALYZER' AS APPROPRIATE
3	UV PERCENT TRANSMISSION ANALYZER	COMPONENT A300
4	SAMPLE LINE ISOLATION VALVE	1/2-INCH BALL VALVE
5	HUB DRAIN	2-INCH

W1 PUMP STATION WATER QUALITY ANALYZER PANEL

1 / 17

NTS

NOTES:

A. ITEMS IDENTIFIED ABOVE WITH A COMPONENT NUMBER ARE SPECIFIED IN SECTION 40 95 00 PROCESS CONTROL SYSTEMS. THE COMPONENT NUMBER REFERENCES A COMPONENT SPECIFICATION PROVIDED AS AN ATTACHMENT TO SECTION 40 95 00.

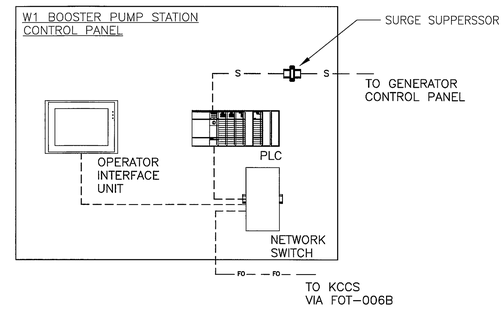

COMMUNICATION BLOCK DIAGRAM

NTS

NOTES:

A. PROVIDE AND INSTALL A SURGE SUPPRESSOR LOCATED IN THE GENERATOR CONTROL PANEL CONNECTED TO THE SERIAL COMMUNICATION CABLE.

THIS SPACE RESERVED

SYM	ZONE	DESCRIPTION	DATE	APPROVED
A		ADDED SHEET - INITIAL RELEASE TO EDC	12/05/11	KM

REVISIONS

THIS DRAWING CREATED IN AUTOCAD 2010 FILE FORMAT AND WILL BE REVISED ONLY ON AN AUTOCAD SYSTEM. FILE: 14000189-DP5-I07.DWG

JONES EDMUNDS
730 NE WALDO ROAD, GAINESVILLE, FLORIDA 32641 / (352) 377-5821
3910 S WASHINGTON AVE, SUITE 210, TITUSVILLE, FLORIDA 32780 / (321) 269-2950

SIGNATURES	DATE
DRAWN D. FITZGERALD	12/05/11
CHECKED M. CLARK	12/05/11
SUBMITTED D. FITZGERALD	12/05/11
ST of LICENSURE: FL LICENSE NO: 40976	
APPROVED M. CLARK	12/5/11
FOR L. KIEL	12/9/11

NATIONAL AERONAUTICS AND SPACE ADMINISTRATION
JOHN F. KENNEDY SPACE CENTER, NASA
KENNEDY SPACE CENTER, FLORIDA

REVITALIZE WATER & WASTEWATER SYSTEMS - VOLUME 5 OF 5
W1 PUMP STATION REPLACEMENT
DETAIL

FILE NO.	SIZE	DWG. NO.	REV
	F	79K38877 VOL 5	A

PROJ. NO. 96968.3 | SHEET 67 OF 67

I7