NOTICE: When Government drawings, specifications, or other data are used for any purpose other than in connection with a definitely related Government procurement operation, the United States Government thereby incurs no responsibility nor obligation whatsoever; and the fact that the Government may have formulated, furnished, or in any way supplied the said drawings, specifications or other data is not to be regarded by implication or otherwise as in any manner licensing the holder or any other person or corporation, or conveying any rights or permission to manufacture, use, or sell any patented invention that may in any way be related thereto.

SPECIFICATION REFERENCE NO 79K38880

REVITALIZE WATER & WASTEWATER SYSTEMS

KARS PARK I

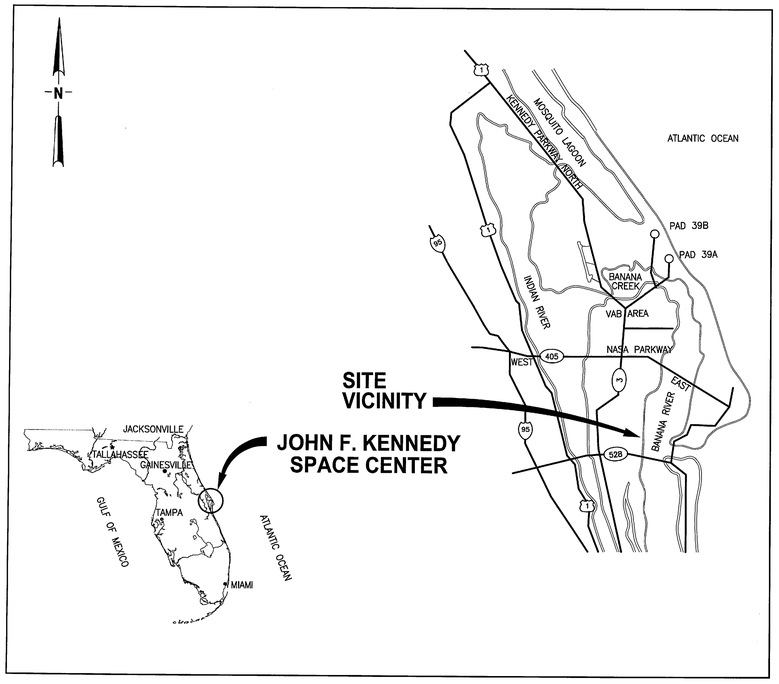

SITE VICINITY MAP

NTS

NASA
JOHN F. KENNEDY
SPACE CENTER

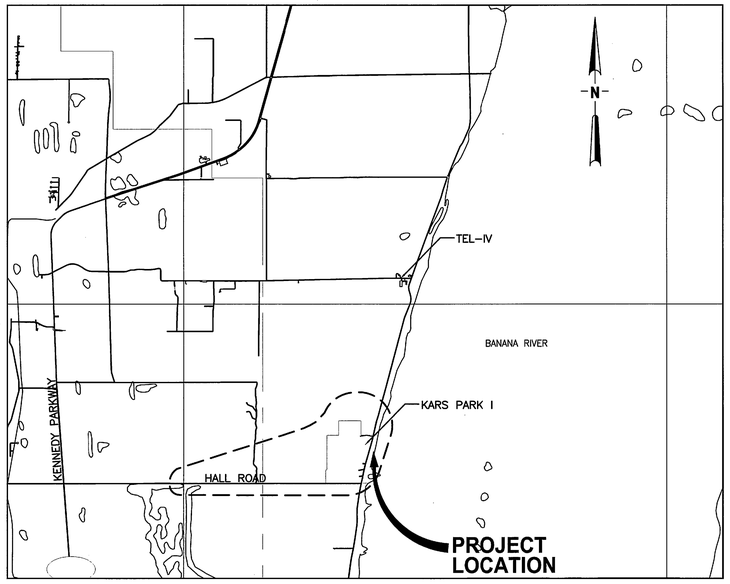

PROJECT LOCATION MAP

NTS

Previous Water & Wastewater Packages - For Historical Tracking Only

PCN	Title	Document Type	Associated Study/Drawing/Spec Numbers
901961	Kennedy Space Center Water Distribution System	System Drawing	81K00694
902352	KSC Sanitary Sewer Collection System	System Drawing	81K00695
98307	Water Consumption Analysis Study	Study Report	KSC–TA–7292
98497	Kennedy Space Center Wastewater System Study Phase I	Study Report	KSC–DX–8046
98497.1	KSC Wastewater Study Phase II	Study Report	KSC–TA–8906
96968.2	Upgrade KSC Water and Wastewater Systems, Phase 3 – Water System Condition Assessment and Regional Modeling Report	Study Report	KSC–TA–10385
96968	Revitalize and Upgrade KSC Water & Wastewater Systems	Contract Documents	79K36173; 79K36174; 79K36255; 79K36256; 79K36257
96968.1	Upgrade KSC Water and Wastewater Systems, Phase 2	Contract Documents	79K38517; 79K38518; 79K38648; 79K38649; 98K05225
98814	Revitalize KSC Water Systems	Contract Documents	79K38699; 79K38700; 79K38701; 79K38702; 79K38720; 79K38721
98815	Revitalize KSC Wastewater Systems	Contract Documents	79K38703; 79K38704
96968.3	Revitalize Water & Wastewater Systems	Contract Documents	79K38877; 79K38878; 79K38879; 79K38880

NASA KSC Export Control Office (ECO)
Export/SBU Determination Record
EDDR#

TITLE OF DOCUMENT:
79K38879 Rev B

SENSITIVE BUT UNCLASSIFIED (SBU)
INSTRUCTIONS: This item must be reviewed under the requirements for "Sensitive But Unclassified Information" as described in NPR 1600.1, Chapter 5.24 http://nodis3.gsfc.nasa.gov/main_lib.html

	Yes	No	SBU Reviewer's Signature	Date
Document contains SBU?	☐	☒		3/12/2012

EXPORT CONTROL (EC)
INSTRUCTIONS: If the document includes export-controlled data, contact your directorate Export Control Representative or the KSC ECO Help Desk (867-9209) for a determination of the proper export category.
http://exportcontrol.ksc.nasa.gov/index.cfm

ECO Reviewer's Name and Organization	ECO Reviewer's Signature	Date
Ping Yu / TAB3A		3/12/2012

	EXPORT DETERMINATION (☑ one box only)	
EAR 99 NLR	☒ EAR 99 NLR	The information contained in the document is technical in content, but is not technical data as defined by the ITAR or the EAR, and therefore is EAR 99 NLR (no export license required). [General Prohibition Six (Embargo) applies to all items subject to the EAR, i.e. items on the CCL and within EAR 99 NLR. You may not make an export or re-export contrary to the provisions of part 746 (Embargos and Other Special Controls) of the EAR and 22 CFR part 126.1 of the ITAR.]
EAR Controlled	☐	This document is within the purview of the Export Administration Regulations (EAR), 15 CFR 730-774, and is export controlled. It may not be transferred to foreign nationals in the U.S. or abroad without specific approval of a knowledgeable NASA export control official, and/or unless an export license or license exception is obtained/available from the Bureau of Industry and Security, United States Department of Commerce. *Violations of these regulations are punishable by fine, imprisonment, or both.*
ITAR Controlled	☐	This document contains information which falls under the purview of the U.S Munitions List (USML), as defined in the International Traffic in Arms Regulations (ITAR), 22 CFR 120-130, and is export controlled. It shall not be transferred to foreign nationals, in the U.S. or abroad, without specific approval of a knowledgeable NASA export control official, and/or unless an export license or license exemption is obtained/available from the United States Department of State *Violations of these regulations are punishable by fine, imprisonment, or both.*

(Stamp Revision: (05-19-2009)

THIS SPACE RESERVED

SYM	ZONE	DESCRIPTION	DATE	APPROVED
B		REVISED SHEETS 1–2, 25, AND 28–30	02/24/12	
A		REVISED DRAWINGS 1–52	10/31/11	

REVISIONS

THIS DRAWING CREATED IN AUTOCAD 2010 FILE FORMAT AND WILL BE REVISED ONLY ON AN AUTOCAD SYSTEM. FILE: 14000189–V01.DWG

JONES EDMUNDS
730 NE WALDO ROAD, GAINESVILLE, FLORIDA 32641 / (352) 377-5821
3910 S WASHINGTON AVE, SUITE 210, TITUSVILLE, FLORIDA 32780 / (321) 269-2950

SIGNATURES	DATE
DRAWN J. ALLEN	12/05/11
CHECKED B. MARTIN	12/05/11
SUBMITTED M. CLARK	12/05/11
APPROVED R. KOLLER	
K. MILLER	3-9-12
P.Y. YU	3/12/12

NATIONAL AERONAUTICS AND SPACE ADMINISTRATION
JOHN F. KENNEDY SPACE CENTER, NASA
KENNEDY SPACE CENTER, FLORIDA

REVITALIZE WATER & WASTEWATER SYSTEMS - KARS PARK I

COVER SHEET

FILE NO.	SIZE	DWG. NO.	REV
	F	79K38879	B
PROJ. NO. 96968.3		SHEET 1 of 52	

V1

KSC FORM 1-11 (3/76)(C/G 3/94)

NOTICE: When Government drawings, specifications, or other data are used for any purpose other than in connection with a definitely related Government procurement operation, the United States Government thereby incurs no responsibility nor obligation whatsoever; and the fact that the Government may have formulated, furnished, or in any way supplied the said drawings, specifications or other data is not to be regarded by implication or otherwise as in any manner licensing the holder or any other person or corporation, or conveying any rights or permission to manufacture, use, or sell any patented invention that may in any way be related thereto.

INDEX

REV	INDEX	DWG. NO	DESCRIPTION
GENERAL			
B	1	V1	COVER SHEET
B	2	V2	GENERAL NOTES, SURVEY NOTES AND DRAWING INDEX
A	3	V3	ABBREVIATIONS AND LEGENDS
A	4	V4	KEY MAP
ENVIRONMENTAL			
A	5	EN1	SWMU CONTAMINANTS AND ENVIRONMENTAL NOTES
CIVIL			
A	6	C1	EAST GUN CLUB SEPTIC TANK REPLACEMENT PLAN
A	7	C2	WEST GUN CLUB SEPTIC TANK REPLACEMENT PLAN
A	8	C3	WATER MAIN ROUTING PLAN
A	9	C4	WATER MAIN ROUTING PLAN
A	10	C5	WATER MAIN ROUTING PLAN
A	11	C6	WATER MAIN ROUTING PLAN
A	12	C7	WATER MAIN ROUTING PLAN
A	13	C8	WATER MAIN ROUTING PLAN
A	14	C9	WASTEWATER ROUTING PLAN
A	15	C10	WASTEWATER ROUTING PLAN
A	16	C11	WASTEWATER ROUTING PLAN
A	17	C12	WASTEWATER ROUTING PLAN
A	18	C13	WASTEWATER ROUTING PLAN
A	19	C14	WASTEWATER ROUTING PLAN
A	20	C15	WASTEWATER ROUTING PLAN
A	21	C16	WASTEWATER ROUTING PLAN
A	22	C17	WASTEWATER ROUTING PLAN
A	23	C18	WASTEWATER ROUTING PLAN
A	24	C19	WASTEWATER ROUTING PLAN
B	25	C20	DETAILS
A	26	C21	DETAILS
A	27	C22	DETAILS
B	28	C23	DETAILS
B	29	C24	DETAILS
B	30	C25	DETAILS
A	31	C26	STORMWATER POLLUTION PREVENTION DETAILS
A	32	C27	DETAILS
A	33	C28	DETAILS
STRUCTURAL			
A	34	S1	STRUCTURAL DETAILS
MECHANICAL			
A	35	M1	MASTER LIFT STATION PLAN AND SECTION
A	36	M2	GRINDER LIFT STATION PLAN AND SECTION
A	37	M3	DOSING STATION PLAN AND SECTION
A	38	M4	GRAVITY SEWER MANHOLE AND SEWER DETAILS
A	39	M5	MECHANICAL DETAILS
A	40	M6	MECHANICAL DETAILS
ELECTRICAL			
A	41	E1	ELECTRICAL LEGENDS
A	42	E2	ABBREVIATIONS AND GENERAL NOTES
A	43	E3	ONE-LINE DIAGRAMS AND LIFT STATION DATA TABLE
A	44	E4	LIFT STATION 1 ELECTRICAL AND KCCS CONNECTION PLAN
A	45	E5	GRINDER PUMP WASTEWATER LIFT STATION ELECTRICAL PLANS
A	46	E6	EAST AND WEST GUN CLUB DOSING STATION ELECTRICAL PLANS
A	47	E7	ELECTRICAL DETAILS
A	48	E8	ELECTRICAL DETAILS
INSTRUMENTATION AND CONTROL			
A	49	I1	INSTRUMENTATION AND CONTROLS LEGEND SHEET 1 OF 2
A	50	I2	INSTRUMENTATION AND CONTROLS LEGEND SHEET 2 OF 2
A	51	I3	P ID AND SEQUENCE OF OPERATION – GENERAL LIFT STATIONS
A	52	I4	PANEL DRAWINGS AND MOUNTING DETAILS

CONSTRUCTION SEQUENCING

A. OBTAIN BREVARD COUNTY HEALTH DEPT (OSTOS) PERMIT FOR SEPTIC SYSTEM REPLACEMENT (SHEETS C1 AND C2).

B. CONSTRUCT SEPTIC SYSTEM REPLACEMENTS (SHEETS C1 AND C2).

C. BREVARD COUNTY HEALTH DEPT APPROVED OSTDS CONSTRUCTION.

D. CONSTRUCT ALL OTHER WATER AND WASTEWATER IMPROVEMENTS.

E. OBTAIN APPROVAL FROM UTILITIES AND FDEP (CERTIFICATION AND COMPLETION OF AS BUILTS).

F. TIE INTO EXISTING KARS PARK WATER AND WASTEWATER SYSTEMS.

GENERAL NOTES

1. TOPOGRAPHIC SURVEY INFORMATION PROVIDED BY KUGELMANN LAND SURVEYING, INC. DATED JUNE, 2011. BASED ON THE AGE OF THE SURVEY, THE CONTRACTOR SHALL DOCUMENT ANY SITE CHANGES PRIOR TO CONSTRUCTION.

2. THE CONTRACTOR SHALL PROVIDE ACCESS TO ALL FACILITIES THROUGHOUT THE CONTRACT PERIOD.

3. SITE SOIL BORINGS HAVE BEEN PERFORMED (BY UNIVERSAL ENGINEERING SERVICES 11/30/00) AS SHOWN ON THE DRAWINGS AND ARE PROVIDED FOR INFORMATION ONLY.

4. LOCATIONS, ELEVATIONS, AND DIMENSIONS OF EXISTING UTILITIES, STRUCTURES, AND OTHER FEATURES ARE SHOWN BASED ON THE BEST INFORMATION AVAILABLE AT THE TIME OF PREPARATION OF THESE DRAWINGS BUT ARE NOT PURPORTED TO BE ABSOLUTELY CORRECT. THERE MAY BE OTHER IMPROVEMENTS, UTILITIES, ETC. WHICH ARE WITHIN THE PROJECT AREA. CONTRACTOR SHALL VERIFY, PRIOR TO CONSTRUCTION, THE LOCATIONS, ELEVATIONS, AND DIMENSIONS OF ALL EXISTING UTILITIES, STRUCTURES, AND OTHER FEATURES (WHETHER OR NOT SHOWN ON THE DRAWINGS) AFFECTING HIS WORK.

5. FIELD CONDITIONS MAY NECESSITATE SLIGHT ALIGNMENT AND GRADE DEVIATION OF THE PROPOSED UTILITIES TO AVOID OBSTACLES, AS REQUIRED. THE CONTRACTOR SHALL CONSTRUCT THE PROPOSED FACILITIES TO THE REQUIRED DEVIATION AS APPROVED BY THE CONTRACTING OFFICER WITHOUT INCREASE IN THE CONTRACT PRICE OR TIME.

6. THE CONTRACTOR SHALL FIELD VERIFY EXISTING UTILITIES AND STRUCTURES, (SIZE, ELEVATION, MATERIAL OF CONSTRUCTION, ETC.) ESPECIALLY AT CONNECTING POINTS, PRIOR TO SHOP DRAWING PREPARATION AND SUBMITTAL. CONTRACTOR SHALL INCLUDE FIELD MEASUREMENTS ON SHOP DRAWINGS.

7. THE CONTRACTOR SHALL COORDINATE THE RELOCATION OF CONFLICTING UNDERGROUND UTILITIES AS NEEDED WITH THE CONTRACTING OFFICER.

8. THE CONTRACTOR SHALL NOTE THAT OVERHEAD UTILITIES MAY NOT BE SHOWN ON THE DRAWINGS. THE CONTRACTOR SHALL FIELD LOCATE AND INCLUDE CONSIDERATION OF SUCH UTILITIES IN PLANNING AND EXECUTING HIS WORK.

9. ALL EXISTING STORMWATER DRAINAGE PATTERNS AND CHANNELS ARE TO BE MAINTAINED. THE CONTRACTOR SHALL NOTIFY THE CONTRACTING OFFICER IF THE WORK APPEARS TO INTERRUPT AN EXISTING STORMWATER DRAINAGE PATTERN. THE CONTRACTOR SHALL MAINTAIN A CLEAR PATH FOR ALL SURFACE WATER DRAINAGE STRUCTURES AND DITCHES DURING ALL PHASES OF CONSTRUCTION AND SHALL USE WHATEVER MEANS NECESSARY TO MANAGE STORMWATER SUCH THAT IMPACT TO CONSTRUCTION AND/OR SURROUNDING FACILITIES IS MINIMIZED. CONTRACTOR SHALL BE RESPONSIBLE FOR ANY EROSION, SEDIMENT TRANSPORT, DISTURBED FOUNDATIONS AND IMPACT TO STRUCTURES, AND ANY OTHER DAMAGE CAUSED DURING CONSTRUCTION. THE CONTRACTOR SHALL USE SEDIMENT AND EROSION CONTROL MEANS/DEVICES INCLUDING BUT NOT LIMITED TO ANCHORED HAY BALES, MULCH AND NETTING, FILTER CLOTH BARRIERS OR OTHER EROSION CONTROL METHODS APPROVED BY THE CONTRACTING OFFICER.

10. THE CONTRACTOR IS RESPONSIBLE FOR BRACING, SHORING, OR PROVIDING OTHER MEANS NECESSARY TO PROTECT AND SUPPORT EXISTING UTILITIES EXPOSED OR UNEXPOSED DURING CONSTRUCTION. THE CONTRACTOR IS TO PROVIDE TEMPORARY SUPPORT FOR POWER OR LIGHT POLES AS REQUIRED FOR INSTALLATION OF NEW UTILITY.

11. THE CONTRACTOR SHALL TAKE WHATEVER MEANS NECESSARY TO PROTECT THE EXISTING ROADWAYS FROM DAMAGE. ANY DAMAGE TO EXISTING ROADWAYS SHALL BE REPAIRED BY THE CONTRACTOR IN ACCORDANCE WITH THE CONTRACT DOCUMENTS AND TO THE SATISFACTION OF THE CONTRACTING OFFICER AT NO ADDITIONAL COST TO THE GOVERNMENT.

12. THE CONTRACTOR SHALL HAND EXCAVATE WHEN CONSTRUCTION IS WITHIN 5 FEET OF EXISTING UTILITIES.

13. THE CONTRACTOR SHALL SUBMIT A WRITTEN PROPOSAL TO THE CONTRACTING OFFICER TO INDICATE THE UTILITY TO BE INTERRUPTED AND THE START DATE AND LENGTH OF EACH INTERRUPTION. NO SERVICE INTERRUPTIONS WILL BE PERMITTED WITHOUT REVIEW AND WRITTEN APPROVAL BY THE CONTRACTING OFFICER. THE CONTRACTOR MUST SCHEDULE, WITH THE CONTRACTING OFFICER, ANY INTERRUPTIONS IN A MANNER THAT WILL NOT DEGRADE THE PARK'S OPERATIONS TO AN UNACCEPTABLE LEVEL, INTERRUPT SERVICE FOR AN UNACCEPTABLY LONG PERIOD, OR CAUSE UNDUE HARDSHIP ON THE PARK. THE CONTRACTOR SHALL REPAIR/REPLACE INTERRUPTED SERVICES IN A MANNER, AND WITH MATERIALS, TO MATCH THE EXISTING FACILITY. THE CONTRACTOR SHALL EMPLOY ALL NECESSARY PRECAUTIONS TO PROTECT PARK GUESTS AND FACILITIES. THE CONTRACTOR SHALL COORDINATE ALL BLOCKAGE OF ROADWAYS, WALKWAYS, CAMPSITES, OR OTHER EXISTING FACILITIES WITH THE CONTRACTING OFFICER.

14. THE CONTRACTOR SHALL OBTAIN WRITTEN AUTHORIZATION FROM THE CONTRACTING OFFICER A MINIMUM OF 14 WORKING DAYS PRIOR TO INTERRUPTING WATER, SEWER OR ELECTRICAL SERVICE.

15. THE CONTRACTOR SHALL MAKE ALL CONNECTIONS TO NEW AND EXISTING LINES AS SHOWN ON THE DRAWINGS AND SHALL FURNISH ALL LABOR AND MATERIALS NECESSARY TO COMPLETE THE WORK.

16. THE CONTRACTOR SHALL REINSTALL OR REPLACE ALL SIGNS MOVED OR DAMAGED DURING CONSTRUCTION.

17. TEMPORARY BLOW-OFFS AND 2 INCH JUMPER CONNECTIONS SHALL BE PROVIDED AND INSTALLED BY THE CONTRACTOR AS NECESSARY. THESE DEVICES SHALL ACT AS FLUSH FACILITIES DURING TESTING OPERATIONS AND SHALL BE REMOVED BY THE CONTRACTOR AFTER TESTS ARE APPROVED.

18. THE CONTRACTOR SHALL DISINFECT POTABLE WATER LINES THAT HAVE BEEN RELOCATED OR REPAIRED AS A RESULT OF CONSTRUCTION ACTIVITIES.

19. ALL WATER FOR TESTING SHALL BE POTABLE. WATER SHALL BE FURNISHED BY THE GOVERNMENT AT NO COST TO THE CONTRACTOR.

20. ALL WATER USED FOR CONSTRUCTION SHALL PASS THROUGH A CERTIFIED BACKFLOW PREVENTER AND CITY OF COCOA PROVIDED METER. CONTRACTOR IS RESPONSIBLE FOR ALL CITY OF COCOA UTILITIES FEES AND DEPOSITS. CITY OF COCOA LINES (STA 0 TO 2+30) SHALL BE SWABBED WITH A 'PIG' PRIOR TO OPERATION.

21. WATER REMOVAL:

A. WATER SHALL NOT BE PERMITTED TO ACCUMULATE IN EXCAVATIONS. DEWATERING SYSTEMS SHALL BE PROVIDED BY THE CONTRACTOR TO CONVEY WATER AWAY FROM EXCAVATIONS SO THAT SOFTENING OF FOUNDATION BOTTOM, FOOTING UNDERCUTTING, AND SOIL CHANGES DETRIMENTAL TO SUBGRADE STABILITY AND FOUNDATION DO NOT OCCUR. DEWATERING EFFLUENT WILL BE RETAINED ON SITE OR SHEET FLOW ONTO UPLANDS AND ALLOWED TO PERCOLATE TO GROUND WATER. THERE SHALL BE NO DISCHARGE TO SURFACE WATERS. DEWATERING SYSTEMS AND METHODS OF DISPOSAL SHALL BE APPROVED BY THE CONTRACTING OFFICER.

B. SOIL EROSION CONTROL:
THE CONTRACTOR SHALL PREVENT THE DISCHARGE OF SEDIMENT INTO DRAINAGE DITCHES DUE TO CONSTRUCTION OPERATIONS. APPROVED EROSION CONTROL DEVICES SHALL BE INSTALLED TO PREVENT DISCHARGE OF SEDIMENT INTO A DRY OR WET WATERCOURSE. EROSION CONTROL SHALL CONSIST OF ANCHORED HAY BALES, MULCH AND NETTING, FILTER CLOTH BARRIERS OR OTHER EROSION CONTROL METHODS APPROVED BY THE CONTRACTING OFFICER.

C. TURBIDITY CONTROLS:
THE CONTRACTOR SHALL COMPLY WITH THE TURBIDITY CONTROL REQUIREMENTS OF THE ENVIRONMENTAL PERMIT(S), WHICH AT A MINIMUM MAY INCLUDE USING TURBIDITY CURTAINS. THE CONTRACTOR SHALL PREVENT INCREASES IN TURBIDITY IN EXCESS OF WATER QUALITY.

22. DEFLECTION OF PIPE AT JOINTS SHALL NOT EXCEED 75% OF THE MANUFACTURER'S RECOMMENDED MAXIMUM DEFLECTION. MINIMUM BENDING RADIUS SHALL BE 25% GREATER THAN THE MANUFACTURER'S RECOMMENDED MINIMUM BENDING RADIUS.

23. UNLESS OTHERWISE NOTED, REFERENCES TO FDOT SPECIFICATIONS SHALL REFER TO FLORIDA DEPARTMENT OF TRANSPORTATION "STANDARD SPECIFICATIONS FOR ROAD AND BRIDGE CONSTRUCTION", 2010. FDOT INDICES SHALL REFER TO THE "2010 FLORIDA DEPARTMENT OF TRANSPORTATION ROADWAY AND TRAFFIC DESIGN STANDARDS." THE CONTRACTOR SHALL PROVIDE CONTROL AND MAINTENANCE OF TRAFFIC IN ACCORDANCE WITH FDOT INDEX 600 THROUGH 665.

24. THIS PROJECT INVOLVES EXCAVATION AROUND SEVERAL TYPES OF EXISTING UNDERGROUND UTILITIES (WATER MAINS, ELECTRIC LINES, COMMUNICATION LINES, ETC.). THE CONTRACTOR SHALL LOCATE AND VERIFY THE UTILITIES PRIOR TO SHOP DRAWING PREPARATION AND SUBMITTAL. CONTRACTOR SHALL INCLUDE FIELD MEASUREMENTS ON SHOP DRAWINGS. DURING THE COURSE OF THE WORK THE CONTRACTOR SHALL BE RESPONSIBLE FOR THE PROTECTION OF ALL PERSONNEL AND PROPERTY EFFECTED BY SUCH WORK. THERE ARE UNTRACEABLE UTILITIES (LOW VOLTAGE ELECTRIC, POTABLE WATER, ETC.) LOCATED THROUGHOUT THE PARK.

25. NO WORK SHALL BEGIN UNTIL ALL ENVIRONMENTAL PERMITS ARE APPROVED BY FDEP AND PROVIDED BY THE CO TO THE CONTRACTOR. THE CONTRACTOR SHALL ADHERE TO ALL PERMIT REQUIREMENTS. THE CONTRACTOR SHALL OBTAIN A PERMIT FROM THE BREVARD COUNTY DEPARTMENT OF HEALTH FOR ABANDONMENT/DECOMMISSIONING OF THE SEPTIC SYSTEMS. THE CONTRACTOR SHALL PROVIDE A COPY OF THE PERMIT TO THE CO AND NASA ENVIRONMENTAL (PERMITTING AND COMPLIANCE OFFICE).

26. A BOLLARD SHALL BE PROVIDED ON EACH SIDE OF DITCH CROSSINGS. A SIGN SHALL BE PROVIDED ON ONE SIDE OF DITCH CROSSINGS. BOLLARDS AND SIGNS SHALL BE LOCATED AS DIRECTED BY THE CONTRACTING OFFICER.

27. AT DITCH CROSSINGS, THE CONTRACTOR SHALL INSTALL THE PRESSURE PIPING BY DEFLECTING THE HDPE PIPE UNDER THE DITCH RATHER THAN USING EXTRA FITTINGS, EXCEPT WHERE OTHERWISE INDICATED ON THE DRAWINGS. SHOULD CIRCUMSTANCES BE SUCH THAT THE PRESSURE PIPE CAN NOT BE INSTALLED UNDER A DITCH BY DEFLECTION OF THE PIPE ALONE, THE PRESSURE PIPE SHALL BE INSTALLED IN CONFORMANCE WITH THE DITCH CROSSING DETAIL SHOWN ON THE DRAWINGS.

28. THE CONTRACTOR MAY SUBMIT A WRITTEN PROPOSAL AND SHOP DRAWINGS TO THE CONTRACTING OFFICER TO DIRECTIONAL DRILL NEW WATER MAINS AND FORCE MAINS THAT ARE SPECIFIED TO BE OPEN CUT. ADDITIONAL DIRECTIONAL DRILLING INSTALLATIONS WILL NOT BE PERMITTED WITHOUT REVIEW AND WRITTEN APPROVAL BY THE CONTRACTING OFFICER. IN THE EVENT THAT ADDITIONAL DIRECTIONAL DRILLING IS PERFORMED, SOME SILT FENCING MAY BE DELETED IN UNDISTURBED AREAS. ALL DIRECTIONAL DRILLING 'SET UP AREAS' THAT ARE DISTURBED WILL STILL UTILIZE SILT FENCING.

29. CONTRACTOR SHALL SOD ALL DISTURBED AREAS UNLESS NOTED OTHERWISE. SODDING SHALL BE AS SPECIFIED.

30. REFER TO DRAWING 79K19533. "WATERLINE TO KARS PARK" FOR AS-BUILT INFORMATION ON THE EXISTING WATERLINE.

31. COORDINATE SITE ACCESS WITH PARK MANAGER AND CONTRACTING OFFICER. ACCESS TO TEL IV AND BANANA RIVER DRIVE NORTH OF THE GUN CLUB MAY BE LIMITED.

32. ALL COORDINATE POINTS ARE MEASURED AT CENTER OF STRUCTURE. CONTRACTOR SHALL REESTABLISH A BASELINE FOR ALL STATIONING.

33. PRIOR TO WATER MAIN AND FORCE MAIN TIE IN THE CONTRACTOR SHALL SCHEDULE PRECONSTRUCTION MEETINGS WITH THE CITY OF COCOA AND BREVARD COUNTY.

34. DURING CONNECTIONS TO EXISTING ACTIVE WATER MAIN MAINTAIN PRESSURE IN ACTIVE WATER MAINS OF NOT LESS THAN 20 PSI. NO OUTAGE WILL BE ALLOWED DURING ALL PHASES OF CONSTRUCTION.

35. CONTRACTOR SHALL RETAIN ON THE WORK SITE, COPIES OF OF ANY PERMITS REQUIRED FOR CONSTRUCTION.

36. CONTRACTOR IS ADVISED NOT TO SCALE FROM DRAWINGS BUT TO FIELD VERIFY ALL DIMENSIONS. DIMENSIONS OF SPECIFIED & FURNISHED PRODUCTS AND MATERIALS TAKE PRECEDENCE OVER DIMENSIONS AND NOTES SHOWN ON THE DRAWINGS.

37. CONTRACTOR SHALL BE RESPONSIBLE FOR ANY DAMAGE TO UTILITIES, STRUCTURES, AND OTHER FEATURES CAUSED BY CONSTRUCTION ACTIVITIES.

38. CONTRACTOR SHALL VERIFY THAT ALL REQUIRED CLEARANCES CAN BE MET, AND IF ANY CANNOT BE MET, NOTIFY THE CONTRACTING OFFICER 15 DAYS PRIOR TO CONSTRUCTING ANY SUCH ITEM.

39. CONTRACTOR SHALL NOTIFY THE CONTRACTING OFFICER IN WRITING IMMEDIATELY WHEN CONFLICTS BETWEEN DRAWINGS AND ACTUAL CONDITIONS ARE DISCOVERED OR WHEN FACILITY CONFLICTS ARE IDENTIFIED DURING THE COURSE OF THE WORK.

40. CONTRACTOR SHALL PROVIDE AN "AS-BUILT" SURVEY PERFORMED BY A REGISTERED PROFESSIONAL LAND SURVEYOR SHOWING ALL MODIFICATIONS MADE DURING CONSTRUCTION. AN ELECTRONIC CADD FILE (IN .DWG, .DXF, OR .DGN FORMAT) OF AS-BUILT INFORMATION TO BE PROVIDED.

41. THE CONTRACTOR SHALL MEET BREVARD COUNTY AND CITY OF COCOA REQUIREMENTS WHERE APPLICABLE.

42. THE CONTRACTOR SHALL COMPLETE ALL SEPTIC SYSTEM RELATED WORK (DRAWINGS C1 & C2) AND HEALTH DEPARTMENT COMPLETION APPROVED PRIOR TO PERFORMING ANY OTHER WORK. THE CONTRACTOR IS RESPONSIBLE FOR OBTAINING ALL PERMIT(S) AND ASSOCIATED FEES REQUIRED FOR ALL SEPTIC SYSTEM RELATED WORK.

43. IF EXISTING SOIL IS CONTAMINATED AS INDICATED ON THE SWMU AND PRL CONTAMINANTS TABLES ON EN1, CONTRACTOR IS TO REPLACE SOIL WITH CLEAN FILL. B

44. THE CONTRACTOR SHALL LAY PIPE TO UNIFORM GRADE BETWEEN INDICATED ELEVATION POINTS CONTRACTOR SHALL TAKE CARE TO PROVIDE PROPER GRADE ELEVATIONS AND ALIGNMENTS.

45. RESTORATION AREAS SHOWN ON PLANS ARE FOR REFERENCE ONLY. FOR BIDDING PURPOSES CONTRACTOR SHALL DETERMINE LIMITS OF CONCRETE, LIMEROCK, ASPHALT, CURB, AND SIDEWALK RESTORATION BASED ON PLANNED INSTALLATION METHOD.

46. SEE SPECIFICATION SECTION 33 11 00 FOR PIPE HANGER REQUIREMENTS FOR THIS VOLUME. B

SURVEYOR'S NOTES

KUGELMANN LAND
SURVEYING, INC.
30 NORTH TROPICAL TRAIL
SUITE B
MERRITT ISLAND,
FLORIDA 32953
(321) 459-0930
L.B. NO. 6575

SURVEYOR'S CERTIFICATE
I HEREBY CERTIFY THAT THE SURVEY DEPICTED HEREON IS TRUE AND MEETS THE MINIMUM TECHNICAL STANDARDS SET FORTH BY THE FLORIDA BOARD OF PROFESSIONAL SURVEYORS & MAPPERS IN CHAPTER 61G17-6, FLORIDA ADMINISTRATIVE CODE, PURSUANT TO SECTION 472.027, FLORIDA STATUTES.
DAVID J. KUGELMANN P.L.S. NO. 5117
STATE OF FLORIDA
NOT VALID UNLESS SIGNED, DATED AND STAMPED WITH EMBOSSED SEAL

SURVEYOR'S NOTES

1. HORIZONTAL COORDINATES ARE REFERENCED TO THE FLORIDA STATE PLANE COORDINATE SYSTEM, EAST ZONE NORTH AMERICAN DATUM OF 1983, 1990 ADJUSTMENT AND ARE BASED ON UNITED STATES COAST & GEODETIC SURVEY MONUMENTS "REED" & "19-18 AZ2D MAMON" HAVING COORDINATES OF N=1487232.74, E=764119.01 & N=1487363.56, E=765000.62, RESPECTFULLY.

2. ELEVATIONS DEPICTED HEREON ARE REFERENCED TO THE NORTH AMERICAN VERTICAL DATUM OF 1988 AND ARE BASED ON UNITED STATES COAST & GEODETIC SURVEY MONUMENTS "REED" & "19-18 AZ2D MAMON" HAVING ELEVATIONS OF 4.21 FEET AND 2.25 FEET, RESPECTFULLY.

3. THE LOCATIONS OF UNDERGROUND UTILITIES AS SHOWN HEREON ARE BASED ON ABOVE-GROUND STRUCTURES AND MARKINGS PROVIDED BY CRAIG A. SMITH & ASSOCIATES LOCATIONS OF UNDERGROUND UTILITIES/STRUCTURES MAY VARY FROM LOCATIONS SHOWN HEREON. ADDITIONAL BURIED UTILITIES AND STRUCTURES MAY BE ENCOUNTERED. BEFORE BEGINNING EXCAVATIONS URS LOCATORS SHOULD BE CONTACTED FOR VERIFICATION OF UTILITY TYPE AND FOR FIELD LOCATIONS.

4. THIS SURVEY WAS PREPARED FOR THE EXCLUSIVE USE OF THE CLIENT (S) SHOWN HEREON; COPIES ARE VALID ONLY WHEN SIGNED, DATED AND EMBOSSED WITH THE SURVEYOR'S SEAL.

OFF-SITE UTILITY CONTACTS

BREVARD COUNTY HEALTH DEPARTMENTS (OSTDS)	SEAN FLYNN 321-633-2100
BREVARD COUNTY PUBLIC WORKS (ROW PERMITTING)	RICH SPYRKA 321-633-2065
BREVARD COUNTY UTILITIES SERVICES (WASTEWATER)	TAMMY HURLEY 321-633-2094
CITY OF COCOA (WATER)	LORNA ETTMAN 321-433-8795

THIS SPACE RESERVED

SYM	ZONE	DESCRIPTION	DATE	APPROVED
B		REVISED GENERAL NOTES, REVISED DRAWING INDEX	03/07/12	
A		GENERAL REVISIONS	12/05/11	

REVISIONS

THIS DRAWING CREATED IN AUTOCAD 2010 FILE FORMAT AND WILL BE REVISED ONLY ON AN AUTOCAD SYSTEM. FILE: 14000189-V02.DWG

JONES EDMUNDS
730 NE WALDO ROAD, GAINESVILLE, FLORIDA 32641 / (352) 377-5821
3910 S WASHINGTON AVE, SUITE 210, TITUSVILLE, FLORIDA 32780 / (321) 269-2950

SIGNATURES	DATE
DRAWN J. ALLEN	12/05/11
CHECKED R. BEST	12/05/11
SUBMITTED M. CLARK	12/05/11
ST of LICENSURE: FL LICENSE NO: 48898	
APPROVED M. CLARK	
K. MILLER	

NATIONAL AERONAUTICS AND SPACE ADMINISTRATION
JOHN F. KENNEDY SPACE CENTER, NASA
KENNEDY SPACE CENTER, FLORIDA

REVITALIZE WATER & WASTEWATER SYSTEMS - KARS PARK I

GENERAL NOTES, SURVEY NOTES AND DRAWING INDEX

FILE NO.	SIZE	DWG. NO.	REV
	F	79K38879	B
PROJ. NO. 96968.3		SHEET 2	

V2

NOTICE: When Government drawings, specifications, or other data are used for any purpose other than in connection with a definitely related Government procurement operation, the United States Government thereby incurs no responsibility nor obligation whatsoever; and the fact that the Government may have formulated, furnished, or in any way supplied the said drawings, specifications or other data is not to be regarded by implication or otherwise as in any manner licensing the holder or any other person or corporation, or conveying any rights or permission to manufacture, use, or sell any patented invention that may in any way be related thereto.

GENERAL ABBREVIATIONS

AC	ASBESTOS CONCRETE
AIP	ABANDONED IN PLACE
ALUM	ALUMINUM
APP	APPROVE, APPROVED
APPROX	APPROXIMATE
ARV	AIR RELEASE VALVE
ASTM	AMERICAN SOCIETY FOR TESTING AND MATERIALS
AWWA	AMERICAN WATER WORKS ASSOCIATION
BLD	BLIND
BLDG	BUILDING
BM	BENCH MARK
BTM	BOTTOM
C	COORDINATE POINT
CI	CAST IRON
CISP	CAST IRON SPOOL PIECE
CFM	CUBIC FEET PER MINUTE
C/L, ℄	CENTERLINE
C/M	CONSTRUCTION MONUMENT
CM	CENTIMETER
CMP	CORRUGATED METAL PIPE
CO	COMPANY / CONTRACTING OFFICER
COM	COMMUNICATION
CONC	CONCRETE
CONT	CONTINUOUS
CTRD	CENTERED
CV	CHECK VALVE
DES	DESIGNATION
DEPT	DEPARTMENT
DET	DETAIL
DI	DUCTILE IRON
DIA, ø	DIAMETER
DIP	DUCTILE IRON PIPE
DN	DOWN
DWG	DRAWING
E	EASTING
EA	EACH
EG	EXISTING GRADE
ELB	ELBOW
ELEC	ELECTRICAL
ELEV	ELEVATION
EOP	EDGE OF PAVEMENT
EOS	EDGE OF SLAB
EQ	EQUAL
EW	EACH WAY
EWC	ELECTRIC WATER COOLER
EXIST	EXISTING
°F	DEGREES FAHRENHEIT
FAC	FLORIDA ADMINISTRATIVE CODE
FDEP	FLORIDA DEPARTMENT OF ENVIRONMENTAL PROTECTION
FDOT	FLORIDA DEPARTMENT OF TRANSPORTATION
FFE	FINISHED FLOOR ELEVATION
FH	FIRE HYDRANT
FIG	FIGURE
FIN	FINISHED
FJ	FLANGED JOINT
FL	FLOOR
FLEX	FLEXIBLE
FLG	FLANGE
FPP	FIRE PROTECTION PIPING
FT	FOOT
FM	FORCE MAIN
GAL	GALLON
GALV	GALVANIZED
GFE	GOVERNMENT FURNISHED EQUIPMENT
GPM	GALLONS PER MINUTE
GR	GRADE
GS	GALVANIZED STEEL
GV	GATE VALVE
GWB	GYPSUM WALL BOARD
H	HIGH
HDPE	HIGH DENSITY POLYETHYLENE
HORIZ	HORIZONTAL
HT	HEIGHT
HW	HIGH WATER LEVEL
ID	INSIDE DIAMETER
IE	INVERT ELEVATION
INV	INVERT
IW	INDUSTRIAL WATER
KSC	KENNEDY SPACE CENTER
L	LITER
LBR	LIMEROCK BEARING RATIO
LBS	POUNDS
LC	LAUNCH COMPLEX
LF, L.F.	LINEAR FEET
LS	LIFT STATION
MAX	MAXIMUM
MECH	MECHANICAL
MFR	MANUFACTURER
MH	MANHOLE
MIN	MINIMUM
MISC	MISCELLANEOUS
MJ	MECHANICAL JOINT
MNPT	MALE NATIONAL PIPE THREAD
MTL	MATERIAL
N	NORTHING
N/A	NOT APPLICABLE
N/AVAIL	NOT AVAILABLE
NIC	NOT IN CONTRACT
No	NUMBER
NOM	NOMINAL
NTS	NOT TO SCALE
#	NUMBER DESIGNATION
OC	ON CENTER
OD	OUTSIDE DIAMETER
O.H.	OVERHEAD
OSHA	OCCUPATIONAL SAFETY AND HEALTH ADMINISTRATION
OSHA	OCCUPATIONAL SAFETY AND HEALTH ADMINISTRATION
OSTDS	ONSITE TREATMENT AND DISPOSAL SYSTEM
PE	PLAIN END
PI	POINT OF INTERSECTION
PIV	POST INDICATOR VALVE
POJ	PUSH ON JOINT
PPE	PERSONAL PROTECTIVE EQUIPMENT
PRL	POTENTIAL RELEASE LOCATION
PROTEC	PROTECTION
PRV	PRESSURE REDUCING VALVE
PSF	POUNDS PER SQUARE FOOT
PSI	POUNDS PER SQUARE INCH
PT	PRESSURE TREATED
PV	PLUG VALVE
PVC	POLYVINYL CHLORIDE
PWQ	PROCESS WASTE QUESTIONNAIRE
R	RADIUS
RCP	REINFORCED CONCRETE PIPE
REF	REFERENCE (INFORMATION OBTAINED FROM DRAWINGS BY OTHERS)
REQ	REQUIRED
RFF	REFERENCED FINISHED FLOOR
RMJ	RESTRAINED MECHANICAL JOINT
RP	REDUCED PRESSURE
RPBFP	REDUCED PRESSURE BACKFLOW PREVENTER
RPOJ	RESTRAINED PUSH-ON JOINT
R/W	RIGHT OF WAY
RUW	RECLAIMED WATER
S	SLOPE
SAN	SANITARY SEWER
SCH	SCHEDULE
SEC	SECTION
SF	SQUARE FEET
SHT	SHEET
SIM	SIMILAR
SPEC	SPECIFICATIONS, SPECIFIED
SQ	SQUARE
SS, SST	STAINLESS STEEL
STA	STATION
STAT	STATIONARY
STD	STANDARD
STL	STEEL
SWJ	SOLVENT WELD JOINT
SWMU	SOLID WASTE MANAGEMENT UNIT
T/	TOP OF
TBM	TEMPORARY BENCH MARK
TGS	THREADED GALVANIZED STEEL
TGSP	THREADED GALVANIZED STEEL PIPE
THRD	THREADED
THK	THICK
TOB	TOP OF BERM
TRP	TECHNICAL RESPONSE PACKAGE
TV	TELEVISION
TYP	TYPICAL
UL	UNDERWRITER'S LABORATORIES
UNO	UNLESS NOTED OTHERWISE
UG, U/G	UNDERGROUND
UGE	UNDERGROUND ELECTRICAL
VCP	VALVE CONTROL PANEL, VITRIFIED CLAY PIPE
VERT	VERTICAL
W	WEST
W/	WITH
WGT	WEIGHT
W/L	WATERLINE
WM	WATER MAIN
WT	WEIGHT
WWF	WELDED WIRE FABRIC

SURVEY LEGEND

BACK-FLOW PREVENTER	
BENCHMARK	
BOLLARD	
CURB INLET, STORM GRATE	
CONCRETE LIGHT POLE	
CLEAN-OUT (SANITARY)	
CONCRETE POWER POLE	
ELECTRIC MARKER	
ELECTRIC BOX	
ELECTRIC HANDHOLE	
ELECTRIC METER	
ELECTRIC MANHOLE	
ELECTRIC TRANSFORMER	
FIRE DEPARTMENT CONNECTION	
FIRE HYDRANT	
FIRE METER	
FIBER OPTIC CABLE MARKER	
FIBER OPTIC CABLE HANDHOLE	
GAS MARKER	
GAS METER	
GUY WIRE	
GAS VALVE, GATE VALVE	
INDICATOR VALVE	
LIGHT POLE	
MANHOLE, UNKNOWN	
MANHOLE, SANITARY SEWER	
MANHOLE, STORM SEWER	
MONITORING WELL	
PLUG VALVE	
POWER POLE	
STORM GRATE	
SIGN	
SEWER VALVE	
SPRINKLER HEAD	
TELEPHONE HANDHOLE	
TELEPHONE BOX	
TELEPHONE MARKER	
TELEPHONE MANHOLE	
TELEPHONE PEDESTAL	
TRAFFIC SIGNAL BOX	
TRAFFIC SIGNAL	
TRANSFORMER	
WATER METER	
WATER SPIGOT	
WATER VALVE	
WELL	
WOOD POWER POLE	
SOFT DIG	

CONCRETE	
FENCELINE	
TREELINE	
UNDERGROUND CABLE TV	UGTV
UNDERGROUND ELECTRIC	UGE
UNDERGROUND FIBER OPTIC CABLE	FOC
UNDERGROUND UNKNOWN UTILITY	
UNDERGROUND GAS	GAS
RAILROAD	
SANITARY SEWER	SAN
SANITARY FORCEMAIN	SFM
SITE FEATURE	
STEAMLINE	STM
STORM SEWER	
UNDERGROUND WATER	UGW
UNDERGROUND CHILLED WATER	UGCW
TELEPHONE LINE	C
OVERHEAD ELECTRIC	OE
UNDERGROUND ELECTRIC	UE
TOP OF BANK	TOB
SPOT ELEVATION	+7.50

LEGEND

WM	NEW WATER MAIN
SAN	NEW SANITARY SEWER
FM	NEW FORCEMAIN
6.0	NEW TOPOGRAPHIC CONTOUR
6.0	EXISTING TOPOGRAPHIC CONTOUR
ROW	RIGHT OF WAY
	MATCHLINE
	FLOATING TURBIDITY BARRIER PER FDOT INDEX 200
	PROPOSED ASPHALT RESTORATION
	PROPOSED CONCRETE RESTORATION
	PROPOSED LIMEROCK RESTORATION
	PROPOSED CONCRETE SIDEWALK RESTORATION
	ITEM TO BE REMOVED
	HORIZONTAL DIRECTIONAL DRILL
	UTILITY CONFLICT AREA
×(7.50)	NEW SPOT ELEVATION
	NEW FIRE HYDRANT
C3	COORDINATE POINT
	TEMPORARY LINE STOP
BFP	BACKFLOW PREVENTER W/ FLOW INDICATION

MECHANICAL LEGEND

PIPING SYMBOLS

DOUBLE LINE	SINGLE LINE	
		EXISTING PIPE
		NEW PIPE (ABOVE GROUND)
		NEW PIPE (BELOW GROUND)
		WELDED PIPE
		EXISTING PIPE TO BE REMOVED
		FLANGED JOINT
		MECHANICAL JOINT OR RESTRAINED PUSH-ON JOINT
		FLEXIBLE COUPLING ADAPTER
		HUB & SPIGOT JOINT
		FLANGED COUPLING ADAPTER W/ THRUST TIES
		FLEXIBLE COUPLING WITH THRUST TIES
		BLIND FLANGE
		90° ELBOW UP
		90° ELBOW DOWN
		TEE UP
		TEE DOWN
		FLANGED COUPLING ADAPTER
		PUMP EXPANSION COUPLING
		ELBOW UP

DOUBLE LINE	SINGLE LINE	
		ELBOW DOWN
		CONCENTRIC REDUCER
		ECCENTRIC REDUCER
		UNION
		CAP
		TEE
		TEE W/ RESTRAINED PLUG
		ELBOW, 90 DEGREE
		ELBOW, 45 DEGREE
		ELBOW, 22.5 DEGREE
		ELBOW, 11.25 DEGREE
		ABANDON IN PLACE
		SLEEVE
		WYE
		CROSS

VALVE SYMBOLS

DOUBLE LINE	SINGLE LINE	
OR		PRESSURE CONTROL
		AIR RELEASE AND/OR VACUUM RELIEF
		PRESSURE SAFETY RELEASE VALVE
		PUMP (WET PIT)
		PRESSURE GAUGE W/ISOLATION VALVE
		PRESSURE GAUGE W/ISOLATION VALVE & DIAPHRAGM SEAL
		SEAT PORT ECCENTRIC PLUG
		PLUG
		GATE
OR		BUTTERFLY
		BALL
		CHECK

SECTION DESIGNATION

DIRECTION OF SECTION

SECTION DESIGNATION

SHEET NUMBER SECTION APPEARS ON

SHEET NUMBER SECTION IS CUT ON

DETAIL DESIGNATION

DETAIL DESIGNATION

SHEET NUMBER DETAIL APPEARS ON

SHEET NUMBER DETAIL IS REFERENCED ON

● INDICATES DETAIL IS REFERENCED ON MORE THAN ONE PAGE

SECTION DESIGNATION

DIRECTION OF SECTION

INDICATES ONE OR MORE SECTIONS CUT AND SHOWN ON THE SAME DETAIL

NOTES

A. THIS IS A STANDARD LEGEND SHEET. SOME SYMBOLS MAY APPEAR ON THE LEGEND AND NOT ON THE DRAWINGS.

B. EXISTING PIPE, EQUIPMENT, AND FEATURES ARE SHOWN LIGHT-LINED AND/OR SCREENED. PROPOSED PIPE AND EQUIPMENT IS SHOWN HEAVY-LINED OR BOLD.

V3

THIS SPACE RESERVED

SYM	ZONE	DESCRIPTION	DATE	APPROVED
A		GENERAL REVISIONS	10/31/11	

REVISIONS

THIS DRAWING CREATED IN AUTOCAD 2010 FILE FORMAT AND WILL BE REVISED ONLY ON AN AUTOCAD SYSTEM. FILE: 14000189-V03.DWG

JONES EDMUNDS
730 NE WALDO ROAD, GAINESVILLE, FLORIDA 32641 / (352) 377-5821
3910 S WASHINGTON AVE, SUITE 210, TITUSVILLE, FLORIDA 32780 / (321) 269-2950

SIGNATURES	DATE
DRAWN J. ALLEN	10/31/11
CHECKED R. BEST	10/31/11
SUBMITTED M. CLARK	10/31/11
ST of LICENSURE: FL LICENSE NO: 48898	
APPROVED M. CLARK	10/31/11
K. MILLER	11/1/11

NATIONAL AERONAUTICS AND SPACE ADMINISTRATION
JOHN F. KENNEDY SPACE CENTER, NASA
KENNEDY SPACE CENTER, FLORIDA

REVITALIZE WATER & WASTEWATER SYSTEMS - KARS PARK I

ABBREVIATIONS AND LEGENDS

FILE NO.	SIZE	DWG. NO.	REV
	F	79K38879	A

PROJ. NO. 96968.3 | SHEET 3

NOTICE: When Government drawings, specifications, or other data are used for any purpose other than in connection with a definitely related Government procurement operation, the United States Government thereby incurs no responsibility nor obligation whatsoever; and the fact that the Government may have formulated, furnished, or in any way supplied the said drawings, specifications or other data is not to be regarded by implication or otherwise as in any manner licensing the holder or any other person or corporation, or conveying any rights or permission to manufacture, use, or sell any patented invention that may in any way be related thereto.

GRAPHIC SCALE
0 100 200 400
SCALE IN FEET
1"=200'

-N-

V4

THIS SPACE RESERVED

SYM	ZONE	DESCRIPTION	DATE	APPROVED
A		GENERAL REVISIONS	10/31/11	

REVISIONS

THIS DRAWING CREATED IN AUTOCAD 2010 FILE FORMAT AND WILL BE REVISED ONLY ON AN AUTOCAD SYSTEM. FILE: 14000189-V04.DWG

JONES EDMUNDS
730 NE WALDO ROAD, GAINESVILLE, FLORIDA 32641 / (352) 377-5821
3910 S WASHINGTON AVE, SUITE 210, TITUSVILLE, FLORIDA 32780 / (321) 269-2950

SIGNATURES	DATE
DRAWN J. ALLEN	10/31/11
CHECKED R. BEST	10/31/11
SUBMITTED M. CLARK	10/31/11
ST of LICENSURE: FL LICENSE NO: 48898	
APPROVED M. CLARK	10/31/11
K. MILLER	11/1/11

NATIONAL AERONAUTICS AND SPACE ADMINISTRATION
JOHN F. KENNEDY SPACE CENTER, NASA
KENNEDY SPACE CENTER, FLORIDA

REVITALIZE WATER & WASTEWATER SYSTEMS - KARS PARK I

KEY MAP

FILE NO.	SIZE	DWG. NO.	REV
	F	79K38879	A

PROJ. NO. 96968.3 | SHEET 4

KSC FORM 1-11 (3/76)(C/G 3/94)

NOTICE: When Government drawings, specifications, or other data are used for any purpose other than in connection with a definitely related Government procurement operation, the United States Government thereby incurs no responsibility nor obligation whatsoever; and the fact that the Government may have formulated, furnished, or in any way supplied the said drawings, specifications or other data is not to be regarded by implication or otherwise as in any manner licensing the holder or any other person or corporation, or conveying any rights or permission to manufacture, use, or sell any patented invention that may in any way be related thereto.

SWMU CONTAMINANTS

SWMU	CONTAMINANTS	LOCATION (MEDIA)	STATUS	NOTES	DWG NO
4	POLYCHLORINATED BIPHENYLS (PCBS), POLYNUCLEAR AROMATIC HYDROCARBONS (PAHS)	SOIL	LTM		
	VOLATILE ORGANIC COMPOUNDS (VOCS)	GROUNDWATER			
8	CHLORINATED VOLATILE ORGANIC COMPOUNDS [CVOCS (TCE, CDCE, VINYL CHLORIDE (VC))], PENTACHLOROPHENOL (PCP)	GROUNDWATER	CMS		
	ZINC, ARSENIC, BERYLLIUM, LEAD, BENZO(A)PYRENE (BAP), COPPER, CADMIUM, CHROMIUM, PAHS, PCBS, PCP	SOIL, SEDIMENT			
9	CVOCS (TCE, CDCE, VC), METALS (ALUMINUM, ARSENIC, BARIUM, LEAD, MERCURY, THALLIUM)	GROUNDWATER	CMI		
	BENZO(A)PYRENE (BAP), ARSENIC, NICKEL, ZINC	SOIL, SEDIMENT			
10	VOCS AND PCBS (GROUNDWATER); NONE (SOIL)	GROUNDWATER: WATER TABLE TO 30 FT BELOW LAND SURFACE	CMI		
13	PAHS, METALS	SOIL, SEDIMENT	CMI		
	VOCS	GROUNDWATER			
14	PCBS, PAHS, ARSENIC	SOIL, SEDIMENT	LTM		
	VOCS, IRON	GROUNDWATER			
21	PCBS	SOILS: PCBS IN SURFACE SOILS SURROUNDING SANDBLAST FACILITIES	LUCIP		
24C	VOCS AND PETROLEUM	GROUNDWATER: SEE SWMU 035 FOR PETROLEUM, LOW LEVEL VOCS CAN ALSO BE FOUND IN GENERAL AREA BELOW 20 FT BLS	LTM	PART OF SWMU 056	
30	VOCS, SEMIVOLATILE ORGANIC COMPOUNDS (SVOCS)	GROUNDWATER	CMI		
35	PETROLEUM	GROUNDWATER: SMALL AREA OF PETROLEUM CONTAMINANTS IN SHALLOW GROUNDWATER NORTH OF ABOVE GROUND STORAGE TANKS	SA		
36	VOCS	PART OF GROUNDWATER PLUME FROM SWMU 010 ENCROACHES ON THE SOUTHEAST CORNER OF THIS SITE	SA		
39	VOCS	GROUNDWATER	CMI		
40	VOCS	GROUNDWATER: WATER TABLE TO 50 FT BELOW LAND SURFACE	LTM		
41	VOCS[(TDCE, CDCE, VC, DFP (DECAFLUOROPENTANE)]	GROUNDWATER	RFI/IM		
43	PCBS	SOIL	CMI		
44	PAHS, PCBS, THALLIUM	SOIL	LUCIP		
45	NICKEL	SWALE SOIL	CMI		
	VOCS	GROUNDWATER			
55	PCBS, METALS	SOIL	CMI, LTM		
	VOCS	GROUNDWATER			
56	VOCS, AMMONIA	GROUNDWATER	CMI		
	BAP, PCBS	SOIL			
67	PCBS, PAHS	SOIL	CMI		
	VOCS, ALUMINUM	GROUNDWATER			
70	VOCS [TRICHLOROFLUOROMETHANE (TCFM) AND VC] AND ALUMINUM	GROUNDWATER	LUCIP		
72	METALS, PAHS, AND TRPH	SOIL, SWALE SOIL	CMI		
	ALUMINUM, VOCS	GROUNDWATER			
76	PCBS, PAHS	SOIL	LTM		
	VOCS, IRON	GROUNDWATER			
77	CVOCS	GROUNDWATER	RFI/IM		
	COPPER, CHROMIUM	SOIL			
79	VINYL CHLORIDE	GROUNDWATER	CS		
80	VOCS	GROUNDWATER: WATER TABLE TO 50 FT BELOW LAND SURFACE	LTM		
81	COPPER, ARSENIC, BAP, DIBENZO(A,H)ANTHRACENE, TOTAL PETROLEUM HYDROCARBONS (TPH)	SOIL/SWALE SOIL	LTM		
	ANTIMONY	GROUNDWATER			
82	VOCS (CDCE, VC)	GROUNDWATER	CMS		
84	1,1–BIPHENYL, ARSENIC, LEAD	GROUNDWATER	CMI		C1, C2, C7-C9, C15-C18
85	VC	GROUNDWATER	LTM		
88	CVOCS (TCE, VC)	GROUNDWATER	CMI		
89	TCE, CDCE, VC	GROUNDWATER	RFI/IM		

SWMU CONTAMINANTS

90	PCBS, TRPH, BARIUM, CHROMIUM, TCE, FREON 113	SOIL	CMS/IM		
	TETRACHLOROETHENE (PCE), TCE, CDCE, 1,1–DCE, 1,1 DCA, VC, FREON 113	GROUNDWATER			
91	VC	GROUNDWATER	RFI		
92	PCBS, PAHS	SOIL	CMI		
94	AMMONIA	GROUNDWATER	LTM		
95	VOCS (TCE, 1,1–DCE, CDCE, TDCE, VC)	GROUNDWATER	CMS/IM		
96	BARIUM, COPPER, PCBS, TOTAL PETROLEUM HYDROCARBONS (TPH)	SOIL	CMI		
98	AMMONIA	GROUNDWATER	LTM		
99	BAP, PAHS	SOIL	LTM		
	PETROLEUM HYDROCARBONS	GROUNDWATER			
100	VOCS (TCE, CDCE, TDCE, VC)	GROUNDWATER	RFI		
101	VOCS WITH VINYL CHLORIDE ONLY CONTAMINANT OF CONCERN EXCEEDING GW CLEANUP CRITERIA	GROUNDWATER	LTM		
102	VOCS (TCE, CDCE, VC)	GROUNDWATER	RFI		
104	PCBS	SOIL, CONCRETE	RFI/IM		
106	(AROCLOR–1254, BENZO(A)PYRENE TOTAL EQUIVALENTS [BAP TEQ], ARSENIC, BARIUM, CHROMIUM, COPPER, LEAD, MERCURY	SOIL	RFI/IM		
	VINYL CHLORIDE	GROUNDWATER			

BAP= BENZO(A)PYRENE

BLS= BELOW LAND SURFACE

CDCE= CIS–DICHLOROETHENE

CS= CONFIRMATION SAMPLING

CMI= CORRECTIVE MEASURES IMPLEMENTATION

CMS= CORRECTIVE MEASURES STUDY

CVOCS= CHLORINATED VOLATILE ORGANIC COMPOUNDS

DCA= DICHLOROETHANE

DCE= DICHLOROETHANE

DFP= DECAFLUOROPENTANE

IM= INTERIM MEASURE

LTM= LONG TERM MONITORING

LUCIP= LAND USE CONTROL IMPLEMENTATION PLAN

PAHS= POLYNUCLEAR AROMATIC HYDROCARBONS

PCBS= POLYCHLORNATED BIPHENYLS

PCP= PENTACHLOROPHENOL

RFI= RESOURCE CONSERVATION RECOVERY ACT (RCRA) FACILITY INVESTIGATION

TCE= TRICHLOROETHENE

TCFM= TRICHLOROFLUOROMETHANE

TDCE= TRANS–DICHLOROETHENE

TRPH= TOTAL RECOVERABLE PETROLEUM HYDROCARBONS

TPH= TOTAL PETROLEUM HYDROCARBONS

VC= VINYL CHLORIDE

VOCS= VOLATILE ORGANIC COMPOUNDS

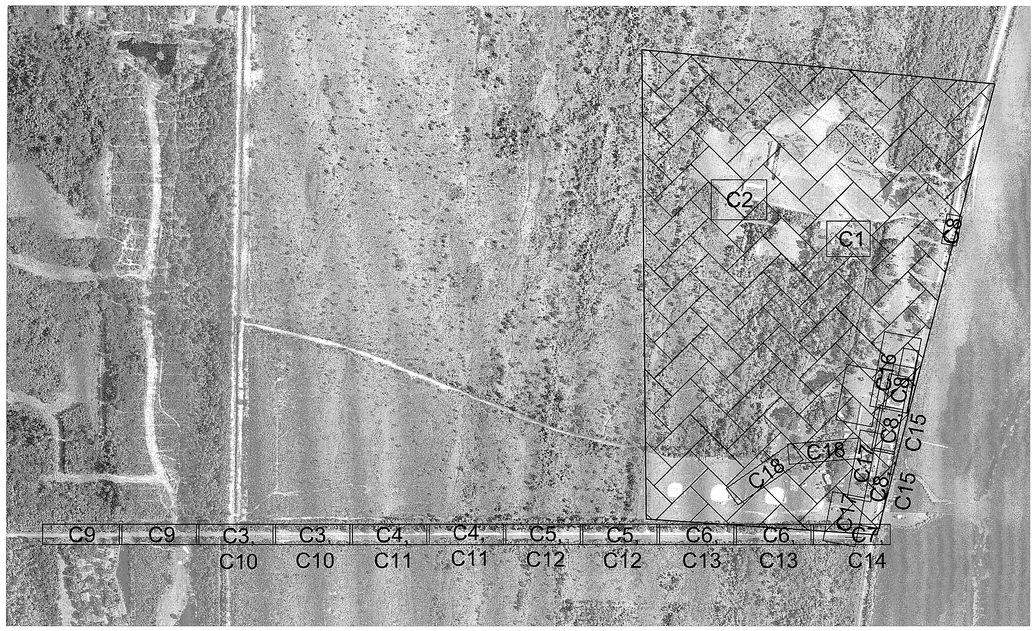

KARS PARK AREA PLAN

1"=500'

GRAPHIC SCALE

0 250 500 1000

SCALE IN FEET
1"=500'

-N-

ENVIRONMENTAL NOTES

A. THE CONTRACTOR SHALL SUBMIT A SITE SPECIFIC HEALTH AND SAFETY PLAN TO THE CO PRIOR TO START OF WORK PER SPECIFICATION SECTION 01 35 26. THE CONTRACTOR SHALL ABIDE TO THE SPECIAL CONDITIONS OF THE CONTRACT DOCUMENTS, AND ALL APPLICABLE STATE AND FEDERAL REQUIREMENTS.

B. HEAVY METALS AND/OR PCB'S IN PAINT AND MATERIALS ARE ASSUMED ON THE MATERIALS TO BE DEMOLISHED. CONCENTRATIONS ARE LOW ENOUGH IN RELATION TO OVERALL WEIGHT OF THE STRUCTURE THAT THE GOVERNMENT WILL ALLOW DISPOSAL AT THE GOVERNMENT OWNED KSC CLASS III LANDFILL SUBJECT TO THE REQUIREMENTS OF THE CONTRACT DOCUMENTS. UNPAINTED METALS AND CONCRETE SHALL BE RECYCLED IN ACCORDANCE WITH THE SPECIAL CONDITIONS OF THE CONTRACT DOCUMENTS.

LEGEND

SWMU SITE

GENERAL NOTES:

1. THE SYSTEMS BEING MODIFIED MAY BE LOCATED WITHIN VARIOUS SWMU SITES. THESE SITES CONTAIN GROUNDWATER CONTAMINATION, SOIL CONTAMINATION, OR BOTH. SOIL EXCAVATED FROM THE LAND SURFACE TO ANY DEPTH SHALL BE RETURNED TO THE AREA OF EXCAVATION FROM WHICH IT WAS REMOVED. SOIL EXCAVATED FROM THE SITE THAT CANNOT BE RETURNED TO THE AREA FROM WHICH IT WAS REMOVED SHALL BE COLLECTED BY THE CONTRACTOR AND PLACED IN AN APPROPRIATE CONTAINER IN ACCORDANCE WITH THE REGULATIONS. THE CONTRACTOR SHALL COORDINATE WITH THE CO AND NASA ENVIRONMENTAL TO HAVE THE EXCAVATED SOIL SAMPLED TO DETERMINE IF IT IS A HAZARDOUS WASTE. THE SOIL SHALL BE DISPOSED OF IN ACCORDANCE WITH THE PWQ/TRP PROCESS. THE CONTRACTOR SHALL USE BEST MANAGEMENT PRACTICES TO PREVENT EROSION AND REMOVAL OF SOIL FROM SITE.
2. DEWATERING EFFLUENT SHALL BE DISCHARGED TO GRADE UPLAND OF THE EXCAVATED AREA AND ALLOWED TO PERCOLATE BACK INTO THE PERVIOUS GROUND SURFACE. DEWATERING SHALL NOT EXCEED 50 GPM WITHIN A SWMU OR PRL, UNLESS AUTHORIZED BY THE CO AND NASA ENVIRONMENTAL. BEST MANAGEMENT PRACTICES SHALL BE USED TO PREVENT DEWATERING EFFLUENT FROM ENTERING SURFACE WATERS. THE CONTRACTOR SHALL SUBMIT A DEWATERING PLAN TO THE CO AND NASA ENVIRONMENTAL 14 DAYS PRIOR TO COMMENCEMENT OF DEWATERING WORK WITHIN A SWMU OR PRL BOUNDARY FOR DEWATERING PLAN APPROVAL.
3. THE SIZE AND LOCATIONS OF SWMU/PRL AREAS ARE BASED ON THE BEST AVAILABLE INFORMATION AND LOCATIONS AND SIZE OF AREAS ARE APPROXIMATE.
4. THE CONTRACTOR IS TO CONTACT THE CO SHOULD CONTAMINANTS OR SUSPECTED CONTAMINANTS BE IDENTIFIED OUTSIDE THE LIMITS OF THE IDENTIFIED SWMU/PRL AREAS AND WITHIN THE LIMITS OF CONSTRUCTION.
5. SWMU/PRL CONTAMINANT DATA WAS PROVIDED BY NASA ENVIRONMENTAL.

THIS SPACE RESERVED

SYM	ZONE	DESCRIPTION	DATE	APPROVED
A		GENERAL REVISIONS	12/05/11	

REVISIONS

THIS DRAWING CREATED IN AUTOCAD 2010 FILE FORMAT AND WILL BE REVISED ONLY ON AN AUTOCAD SYSTEM. FILE: 14000189–EN–1.DWG

JONES EDMUNDS
730 NE WALDO ROAD, GAINESVILLE, FLORIDA 32641 / (352) 377-5821
3910 S WASHINGTON AVE, SUITE 210, TITUSVILLE, FLORIDA 32780 / (321) 269-2950

SIGNATURES	DATE
DRAWN J. ALLEN	12/05/11
CHECKED D. TOTH	12/05/11
SUBMITTED K. RIVERA	12/05/11
ST of LICENSURE: FL LICENSE NO: 65681	
APPROVED M. CLARK	12/05/11
K. MILLER	12/5/11

NATIONAL AERONAUTICS AND SPACE ADMINISTRATION
JOHN F. KENNEDY SPACE CENTER, NASA
KENNEDY SPACE CENTER, FLORIDA

REVITALIZE WATER & WASTEWATER SYSTEMS - KARS PARK I

SWMU CONTAMINANTS AND ENVIRONMENTAL NOTES

FILE NO.	SIZE	DWG. NO.	REV
	F	79K38879	A

PROJ. NO. 96968.3 SHEET 5

EN1

NOTICE: When Government drawings, specifications, or other data are used for any purpose other than in connection with a definitely related Government procurement operation, the United States Government thereby incurs no responsibility nor obligation whatsoever; and the fact that the Government may have formulated, furnished, or in any way supplied the said drawings, specifications or other data is not to be regarded by implication or otherwise as in any manner licensing the holder or any other person or corporation, or conveying any rights or permission to manufacture, use, or sell any patented invention that may in any way be related thereto.

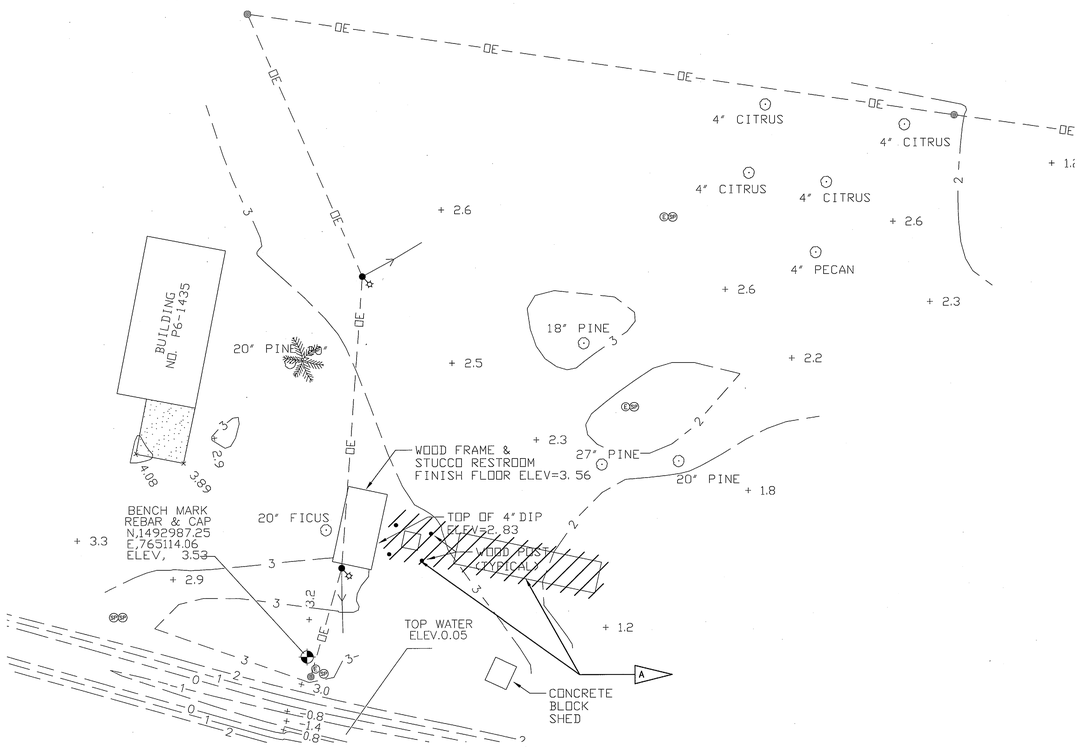

EAST GUN CLUB DEMO PLAN

1"=20'

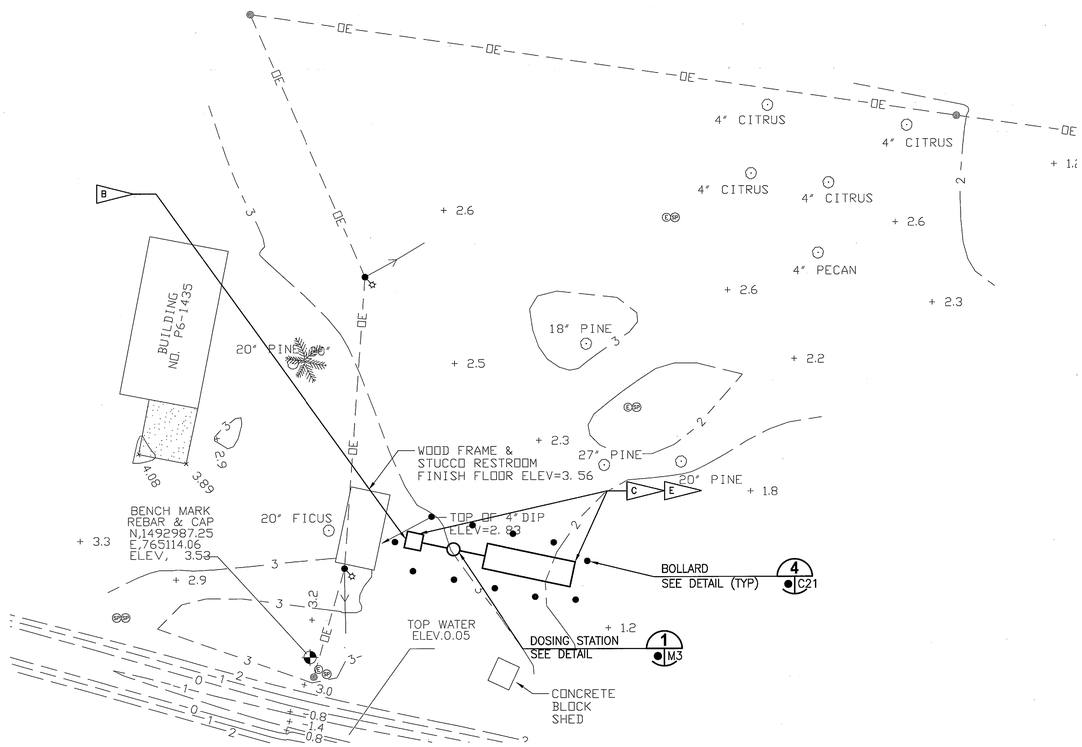

EAST GUN CLUB SITE PLAN

1"=20'

NOTES

A. DECOMMISSION AND COMPLETELY DEMOLISH AND REMOVE EXISTING 2,500 GAL SEPTIC TANK, 450 SF DRAIN FIELD, AND APPURTENANCES.

B. CONTRACTOR TO FIELD VERIFY THE INVERT OF THE EXISTING GRAVITY SERVICE LINE. CONTRACTOR TO FURNISH AND INSTALL APPROPRIATE FITTINGS AND APPURTENANCES TO RECONNECT THE EXISTING GRAVITY SERVICE LINE TO THE PROPOSED SEPTIC TANK.

C. INSTALL NEW 900 GAL SEPTIC TANK, 500 SF MOUNDED DRAIN FIELD WITHIN THE SAME EXCAVATION PIT USED TO REMOVE THE EXISTING SEPTIC SYSTEM.

D. PRIOR TO COMMENCING ANY WORK, REFER TO GENERAL NOTE 43 ON V3.

E. PERMIT, CONSTRUCT, AND INSTALL SEPTIC SYSTEM IN ACCORDANCE WITH FAC CHAPTER 64E-6.
TO SERVICE:
- 15 GUESTS/DAY
- 7 DAYS/WEEK
- 8 SINKS
- 8 TOILETS
- 4 URINALS
- 1 SINK IN P6-1435

SEPTIC SYSTEM SHALL BE PERMITTED AS AN ONSITE SEWAGE TREATMENT AND DISPOSAL SYSTEM THROUGH BREVARD COUNTY HEALTH DEPARTMENT.

GRAPHIC SCALE
0 10 20 40
SCALE IN FEET
1"=20'

C1

THIS SPACE RESERVED

SYM	ZONE	DESCRIPTION	DATE	APPROVED
A		GENERAL REVISIONS	10/31/11	KM

REVISIONS

THIS DRAWING CREATED IN AUTOCAD 2010 FILE FORMAT AND WILL BE REVISED ONLY ON AN AUTOCAD SYSTEM. FILE: 14000189-C01.DWG

JONES EDMUNDS
730 NE WALDO ROAD, GAINESVILLE, FLORIDA 32641 / (352) 377-5821
3910 S WASHINGTON AVE, SUITE 210, TITUSVILLE, FLORIDA 32780 / (321) 269-2950

SIGNATURES	DATE
DRAWN J. ALLEN	10/31/11
CHECKED M. CLARK	10/31/11
SUBMITTED R. BEST	10/31/11
ST of LICENSURE: FL LICENSE NO: 69875	
M. CLARK	10/31/11
K. MILLER	11/1/11

NATIONAL AERONAUTICS AND SPACE ADMINISTRATION
JOHN F. KENNEDY SPACE CENTER, NASA
KENNEDY SPACE CENTER, FLORIDA

REVITALIZE WATER & WASTEWATER SYSTEMS - KARS PARK I

EAST GUN CLUB SEPTIC TANK REPLACEMENT PLAN

FILE NO.	SIZE	DWG. NO.	REV
	F	79K38879	A

PROJ. NO. 96968.3 SHEET 6

NOTICE: When Government drawings, specifications, or other data are used for any purpose other than in connection with a definitely related Government procurement operation, the United States Government thereby incurs no responsibility nor obligation whatsoever; and the fact that the Government may have formulated, furnished, or in any way supplied the said drawings, specifications or other data is not to be regarded by implication or otherwise as in any manner licensing the holder or any other person or corporation, or conveying any rights or permission to manufacture, use, or sell any patented invention that may in any way be related thereto.

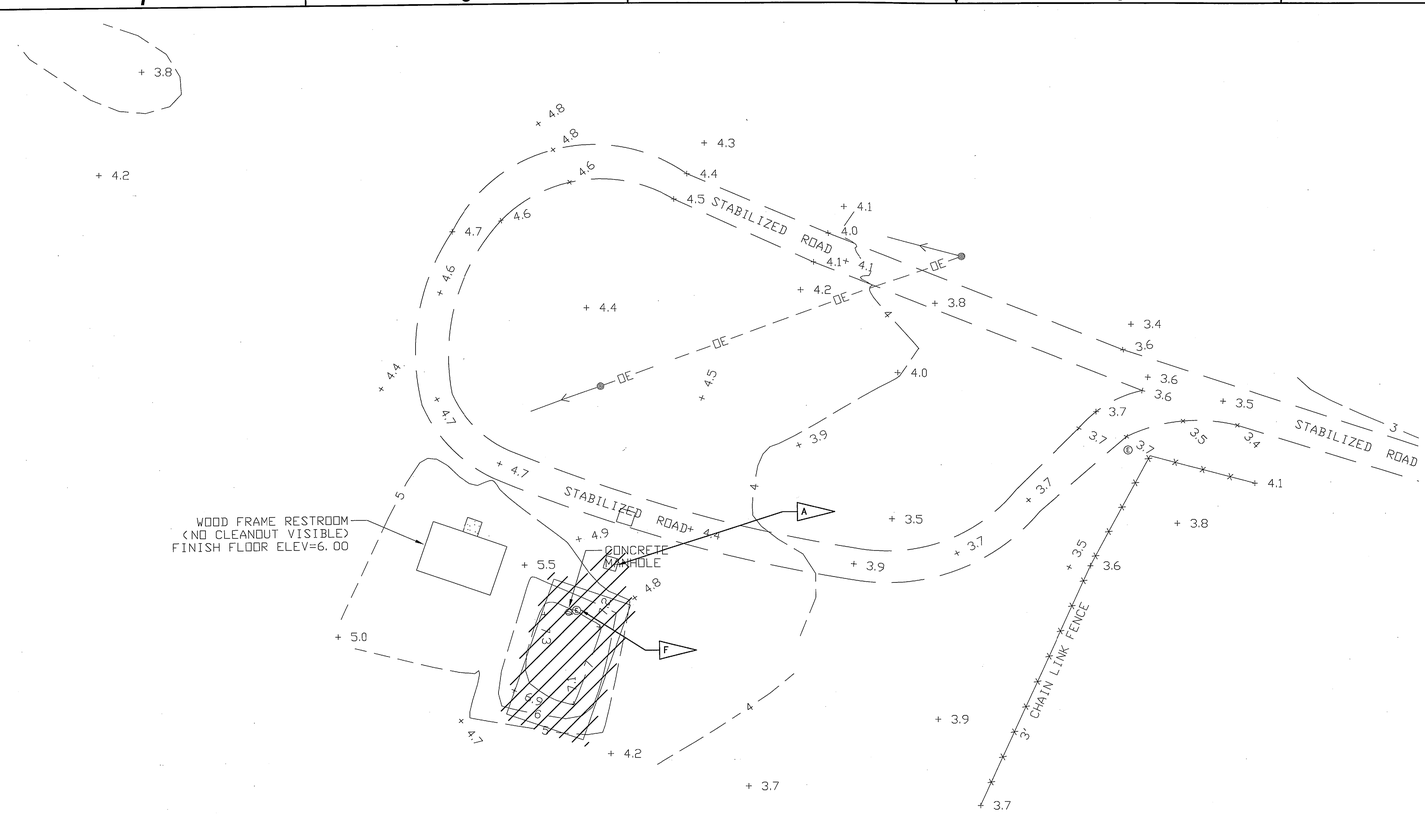

WEST GUN CLUB DEMO PLAN

1"=20'

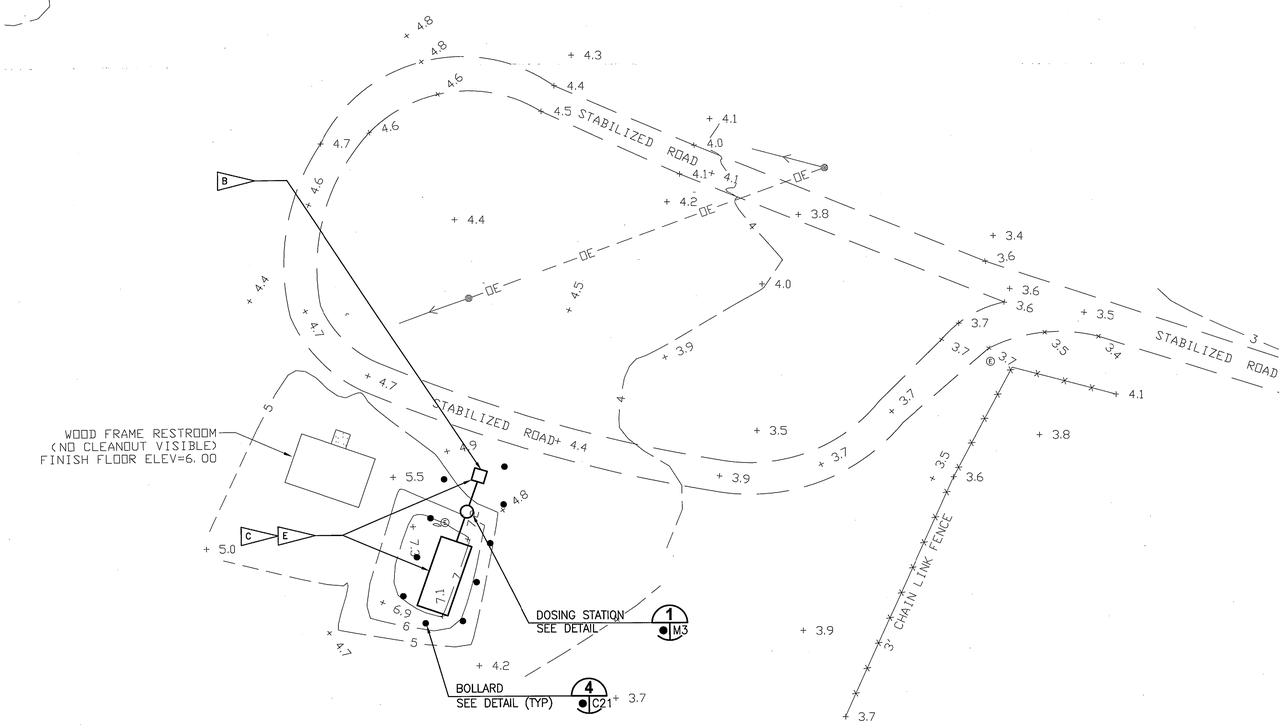

WEST GUN CLUB SITE PLAN

1"=20'

NOTES

A. DECOMMISSION AND COMPLETELY DEMOLISH AND REMOVE EXISTING 900 GAL SEPTIC TANK, 300 SF DRAIN FIELD, DOSING TANK, PUMP, AND APPURTENANCES.

B. CONTRACTOR TO FIELD VERIFY THE INVERT OF THE EXISTING GRAVITY SERVICE LINE. CONTRACTOR TO FURNISH AND INSTALL APPROPRIATE FITTINGS AND APPURTENANCES TO RECONNECT THE EXISTING GRAVITY SERVICE LINE TO THE PROPOSED SEPTIC TANK.

C. INSTALL NEW 900 GAL SEPTIC TANK, 334 SF MOUNDED DRAIN FIELD WITHIN THE SAME EXCAVATION PIT USED TO REMOVE THE EXISTING SEPTIC SYSTEM.

D. PRIOR TO COMMENCING ANY WORK, REFER TO GENERAL NOTE 43 ON V3.

E. PERMIT, CONSTRUCT, AND INSTALL SEPTIC SYSTEM IN ACCORDANCE WITH FAC CHAPTER 64E-6. TO SERVICE:
- 15 GUESTS/DAY
- 7 DAYS/WEEK
- 8 SINKS
- 8 TOILETS
- 4 URINALS
- 1 SINK IN CLUBHOUSE

SEPTIC SYSTEM SHALL BE PERMITTED AS AN ONSITE SEWAGE TREATMENT AND DISPOSAL SYSTEM THROUGH BREVARD COUNTY HEALTH DEPARTMENT.

F. REMOVE EXISTING ELECTRIC CIRCUIT FOR PUMP BACK TO PANEL.

GRAPHIC SCALE
0 10 20 40
SCALE IN FEET
1"=20'

C2

THIS SPACE RESERVED

SYM	ZONE	DESCRIPTION	DATE	APPROVED
A		GENERAL REVISIONS	10/31/11	

REVISIONS

THIS DRAWING CREATED IN AUTOCAD 2010 FILE FORMAT AND WILL BE REVISED ONLY ON AN AUTOCAD SYSTEM. FILE: 14000189-C02.DWG

JONES EDMUNDS
730 NE WALDO ROAD, GAINESVILLE, FLORIDA 32641 / (352) 377-5821
3910 S WASHINGTON AVE, SUITE 210, TITUSVILLE, FLORIDA 32780 / (321) 269-2950

SIGNATURES	DATE
DRAWN J. ALLEN	10/31/11
CHECKED M. CLARK	10/31/11
SUBMITTED R. BEST	10/31/11
ST of LICENSURE: FL LICENSE NO: 69875	
M. CLARK	10/31/11
K. MILLER	11/1/11

NATIONAL AERONAUTICS AND SPACE ADMINISTRATION
JOHN F. KENNEDY SPACE CENTER, NASA
KENNEDY SPACE CENTER, FLORIDA

REVITALIZE WATER & WASTEWATER SYSTEMS - KARS PARK I

WEST GUN CLUB SEPTIC TANK REPLACEMENT PLAN

FILE NO.	SIZE	DWG. NO.	REV
	F	79K38879	A

PROJ. NO. 96968.3 | SHEET 7

NOTICE: When Government drawings, specifications, or other data are used for any purpose other than in connection with a definitely related Government procurement operation, the United States Government thereby incurs no responsibility nor obligation whatsoever; and the fact that the Government may have formulated, furnished, or in any way supplied the said drawings, specifications or other data is not to be regarded by implication or otherwise as in any manner licensing the holder or any other person or corporation, or conveying any rights or permission to manufacture, use, or sell any patented invention that may in any way be related thereto.

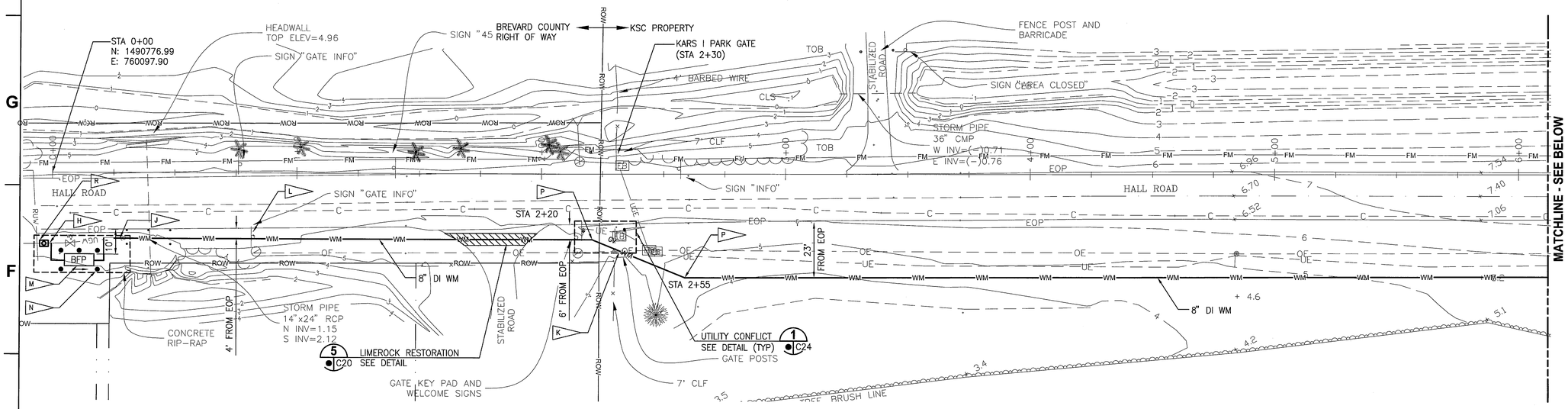

EAST HALL ROAD PLAN

1"=20'

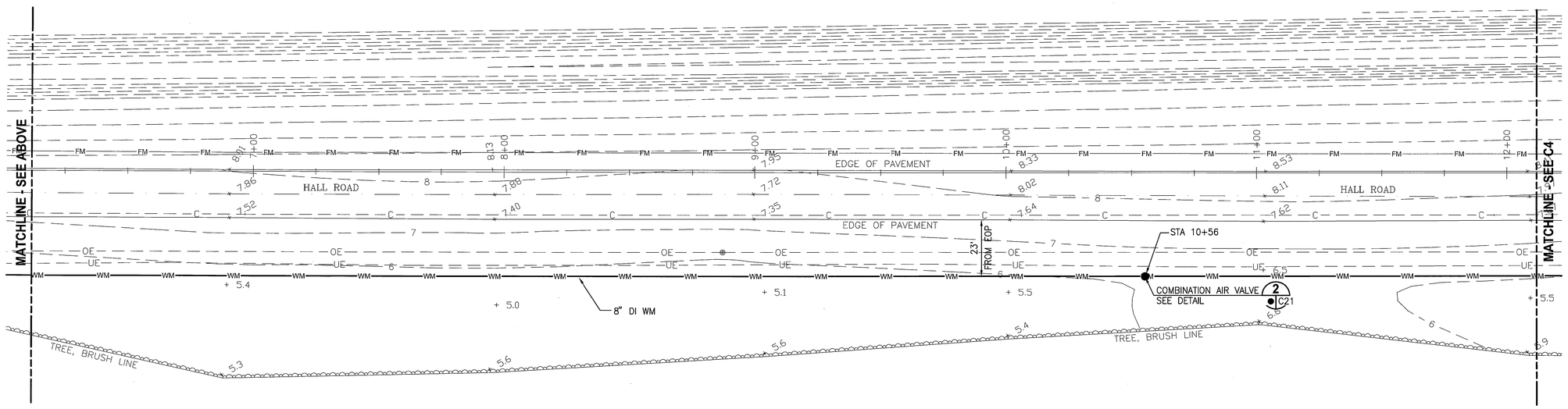

EAST HALL ROAD PLAN

1"=20'

STANDARD CONSTRUCTION NOTES FOR WORK CONDUCTED IN BREVARD COUNTY RIGHT OF WAYS

A. ALL DISTURBED AREAS WITHIN THE COUNTY RIGHT OF WAY SHALL BE SODDED. SEED AND MULCH IS NOT ACCEPTABLE.

B. ALL DIRECTIONAL BORES MUST EXTEND A MINIMUM 8 (EIGHT) FEET PAST THE EDGE OF PAVEMENT OF ANY ROADWAY OR COMMERCIAL DRIVEWAY. FOR PRIVATE RESIDENTIAL DRIVEWAYS THE BORE MUST EXTEND 3 (THREE) FEET PAST THE EDGE OF THE DRIVEWAY. FOR PRIVATE AND COMMERCIAL SIDEWALKS THE BORE MUST EXTEND 3 (THREE) FEET ON EITHER SIDE.

C. ALL DIRECTIONAL BORES SHALL BE IN ACCORDANCE WITH FDOT STANDARD SPECIFICATIONS FOR ROAD AND BRIDGE CONSTRUCTION SECTION 555, DIRECTIONAL BORES AND THE FDOT UTILITIES ACCOMMODATION MANUAL

D. ANY DAMAGE TO THE EXISTING INFRASTRUCTURE, INCLUDING SIDEWALKS, BY THE CONTRACTOR MUST BE REPLACED PRIOR TO FINAL INSPECTION. SIDEWALK PATCHING IS NOT ACCEPTABLE.

E. A VISUAL OR MECHANICAL INTERIOR INSPECTION OF THE EXISTING CULVERT(S) WILL BE REQUIRED PRIOR TO FINAL INSPECTION.

F. A MINIMUM OF 18 (EIGHTEEN) INCHES OF SEPARATION WILL BE MAINTAINED WITH EXISTING UTILITIES.

G. EXISTING DRAINAGE SWALES AND/OR CULVERTS WILL BE MAINTAINED DURING PROPOSED TRENCH/BORE AND WILL BE RESTORED TO ORIGINAL CONDITION.

NOTES

H — INSTALL 2" TEMPORARY JUMPER AND METER ASSEMBLY, INCLUDING BACKFLOW PREVENTER, AT TEMPORARY LINE STOP. (POINT OF CONNECTION) SEE DETAIL 3/C27

J — REMOVE EXISTING BLOW OFF ASSEMBLY AND 8" GATE VALVE. (APPROX STA 0+27.82) CONNECT TO EXISTING WATER MAIN WITH 8" DI 90° ELBOW.

K — CONTRACTOR TO REMOVE AND REPLACE APPROX 50 LF OF FENCING.

L — REMOVE AND RESET SIGN AS REQUIRED FOR INSTALLATION OF WATER MAIN. SIGN SHALL BE PLACED IN ORIGINAL LOCATION AND MATCH EXISTING ORIENTATION AND HEIGHT. SIGN POST SHALL BE SECURED IN GROUND WITH CONCRETE, AND MATCH EXISTING EMBEDMENT. IF POST LOCATION CONFLICTS WITH WATER MAIN, CONTRACTOR TO COORDINATE NEW LOCATION WITH CO.

M — NEW 6" WATER METER AND 8" BACKFLOW PREVENTER. ABOVE GROUND INSTALLATION (CENTER AT STA 0+10.80) SEE DETAIL 1/C27 MAINTAIN 48" CLEARANCE FROM EDGE OF PAVEMENT AND COMPLETE BREVARD COUNTY ROADWAY AND EASEMENT IMPROVEMENT APPLICATION UTILITY INSTALLATION/RIGHT-OF-WAY-USE TO CONSTRUCTION.

N — INSTALL 5 BOLLARDS AROUND BACKFLOW PREVENTER 1.5' OFF EDGE OF SLAB. STRADDLE EXISTING RCP. SEE TYPICAL DETAIL 4/C21

P — 8" 22.5° RMJ DI BEND.

R — INSTALL TEMPORARY LINE STOP. COORDINATE WITH CITY OF COCOA REQUIREMENTS.

THIS SPACE RESERVED

SYM	ZONE	DESCRIPTION	DATE	APPROVED
A		GENERAL REVISIONS	12/05/11	

REVISIONS

THIS DRAWING CREATED IN AUTOCAD 2010 FILE FORMAT AND WILL BE REVISED ONLY ON AN AUTOCAD SYSTEM. FILE: 14000189-C03.DWG

JONES EDMUNDS
730 NE WALDO ROAD, GAINESVILLE, FLORIDA 32641 / (352) 377-5821
3910 S WASHINGTON AVE, SUITE 210, TITUSVILLE, FLORIDA 32780 / (321) 269-2950

SIGNATURES	DATE
DRAWN J. ALLEN	12/05/11
CHECKED M. CLARK	12/05/11
SUBMITTED R. BEST	12/05/11
ST of LICENSURE: FL LICENSE NO: 69875	
APPROVED M. CLARK	12/5/11
K. MILLER	12/5/11

NATIONAL AERONAUTICS AND SPACE ADMINISTRATION
JOHN F. KENNEDY SPACE CENTER, NASA
KENNEDY SPACE CENTER, FLORIDA

REVITALIZE WATER & WASTEWATER SYSTEMS - KARS PARK I

WATER MAIN ROUTING PLAN

FILE NO.	SIZE	DWG. NO.	REV
	F	79K38879	A
PROJ. NO. 96968.3		SHEET 8	

GRAPHIC SCALE
0 10 20 40
SCALE IN FEET
1"=20'

N

C3

NOTICE: When Government drawings, specifications, or other data are used for any purpose other than in connection with a definitely related Government procurement operation, the United States Government thereby incurs no responsibility nor obligation whatsoever; and the fact that the Government may have formulated, furnished, or in any way supplied the said drawings, specifications or other data is not to be regarded by implication or otherwise as in any manner licensing the holder or any other person or corporation, or conveying any rights or permission to manufacture, use, or sell any patented invention that may in any way be related thereto.

NOTES

A — 8" 45° RMJ DI BEND.

B — 8" RMJ GV.

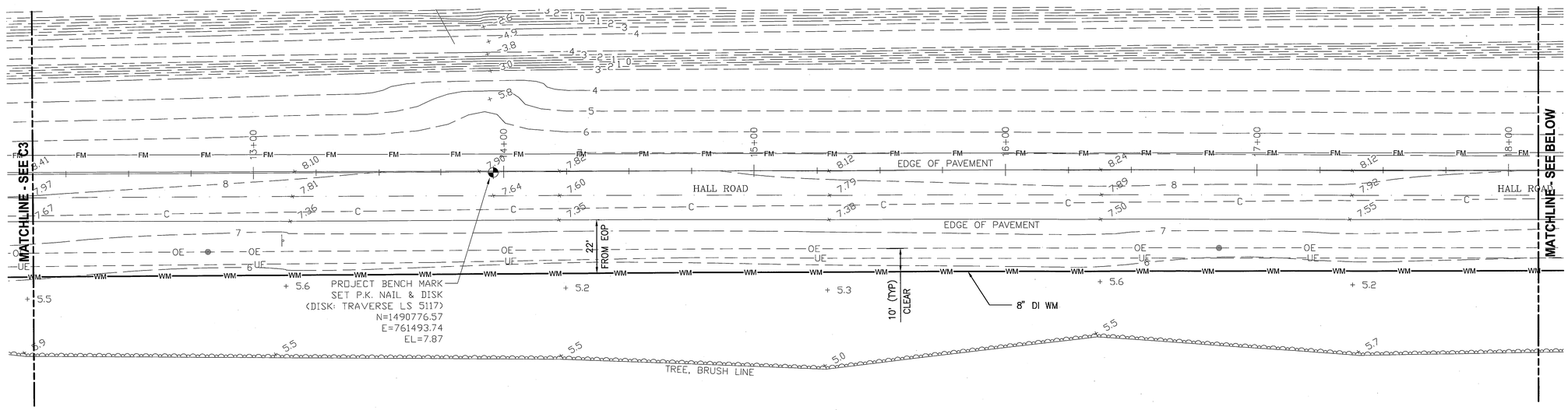

EAST HALL ROAD PLAN

1"=20'

EAST HALL ROAD PLAN

1"=20'

GRAPHIC SCALE

0 10 20 40

SCALE IN FEET
1"=20'

N

C4

THIS SPACE RESERVED

SYM	ZONE	DESCRIPTION	DATE	APPROVED
A		GENERAL REVISIONS	10/31/11	

REVISIONS

THIS DRAWING CREATED IN AUTOCAD 2010 FILE FORMAT AND WILL BE REVISED ONLY ON AN AUTOCAD SYSTEM. FILE: 14000189-C04.DWG

JONES EDMUNDS
730 NE WALDO ROAD, GAINESVILLE, FLORIDA 32641 / (352) 377-5821
3910 S WASHINGTON AVE, SUITE 210, TITUSVILLE, FLORIDA 32780 / (321) 269-2950

SIGNATURES	DATE
DRAWN J. ALLEN	10/31/11
CHECKED M. CLARK	10/31/11
SUBMITTED R. BEST	10/31/11
ST of LICENSURE: FL LICENSE NO: 69875	
M. CLARK	10/31/11
K. MILLER	11/1/11

NATIONAL AERONAUTICS AND SPACE ADMINISTRATION
JOHN F. KENNEDY SPACE CENTER, NASA
KENNEDY SPACE CENTER, FLORIDA

REVITALIZE WATER & WASTEWATER SYSTEMS - KARS PARK I

WATER MAIN ROUTING PLAN

FILE NO.	SIZE	DWG. NO.	REV
	F	79K38879	A

PROJ. NO. 96968.3 SHEET 9

NOTICE: When Government drawings, specifications, or other data are used for any purpose other than in connection with a definitely related Government procurement operation, the United States Government thereby incurs no responsibility nor obligation whatsoever; and the fact that the Government may have formulated, furnished, or in any way supplied the said drawings, specifications or other data is not to be regarded by implication or otherwise as in any manner licensing the holder or any other person or corporation, or conveying any rights or permission to manufacture, use, or sell any patented invention that may in any way be related thereto.

NOTES

- A — 8"X6" RMJ DI TEE.
- B — 8" RMJ GV.
- C — 8" RMJ DI TEE.
- D — 6" RMJ GV.

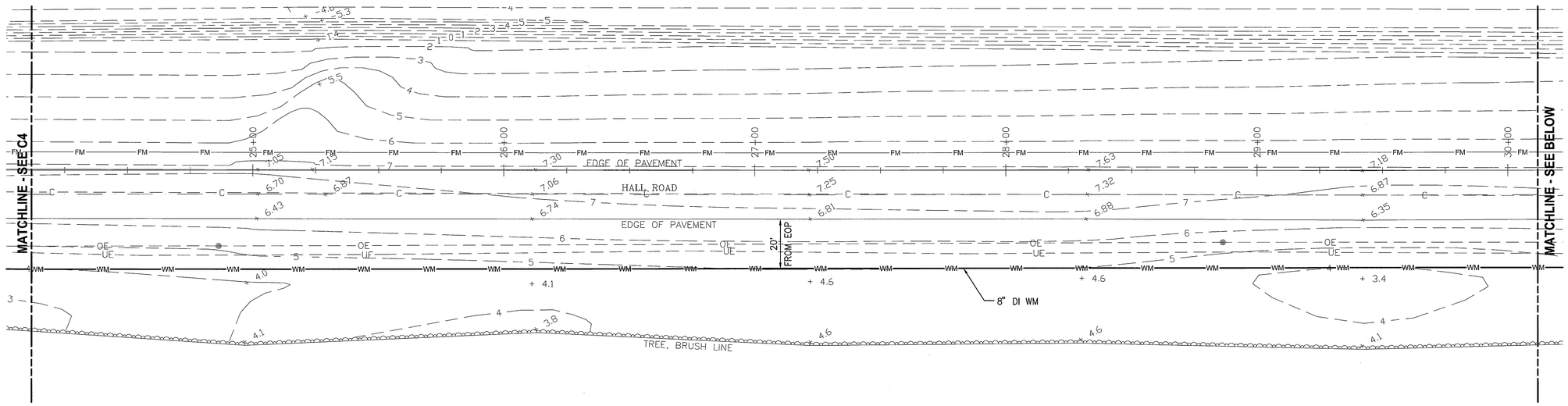

EAST HALL ROAD PLAN

1"=20'

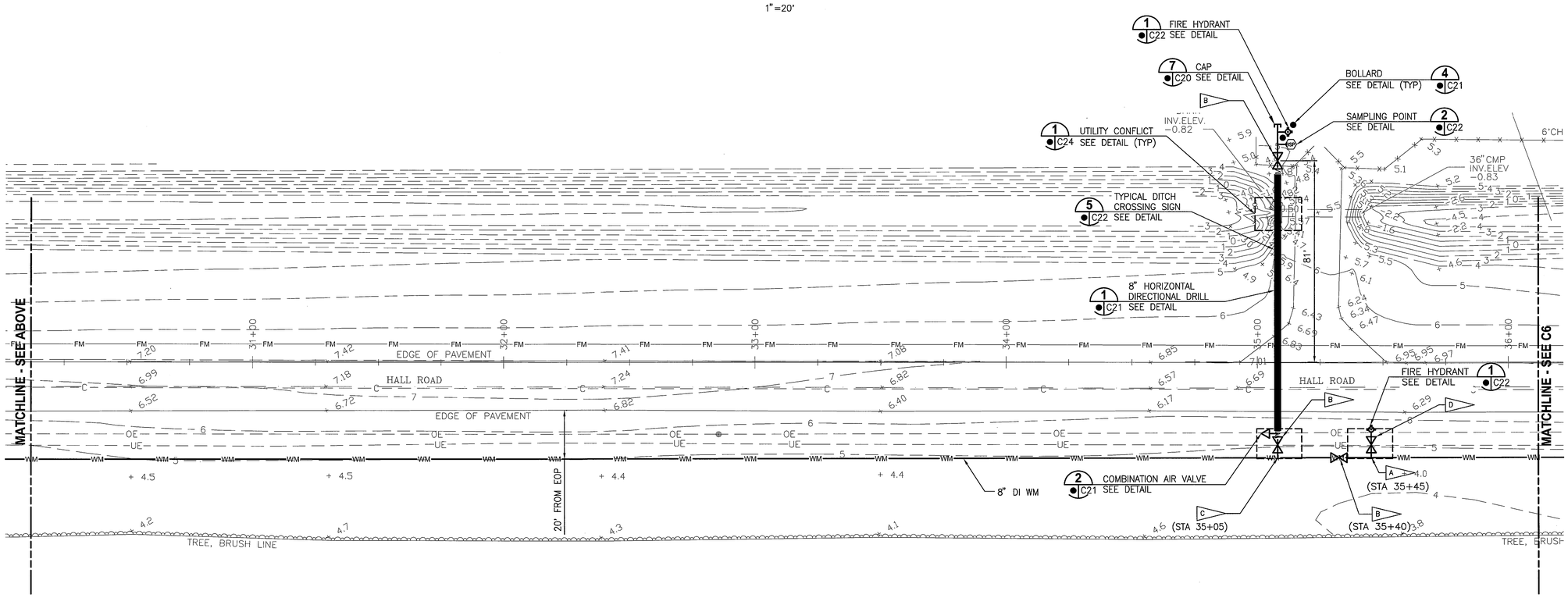

EAST HALL ROAD PLAN

1"=20'

THIS SPACE RESERVED

SYM	ZONE	DESCRIPTION	DATE	APPROVED
A		GENERAL REVISIONS	12/05/11	KM

REVISIONS

THIS DRAWING CREATED IN AUTOCAD 2010 FILE FORMAT AND WILL BE REVISED ONLY ON AN AUTOCAD SYSTEM. FILE: 14000189-C05.DWG

JONES EDMUNDS

730 NE WALDO ROAD, GAINESVILLE, FLORIDA 32641 / (352) 377-5821
3910 S WASHINGTON AVE, SUITE 210, TITUSVILLE, FLORIDA 32780 / (321) 269-2950

SIGNATURES	DATE
DRAWN J. ALLEN	12/05/11
CHECKED M. CLARK	12/05/11
SUBMITTED R. BEST	12/05/11
ST of LICENSURE: FL LICENSE NO: 69875	
M. CLARK	12/05/11
K. MILLER	12/5/11

NATIONAL AERONAUTICS AND SPACE ADMINISTRATION
JOHN F. KENNEDY SPACE CENTER, NASA
KENNEDY SPACE CENTER, FLORIDA

REVITALIZE WATER & WASTEWATER SYSTEMS - KARS PARK I

WATER MAIN ROUTING PLAN

FILE NO.	SIZE	DWG. NO.	REV
	F	79K38879	A
PROJ. NO. 96968.3		SHEET 10	

GRAPHIC SCALE
0 10 20 40
SCALE IN FEET
1"=20'

N

C5

NOTICE: When Government drawings, specifications, or other data are used for any purpose other than in connection with a definitely related Government procurement operation, the United States Government thereby incurs no responsibility nor obligation whatsoever; and the fact that the Government may have formulated, furnished, or in any way supplied the said drawings, specifications or other data is not to be regarded by implication or otherwise as in any manner licensing the holder or any other person or corporation, or conveying any rights or permission to manufacture, use, or sell any patented invention that may in any way be related thereto.

NOTES

- A — 8"X6" RMJ DI TEE.
- B — 8" RMJ GV.
- C — 8" RMJ DI TEE.
- D — 6" RMJ GV.

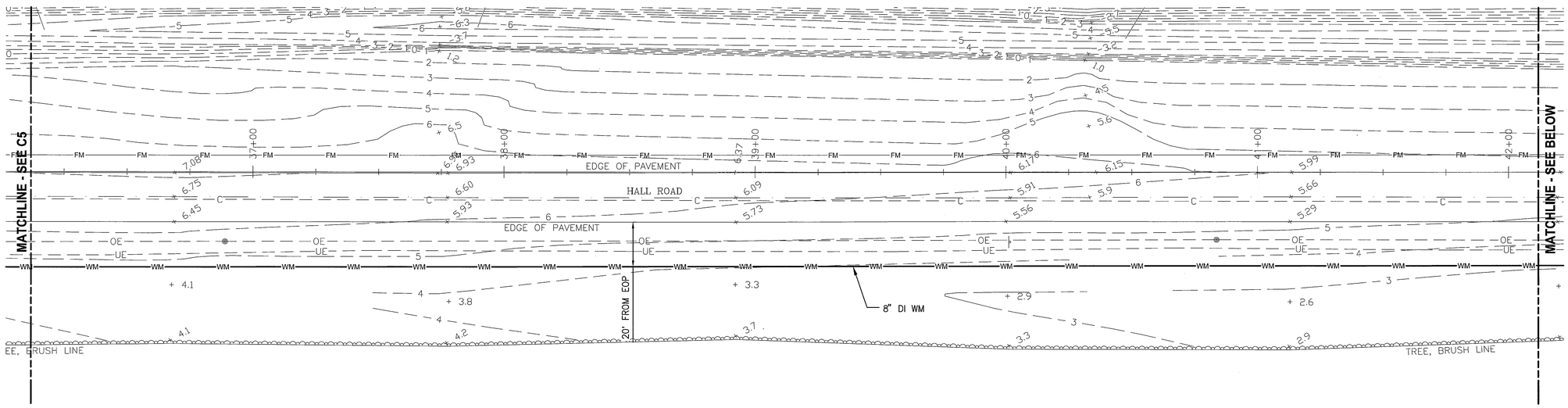

EAST HALL ROAD PLAN

1"=20'

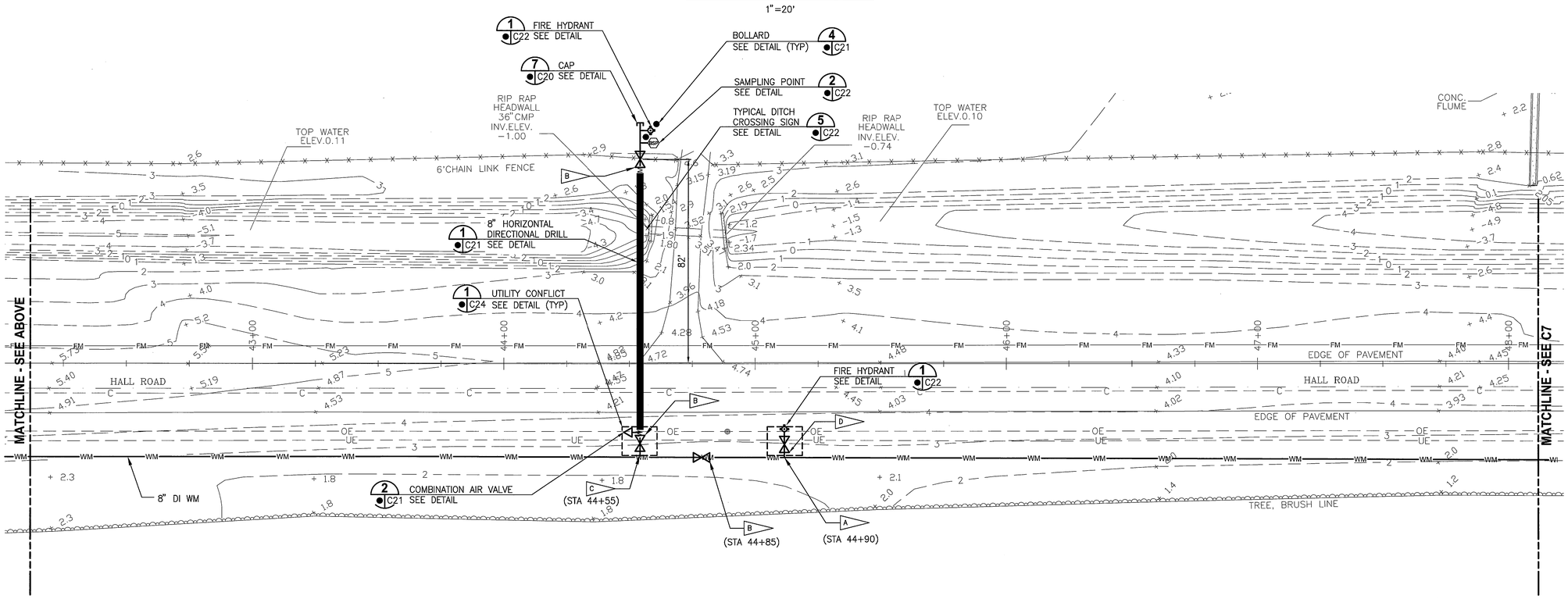

EAST HALL ROAD PLAN

1"=20'

GRAPHIC SCALE

0 10 20 40

SCALE IN FEET 1"=20'

N

C6

THIS SPACE RESERVED

SYM	ZONE	DESCRIPTION	DATE	APPROVED
A		GENERAL REVISIONS	12/05/11	

REVISIONS

THIS DRAWING CREATED IN AUTOCAD 2010 FILE FORMAT AND WILL BE REVISED ONLY ON AN AUTOCAD SYSTEM. FILE: 14000189-C06.DWG

JONES EDMUNDS
730 NE WALDO ROAD, GAINESVILLE, FLORIDA 32641 / (352) 377-5821
3910 S WASHINGTON AVE, SUITE 210, TITUSVILLE, FLORIDA 32780 / (321) 269-2950

SIGNATURES	DATE
DRAWN J. ALLEN	12/05/11
CHECKED M. CLARK	12/05/11
SUBMITTED R. BEST	12/05/11
ST of LICENSURE: FL LICENSE NO: 69875	
M. CLARK	12/05/11
K. MILLER	12/5/11

NATIONAL AERONAUTICS AND SPACE ADMINISTRATION
JOHN F. KENNEDY SPACE CENTER, NASA
KENNEDY SPACE CENTER, FLORIDA

REVITALIZE WATER & WASTEWATER SYSTEMS - KARS PARK I

WATER MAIN ROUTING PLAN

FILE NO.	SIZE	DWG. NO.	REV
	F	79K38879	A
PROJ. NO. 96968.3		SHEET 11	

NOTICE: When Government drawings, specifications, or other data are used for any purpose other than in connection with a definitely related Government procurement operation, the United States Government thereby incurs no responsibility nor obligation whatsoever; and the fact that the Government may have formulated, furnished, or in any way supplied the said drawings, specifications or other data is not to be regarded by implication or otherwise as in any manner licensing the holder or any other person or corporation, or conveying any rights or permission to manufacture, use, or sell any patented invention that may in any way be related thereto.

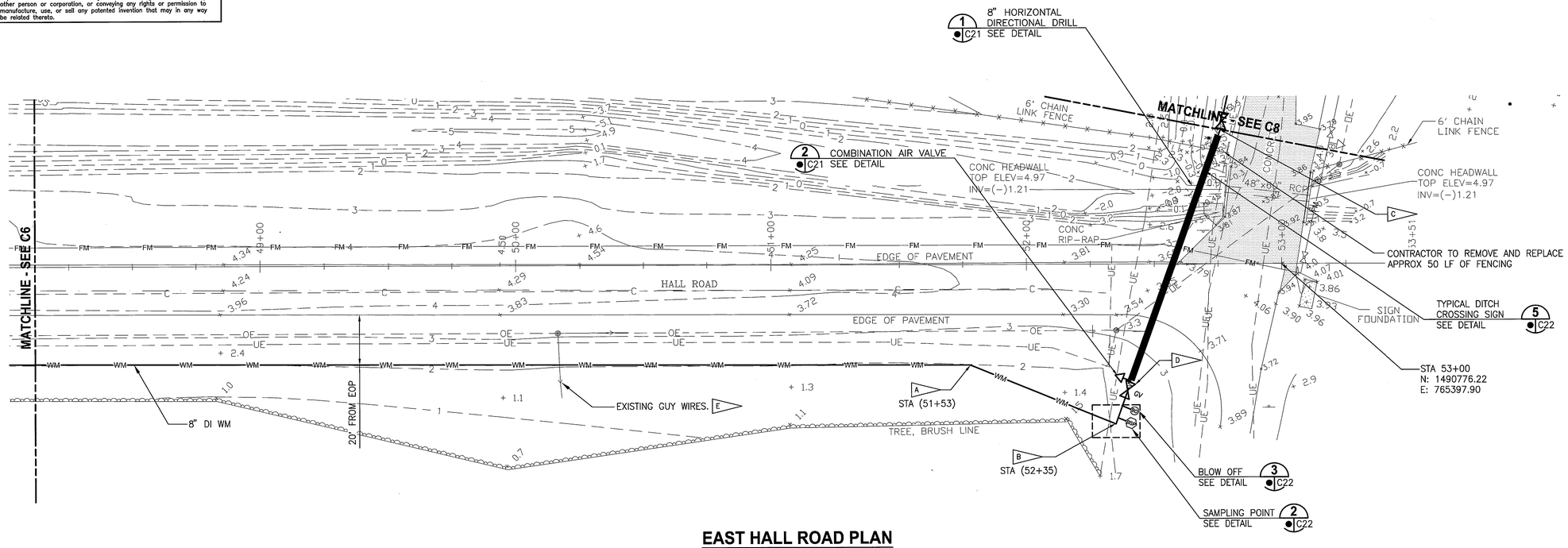

EAST HALL ROAD PLAN

1"=20'

NOTES

- A — 8" 22.5° RMJ BEND.
- B — 8" 90° RMJ BEND.
- C — 8" 11.25° RMJ BEND.
- D — 8" RMJ GV.
- E — CONTRACTOR TO COORDINATE RELOCATION OF GUY WIRE WITH CO AND POWER COMPANY IF NECESSARY.

GRAPHIC SCALE
0 10 20 40
SCALE IN FEET
1"=20'

N

C7

THIS SPACE RESERVED

SYM	ZONE	DESCRIPTION	DATE	APPROVED
A		GENERAL REVISIONS	12/05/11	KM

REVISIONS

THIS DRAWING CREATED IN AUTOCAD 2010 FILE FORMAT AND WILL BE REVISED ONLY ON AN AUTOCAD SYSTEM. FILE: 14000189-C07.DWG

JONES EDMUNDS
730 NE WALDO ROAD, GAINESVILLE, FLORIDA 32641 / (352) 377-5821
3910 S WASHINGTON AVE, SUITE 210, TITUSVILLE, FLORIDA 32780 / (321) 269-2950

SIGNATURES	DATE
DRAWN J. ALLEN	12/05/11
CHECKED M. CLARK	12/05/11
SUBMITTED R. BEST	12/05/11
ST of LICENSURE: FL LICENSE NO: 69875	
APPROVED M. CLARK	12/05/11
K. MILLER	12/5/11

NATIONAL AERONAUTICS AND SPACE ADMINISTRATION
JOHN F. KENNEDY SPACE CENTER, NASA
KENNEDY SPACE CENTER, FLORIDA

REVITALIZE WATER & WASTEWATER SYSTEMS - KARS PARK I

WATER MAIN ROUTING PLAN

FILE NO.	SIZE	DWG. NO.	REV
	F	79K38879	A
PROJ. NO. 96968.3		SHEET 12	

NOTICE: When Government drawings, specifications, or other data are used for any purpose other than in connection with a definitely related Government procurement operation, the United States Government thereby incurs no responsibility nor obligation whatsoever; and the fact that the Government may have formulated, furnished, or in any way supplied the said drawings, specifications or other data is not to be regarded by implication or otherwise as in any manner licensing the holder or any other person or corporation, or conveying any rights or permission to manufacture, use, or sell any patented invention that may in any way be related thereto.

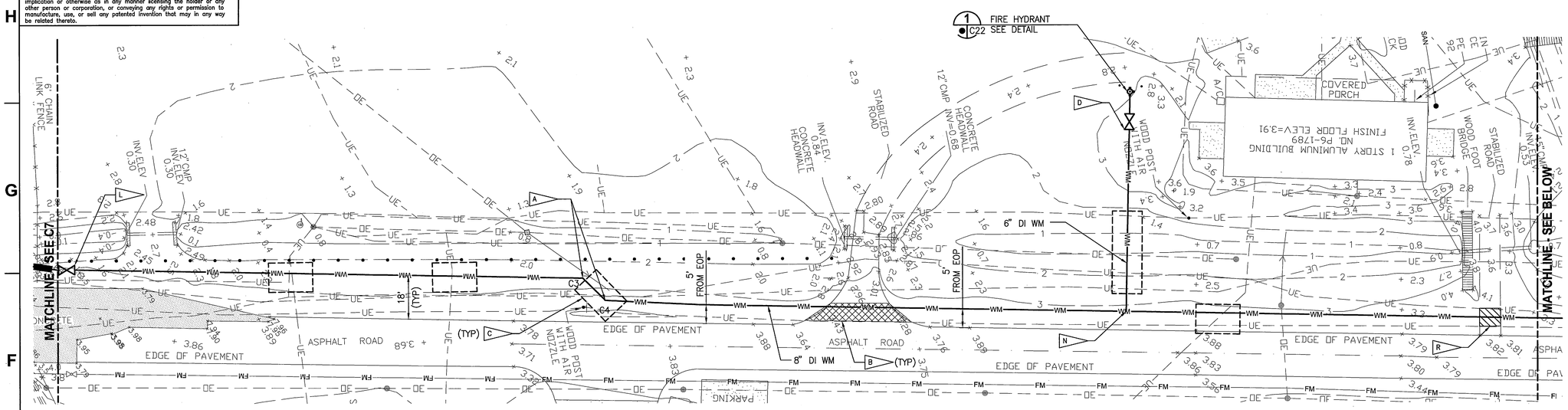

BANANA RIVER DRIVE PLAN

1"=20'

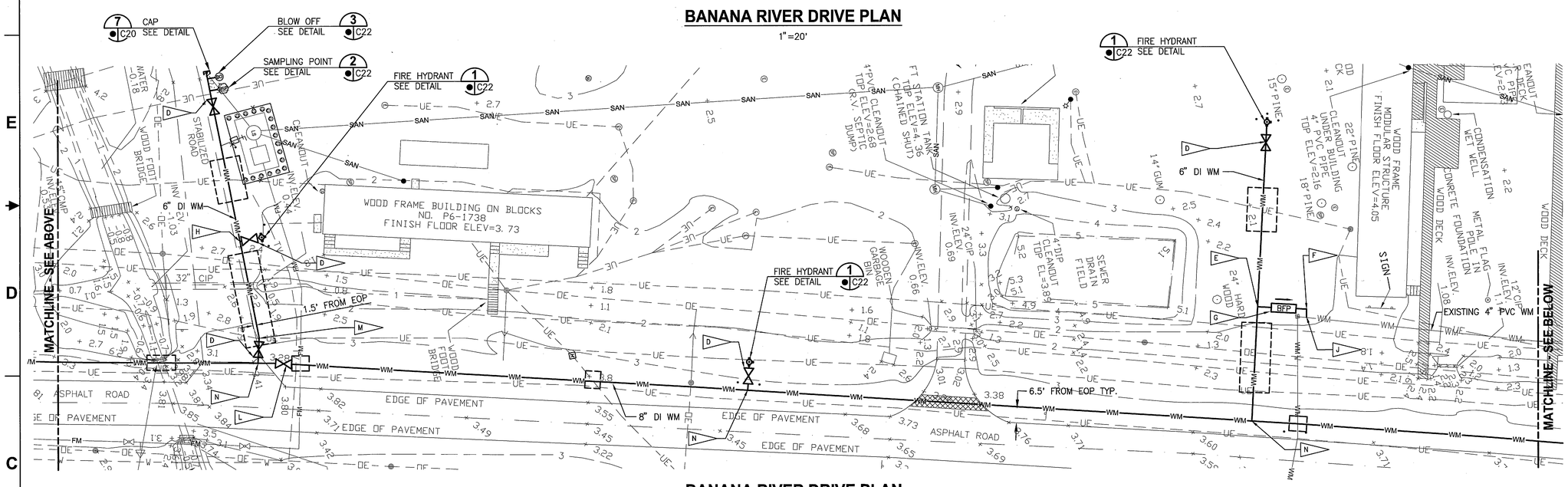

BANANA RIVER DRIVE PLAN

1"=20'

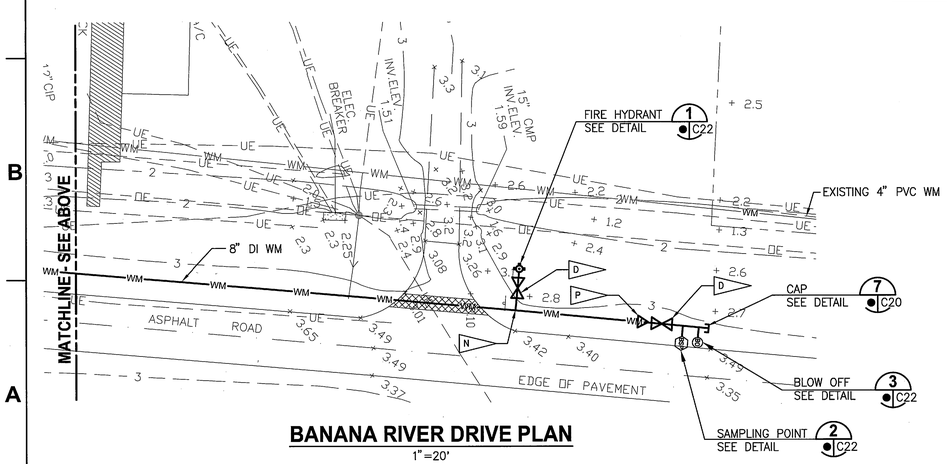

BANANA RIVER DRIVE PLAN

1"=20'

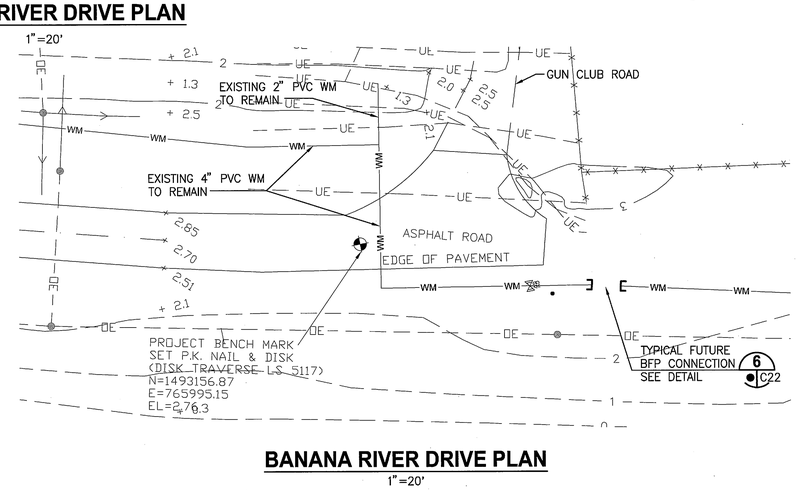

BANANA RIVER DRIVE PLAN

1"=20'

GRAPHIC SCALE

0 10 20 40

SCALE IN FEET 1"=20'

NOTES

- A — 8" 45° RMJ BEND.
- B — ASPHALT PAVEMENT RESTORATION SEE DETAIL 4 C20
- C — TYPICAL UTILITY CONFLICT SEE DETAIL 1 C24
- D — 6" RMJ GV.
- E — 6"x4" RMJ DI TEE.
- F — 4" 90° RMJ BEND.
- G — 4" RPBFP SEE DETAIL 5 C8 C21
- H — 6" RMJ DI TEE.
- J — 4"x4" TAPPING SLEEVE AND VALVE SEE DETAIL 9 C20
- K — EX 4" PVC WM.
- L — 8" RMJ GV.
- M — 6" 11.25 RMJ BEND.
- N — 8"x6" RMJ DI TEE.
- P — 8"x6" RMJ RED.
- R — LIMEROCK RESTORATION SEE DETAIL 5 C20

THIS SPACE RESERVED

SYM	ZONE	DESCRIPTION	DATE	APPROVED
A		GENERAL REVISIONS	10/31/11	

REVISIONS

THIS DRAWING CREATED IN AUTOCAD 2010 FILE FORMAT AND WILL BE REVISED ONLY ON AN AUTOCAD SYSTEM. FILE: 14000189-C08.DWG

JONES EDMUNDS
730 NE WALDO ROAD, GAINESVILLE, FLORIDA 32641 / (352) 377-5821
3910 S WASHINGTON AVE, SUITE 210, TITUSVILLE, FLORIDA 32780 / (321) 269-2950

SIGNATURES	DATE
DRAWN J. ALLEN	10/31/11
CHECKED M. CLARK	10/31/11
SUBMITTED R. BEST	10/31/11
ST of LICENSURE: FL LICENSE NO: 69875	
APPROVED M. CLARK	10/31/11
K. MILLER	11/1/11

NATIONAL AERONAUTICS AND SPACE ADMINISTRATION
JOHN F. KENNEDY SPACE CENTER, NASA
KENNEDY SPACE CENTER, FLORIDA

REVITALIZE WATER & WASTEWATER SYSTEMS - KARS PARK I

WATER MAIN ROUTING PLAN

FILE NO.	SIZE	DWG. NO.	REV
	F	79K38879	A

PROJ. NO. 96968.3 SHEET 13

C8

NOTICE: When Government drawings, specifications, or other data are used for any purpose other than in connection with a definitely related Government procurement operation, the United States Government thereby incurs no responsibility nor obligation whatsoever; and the fact that the Government may have formulated, furnished, or in any way supplied the said drawings, specifications or other data is not to be regarded by implication or otherwise as in any manner licensing the holder or any other person or corporation, or conveying any rights or permission to manufacture, use, or sell any patented invention that may in any way be related thereto.

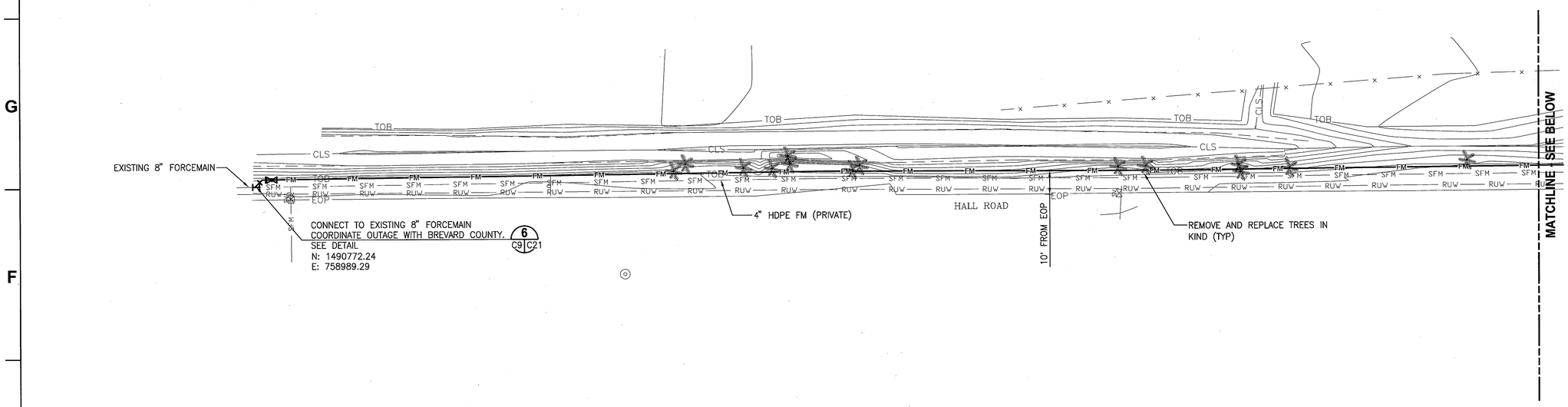

EAST HALL ROAD PLAN

1"=20'

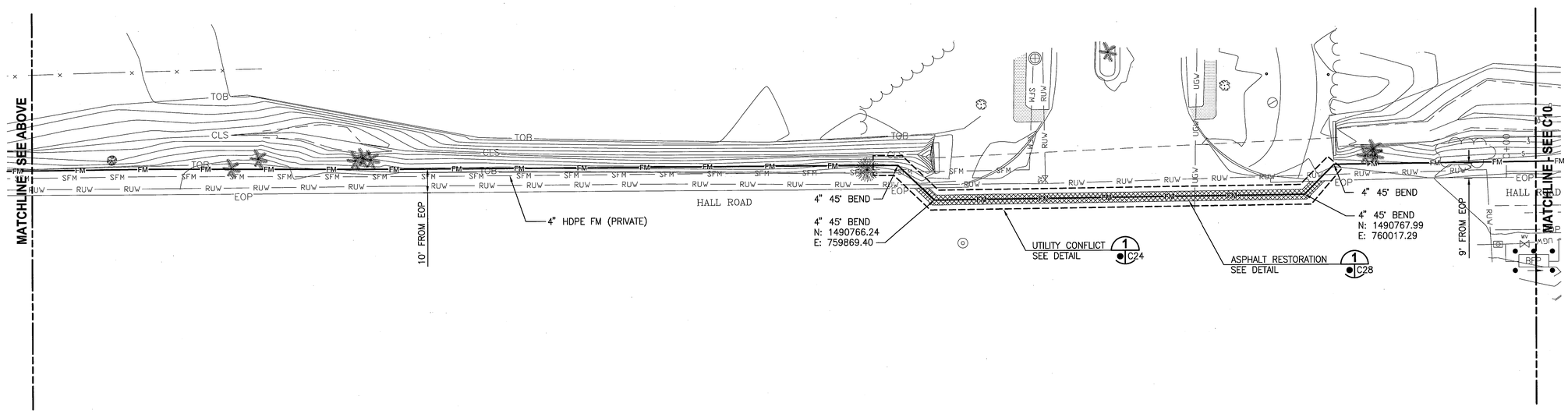

EAST HALL ROAD PLAN

1"=20'

STANDARD CONSTRUCTION NOTES FOR WORK CONDUCTED IN BREVARD COUNTY RIGHT OF WAYS

A. ALL DISTURBED AREAS WITHIN THE COUNTY RIGHT OF WAY SHALL BE SODDED. SEED AND MULCH IS NOT ACCEPTABLE.

B. ALL DIRECTIONAL BORES MUST EXTEND A MINIMUM 8 (EIGHT) FEET PAST THE EDGE OF PAVEMENT OF ANY ROADWAY OR COMMERCIAL DRIVEWAY. FOR PRIVATE RESIDENTIAL DRIVEWAYS THE BORE MUST EXTEND 3 (THREE) FEET PAST THE EDGE OF THE DRIVEWAY. FOR PRIVATE AND COMMERCIAL SIDEWALKS THE BORE MUST EXTEND 3 (THREE) FEET ON EITHER SIDE.

C. ALL DIRECTIONAL BORES SHALL BE IN ACCORDANCE WITH FDOT STANDARD SPECIFICATIONS FOR ROAD AND BRIDGE CONSTRUCTION SECTION 555, DIRECTIONAL BORES AND THE FDOT UTILITIES ACCOMMODATION MANUAL.

D. ANY DAMAGE TO THE EXISTING INFRASTRUCTURE, INCLUDING SIDEWALKS, BY THE CONTRACTOR MUST BE REPLACED PRIOR TO FINAL INSPECTION. SIDEWALK PATCHING IS NOT ACCEPTABLE.

E. A VISUAL OR MECHANICAL INTERIOR INSPECTION OF THE EXISTING CULVERT(S) WILL BE REQUIRED PRIOR TO FINAL INSPECTION.

F. A MINIMUM OF 18 (EIGHTEEN) INCHES OF SEPARATION WILL BE MAINTAINED WITH EXISTING UTILITIES.

G. EXISTING DRAINAGE SWALES AND/OR CULVERTS WILL BE MAINTAINED DURING PROPOSED TRENCH/BORE AND WILL BE RESTORED TO ORIGINAL CONDITION.

THIS SPACE RESERVED

SYM	ZONE	DESCRIPTION	DATE	APPROVED
A		GENERAL REVISIONS	10/31/11	

REVISIONS

THIS DRAWING CREATED IN AUTOCAD 2010 FILE FORMAT AND WILL BE REVISED ONLY ON AN AUTOCAD SYSTEM. FILE: 14000189-C09.DWG

JONES EDMUNDS
730 NE WALDO ROAD, GAINESVILLE, FLORIDA 32641 / (352) 377-5821
3910 S WASHINGTON AVE, SUITE 210, TITUSVILLE, FLORIDA 32780 / (321) 269-2950

SIGNATURES	DATE
DRAWN J. ALLEN	10/31/11
CHECKED M. CLARK	10/31/11
SUBMITTED R. BEST	10/31/11
ST of LICENSURE: FL LICENSE NO: 69875	
APPROVED M. CLARK	10/31/11
K. MILLER	11/1/11

NATIONAL AERONAUTICS AND SPACE ADMINISTRATION
JOHN F. KENNEDY SPACE CENTER, NASA
KENNEDY SPACE CENTER, FLORIDA

REVITALIZE WATER & WASTEWATER SYSTEMS - KARS PARK I

WASTEWATER ROUTING PLAN

FILE NO.	SIZE	DWG. NO.	REV
	F	79K38879	A
PROJ. NO. 96968.3		SHEET 14	

GRAPHIC SCALE
0 10 20 40
SCALE IN FEET
1"=20'

N

C9

NOTICE: When Government drawings, specifications, or other data are used for any purpose other than in connection with a definitely related Government procurement operation, the United States Government thereby incurs no responsibility nor obligation whatsoever; and the fact that the Government may have formulated, furnished, or in any way supplied the said drawings, specifications or other data is not to be regarded by implication or otherwise as in any manner licensing the holder or any other person or corporation, or conveying any rights or permission to manufacture, use, or sell any patented invention that may in any way be related thereto.

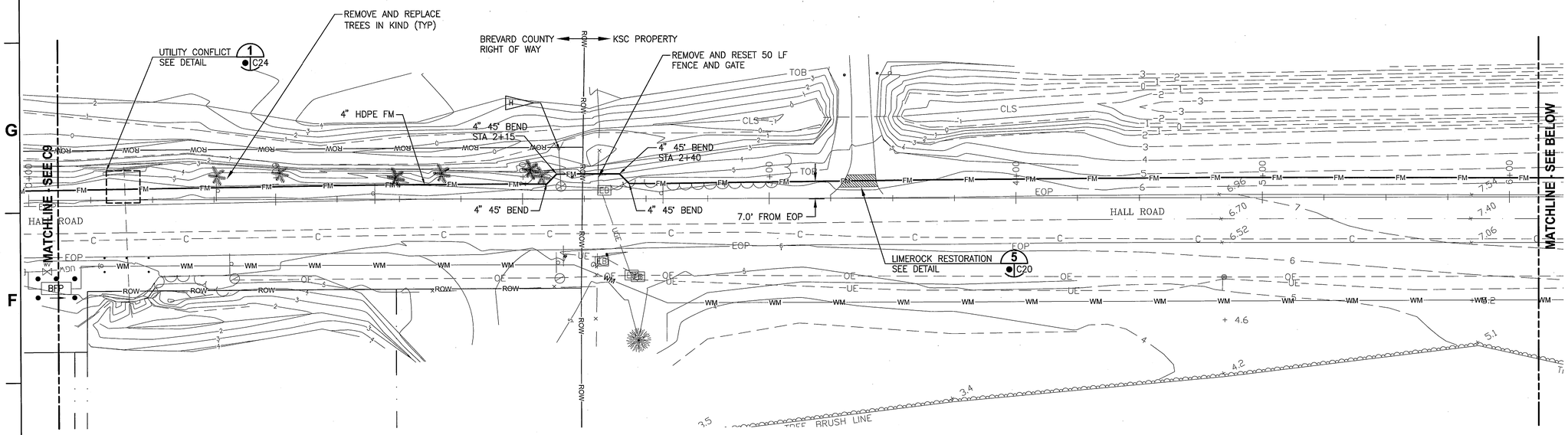

EAST HALL ROAD PLAN

1"=20'

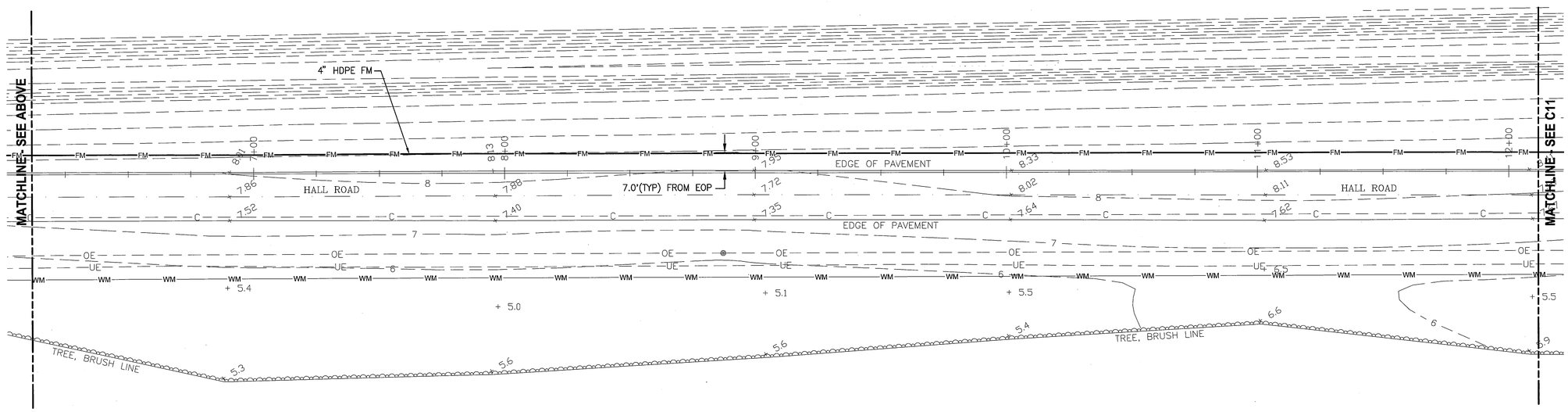

EAST HALL ROAD PLAN

1"=20'

STANDARD CONSTRUCTION NOTES FOR WORK CONDUCTED IN BREVARD COUNTY RIGHT OF WAYS

A. ALL DISTURBED AREAS WITHIN THE COUNTY RIGHT OF WAY SHALL BE SODDED. SEED AND MULCH IS NOT ACCEPTABLE.

B. ALL DIRECTIONAL BORES MUST EXTEND A MINIMUM 8 (EIGHT) FEET PAST THE EDGE OF PAVEMENT OF ANY ROADWAY OR COMMERCIAL DRIVEWAY. FOR PRIVATE RESIDENTIAL DRIVEWAYS THE BORE MUST EXTEND 3 (THREE) FEET PAST THE EDGE OF THE DRIVEWAY. FOR PRIVATE AND COMMERCIAL SIDEWALKS THE BORE MUST EXTEND 3 (THREE) FEET ON EITHER SIDE.

C. ALL DIRECTIONAL BORES SHALL BE IN ACCORDANCE WITH FDOT STANDARD SPECIFICATIONS FOR ROAD AND BRIDGE CONSTRUCTION SECTION 555, DIRECTIONAL BORES AND THE FDOT UTILITIES ACCOMMODATION MANUAL.

D. ANY DAMAGE TO THE EXISTING INFRASTRUCTURE, INCLUDING SIDEWALKS, BY THE CONTRACTOR MUST BE REPLACED PRIOR TO FINAL INSPECTION. SIDEWALK PATCHING IS NOT ACCEPTABLE.

E. A VISUAL OR MECHANICAL INTERIOR INSPECTION OF THE EXISTING CULVERT(S) WILL BE REQUIRED PRIOR TO FINAL INSPECTION.

F. A MINIMUM OF 18 (EIGHTEEN) INCHES OF SEPARATION WILL BE MAINTAINED WITH EXISTING UTILITIES.

G. EXISTING DRAINAGE SWALES AND/OR CULVERTS WILL BE MAINTAINED DURING PROPOSED TRENCH/BORE AND WILL BE RESTORED TO ORIGINAL CONDITION.

H. CONTRACTOR TO COORDINATE RELOCATION OF GUY WIRE WITH CO AND POWER COMPANY IF NECESSARY.

THIS SPACE RESERVED

SYM	ZONE	DESCRIPTION	DATE	APPROVED
A		GENERAL REVISIONS	10/31/11	

REVISIONS

THIS DRAWING CREATED IN AUTOCAD 2010 FILE FORMAT AND WILL BE REVISED ONLY ON AN AUTOCAD SYSTEM. FILE: 14000189-C10.DWG

JONES EDMUNDS
730 NE WALDO ROAD, GAINESVILLE, FLORIDA 32641 / (352) 377-5821
3910 S WASHINGTON AVE, SUITE 210, TITUSVILLE, FLORIDA 32780 / (321) 269-2950

SIGNATURES	DATE
DRAWN J. ALLEN	10/31/11
CHECKED M. CLARK	10/31/11
SUBMITTED R. BEST	10/31/11
ST of LICENSURE: FL LICENSE NO: 69875	
APPROVED M. CLARK	10/31/11
K. MILLER	11/1/11

NATIONAL AERONAUTICS AND SPACE ADMINISTRATION
JOHN F. KENNEDY SPACE CENTER, NASA
KENNEDY SPACE CENTER, FLORIDA

REVITALIZE WATER & WASTEWATER SYSTEMS - KARS PARK I

WASTEWATER ROUTING PLAN

FILE NO.	SIZE	DWG. NO.	REV
	F	79K38879	A

PROJ. NO. 96968.3 | SHEET 15

GRAPHIC SCALE
0 10 20 40
SCALE IN FEET
1" =20'

N

C10

NOTICE: When Government drawings, specifications, or other data are used for any purpose other than in connection with a definitely related Government procurement operation, the United States Government thereby incurs no responsibility nor obligation whatsoever; and the fact that the Government may have formulated, furnished, or in any way supplied the said drawings, specifications or other data is not to be regarded by implication or otherwise as in any manner licensing the holder or any other person or corporation, or conveying any rights or permission to manufacture, use, or sell any patented invention that may in any way be related thereto.

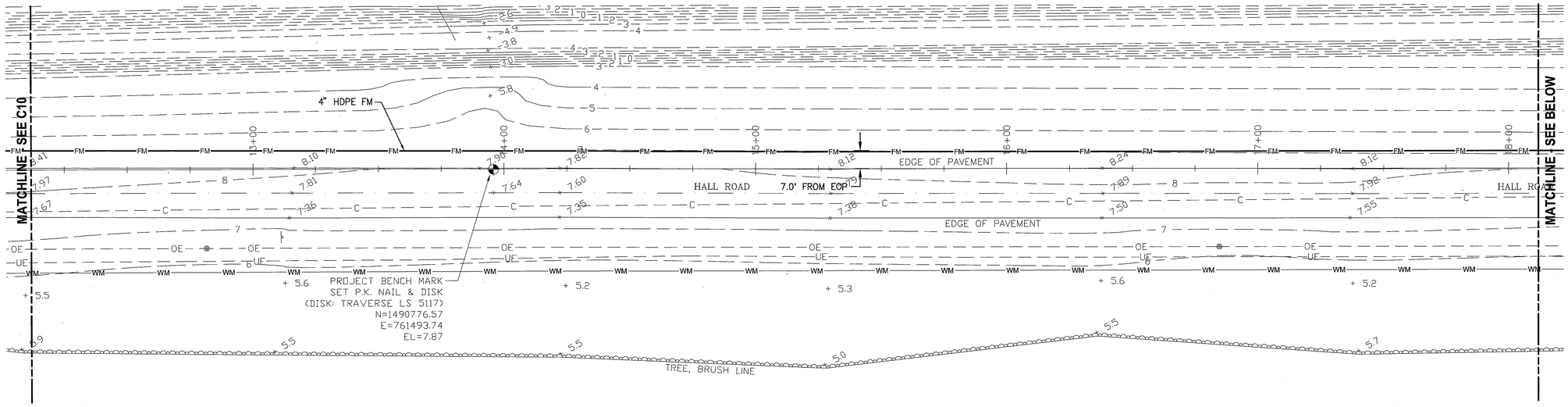

EAST HALL ROAD PLAN

1"=20'

EAST HALL ROAD PLAN

1"=20'

GRAPHIC SCALE
0 10 20 40
SCALE IN FEET
1"=20'

N

THIS SPACE RESERVED

SYM	ZONE	DESCRIPTION	DATE	APPROVED
A		GENERAL REVISIONS	10/31/11	

REVISIONS

THIS DRAWING CREATED IN AUTOCAD 2010 FILE FORMAT AND WILL BE REVISED ONLY ON AN AUTOCAD SYSTEM. FILE: 14000189-C11.DWG

JONES EDMUNDS
730 NE WALDO ROAD, GAINESVILLE, FLORIDA 32641 / (352) 377-5821
3910 S WASHINGTON AVE, SUITE 210, TITUSVILLE, FLORIDA 32780 / (321) 269-2950

SIGNATURES	DATE
DRAWN J. ALLEN	10/31/11
CHECKED M. CLARK	10/31/11
SUBMITTED R. BEST	10/31/11
ST of LICENSURE: FL LICENSE NO: 69875	
APPROVED M. CLARK	10/31/11
K. MILLER	11/2/11

NATIONAL AERONAUTICS AND SPACE ADMINISTRATION
JOHN F. KENNEDY SPACE CENTER, NASA
KENNEDY SPACE CENTER, FLORIDA

REVITALIZE WATER & WASTEWATER SYSTEMS - KARS PARK I

WASTEWATER ROUTING PLAN

FILE NO.	SIZE	DWG. NO.	REV
	F	79K38879	A

PROJ. NO. 96968.3 | SHEET 16

C11

NOTICE: When Government drawings, specifications, or other data are used for any purpose other than in connection with a definitely related Government procurement operation, the United States Government thereby incurs no responsibility nor obligation whatsoever; and the fact that the Government may have formulated, furnished, or in any way supplied the said drawings, specifications or other data is not to be regarded by implication or otherwise as in any manner licensing the holder or any other person or corporation, or conveying any rights or permission to manufacture, use, or sell any patented invention that may in any way be related thereto.

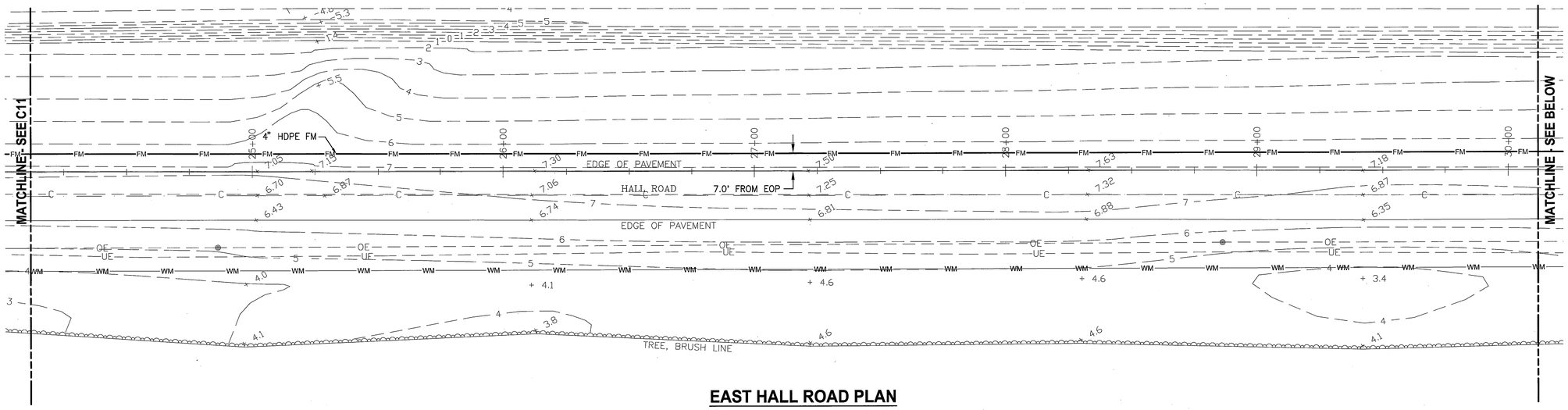

EAST HALL ROAD PLAN

1"=20'

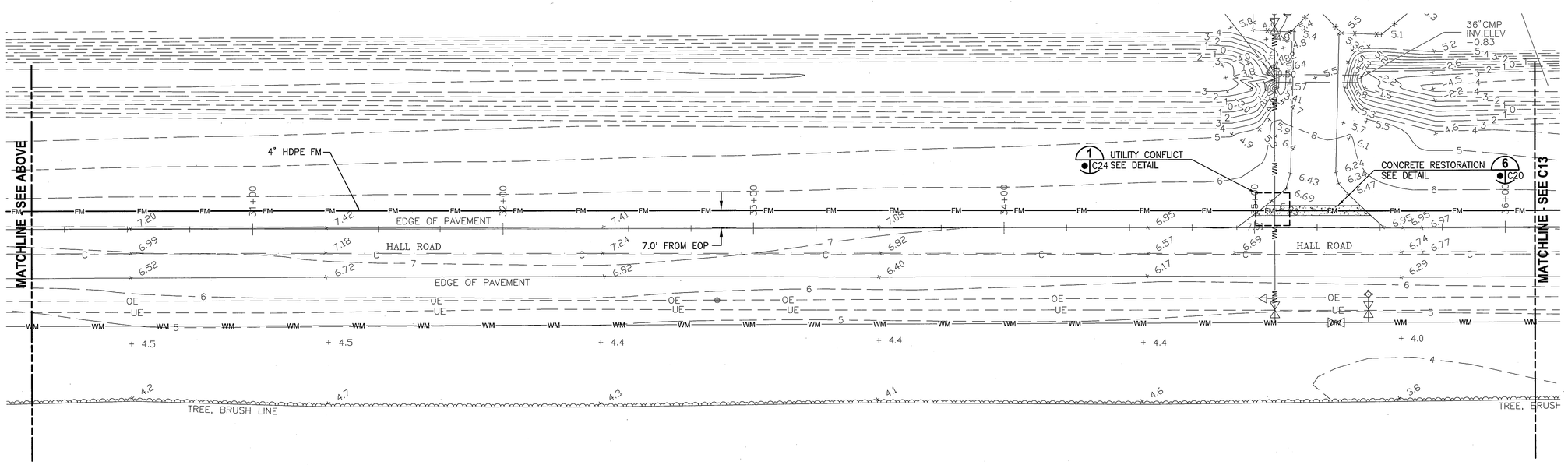

EAST HALL ROAD PLAN

1"=20'

THIS SPACE RESERVED

SYM	ZONE	DESCRIPTION	DATE	APPROVED
A		GENERAL REVISIONS	10/31/11	

REVISIONS

THIS DRAWING CREATED IN AUTOCAD 2010 FILE FORMAT AND WILL BE REVISED ONLY ON AN AUTOCAD SYSTEM. FILE: 14000189-C12.DWG

JONES EDMUNDS
730 NE WALDO ROAD, GAINESVILLE, FLORIDA 32641 / (352) 377-5821
3910 S WASHINGTON AVE, SUITE 210, TITUSVILLE, FLORIDA 32780 / (321) 269-2950

SIGNATURES	DATE
DRAWN J. ALLEN	10/31/11
CHECKED M. CLARK	10/31/11
SUBMITTED R. BEST	10/31/11
ST of LICENSURE: FL LICENSE NO: 69875	
APPROVED M. CLARK	10/31/11
K. MILLER	11/2/11

NATIONAL AERONAUTICS AND SPACE ADMINISTRATION
JOHN F. KENNEDY SPACE CENTER, NASA
KENNEDY SPACE CENTER, FLORIDA

REVITALIZE WATER & WASTEWATER SYSTEMS - KARS PARK I

WASTEWATER ROUTING PLAN

FILE NO.	SIZE	DWG. NO.	REV
	F	79K38879	A
PROJ. NO. 96968.3		SHEET 17	

GRAPHIC SCALE
0 10 20 40
SCALE IN FEET
1"=20'

N

C12

NOTICE: When Government drawings, specifications, or other data are used for any purpose other than in connection with a definitely related Government procurement operation, the United States Government thereby incurs no responsibility nor obligation whatsoever; and the fact that the Government may have formulated, furnished, or in any way supplied the said drawings, specifications or other data is not to be regarded by implication or otherwise as in any manner licensing the holder or any other person or corporation, or conveying any rights or permission to manufacture, use, or sell any patented invention that may in any way be related thereto.

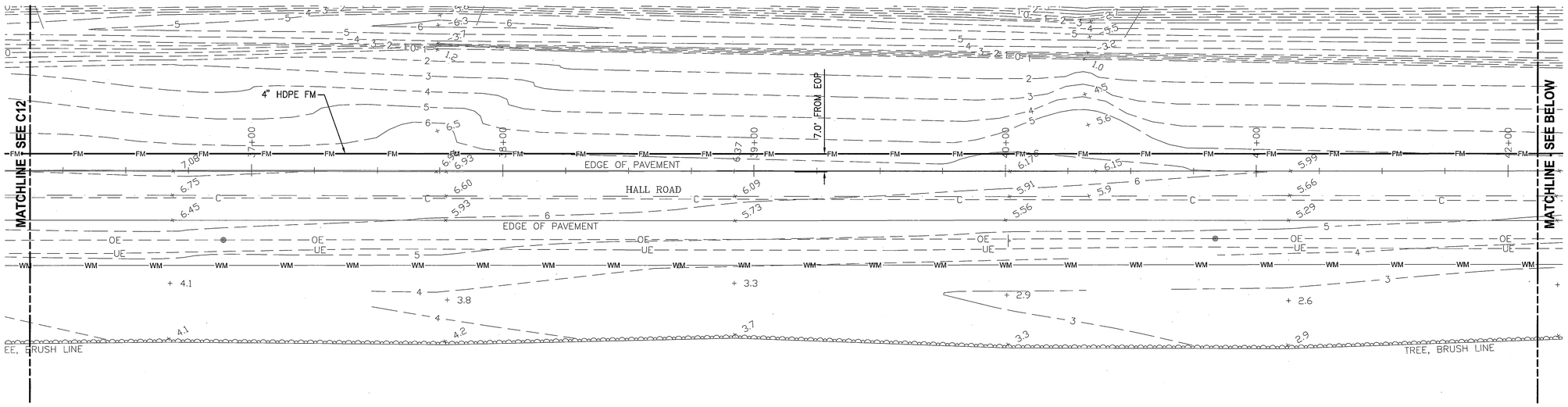

EAST HALL ROAD PLAN

1"=20'

EAST HALL ROAD PLAN

1"=20'

THIS SPACE RESERVED

SYM	ZONE	DESCRIPTION	DATE	APPROVED
A		GENERAL REVISIONS	10/31/11	KM

REVISIONS

THIS DRAWING CREATED IN AUTOCAD 2010 FILE FORMAT AND WILL BE REVISED ONLY ON AN AUTOCAD SYSTEM. FILE: 14000189-C13.DWG

JONES EDMUNDS

730 NE WALDO ROAD, GAINESVILLE, FLORIDA 32641 / (352) 377-5821
3910 S WASHINGTON AVE, SUITE 210, TITUSVILLE, FLORIDA 32780 / (321) 269-2950

SIGNATURES	DATE
DRAWN J. ALLEN	10/31/11
CHECKED M. CLARK	10/31/11
SUBMITTED R. BEST	10/31/11
ST of LICENSURE: FL LICENSE NO: 69875	
APPROVED M. CLARK	10/31/11
K. MILLER	11/2/11

NATIONAL AERONAUTICS AND SPACE ADMINISTRATION
JOHN F. KENNEDY SPACE CENTER, NASA
KENNEDY SPACE CENTER, FLORIDA

REVITALIZE WATER & WASTEWATER SYSTEMS - KARS PARK I

WASTEWATER ROUTING PLAN

FILE NO.	SIZE	DWG. NO.	REV
	F	79K38879	A
PROJ. NO. 96968.3		SHEET 18	

GRAPHIC SCALE
0 10 20 40
SCALE IN FEET
1"=20'

N

C13

NOTICE: When Government drawings, specifications, or other data are used for any purpose other than in connection with a definitely related Government procurement operation, the United States Government thereby incurs no responsibility nor obligation whatsoever; and the fact that the Government may have formulated, furnished, or in any way supplied the said drawings, specifications or other data is not to be regarded by implication or otherwise as in any manner licensing the holder or any other person or corporation, or conveying any rights or permission to manufacture, use, or sell any patented invention that may in any way be related thereto.

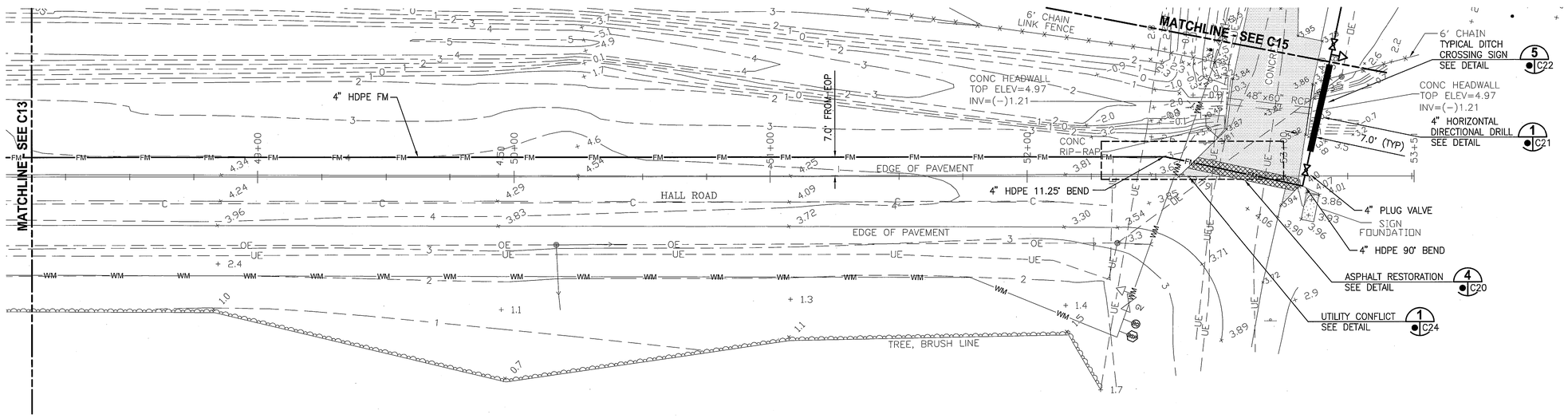

EAST HALL ROAD PLAN

1"=20'

GRAPHIC SCALE
0 10 20 40
SCALE IN FEET
1"=20'

-N-

C14

THIS SPACE RESERVED

SYM	ZONE	DESCRIPTION	DATE	APPROVED
A		GENERAL REVISIONS	10/31/11	KJA

REVISIONS

THIS DRAWING CREATED IN AUTOCAD 2010 FILE FORMAT AND WILL BE REVISED ONLY ON AN AUTOCAD SYSTEM. FILE: 14000189-C14.DWG

JONES EDMUNDS
730 NE WALDO ROAD, GAINESVILLE, FLORIDA 32641 / (352) 377-5821
3910 S WASHINGTON AVE, SUITE 210, TITUSVILLE, FLORIDA 32780 / (321) 269-2950

SIGNATURES	DATE
DRAWN J. ALLEN	10/31/11
CHECKED M. CLARK	10/31/11
SUBMITTED R. BEST	10/31/11
ST of LICENSURE: FL LICENSE NO: 69875	
APPROVED M. CLARK	10/31/11
K. MILLER	11/2/11

NATIONAL AERONAUTICS AND SPACE ADMINISTRATION
JOHN F. KENNEDY SPACE CENTER, NASA
KENNEDY SPACE CENTER, FLORIDA

REVITALIZE WATER & WASTEWATER SYSTEMS - KARS PARK I

WASTEWATER ROUTING PLAN

FILE NO.	SIZE	DWG. NO.	REV
	F	79K38879	A

PROJ. NO. 96968.3 | SHEET 19

NOTICE: When Government drawings, specifications, or other data are used for any purpose other than in connection with a definitely related Government procurement operation, the United States Government thereby incurs no responsibility nor obligation whatsoever; and the fact that the Government may have formulated, furnished, or in any way supplied the said drawings, specifications or other data is not to be regarded by implication or otherwise as in any manner licensing the holder or any other person or corporation, or conveying any rights or permission to manufacture, use, or sell any patented invention that may in any way be related thereto.

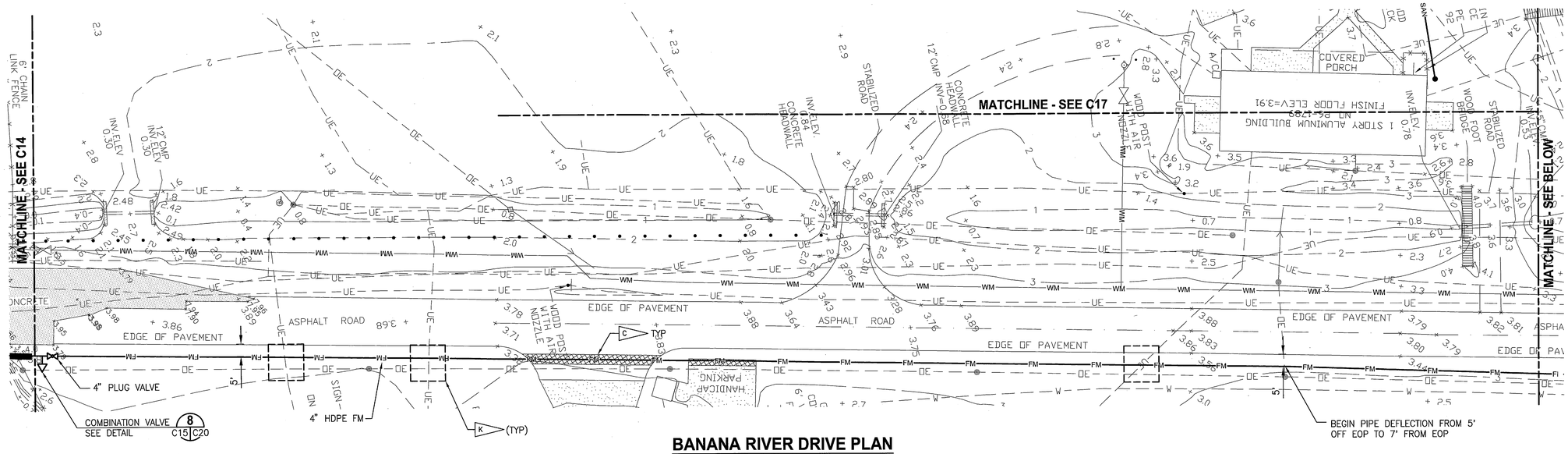

BANANA RIVER DRIVE PLAN

1"=20'

NOTES

A. 4" SANITARY SEWER CLEANOUT POINT OF CONNECTION (P6-1738) IE = 1.00 (FIELD LOCATE AND VERIFY) 1% MIN SLOPE.

B. DECOMMISSION AND DEMOLISH IN PLACE EXISTING 2000 GAL SEPTIC TANK & APPURTENANCES RESTORE TO EXISTING GRADE.

C. ASPHALT PAVEMENT RESTORATION 4 C20 SEE DETAIL (TYP)

D. 4" HDPE 90° BEND.

E. LIFT STATION #1 SEE PLAN AND SECTION 1 M1

F. FLOATING TURBIDITY BARRIER 2 C26 SEE DETAIL

G. MANHOLE DROP PIPE CONNECTION 4 M4 SEE DETAIL (TYP)

H. DOUBLE SWING GATE AND 6' HIGH FENCE 1 C25 SEE DETAIL

J. 3 GALLON HIBISCUS SHRUBS PLANTED 3 FEET ON CENTER AROUND LIFT STATION FENCE

K. TYPICAL UTILITY CONFLICT 1 C24 SEE DETAIL

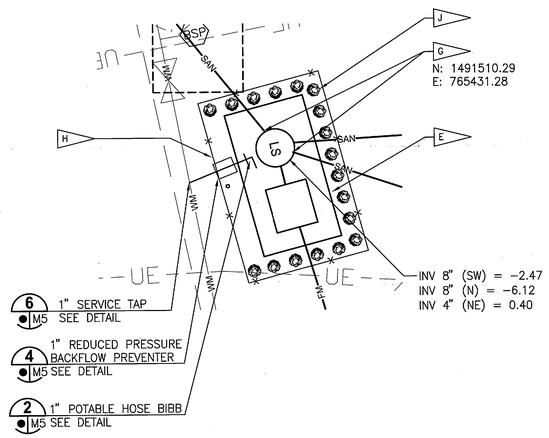

NOTES

A. PROVIDE HEALTHY, VIGOROUS STOCK GROWN IN A RECOGNIZED NURSERY IN ACCORDANCE WITH GOOD HORTICULTURAL PRACTICE AND FREE OF DISEASE, INSECTS, EGGS, LARVAE, AND DEFECTS SUCH AS KNOTS, SUNSCALD, INJURES, ABRASIONS, OR DISFIGUREMENT. ALL MATERIAL SHALL BE GRADED FLORIDA NO. 1 OR BETTER AS OUTLINED UNDER NEW GRADES AND STANDARDS FOR NURSERY PLANTS, DIVISION OF PLANT INDUSTRY, STATE OF FLORIDA, UNLESS OTHERWISE NOTED.

B. CONTRACTOR IS RESPONSIBLE FOR ESTABLISHING AND MAINTAINING SHRUBS UNTIL CONTRACT COMPLETION.

C. CONTRACTOR IS TO PROVIDE WEED TREATMENT IN PLANTING BED AND COVER PLANTING BED WITH MULCH.

ENLARGED LIFT STATION #1 PLAN DETAIL 1 C15

1"=10'

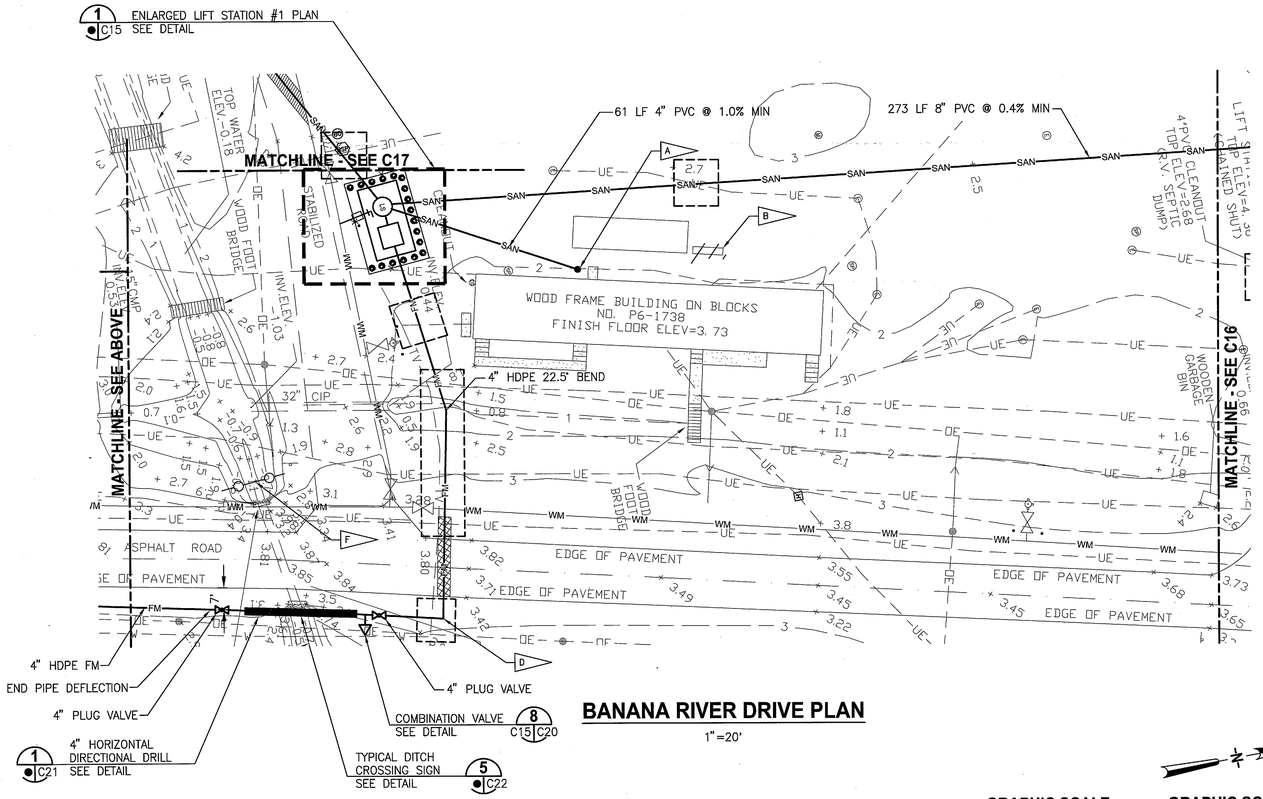

BANANA RIVER DRIVE PLAN

1"=20'

GRAPHIC SCALE 0 5 10 20 — SCALE IN FEET 1"=10'

GRAPHIC SCALE 0 10 20 40 — SCALE IN FEET 1"=20'

THIS SPACE RESERVED

SYM	ZONE	DESCRIPTION	DATE	APPROVED
A		GENERAL REVISIONS	10/31/11	

REVISIONS

THIS DRAWING CREATED IN AUTOCAD 2010 FILE FORMAT AND WILL BE REVISED ONLY ON AN AUTOCAD SYSTEM. FILE: 14000189-C15.DWG

JONES EDMUNDS

730 NE WALDO ROAD, GAINESVILLE, FLORIDA 32641 / (352) 377-5821
3910 S WASHINGTON AVE, SUITE 210, TITUSVILLE, FLORIDA 32780 / (321) 269-2950

SIGNATURES	DATE
DRAWN J. ALLEN	10/31/11
CHECKED M. CLARK	10/31/11
SUBMITTED R. BEST	10/31/11
ST of LICENSURE: FL LICENSE NO: 69875	
Approved M. CLARK	10/31/11
K. MILLER	11/2/11

NATIONAL AERONAUTICS AND SPACE ADMINISTRATION
JOHN F. KENNEDY SPACE CENTER, NASA
KENNEDY SPACE CENTER, FLORIDA

REVITALIZE WATER & WASTEWATER SYSTEMS - KARS PARK I

WASTEWATER ROUTING PLAN

FILE NO.	SIZE	DWG. NO.	REV
	F	79K38879	A
PROJ. NO. 96968.3		SHEET 20	

C15

NOTICE: When Government drawings, specifications, or other data are used for any purpose other than in connection with a definitely related Government procurement operation, the United States Government thereby incurs no responsibility nor obligation whatsoever; and the fact that the Government may have formulated, furnished, or in any way supplied the said drawings, specifications or other data is not to be regarded by implication or otherwise as in any manner licensing the holder or any other person or corporation, or conveying any rights or permission to manufacture, use, or sell any patented invention that may in any way be related thereto.

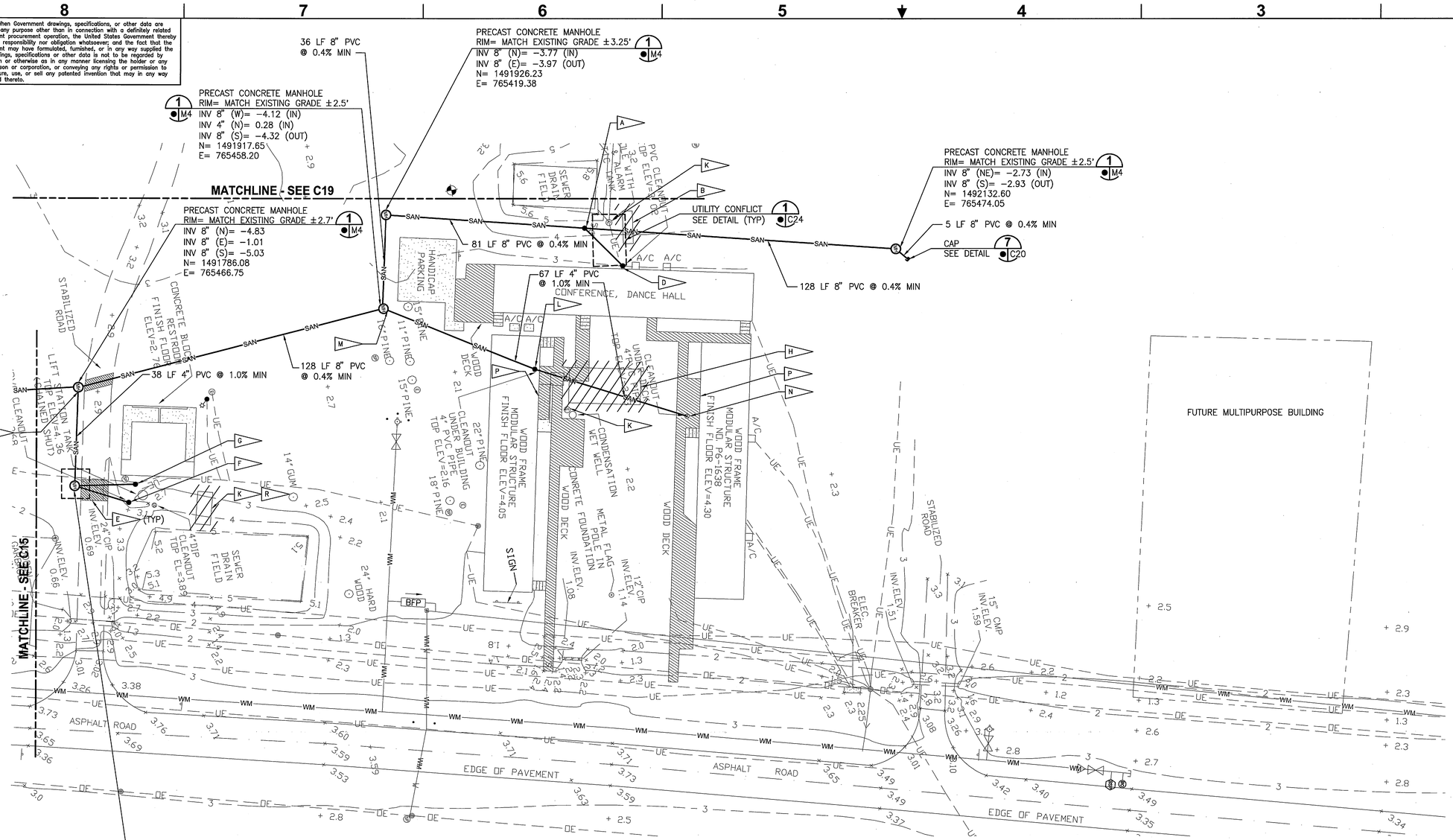

BANANA RIVER DRIVE PLAN

1"=20'

PRECAST CONCRETE MANHOLE
RIM= MATCH EXISTING GRADE ±2.7'
INV 4" (N)= -0.65
INV 4" (NE)= -0.65
INV 4" (W)= -0.85
N= 1491776.79
E= 765507.49

NOTES

- A — 8"x4" PVC WYE IE = -3.44.
- B — DECOMMISSION AND DEMOLISH IN PLACE EXISTING 900 GAL SEPTIC TANK, PUMP, AND APPURTENANCES.
- C — NOT USED.
- D — 4" SANITARY SEWER CLEANOUT POINT OF CONNECTION IE = 1.40' (FIELD LOCATE AND VERIFY).
- E — LIMEROCK RESTORATION SEE DETAIL 5/C20
- F — CONNECT TO EXISTING RV DUMP CLEANOUT WITH NEW 4" PVC @ 1% MIN SLOPE.
- G — 4" SANITARY SEWER CLEANOUT POINT OF CONNECTION ±1.0' (FIELD LOCATE AND VERIFY) 1% MIN SLOPE IE = 1.00.
- H — DECOMMISSION AND DEMOLISH IN PLACE EXISTING 2000 GAL SEPTIC TANK AND APPURTENANCES.
- J — NOT USED.
- K — REMOVE EXISTING ELECTRIC CIRCUIT FOR PUMP BACK TO PANEL.
- L — 4" SANITARY SEWER CLEANOUT POINT OF CONNECTION (UNDER TRAILER) IE = 0.95 (FIELD LOCATE AND VERIFY). (WORK UNDER TRAILER REQUIRED).
- M — MANHOLE DROP PIPE CONNECTION SEE DETAIL 4/M4
- N — 4" SANITARY SEWER CLEANOUT POINT OF CONNECTION (UNDER WOOD DECK). IE= 1.62 (FIELD LOCATE AND VERIFY). (WORK UNDER TRAILER/DECK REQUIRED).
- P — REMOVE AND REPLACE WOOD DECKING AS REQUIRED.
- R — DECOMMISSION AND DEMOLISH IN PLACE EXISTING 1800 GAL SEPTIC TANK, PUMPS, & APPURTENANCES.

GRAPHIC SCALE
0 10 20 40
SCALE IN FEET
1"=20'

THIS SPACE RESERVED

SYM	ZONE	DESCRIPTION	DATE	APPROVED
A		GENERAL REVISIONS	10/31/11	KEM

REVISIONS

THIS DRAWING CREATED IN AUTOCAD 2010 FILE FORMAT AND WILL BE REVISED ONLY ON AN AUTOCAD SYSTEM. FILE: 14000189-C16.DWG

JONES EDMUNDS
730 NE WALDO ROAD, GAINESVILLE, FLORIDA 32641 / (352) 377-5821
3910 S WASHINGTON AVE, SUITE 210, TITUSVILLE, FLORIDA 32780 / (321) 269-2950

SIGNATURES	DATE
DRAWN J. ALLEN	10/31/11
CHECKED M. CLARK	10/31/11
SUBMITTED R. BEST	10/31/11
ST of LICENSURE: FL LICENSE NO: 69875	
APPROVED M. CLARK	10/31/11
K. MILLER	11/2/11

NATIONAL AERONAUTICS AND SPACE ADMINISTRATION
JOHN F. KENNEDY SPACE CENTER, NASA
KENNEDY SPACE CENTER, FLORIDA

REVITALIZE WATER & WASTEWATER SYSTEMS - KARS PARK I

WASTEWATER ROUTING PLAN

FILE NO.	SIZE	DWG. NO.	REV
	F	79K38879	A

PROJ. NO. 96968.3 | SHEET 21

C16

NOTICE: When Government drawings, specifications, or other data are used for any purpose other than in connection with a definitely related Government procurement operation, the United States Government thereby incurs no responsibility nor obligation whatsoever; and the fact that the Government may have formulated, furnished, or in any way supplied the said drawings, specifications or other data is not to be regarded by implication or otherwise as in any manner licensing the holder or any other person or corporation, or conveying any rights or permission to manufacture, use, or sell any patented invention that may in any way be related thereto.

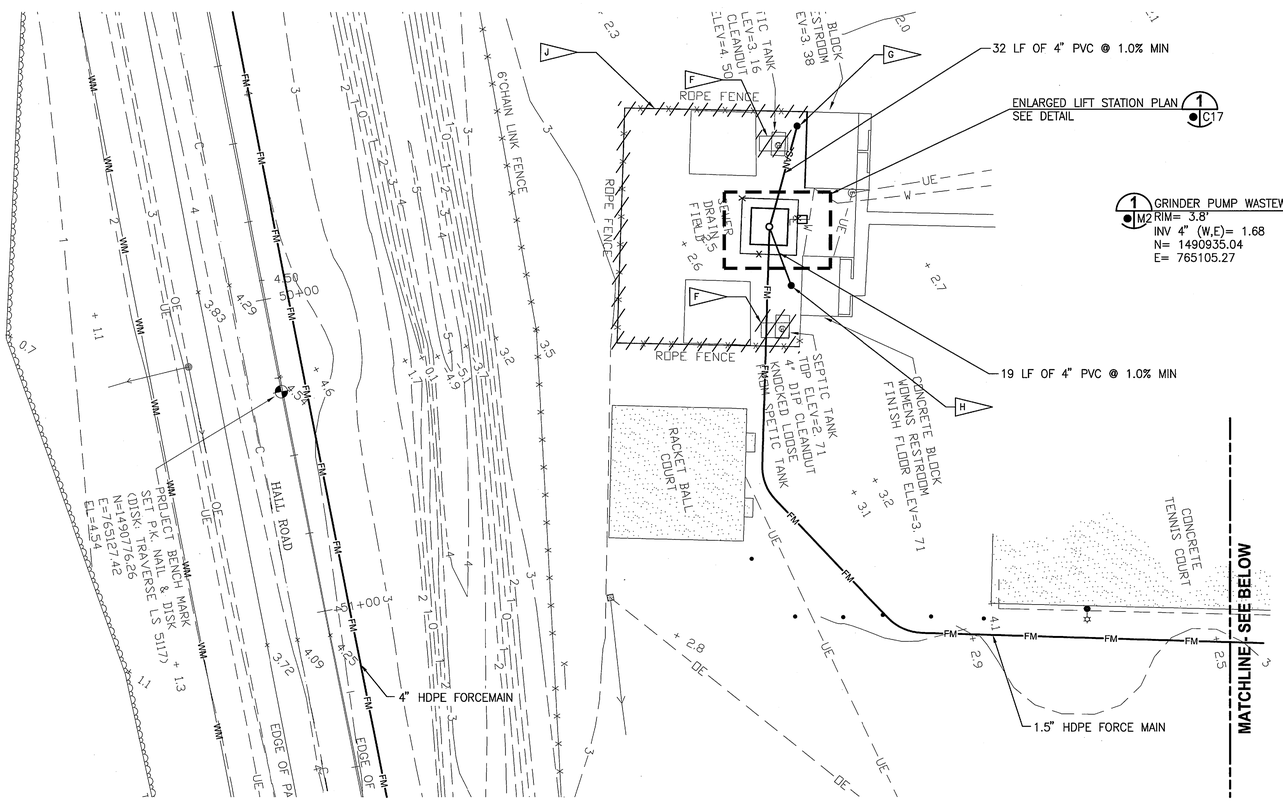

TENNIS COURTS PLAN

1"=20'

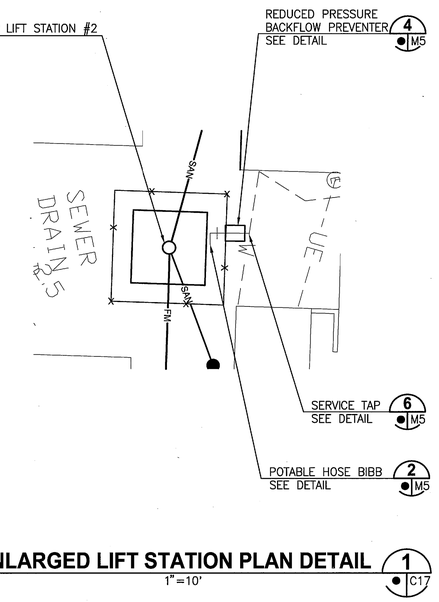

ENLARGED LIFT STATION PLAN DETAIL 1 C17

1"=10'

NOTES

- A — DECOMMISSION AND DEMOLISH IN PLACE EXISTING 1350 GAL SEPTIC TANK AND APPURTENANCES.
- B — LIMEROCK RESTORATION SEE DETAIL 5 C20
- C — FLOATING TURBIDITY BARRIER.
- D — 4" SANITARY SEWER NEW CLEANOUT POINT OF CONNECTION IE =2.50 (FIELD LOCATE AND VERIFY).
- E — 4" SANITARY SEWER NEW CLEANOUT POINT OF CONNECTION IE = 2.40 (FIELD LOCATE AND VERIFY).
- F — DECOMMISSION AND DEMOLISH IN PLACE EXISTING 1800 GAL SEPTIC TANK AND APPURTENANCES.
- G — 4" SANITARY SEWER NEW CLEANOUT POINT OF CONNECTION IE = 2.20 (FIELD LOCATE AND VERIFY).
- H — 4" SANITARY SEWER NEW CLEANOUT POINT OF CONNECTION IE = 2.30 (FIELD LOCATE AND VERIFY).
- J — DEMOLISH AND DISPOSE OF EXISTING ROPE FENCE AND POSTS.
- K — MANHOLE DROP PIPE CONNECTION 4 M4 SEE DETAIL

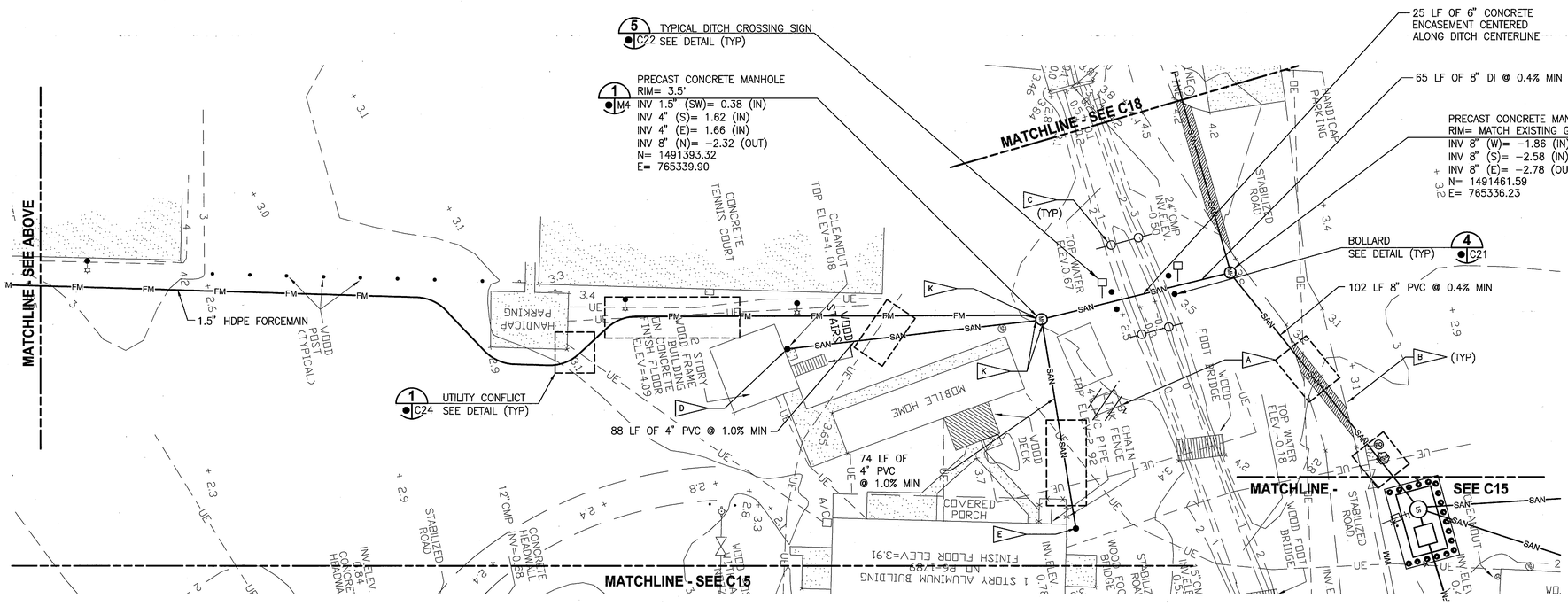

TENNIS COURTS PLAN

1"=20'

GRAPHIC SCALE 0 5 10 20 — SCALE IN FEET 1"=10'

GRAPHIC SCALE 0 10 20 40 — SCALE IN FEET 1"=20'

THIS SPACE RESERVED

SYM	ZONE	DESCRIPTION	DATE	APPROVED
A		GENERAL REVISIONS	10/31/11	

REVISIONS

THIS DRAWING CREATED IN AUTOCAD 2010 FILE FORMAT AND WILL BE REVISED ONLY ON AN AUTOCAD SYSTEM. FILE: 14000189-C17.DWG

JONES EDMUNDS
730 NE WALDO ROAD, GAINESVILLE, FLORIDA 32641 / (352) 377-5821
3910 S WASHINGTON AVE, SUITE 210, TITUSVILLE, FLORIDA 32780 / (321) 269-2950

SIGNATURES	DATE
DRAWN J. ALLEN	10/31/11
CHECKED M. CLARK	10/31/11
SUBMITTED R. BEST	10/31/11
ST of LICENSURE: FL LICENSE NO: 69875	
APPROVED M. CLARK	10/31/11
K. MILLER	11/2/11

NATIONAL AERONAUTICS AND SPACE ADMINISTRATION
JOHN F. KENNEDY SPACE CENTER, NASA
KENNEDY SPACE CENTER, FLORIDA

REVITALIZE WATER & WASTEWATER SYSTEMS - KARS PARK I

WASTEWATER ROUTING PLAN

FILE NO.	SIZE	DWG. NO.	REV
	F	79K38879	A

PROJ. NO. 96968.3 — SHEET 22

C17

NOTICE: When Government drawings, specifications, or other data are used for any purpose other than in connection with a definitely related Government procurement operation, the United States Government thereby incurs no responsibility nor obligation whatsoever; and the fact that the Government may have formulated, furnished, or in any way supplied the said drawings, specifications or other data is not to be regarded by implication or otherwise as in any manner licensing the holder or any other person or corporation, or conveying any rights or permission to manufacture, use, or sell any patented invention that may in any way be related thereto.

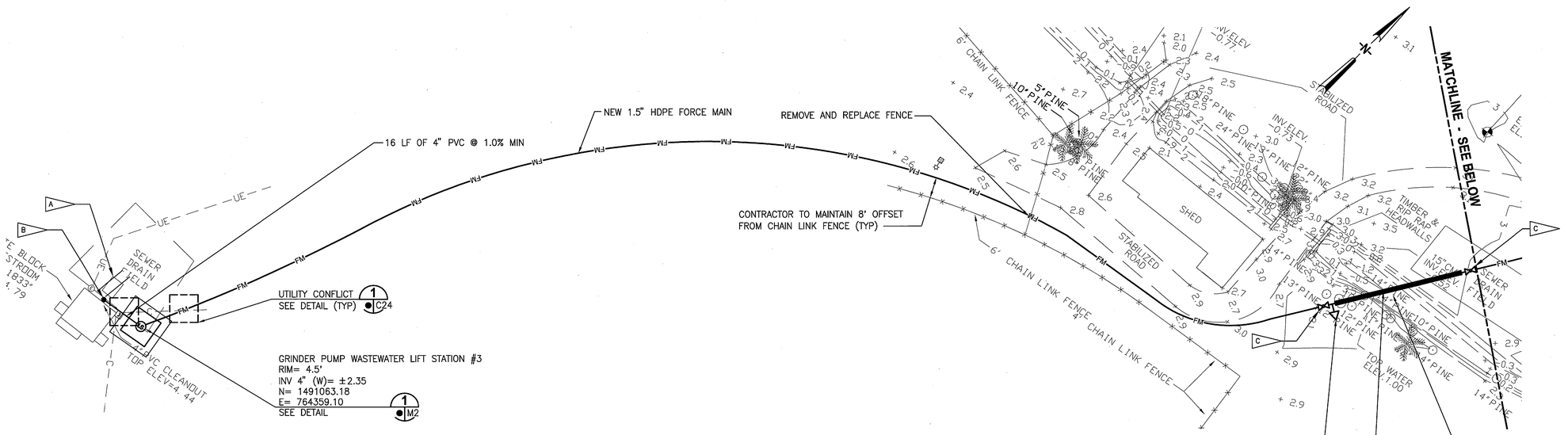

BALL PARK PLAN

1"=20'

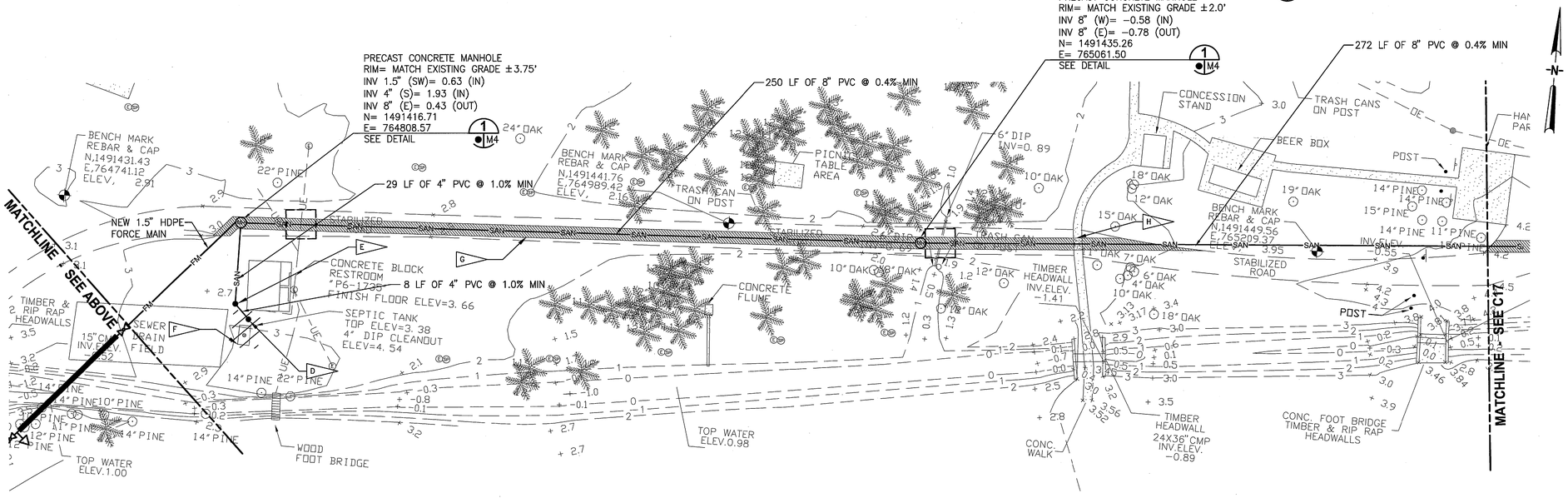

BALL PARK PLAN

1"=20'

NOTES

- A — DECOMMISSION AND DEMOLISH IN PLACE EXISTING SEPTIC TANK AND APPURTENANCES.
- B — 4" SANITARY SEWER NEW CLEANOUT POINT OF CONNECTION IE= 2.60 (FIELD LOCATE AND VERIFY).
- C — 1.5" PLUG VALVE
- D — 4" SANITARY SEWER NEW CLEANOUT PONT OF CONNECTION IE= 2.30 (FIELD LOCATE AND VERIFY).
- E — 4" PVC CLEANOUT. IE= 2.12.
- F — DECOMMISSION AND DEMOLISH IN PLACE EXISTING 1800 GAL SEPTIC TANK AND APPURTENANCES.
- G — LIMEROCK RESTORATION. SEE DETAIL 5 C20
- H — REMOVE EXISTING SIDEWALK AND RESTORE. SEE DETAIL 4 C22

GRAPHIC SCALE

0 10 20 40

SCALE IN FEET 1"=20'

THIS SPACE RESERVED

SYM	ZONE	DESCRIPTION	DATE	APPROVED
A		GENERAL REVISIONS	10/31/11	

REVISIONS

THIS DRAWING CREATED IN AUTOCAD 2010 FILE FORMAT AND WILL BE REVISED ONLY ON AN AUTOCAD SYSTEM. FILE: 14000189-C18.DWG

JONES EDMUNDS
730 NE WALDO ROAD, GAINESVILLE, FLORIDA 32641 / (352) 377-5821
3910 S WASHINGTON AVE, SUITE 210, TITUSVILLE, FLORIDA 32780 / (321) 269-2950

SIGNATURES	DATE
DRAWN J. ALLEN	10/31/11
CHECKED M. CLARK	10/31/11
SUBMITTED R. BEST	10/31/11
ST of LICENSURE: FL LICENSE NO: 69875	
Approved M. CLARK	10/31/11
K. MILLER	11/2/11

NATIONAL AERONAUTICS AND SPACE ADMINISTRATION
JOHN F. KENNEDY SPACE CENTER, NASA
KENNEDY SPACE CENTER, FLORIDA

REVITALIZE WATER & WASTEWATER SYSTEMS - KARS PARK I

WASTEWATER ROUTING PLAN

FILE NO.	SIZE	DWG. NO.	REV
	F	79K38879	A

PROJ. NO. 96968.3 SHEET 23

C18

NOTICE: When Government drawings, specifications, or other data are used for any purpose other than in connection with a definitely related Government procurement operation, the United States Government thereby incurs no responsibility nor obligation whatsoever; and the fact that the Government may have formulated, furnished, or in any way supplied the said drawings, specifications or other data is not to be regarded by implication or otherwise as in any manner licensing the holder or any other person or corporation, or conveying any rights or permission to manufacture, use, or sell any patented invention that may in any way be related thereto.

NOTES

A. DECOMMISSION AND COMPLETELY DEMOLISH AND REMOVE EXISTING 2,000 GAL SEPTIC TANK AND APPURTENANCES.

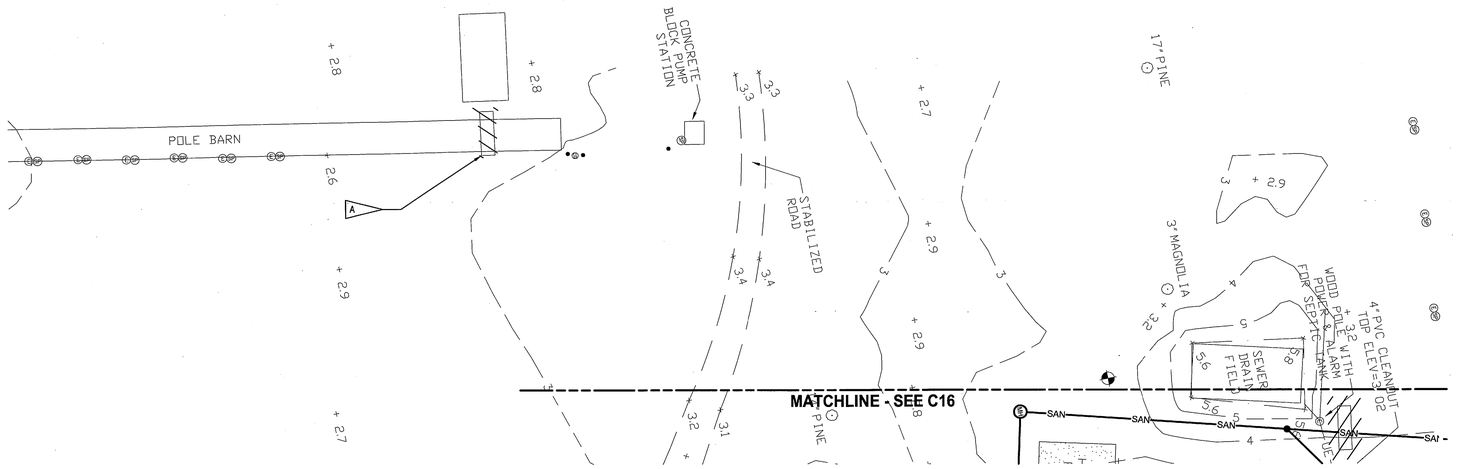

BANANA RIVER DRIVE PLAN

1"=20'

GRAPHIC SCALE

0 10 20 40

SCALE IN FEET
1"=20'

THIS SPACE RESERVED

SYM	ZONE	DESCRIPTION	DATE	APPROVED
A		GENERAL REVISIONS	10/31/11	

REVISIONS

THIS DRAWING CREATED IN AUTOCAD 2010 FILE FORMAT AND WILL BE REVISED ONLY ON AN AUTOCAD SYSTEM. FILE: 14000189-C19.DWG

JONES EDMUNDS
730 NE WALDO ROAD, GAINESVILLE, FLORIDA 32641 / (352) 377-5821
3910 S WASHINGTON AVE, SUITE 210, TITUSVILLE, FLORIDA 32780 / (321) 269-2950

SIGNATURES	DATE
DRAWN J. ALLEN	10/31/11
CHECKED M. CLARK	10/31/11
SUBMITTED R. BEST	10/31/11
ST of LICENSURE: FL LICENSE NO: 69875	
Approved M. CLARK	10/31/11
K. MILLER	11/2/11

NATIONAL AERONAUTICS AND SPACE ADMINISTRATION
JOHN F. KENNEDY SPACE CENTER, NASA
KENNEDY SPACE CENTER, FLORIDA

REVITALIZE WATER & WASTEWATER SYSTEMS - KARS PARK I

WASTEWATER ROUTING PLAN

FILE NO.	SIZE	DWG. NO.	REV
	F	79K38879	A
PROJ. NO. 96968.3		SHEET 24	

C19

NOTICE: When Government drawings, specifications, or other data are used for any purpose other than in connection with a definitely related Government procurement operation, the United States Government thereby incurs no responsibility nor obligation whatsoever; and the fact that the Government may have formulated, furnished, or in any way supplied the said drawings, specifications or other data is not to be regarded by implication or otherwise as in any manner licensing the holder or any other person or corporation, or conveying any rights or permission to manufacture, use, or sell any patented invention that may in any way be related thereto.

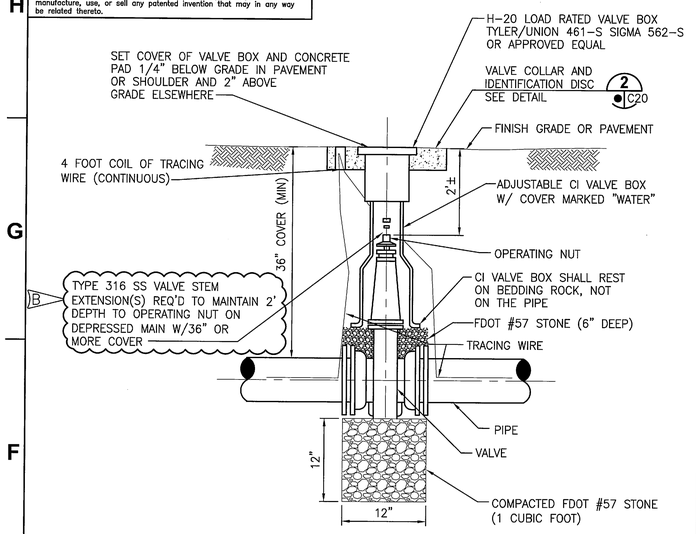

GATE VALVE BOX DETAIL 1
NTS C20

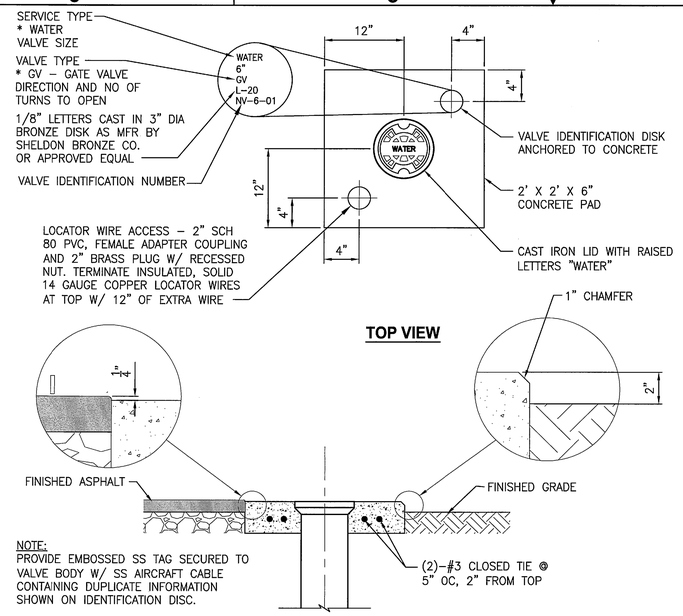

WATER VALVE COLLAR AND IDENTIFICATION DISK DETAIL 2
NTS C20

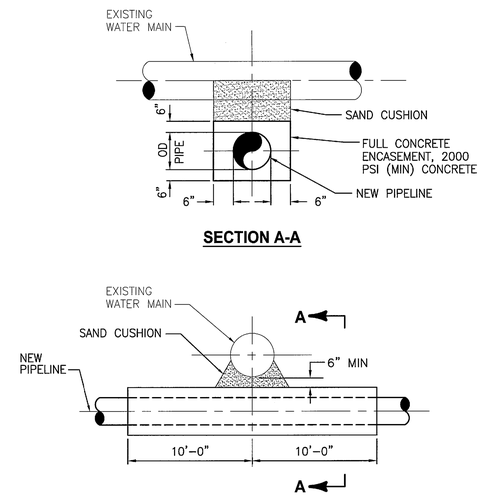

CONCRETE ENCASEMENT DETAIL 3
NTS C20

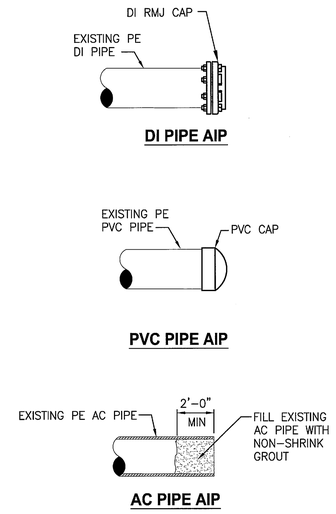

CAP DETAIL 7
NTS C20

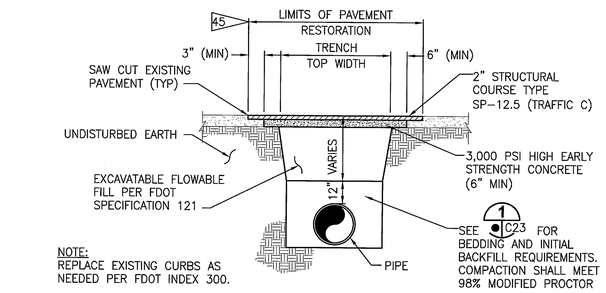

ASPHALT PAVEMENT RESTORATION DETAIL 4
NTS C20

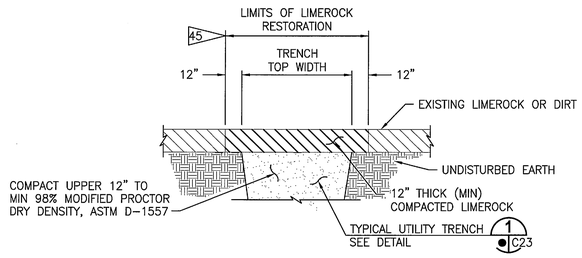

LIMEROCK RESTORATION DETAIL 5
NTS C20

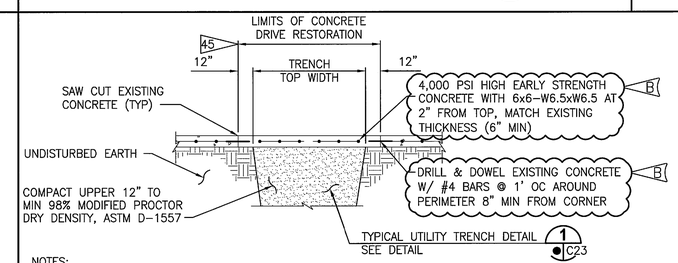

NOTES:
A. DRILL AND DOWEL 1 LOCATION EACH SIDE FOR CURB REPAIR.
B. MATCH EXISTING GRADE AND FINISH.
C. REPLACE EXISTING CURBS AS NEEDED PER FDOT INDEX 300.
D. WATER TO CEMENT RATIO SHALL NOT EXCEED 0.45
E. PLACE CONTRACTION JOINTS @12' OC (MAX)
F. CONCRETE SHALL BE CURED MOIST, BY SPRAYING OR FOGGING, FOR FIRST 48 HOURS (MIN)

CONCRETE RESTORATION DETAIL 6
NTS C20

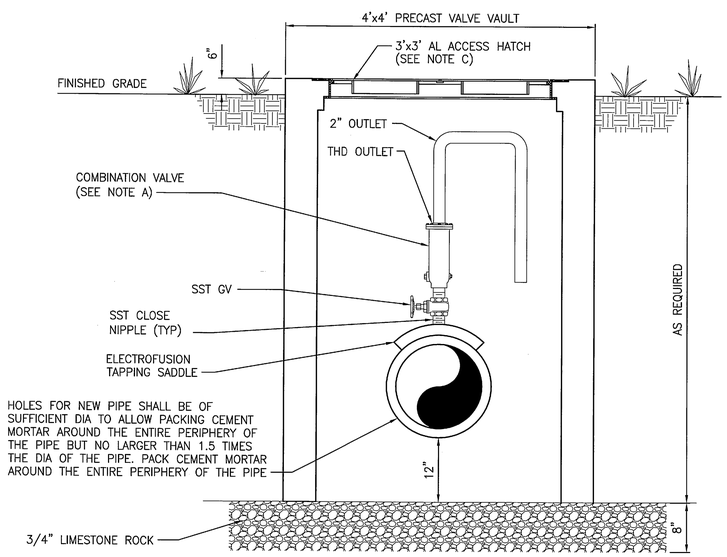

NOTES:
A. FOR SEWAGE FORCE MAINS, REPLACEMENT VALVE SIZE SHALL MATCH EXISTING VALVE TO BE REPLACED.
B. THE VALVE VAULT IS NOT DESIGNED FOR VEHICULAR TRAFFIC LOADS AND IS NOT INTENDED FOR PLACEMENT WITHIN THE TRAVELED WAY.
C. CAST IN PLACE ALUMINUM ACCESS HATCH SHALL BE PER SPECIFICATION SECTION 05 50 13.

TYPICAL UNDERGROUND COMBINATION AIR RELEASE VALVE DETAIL 8
NTS C15 C20

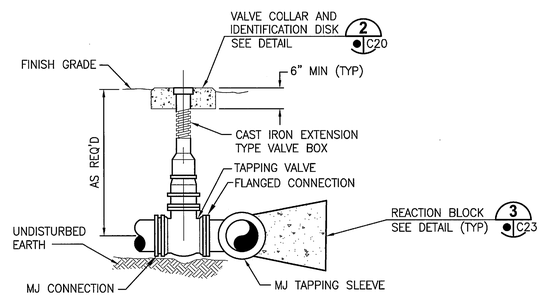

NOTE:
PROVIDE TYPE 316 SS STEM EXTENSION AS REQUIRED. OPERATING NUT TO BE WITHIN 12" OF GROUND LEVEL CHAMFER EXPOSED CONCRETE EDGES 3/4" @ 45°.
B

WET TAPPING SLEEVE AND VALVE DETAIL 9
NTS C20

THIS SPACE RESERVED

SYM	ZONE	DESCRIPTION	DATE	APPROVED
B		REVISE DETAILS 1, 6 & 9	03/07/12	
A		GENERAL REVISIONS	12/05/11	

REVISIONS

THIS DRAWING CREATED IN AUTOCAD 2010 FILE FORMAT AND WILL BE REVISED ONLY ON AN AUTOCAD SYSTEM. FILE: 14000189-C20.DWG

JONES EDMUNDS
730 NE WALDO ROAD, GAINESVILLE, FLORIDA 32641 / (352) 377-5821
3910 S WASHINGTON AVE, SUITE 210, TITUSVILLE, FLORIDA 32780 / (321) 269-2950

SIGNATURES	DATE
DRAWN J. ALLEN	12/05/11
CHECKED M. CLARK	12/05/11
SUBMITTED R. BEST	12/05/11
ST of LICENSURE: FL LICENSE NO: 69875	
M. CLARK	
K. MILLER	

NATIONAL AERONAUTICS AND SPACE ADMINISTRATION
JOHN F. KENNEDY SPACE CENTER, NASA
KENNEDY SPACE CENTER, FLORIDA

REVITALIZE WATER & WASTEWATER SYSTEMS - KARS PARK I

DETAILS

FILE NO.	SIZE	DWG. NO.	REV
	F	79K38879	B
PROJ. NO. 96968.3		SHEET 25	

C20

NOTICE: When Government drawings, specifications, or other data are used for any purpose other than in connection with a definitely related Government procurement operation, the United States Government thereby incurs no responsibility nor obligation whatsoever; and the fact that the Government may have formulated, furnished, or in any way supplied the said drawings, specifications or other data is not to be regarded by implication or otherwise as in any manner licensing the holder or any other person or corporation, or conveying any rights or permission to manufacture, use, or sell any patented invention that may in any way be related thereto.

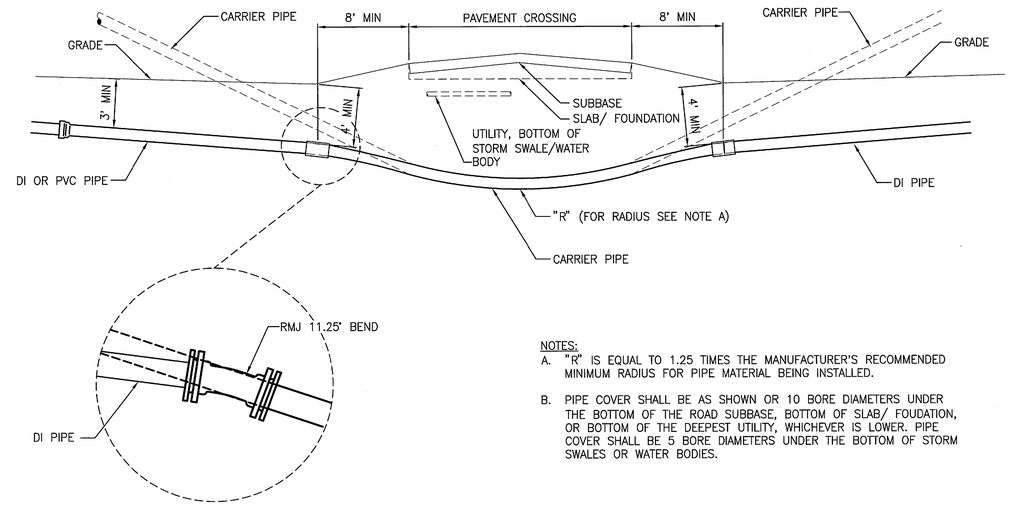

NOTES:
A. "R" IS EQUAL TO 1.25 TIMES THE MANUFACTURER'S RECOMMENDED MINIMUM RADIUS FOR PIPE MATERIAL BEING INSTALLED.
B. PIPE COVER SHALL BE AS SHOWN OR 10 BORE DIAMETERS UNDER THE BOTTOM OF THE ROAD SUBBASE, BOTTOM OF SLAB/ FOUDATION, OR BOTTOM OF THE DEEPEST UTILITY, WHICHEVER IS LOWER. PIPE COVER SHALL BE 5 BORE DIAMETERS UNDER THE BOTTOM OF STORM SWALES OR WATER BODIES.

CONNECTION DETAIL (TYP BOTH SIDES)

TYPICAL HORIZONTAL DIRECTIONAL DRILL DETAIL (1 / C21)
NTS

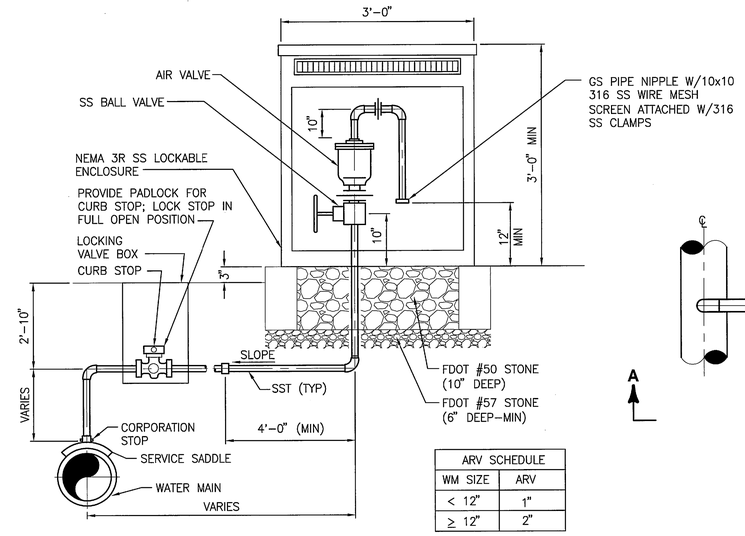

ARV SCHEDULE	
WM SIZE	ARV
< 12"	1"
≥ 12"	2"

SECTION A-A

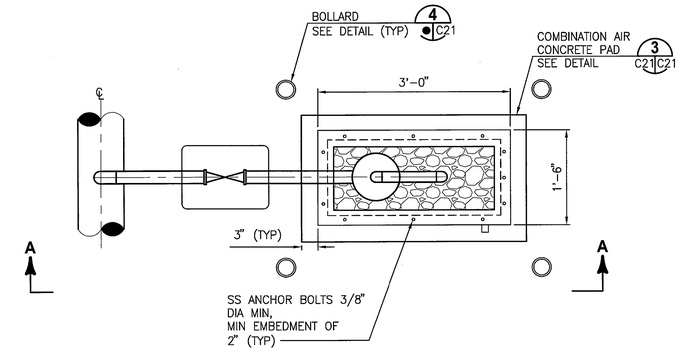

PLAN

NOTE:
A. ALL PIPING, FITTINGS, AND VALVES CONNECTING THE ARV TO THE WM SHALL BE THE SAME SIZE AS THE ARV INLET.

COMBINATION AIR VALVE DETAIL (2 / C21)
NTS

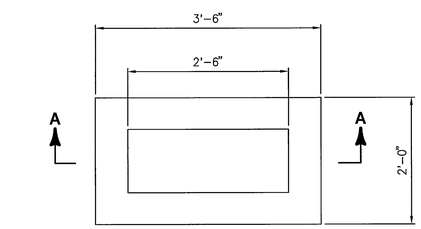

PLAN

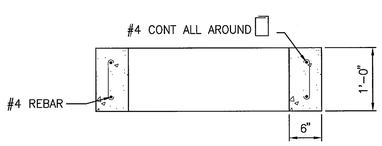

SECTION A-A

COMBINATION AIR AND VACUUM CONCRETE PAD DETAIL (3 / C21 C21)
NTS

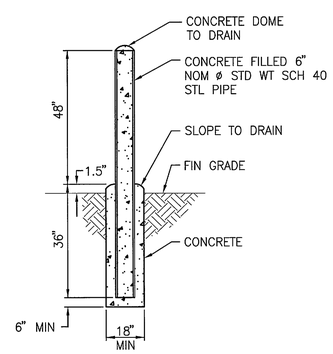

NOTES:
A. ACTUAL INSTALLATION LOCATION OF EACH BOLLARD SHALL BE AS SHOWN ON THE DRAWINGS OR AS DIRECTED IN THE FIELD.
B. PAINT ALL PIPING MATERIALS OSHA SAFETY YELLOW.

BOLLARD DETAIL (4 / C21)
NTS

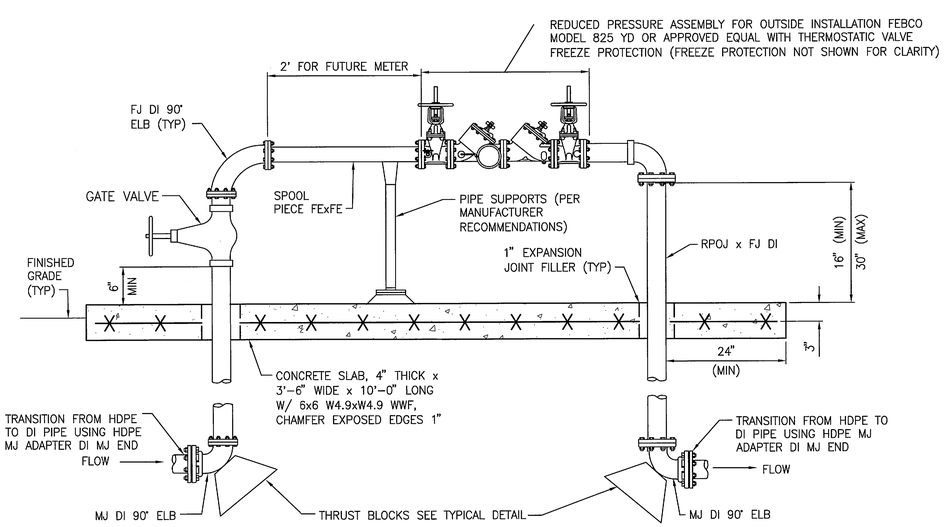

TYPICAL 4" REDUCED PRESSURE BACKFLOW PREVENTER DETAIL (5 / C8 C21)
NTS

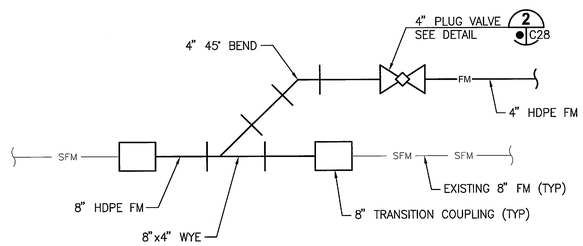

TYPICAL FORCE MAIN CONNECTION DETAIL (6 / C9 C21)
NTS

THIS SPACE RESERVED

SYM	ZONE	DESCRIPTION	DATE	APPROVED
A		GENERAL REVISIONS	12/05/11	

REVISIONS

THIS DRAWING CREATED IN AUTOCAD 2010 FILE FORMAT AND WILL BE REVISED ONLY ON AN AUTOCAD SYSTEM. FILE: 14000189-C21.DWG

JONES EDMUNDS
730 NE WALDO ROAD, GAINESVILLE, FLORIDA 32641 / (352) 377-5821
3910 S WASHINGTON AVE, SUITE 210, TITUSVILLE, FLORIDA 32780 / (321) 269-2950

SIGNATURES	DATE
DRAWN J. ALLEN	12/05/11
CHECKED M. CLARK	12/05/11
SUBMITTED R. BEST	12/05/11
ST of LICENSURE: FL LICENSE NO: 69875	
APPROVED M. CLARK	12/05/11
K. MILLER	12/5/11

NATIONAL AERONAUTICS AND SPACE ADMINISTRATION
JOHN F. KENNEDY SPACE CENTER, NASA
KENNEDY SPACE CENTER, FLORIDA

REVITALIZE WATER & WASTEWATER SYSTEMS - KARS PARK I

DETAILS

FILE NO.	SIZE	DWG. NO.	REV
	F	79K38879	A
PROJ. NO. 96968.3		SHEET 26	

C21

SC FORM 1-11 (3/76)(C/G 3/94)

NOTICE: When Government drawings, specifications, or other data are used for any purpose other than in connection with a definitely related Government procurement operation, the United States Government thereby incurs no responsibility nor obligation whatsoever; and the fact that the Government may have formulated, furnished, or in any way supplied the said drawings, specifications or other data is not to be regarded by implication or otherwise as in any manner licensing the holder or any other person or corporation, or conveying any rights or permission to manufacture, use, or sell any patented invention that may in any way be related thereto.

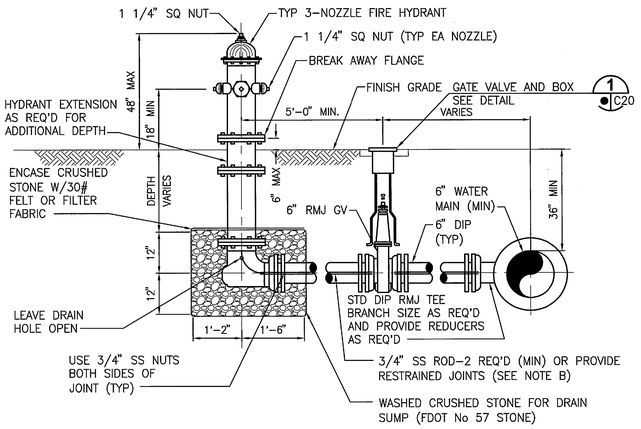

NOTES:

A. FIRE HYDRANT INSTALLATION SHALL BE IN ACCORDANCE WITH NASA-STD 8719.11A SECTION 5.3.2

B. 3/4" STAINLESS STEEL ROD CUT AND THREADED AS REQUIRED, OR PROVIDE RESTRAINED JOINTS.

C. FIRE HYDRANTS SHALL BE INSTALLED BETWEEN 3' AND 7' FROM EDGE OF PAVEMENT.

D. TIE RODS, NUTS, WASHERS AND OTHER FASTENERS SHALL BE GALVANIZED OR TYPE 316 STAINLESS STEEL.

E. 4 1/2" PUMPER NOZZLE TO BE PERPENDICULAR TO CENTERLINE OF MAJOR STREET.

F. FIRE HYDRANT ASSEMBLY INCLUDES ALL THAT IS SHOWN INCLUDING DI PIPE TO R/W, DIP TEE AT MAIN, HYDRANT, REDUCERS, VALVE, HYDRANT EXTENSIONS, VALVE EXTENSIONS, ALL PIPING AND MISCELLANEOUS APPURTENANCES REQUIRED FOR A COMPLETE INSTALLATION.

G. FOR FIRE HYDRANTS ALONG PAVED ROADWAYS, INSTALL RAISED PAVEMENT MARKER FOR FIRE HYDRANT IDENTIFICATION. MARKER SHALL BE BLUE AND IN ACCORDANCE WITH FDOT 706. MARKER SHALL BE LOCATED IN THE CENTER OF CLOSEST LANE PERPENDICULAR TO FIRE HYDRANT.

FIRE HYDRANT DETAIL 1 / C22
NTS

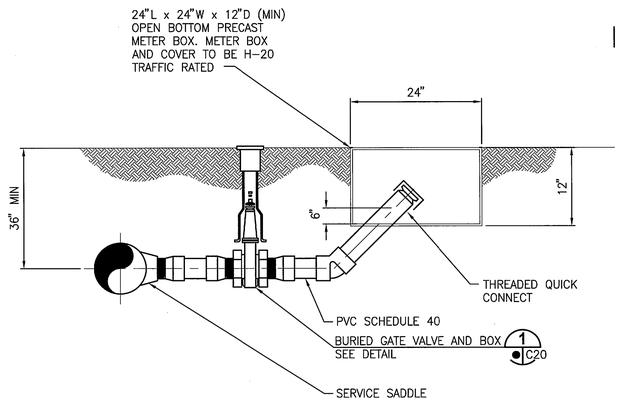

NOTES:
1. SIZE OF BLOW-OFF SHOWN ON PLAN SHEETS.
2. PROVIDE OWNER THE BLOW-OFF EXTENSION PIPE. (CONTRACTOR TO OBTAIN SIGNED RECEIPT FOR EXTENSION PIPE).

BLOW-OFF DETAIL 3 / C22
NTS

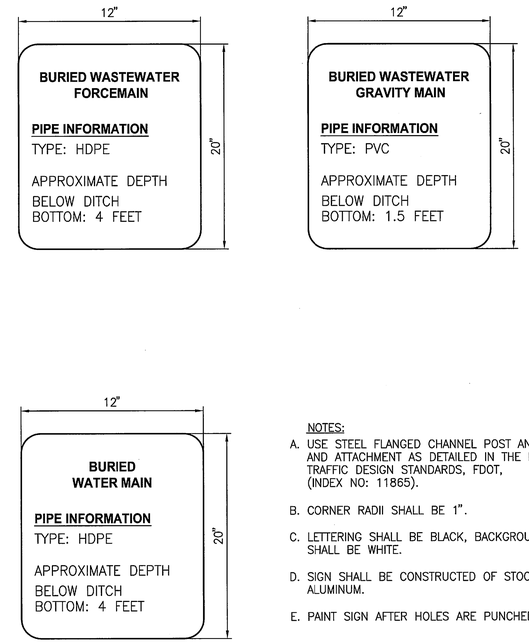

NOTES:

A. USE STEEL FLANGED CHANNEL POST AND SIGN AND ATTACHMENT AS DETAILED IN THE ROADWAY TRAFFIC DESIGN STANDARDS, FDOT, (INDEX NO: 11865).

B. CORNER RADII SHALL BE 1".

C. LETTERING SHALL BE BLACK, BACKGROUND SHALL BE WHITE.

D. SIGN SHALL BE CONSTRUCTED OF STOCK ALUMINUM.

E. PAINT SIGN AFTER HOLES ARE PUNCHED.

TYPICAL DITCH CROSSING SIGN DETAIL 5 / C22
NTS

NOTES:

A. 3/4" BRASS, ANGLE BODY, NON-THREADED HOSE BIBB. BODY SHALL BE SUITABLE FOR WRENCH GRIP. HOSE BIBB HANDLE SHALL BE SECURELY ATTACHED TO STEM.

B. 3/4" TYPE K COPPER RISER. COPPER RISER SHALL BE 95-5 SOLDER ABOVE GRADE AND SILVER SOLDER BELOW GRADE.

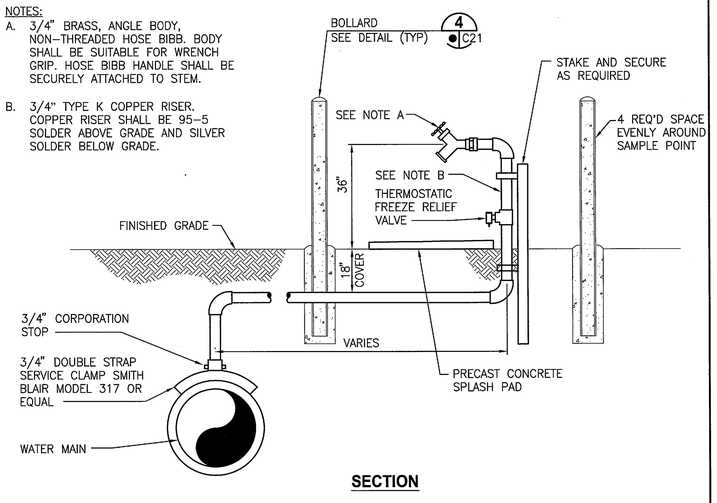

SECTION

TYPICAL BACTERIOLOGICAL SAMPLE POINT DETAIL 2 / C22
NTS

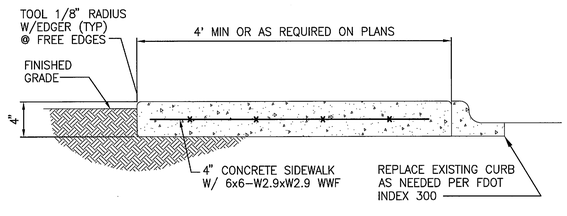

NOTES:

A. TOOL JOINTS SHALL BE LOCATED 5' APART ALONG THE LENGTH OF THE SIDEWALK.

B. CONTROL JOINTS SHALL BE LOCATED AT 10' SPACING ALONG THE LENGTH OF THE SIDEWALK. CONTROL JOINTS SHALL INCLUDE THE CONSTRUCTION OF 1/2" WIDE EXPANSION JOINT MATERIAL FOR THE DEPTH AND WIDTH OF THE SIDEWALK.

C. MATCH EXISTING SIDEWALK DEPTH, WIDTH, JOINT AND CONTROL JOINT LOCATIONS AS REQUIRED.

CONCRETE SIDEWALK RESTORATION DETAIL 4 / C22
NTS

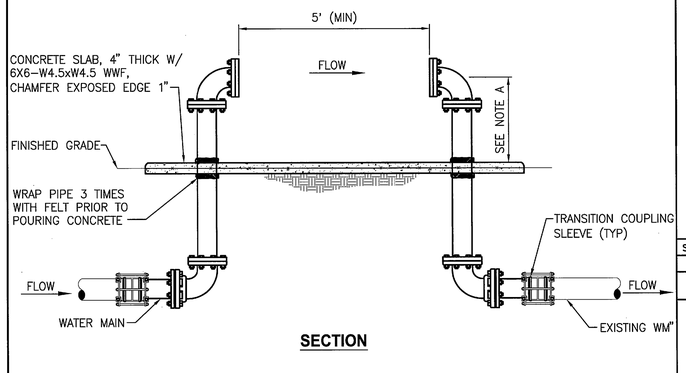

SECTION

NOTES:

A. HEIGHT OF BFP ASSEMBLY ABOVE CONC PAD SHALL THE MATCH HEIGHT PRIOR TO RELOCATION.

TYPICAL FUTURE BFP CONNECTION DETAIL 6 / C22
NTS

THIS SPACE RESERVED

SYM	ZONE	DESCRIPTION	DATE	APPROVED
A		GENERAL REVISIONS	12/05/11	

REVISIONS

THIS DRAWING CREATED IN AUTOCAD 2010 FILE FORMAT AND WILL BE REVISED ONLY ON AN AUTOCAD SYSTEM. FILE: 14000189-C22.DWG

JONES EDMUNDS
730 NE WALDO ROAD, GAINESVILLE, FLORIDA 32641 / (352) 377-5821
3910 S WASHINGTON AVE, SUITE 210, TITUSVILLE, FLORIDA 32780 / (321) 269-2950

SIGNATURES	DATE
DRAWN J. ALLEN	12/05/11
CHECKED M. CLARK	12/05/11
SUBMITTED R. BEST	12/05/11
ST of LICENSURE: FL LICENSE NO: 69875	
APPROVED M. CLARK	12/7/11
K. MILLER	12/9/11

NATIONAL AERONAUTICS AND SPACE ADMINISTRATION
JOHN F. KENNEDY SPACE CENTER, NASA
KENNEDY SPACE CENTER, FLORIDA

REVITALIZE WATER & WASTEWATER SYSTEMS - KARS PARK I

DETAILS

FILE NO.	SIZE	DWG. NO.	REV
	F	79K38879	A

PROJ. NO. 96968.3 | SHEET 27

C22

NOTICE: When Government drawings, specifications, or other data are used for any purpose other than in connection with a definitely related Government procurement operation, the United States Government thereby incurs no responsibility nor obligation whatsoever; and the fact that the Government may have formulated, furnished, or in any way supplied the said drawings, specifications or other data is not to be regarded by implication or otherwise as in any manner licensing the holder or any other person or corporation, or conveying any rights or permission to manufacture, use, or sell any patented invention that may in any way be related thereto.

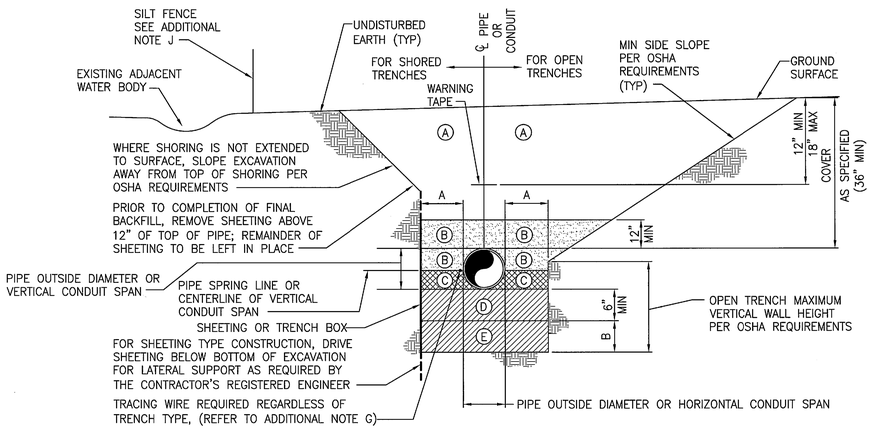

NOMINAL PIPE DIAMETER OR HORIZONTAL CONDUIT SPAN (INCHES)	MINIMUM SIDEWALL CLEARANCE	ADDITIONAL EXCAVATION DEPTH (1)
	A (INCHES)	B (INCHES)
LESS THAN 24	12	12
24 AND GREATER	18	18

(1) REQUIRED WHERE UNSUITABLE MATERIAL IS ENCOUNTERED.

ZONE NO.	ZONE NAME	MATERIAL	COMPACTION
A	FINAL BACKFILL	AS SPECIFIED	AT LEAST 95% MODIFIED PROCTOR MAXIMUM DRY DENSITY ASTM D-1557
B	INITIAL BACKFILL		
C	HAUNCHING		
D	BEDDING		
E	FOUNDATION		

TRENCH ZONE NOTES:

(A) FINAL BACKFILL SHALL BE INSTALLED IN LIFTS NOT EXCEEDING 6 INCHES, LOOSE MEASUREMENT. REFER TO ADDITIONAL NOTE H.

(B) INITIAL BACKFILL SHALL BE INSTALLED IN LIFTS NOT EXCEEDING 6 INCHES, LOOSE MEASUREMENT. ALL LIFTS SHALL BE COMPACTED BY HAND TAMPING OR AN APPROVED METHOD OF MECHANICAL TAMPING. REFER TO ADDITIONAL NOTE H.

(C) HAUNCHING SHALL BE IN COMPLETELY DEWATERED TRENCHES IN LIFTS NOT EXCEEDING 6 INCHES, LOOSE MEASUREMENT. ALL LIFTS SHALL BE COMPACTED BY HAND TAMPING. HAUNCHING SHALL BE BROUGHT UP EQUALLY ON BOTH SIDES OF THE PIPE.

(D) BEDDING SHALL BE INSTALLED IN COMPLETELY DEWATERED TRENCHES IN LIFTS NOT EXCEEDING 6 INCHES, LOOSE MEASUREMENT, AND SHALL BE COMPACTED BY HAND OR MECHANICAL TAMPING. PROPERLY SHAPED BELL HOLES SHALL BE EXCAVATED IN THE BEDDING TO PERMIT ASSEMBLY OF THE PIPE. REFER TO ADDITIONAL NOTE H.

NATIVE, UNDISTURBED MATERIAL IN COMPLETELY DEWATERED TRENCHES MEETING THE COMPACTION AND MATERIAL REQUIREMENTS FOR COMPACTED BEDDING MATERIAL NEED NOT BE REPLACED OR REWORKED, EXCEPT FOR SHAPING OF THE BELL HOLES, AND WHERE REFILL IS REQUIRED.

(E) FOUNDATION SHALL BE REQUIRED WHERE UNSUITABLE MATERIAL IS ENCOUNTERED. FOUNDATION SHALL BE IN ACCORDANCE WITH THE REQUIREMENTS FOR BEDDING. REFER TO ADDITIONAL NOTE H.

ADDITIONAL NOTES:

F. FOR TRENCHES IN VEHICULAR TRAFFIC AREAS OR BENEATH SURFACE IMPROVEMENTS (EG, SLAB, ETC.) SEE CONTRACT SPECIFICATIONS FOR ADDITIONAL COMPACTION REQUIREMENTS.

G. TRACING WIRE SHALL BE INSTALLED ON THE SIDE OF THE PIPE AND ATTACHED TO THE PIPE EVERY 10' W/ A NYLON WIRE TIE. IF THE WIRE IS DAMAGED OR NEEDS TO BE EXTENDED A 3M WATERPROOF TYPE UF SPLICE, OR APPROVED EQUAL, SHALL BE INSTALLED TO REPAIR THE WIRE. THE ENDS OF THE TRACING WIRE SHALL BE BROUGHT UP IN EVERY VALVE BOX ON THE LINE AND AT THE HYDRANT VALVES. THERE SHALL BE A MINIMUM COIL OF 3' LEFT UNDER THE VALVE BOX COVER. THE WIRE SHALL BE TESTED TO VERIFY CONDUCTIVITY.

H. ALTERNATIVE LIFT THICKNESSES, NOT EXCEEDING 12 INCHES LOOSE MEASUREMENT, ARE ACCEPTABLE IN TRENCH ZONES 1, 2, 4, AND 5 PROVIDED 1) THE LIFT THICKNESS DOES NOT EXCEED THE MAXIMUM VALUE RECOMMENDED IN WRITING BY THE APPLICABLE PIPE MANUFACTURER AND 2) FIELD TEST RESULTS CONFIRM THAT THE SPECIFIED COMPACTION REQUIREMENTS ARE BEING MET.

J. CONSTRUCT STORMWATER POLLUTION PREVENTION ITEMS ADJACENT TO ALL SOIL DISTURBANCES ACCORDING TO DETAILS ON C25. PLACE ON DOWN SLOPE TO INTERCEPT SEDIMENT AND PROTECT NEARBY WATER BODIES AND UNDISTURBED AREAS. MAINTAIN STORMWATER POLLUTION PREVENTION ITEMS IN GOOD WORKING ORDER UNTIL ADEQUATE COVER MATERIALS ARE ESTABLISHED. IF A REPAIR IS NECESSARY, IT WILL BE INITIATED WITHIN 24 HOURS OF REPORT. BUILT UP SEDIMENT WILL BE REMOVED FROM STAKED SILT FENCE AND STAKED TURBIDITY BARRIERS WHEN IT HAS REACHED ONE-HALF THE HEIGHT OF THE SILT FENCE OR BARRIER.

TYPICAL UTILITY TRENCH DETAIL (1 / C23)

NTS

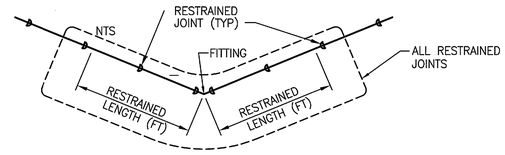

RESTRAINED JOINT SCHEDULE									
PIPE SIZE	FITTING								
	90° BEND	45° BEND	45° BEND (VERT)	22 1/2° BEND	22 1/2° BEND (VERT)	11 1/4° BEND	11 1/4° BEND (VERT)	VALVE, DEAD END OR REDUCER	TEE (BRANCH)
8"	37	16	45	8	14	4	7	107	107
6"	29	12	34	6	11	3	6	82	82
4"	17	8	16	4	8	2	4	38	37

NOTES:

A. RESTRAINED LENGTHS ARE IN FEET AND ARE FOR POLYETHYLENE WRAPPED DUCTILE IRON PIPE UNLESS OTHERWISE NOTED.

B. SEE SPECIFICATIONS FOR ADDITIONAL INFORMATION REGARDING RESTRAINED JOINTS.

C. THE SCHEDULE SHOWN IS FOR THE FOLLOWING SERVICE CONDITIONS 150 PSIG TEST PRESSURE; POORLY GRADED COARSE SAND; 36 INCHES COVER, TYPE 3 TRENCH CONDITIONS; AND 1.5 SAFETY FACTOR.

D. RESTRAINED LENGTHS SHOWN IN TABLE ARE IN FEET AND ARE MINIMUM LENGTHS REQUIRED IN EACH DIRECTION FROM FITTINGS OR VALVES.

E. ALL PIPE SHALL BE RESTRAINED TO THE NEXT JOINT BEYOND THE RESTRAINED LENGTH GIVEN.

F. RESTRAINED LENGTH FOR REDUCERS SHALL BE BASED ON THE SIZE OF THE LARGEST END OF THE REDUCER.

G. CONTRACTOR SHALL HAVE FLORIDA LICENSED PROFESSIONAL ENGINEER VERIFY ALL THE RESTRAINED LENGTHS SHOWN IN THE TABLE ABOVE ARE ADEQUATE FOR ALL VARYING SOIL CONDITIONS ON THE PROJECT. THE CONTRACTOR'S ENGINEER SHALL PROVIDE A SIGNED AND SEALED STATEMENT THAT ALL PIPING WAS INSTALLED IN ACCORDANCE WITH THE REQUIREMENTS OF THE TABLE ABOVE OR IN ACCORDANCE WITH THE FINDINGS OF THE CONTRACTOR'S PROFESSIONAL ENGINEER, WHICHEVER ARE MORE STRINGENT. CONTRACTOR'S COST FOR MEETING THESE REQUIREMENTS SHALL BE INCLUDED IN THEIR BID.

H. FOR CONNECTION OF PIPING TO EXISTING PIPING, WHEN THE REQUIRED RESTRAINED JOINT PIPE LENGTHS TO PREVENT PIPE MOVEMENT CANNOT BE ATTAINED IN ACCORDANCE WITH RESTRAINED JOINT SCHEDULE, THE APPROPRIATE TEE, VALVES, BEND AND/OR CROSS FITTING(S) SHALL BE FULLY RESTRAINED IN ACCORDANCE WITH THRUST BLOCK DETAIL (3 / C23) TO PREVENT PIPE MOVEMENT.

J. WHERE HDD CONNECT TO PUSH-ON JOINT PIPING, THIS CONNECTION SHALL BE TREATED AS DEAD END W/ RESPECT TO THE RESTRAINED JOINT SCHEDULE.

RESTRAINED JOINT SCHEDULE (2 / C23)

NTS

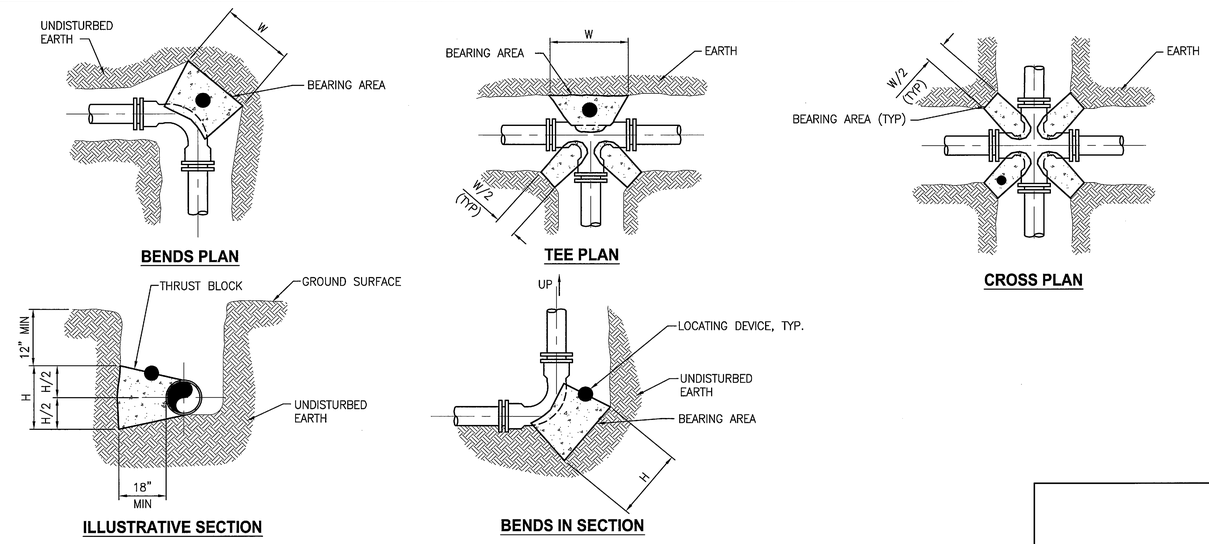

REACTION BLOCK BEARING AREA DIMENSIONS					
FITTING	11 1/4° BEND	22 1/2° BEND	45° BEND	90° BEND	TEE/CROSS/ PLUGS/CAPS
SIZE (in)	H x W (in)	H x W (in)	H x W (in)	H x W (in)	H x W (in)
4	11x11	15x15	20x20	28x28	23x23
6	15x15	21x21	29x29	40x40	33x33
8	20x20	27x27	38x38	52x52	44x44
10	24x24	33x33	47x47	63x63	53x53
12	28x28	40x40	55x55	75x75	63x63
14	33x33	46x46	64x64	87x87	73x73
16	37x37	52x52	73x73	99x99	83x83
18	42x42	58x58	82x82	111x111	93x93
24	55x55	77x77	108x108	146x146	123x123

B

REACTION BLOCK NOTES

A. BASED ON 150 PSI PRESSURE & 1500 PSF SOIL BEARING VALUE, 2.0 SAFETY FACTOR, WATER TABLE BELOW THE THRUST BLOCK, VERTICAL BLOCK FACE, AND A MINIMUM THICKNESS OF 18 INCHES. B

B. BEARING AREAS FOR PLUGS SHALL BE THE SAME AS FOR TEES.

C. FORM REACTION BLOCKS TO KEEP CONCRETE CLEAR OF JOINTS AND BOLTS.

D. REQUIRED REACTION BLOCK BEARING AREA SHALL BE PLACED AGAINST UNDISTURBED MATERIAL. WHERE TRENCH WALL HAS BEEN DISTURBED, EXCAVATE ALL LOOSE MATERIAL AND EXTEND REACTION BLOCK TO UNDISTURBED MATERIAL.

E. PLACE PRESSURE TREATED WOOD BOARDS IN FRONT OF PLUG, AT TEE, CROSS OR END OF PIPE BEFORE POURING CONCRETE REACTION BLOCK.

F. BACKFILL SHALL CONSIST ENTIRELY OF CLEAN SAND AND ROCK FRAGMENTS. ANY MUCK ENCOUNTERED SHALL BE REPLACED WITH BACKFILL COMPACTED TO 95% MODIFIED PROCTOR MAXIMUM DRY DENSITY, ASTM D1557.

G. CONTRACTOR TO OBTAIN LOCATING DEVICES AND TO EMBED THE DEVICE INTO THE TOP SURFACE ON THE THRUST BLOCK SUCH THAT HALF THE DEVICE IS EXPOSED AND THE LOCATION IS AT THE CENTROID OF THE THRUST BLOCK TOP SURFACE AREA. THE LOCATING DEVICES SHALL BE OMNI MARKER MODEL 161 WATER MARKER OR APPROVED EQUAL.

TYPICAL REACTION BLOCK (THRUST BLOCK) DETAILS (3 / C23)

NTS

THIS SPACE RESERVED

SYM	ZONE	DESCRIPTION	DATE	APPROVED
B		REVISE DETAIL 3	03/07/12	
A		GENERAL REVISIONS	12/05/11	

REVISIONS

THIS DRAWING CREATED IN AUTOCAD 2010 FILE FORMAT AND WILL BE REVISED ONLY ON AN AUTOCAD SYSTEM. FILE: 14000189-C23.DWG

JONES EDMUNDS
730 NE WALDO ROAD, GAINESVILLE, FLORIDA 32641 / (352) 377-5821
3910 S WASHINGTON AVE, SUITE 210, TITUSVILLE, FLORIDA 32780 / (321) 269-2950

SIGNATURES	DATE
DRAWN J. ALLEN	12/05/11
CHECKED M. CLARK	12/05/11
SUBMITTED R. BEST	12/05/11
ST of LICENSURE: FL LICENSE NO: 69875	
M. CLARK	
K. MILLER	

NATIONAL AERONAUTICS AND SPACE ADMINISTRATION
JOHN F. KENNEDY SPACE CENTER, NASA
KENNEDY SPACE CENTER, FLORIDA

REVITALIZE WATER & WASTEWATER SYSTEMS - KARS PARK I

DETAILS

FILE NO.	SIZE	DWG. NO.	REV
	F	79K38879	B

PROJ. NO. 96968.3 | SHEET 28

C23

NOTICE: When Government drawings, specifications, or other data are used for any purpose other than in connection with a definitely related Government procurement operation, the United States Government thereby incurs no responsibility nor obligation whatsoever; and the fact that the Government may have formulated, furnished, or in any way supplied the said drawings, specifications or other data is not to be regarded by implication or otherwise as in any manner licensing the holder or any other person or corporation, or conveying any rights or permission to manufacture, use, or sell any patented invention that may in any way be related thereto.

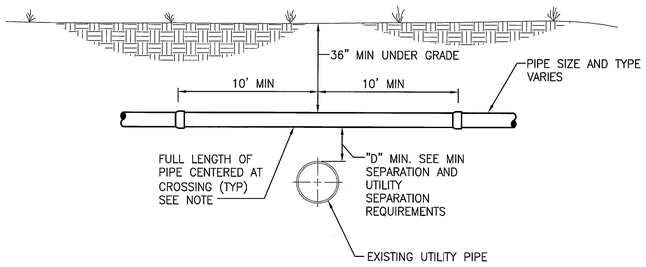

CROSSING OVER UTILITIES

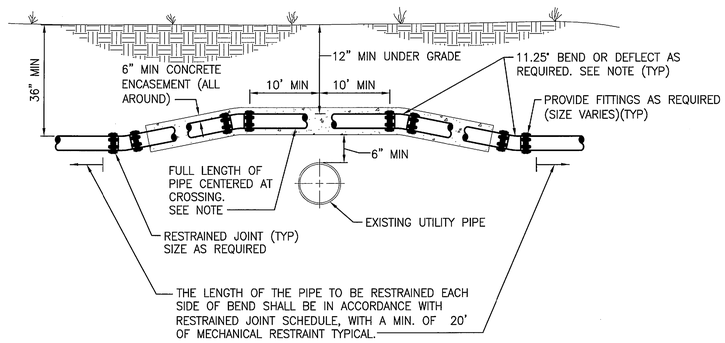

NOTE: ENCASEMENT IS REQUIRED IF DEPTH FROM GRADE TO TOP OF PIPE IS LESS THAN 24 INCHES.

CROSSING OVER UTILITIES (ENCASED)

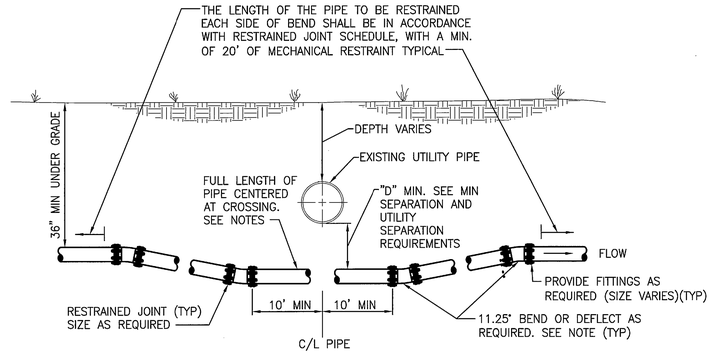

CROSSING UNDER UTILITIES

UTILITY SEPARATION REQUIREMENTS

A. IT IS REQUIRED THAT "WATER MAINS" BE INSTALLED, CLEANED, DISINFECTED AND HAVE A SATISFACTORY BACTERIOLOGICAL SURVEY PERFORMED IN ACCORDANCE WITH THE LATEST APPLICABLE AWWA STANDARDS AND CHAPTER 62–555, F.A.C. STANDARDS. FOR THE PURPOSE OF THIS SECTION, THE PHRASE "WATER MAINS" SHALL MEAN MAINS, INCLUDING TREATMENT PLANT PROCESS PIPING, CONVEYING EITHER RAW, PARTIALLY TREATED, OR FINISHED DRINKING WATER; FIRE HYDRANT LEADS; AND SERVICE LINES THAT HAVE AN INSIDE DIAMETER OF THREE (3) INCHES OR GREATER. IN ADDITION, THE PHRASE "REGULATED PUBLIC ACCESS RECLAIMED WATER" REFERS TO THE WATER REGULATED UNDER PART III OF CHAPTER 62.210, F.A.C.

B. NEW, RELOCATED OR EXISTING UNDERGROUND WATER MAINS SHALL BE LAID TO PROVIDE A HORIZONTAL DISTANCE OF AT LEAST THREE (3) FEET BETWEEN THE OUTSIDE OF THE WATER MAIN AND THE OUTSIDE OF ANY EXISTING OR PROPOSED STORM SEWER, STORMWATER FORCE MAIN, OR PIPELINE CONVEYING REGULATED PUBLIC ACCESS RECLAIMED WATER.

C. NEW OR RELOCATED, UNDERGROUND SEWER/WATER MAINS SHALL BE LOCATED TO PROVIDE A HORIZONTAL DISTANCE OF AT LEAST SIX (6) FEET, AND PREFERABLY TEN (10) FEET, BETWEEN THE OUTSIDE OF THE SEWER/WATER MAIN AND THE OUTSIDE OF ANY EXISTING OR PROPOSED WATER/GRAVITY OR PRESSURE–TYPE SANITARY SEWER, NON–REGULATED RECLAIMED WATER, OR WASTEWATER FORCE MAIN. THE MINIMUM HORIZONTAL SEPARATION DISTANCE BETWEEN WATER MAINS AND GRAVITY–TYPE SANITARY SEWERS MAY BE REDUCED TO THREE (3) FEET WHERE THE BOTTOM OF THE WATER MAIN IS LOCATED AT LEAST SIX (6) INCHES ABOVE THE TOP OF THE SEWER (SPECIAL CASE).

D. NEW, RELOCATED OR EXISTING UNDERGROUND WATER MAINS CROSSING ANY EXISTING OR PROPOSED GRAVITY OR VACUUM–TYPE SANITARY SEWER, OR STORM SEWER SHALL BE LOCATED SO THE OUTSIDE OF THE WATER MAIN IS AT LEAST SIX (6) INCHES, AND PREFERABLE TWELVE (12) INCHES, ABOVE OR AT LEAST TWELVE (12) INCHES BELOW THE OUTSIDE OF THE OTHER PIPELINE. HOWEVER, IT IS PREFERABLE TO LAY THE WATER MAIN ABOVE THE OTHER PIPELINE.

E. NEW, RELOCATED OR EXISTING UNDERGROUND WATER MAINS CROSSING ANY EXISTING OR PROPOSED PRESSURE–TYPE SANITARY SEWER, WASTEWATER OR STORMWATER FORCE MAIN, OR PIPELINE CONVEYING RECLAIMED WATER SHALL BE LOCATED SO THE OUTSIDE OF THE WATER MAIN IS A LEAST TWELVE (12) INCHES ABOVE OR BELOW THE OUTSIDE OF THE OTHER PIPELINE. HOWEVER, IT IS PREFERABLE TO LAY THE WATER MAIN ABOVE THE OTHER PIPELINE.

F. AT THE UTILITY CROSSINGS DESCRIBED IN NOTES D AND E ABOVE, ONE FULL LENGTH OF WATER MAIN PIPE SHALL BE CENTERED ABOVE OR BELOW THE OTHER PIPELINE SO THE WATER MAIN JOINTS WILL BE AS FAR AS POSSIBLE FROM THE OTHER PIPELINE. ALTERNATIVELY, AT SUCH CROSSINGS, THE PIPES SHALL BE ARRANGED SO THAT ALL WATER MAIN JOINTS ARE AT LEAST THREE (3) FEET FROM ALL JOINTS IN VACUUM–TYPE SANITARY SEWERS, STORM SEWERS, STORMWATER FORCE MAINS, OR PIPELINES CONVEYING REGULATED PUBLIC ACCESS RECLAIMED WATER, AND AT LEAST SIX (6) FEET FROM ALL JOINTS IN GRAVITY OR PRESSURE–TYPE SANITARY SEWERS, NON–REGULATED RECLAIMED WATER, OR WASTEWATER FORCE MAINS.

G. NEW, RELOCATED OR EXISTING FIRE HYDRANTS SHALL BE LOCATED SO THAT THE HYDRANTS ARE AT LEAST THREE (3) FEET FROM ANY EXISTING OR PROPOSED STORM SEWER, STORMWATER FORCE MAIN, OR PIPELINE CONVEYING REGULATED PUBLIC ACCESS RECLAIMED WATER; AT LEAST THREE (3) FEET, AND PREFERABLY TEN (10) FEET, FROM ANY EXISTING OR PROPOSED VACUUM–TYPE SANITARY SEWER; AT LEAST SIX (6) FEET, AND PREFERABLY TEN (10) FEET, FROM ANY EXISTING OR PROPOSED GRAVITY OR PRESSURE–TYPE SANITARY SEWER OR WASTEWATER FORCE MAIN.

H. IF THE CONTRACTOR CAN NOT MEET THE MINIMUM SEPARATION REQUIREMENTS HE/SHE MUST NOTIFY THE CONTRACTING OFFICER. THE CONTRACTING OFFICER IS REQUIRED TO DISCUSS MITIGATION WITH FDEP AND OBTAIN FDEP APPROVAL PRIOR TO INSTALLING ANY UTILITIES NOT IN COMPLIANCE WITH FDEP MINIMUM SEPARATION REQUIREMENTS.

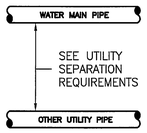

PLAN VIEW

OTHER PIPING TYPE	MINIMUM HORIZONTAL SEPARATION (FEET) SEE NOTE C
1. GRAVITY SANITARY SEWER	6
2. GRAVITY SANITARY SEWER (SPECIAL CASE, NOTE #3)	3
3. SEWAGE FORCE MAIN	6
4. GRAVITY STORM SEWER	3
5. RECLAIMED WATER (PUBLIC ACCESS)	3
6. ELECTRIC	3
7. OTHER	6 B

MINIMUM HORIZONTAL SEPARATION REQUIREMENTS

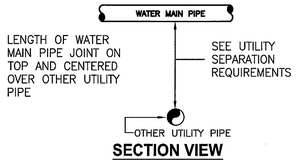

SECTION VIEW

OTHER PIPING TYPE	"D" – MINIMUM VERTICAL SEPARATION (INCHES) SEE NOTE D
1. GRAVITY SANITARY SEWER	6
2. SEWAGE FORCE MAIN	12
3. GRAVITY STORM SEWER	6
4. RECLAIMED WATER	12
5. ELECTRIC	6
6. OTHER	12 B

NOTE:

J. IF THE WATER MAIN IS BELOW THE SEWER PIPE, THEN A MINIMUM OF 12" VERTICAL SEPARATION IS REQUIRED.

K. THE CONTRACTOR MAY CHOOSE TO DEFLECT THE PROPOSED PIPE UNDER OR OVER THE EXISTING UTILITY PIPE IN LIEU OF USING FITTINGS AS LONG AS THE MINIMUM DISTANCE "D" IS MAINTAINED AND THE AMOUNT OF PIPE DEFLECTION MEETS THE REQUIREMENTS OF THE SPECIFICATIONS.

MINIMUM VERTICAL SEPARATION REQUIREMENTS

TYPICAL UTILITY CONFLICT DETAIL 1 / C24

NTS

THIS SPACE RESERVED

SYM	ZONE	DESCRIPTION	DATE	APPROVED
B		REVISE DETAIL 1	03/07/12	MC
A		GENERAL REVISIONS	10/31/11	

REVISIONS

THIS DRAWING CREATED IN AUTOCAD 2010 FILE FORMAT AND WILL BE REVISED ONLY ON AN AUTOCAD SYSTEM. FILE: 14000189–C24.DWG

JONES EDMUNDS

730 NE WALDO ROAD, GAINESVILLE, FLORIDA 32641 / (352) 377-5821
3910 S WASHINGTON AVE, SUITE 210, TITUSVILLE, FLORIDA 32780 / (321) 269-2950

SIGNATURES	DATE
DRAWN J. ALLEN	12/05/11
CHECKED M. CLARK	12/05/11
SUBMITTED R. BEST	12/05/11
ST of LICENSURE: FL LICENSE NO: 69875	
M. CLARK	
K. MILLER	

NATIONAL AERONAUTICS AND SPACE ADMINISTRATION
JOHN F. KENNEDY SPACE CENTER, NASA
KENNEDY SPACE CENTER, FLORIDA

REVITALIZE WATER & WASTEWATER SYSTEMS - KARS PARK I

DETAILS

FILE NO.	SIZE	DWG. NO.	REV
	F	79K38879	B

PROJ. NO. 96968.3 | SHEET 29

C24

NOTICE: When Government drawings, specifications, or other data are used for any purpose other than in connection with a definitely related Government procurement operation, the United States Government thereby incurs no responsibility nor obligation whatsoever; and the fact that the Government may have formulated, furnished, or in any way supplied the said drawings, specifications or other data is not to be regarded by implication or otherwise as in any manner licensing the holder or any other person or corporation, or conveying any rights or permission to manufacture, use, or sell any patented invention that may in any way be related thereto.

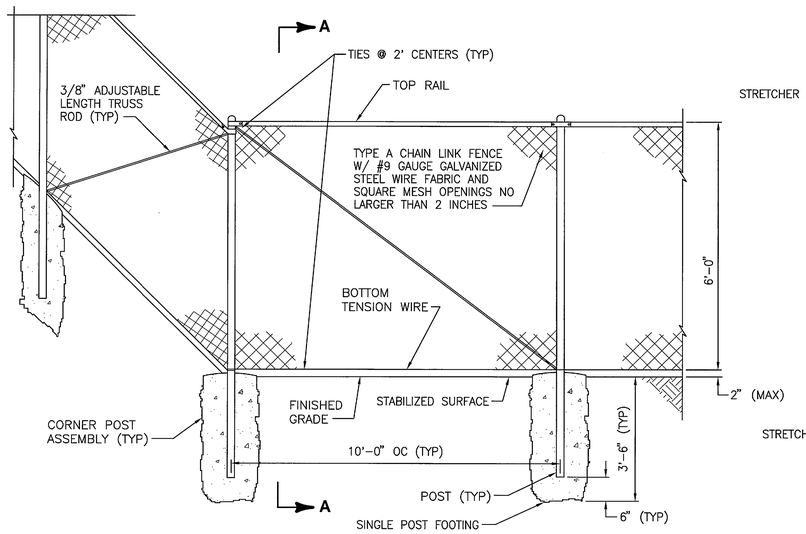

FENCE DETAIL

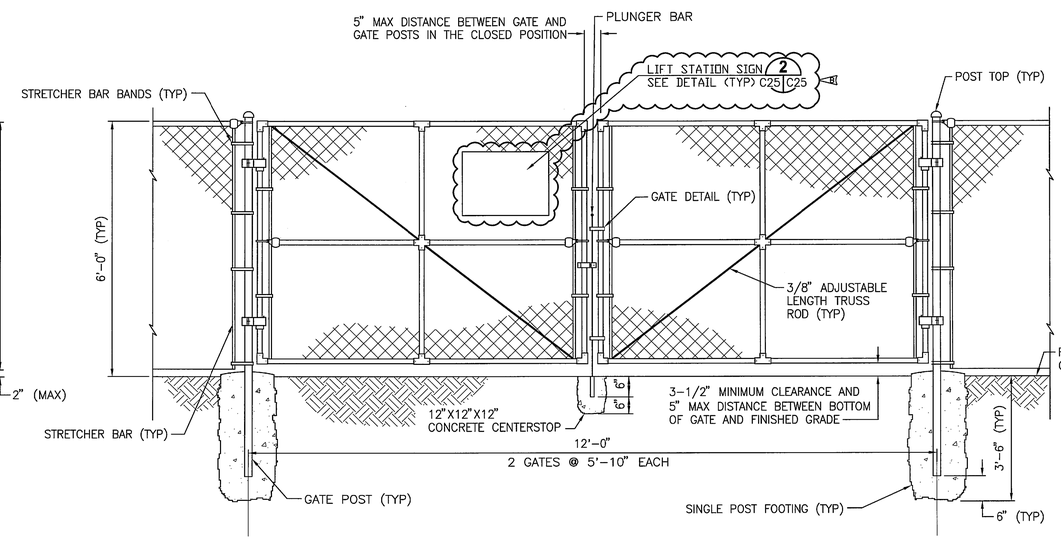

DOUBLE SWING GATE DETAIL

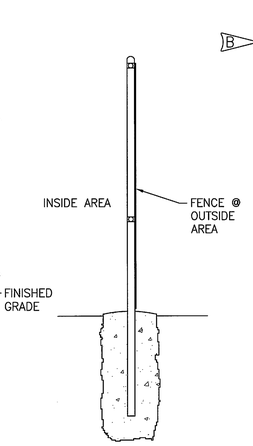

SECTION A-A

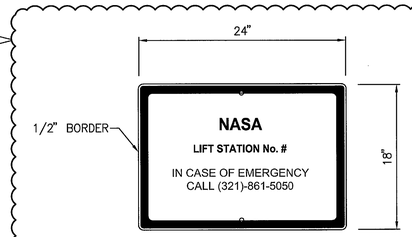

NOTES:

A. BACKGROUND SHALL BE 3M ENGINEER GRADE PRISMATIC, WHITE WITH GREEN BORDER.

B. SIGN LETTERS SHALL BE VINYL AND GREEN IN COLOR.

C. MOUNT TO FENCE WITH STAINLESS STEEL CHAINLINK BRACKET.

D. SIGN BLANK SHALL BE REFLECTIVE ALUMINUM WITH A THICKNESS OF 0.080 INCHES.

E. CORNERS SHALL BE STANDARD RADIUS.

F. ONE SIGN WILL READ "LIFT STATION NO. 2" AND ONE SIGN WILL READ "LIFT STATION NO. 3"

LIFT STATION SIGN DETAIL 2 C25 C25
NTS

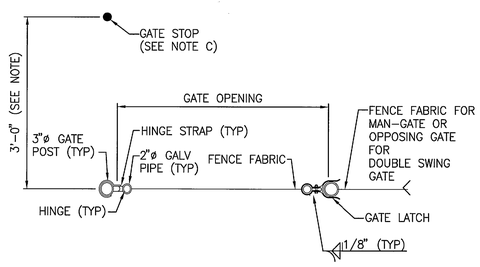

NOTES:

A. ALL GATES SHALL BE PROVIDED WITH A PAD-LOCKABLE MECHANISM.

B. "L" = GATE WIDTH.

C. GATE STOP SHALL BE 1" DIAMETER GALVANIZED STEEL DRIVEN 3' INTO THE GROUND AND PROTRUDING 8" ABOVE FINISHED GRADE (TYP OF EACH GATE).

GATE DETAIL

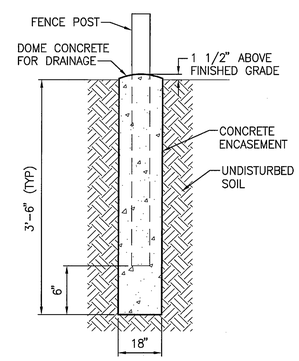

SINGLE POST FOOTING DETAIL

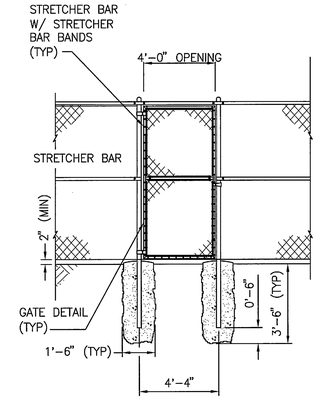

MAN-GATE DETAIL

FENCE AND GATE DETAILS 1 C25
NTS

THIS SPACE RESERVED

SYM	ZONE	DESCRIPTION	DATE	APPROVED
B		REVISE DETAIL 1, ADD DETAIL 2	03/07/12	
A		GENERAL REVISIONS	10/31/11	

REVISIONS

THIS DRAWING CREATED IN AUTOCAD 2010 FILE FORMAT AND WILL BE REVISED ONLY ON AN AUTOCAD SYSTEM. FILE: 14000189-C25.DWG

JONES EDMUNDS
730 NE WALDO ROAD, GAINESVILLE, FLORIDA 32641 / (352) 377-5821
3910 S WASHINGTON AVE, SUITE 210, TITUSVILLE, FLORIDA 32780 / (321) 269-2950

SIGNATURES	DATE
DRAWN J. ALLEN	12/05/11
CHECKED M. CLARK	12/05/11
SUBMITTED R. BEST	12/05/11
ST of LICENSURE: FL LICENSE NO: 69875	
APPROVED M. CLARK	
K. MILLER	

NATIONAL AERONAUTICS AND SPACE ADMINISTRATION
JOHN F. KENNEDY SPACE CENTER, NASA
KENNEDY SPACE CENTER, FLORIDA

REVITALIZE WATER & WASTEWATER SYSTEMS - KARS PARK I

DETAILS

FILE NO.	SIZE	DWG. NO.	REV
	F	79K38879	B

PROJ. NO. 96968.3 SHEET 30

C25

NOTICE: When Government drawings, specifications, or other data are used for any purpose other than in connection with a definitely related Government procurement operation, the United States Government thereby incurs no responsibility nor obligation whatsoever; and the fact that the Government may have formulated, furnished, or in any way supplied the said drawings, specifications or other data is not to be regarded by implication or otherwise as in any manner licensing the holder or any other person or corporation, or conveying any rights or permission to manufacture, use, or sell any patented invention that may in any way be related thereto.

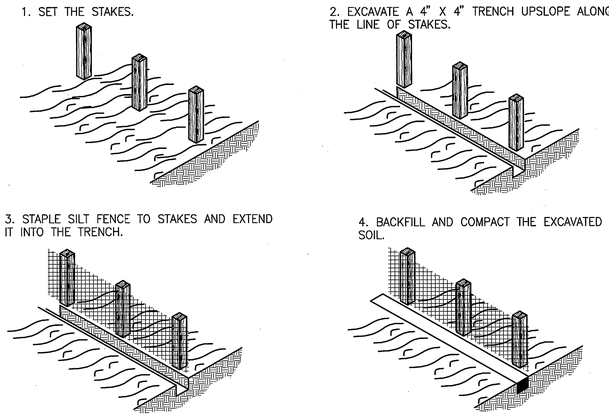

CONSTRUCTION OF A SILT FENCE DETAIL (1)
NTS • C26

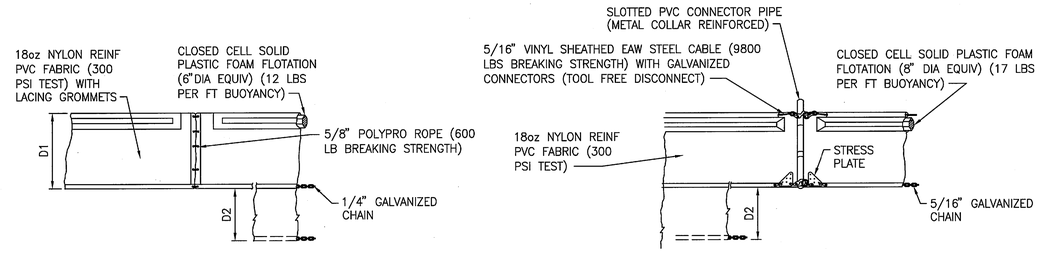

D1 =5' STD (SINGLE PANEL FOR DEPTHS 5' OR LESS)

D2 =5' STD (ADDITIONAL PANEL FOR DEPTHS 5')

CURTAIN TO REACH BOTTOM UP TO DEPTHS OF 10 FEET. TWO (2) PANELS TO BE USED FOR DEPTHS GREATER THAN 10 FEET UNLESS SPECIAL DEPTH CURTAINS SPECIFICALLY CALL FOR IN THE PLANS OR AS DETERMINED BY THE ENGINEER.

NOTICE: COMPONENTS OF TYPES 1 AND 2 MAY BE SIMILAR OR IDENTICAL TO PROPRIETARY DESIGNS. ANY INFRINGEMENT ON THE PROPRIETARY RIGHTS OF THE DESIGNER SHALL BE THE SOLE RESPONSIBILITY OF THE USER. SUBSTITUTIONS FOR TYPES 1 AND 2 SHALL BE AS APPROVED BY THE ENGINEER.

TYPICAL FLOATING TURBIDITY BARRIER DETAIL (2)
NTS • C26

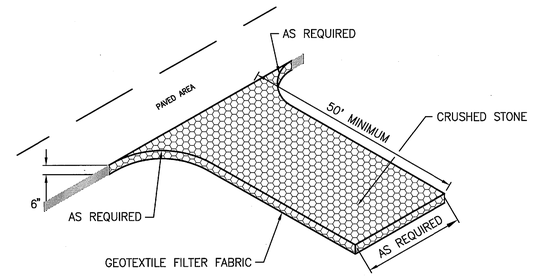

STABILIZED CONSTRUCTION ENTRANCE/EXIT DETAIL (3)
NTS • C26

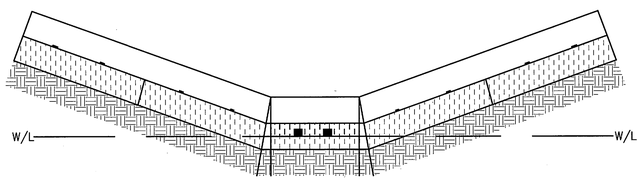

PROPER PLACEMENT OF A STRAW BALE IN A DRAINAGE WAY DETAIL (4)
NTS • C26

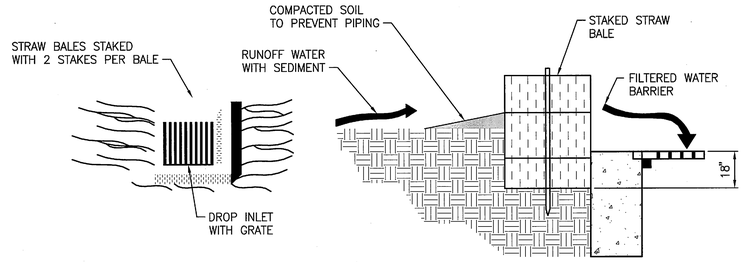

SPECIFIC APPLICATION
THIS METHOD OF INLET PROTECTION IS APPLICABLE WHERE THE INLET DRAINS A RELATIVELY FLAT AREA (SLOPES NO GREATER THAN 5%) WHERE SHEET OR OVERLAND FLOWS (NOT EXCEEDING 5.3 CFS) ARE TYPICAL. THE METHOD SHALL NOT APPLY TO INLETS RECEIVING CONCENTRATED FLOWS, SUCH AS IN STREET OR HIGHWAY MEDIANS.

STRAW BALE DROP INLET SEDIMENT FILTER DETAIL (5)
NTS • C26

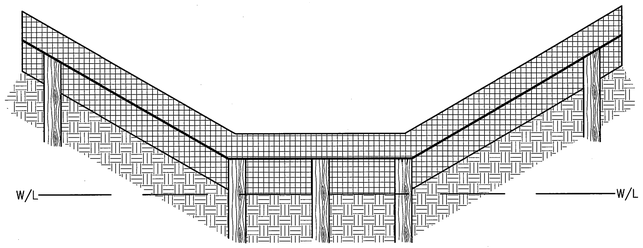

PROPER PLACEMENT OF A SILT FENCE IN A DRAINAGE WAY DETAIL (6)
NTS • C26

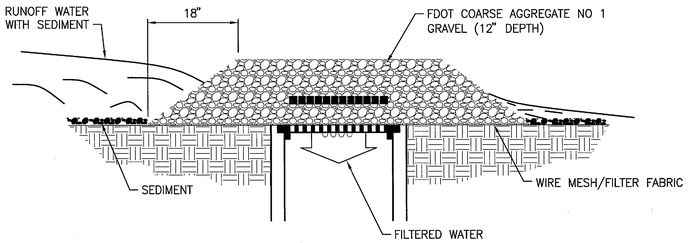

GRAVEL AND WIRE MESH DROP INLET SEDIMENT FILTER DETAIL (7)
NTS • C26

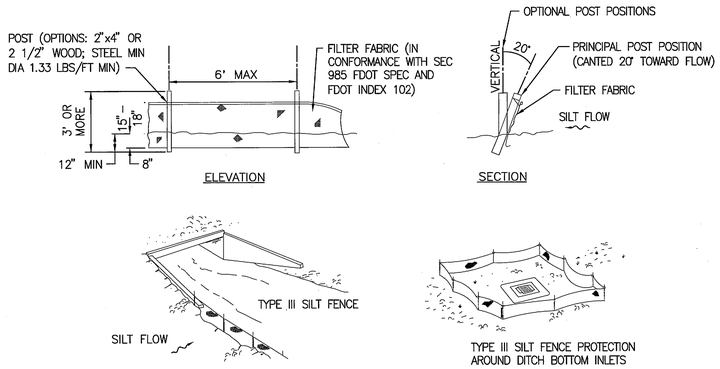

TYPE III SILT FENCE

NOTES:
A. DO NOT DEPLOY IN A MANNER THAT SILT FENCES WILL ACT AS A DAM ACROSS PERMANENT FLOWING WATERCOURSES. SILT FENCES ARE TO BE USED AT UPLAND LOCATIONS AND TURBIDITY BARRIERS USED AT PERMANENT BODIES OF WATER.

B. WHEN JOINING BUTT ENDS OF SILT FENCE FABRIC; JOIN FABRIC ENDS, WRAP AROUND A POST 360-DEGREES, AND SET POST.

FDOT INDEX NUMBER 102 SILT FENCE DETAIL (8)
NTS • C26

THIS SPACE RESERVED

SYM	ZONE	DESCRIPTION	DATE	APPROVED
A		GENERAL REVISIONS	10/31/11	

REVISIONS

THIS DRAWING CREATED IN AUTOCAD 2010 FILE FORMAT AND WILL BE REVISED ONLY ON AN AUTOCAD SYSTEM. FILE: 14000189-C26.DWG

JONES EDMUNDS
730 NE WALDO ROAD, GAINESVILLE, FLORIDA 32641 / (352) 377-5821
3910 S WASHINGTON AVE, SUITE 210, TITUSVILLE, FLORIDA 32780 / (321) 269-2950

SIGNATURES	DATE
DRAWN J. ALLEN	10/31/11
CHECKED M. CLARK	10/31/11
SUBMITTED R. BEST	10/31/11
ST of LICENSURE: FL LICENSE NO: 69875	
Approved M. CLARK	10/31/11
K. MILLER	11/2/11

NATIONAL AERONAUTICS AND SPACE ADMINISTRATION
JOHN F. KENNEDY SPACE CENTER, NASA
KENNEDY SPACE CENTER, FLORIDA

REVITALIZE WATER & WASTEWATER SYSTEMS - KARS PARK I

STORMWATER POLLUTION PREVENTION DETAILS

FILE NO.	SIZE	DWG. NO.	REV
	F	79K38879	A

PROJ. NO. 96968.3 | SHEET 31

C26

NOTICE: When Government drawings, specifications, or other data are used for any purpose other than in connection with a definitely related Government procurement operation, the United States Government thereby incurs no responsibility nor obligation whatsoever; and the fact that the Government may have formulated, furnished, or in any way supplied the said drawings, specifications or other data is not to be regarded by implication or otherwise as in any manner licensing the holder or any other person or corporation, or conveying any rights or permission to manufacture, use, or sell any patented invention that may in any way be related thereto.

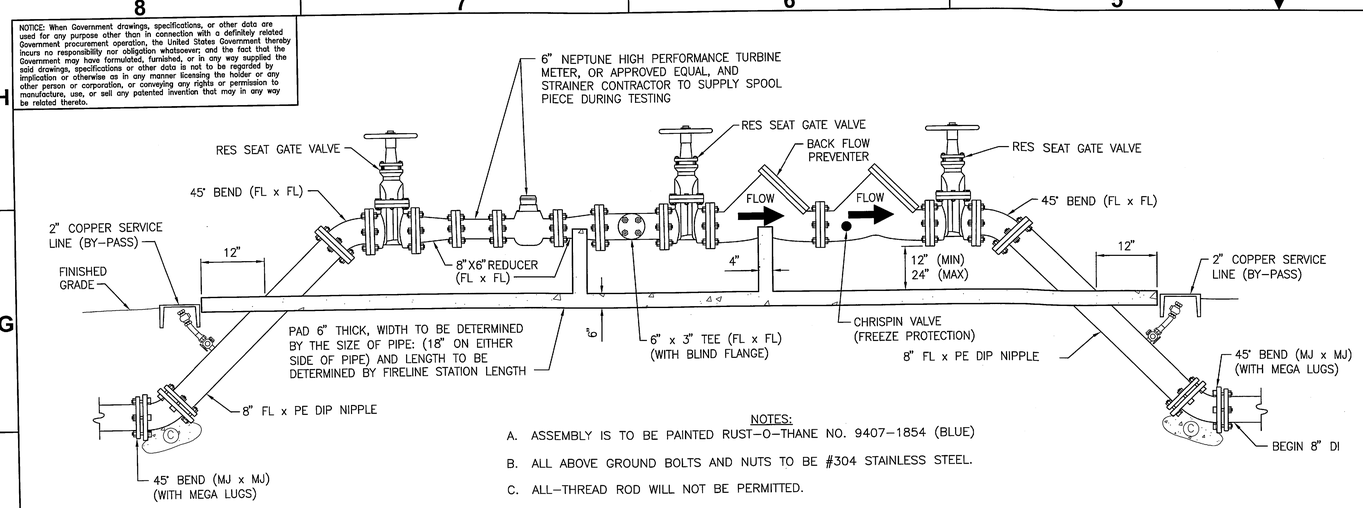

NOTES:

A. ASSEMBLY IS TO BE PAINTED RUST-O-THANE NO. 9407-1854 (BLUE)

B. ALL ABOVE GROUND BOLTS AND NUTS TO BE #304 STAINLESS STEEL.

C. ALL-THREAD ROD WILL NOT BE PERMITTED.

6" METER INSTALLATION (1 / C27)

NTS

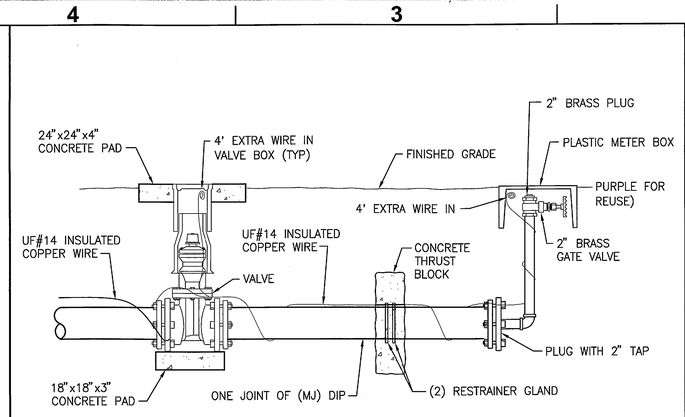

NOTE:
PERMANENT BLOW-OFFS DO NOT REQUIRE A JOINT OF D.I.P. OF A VALVE. ALSO ALL BLOW-OFFS NEED TO BE PLACED AT PROPERTY LINES.

2" TEMPORARY BLOW-OFF DETAIL (2 / C27)

NTS

NOTE:
DETAILS PROVIDED BY CITY OF COCOA AND ARE FOR INFORMATIONAL PURPOSES ONLY.

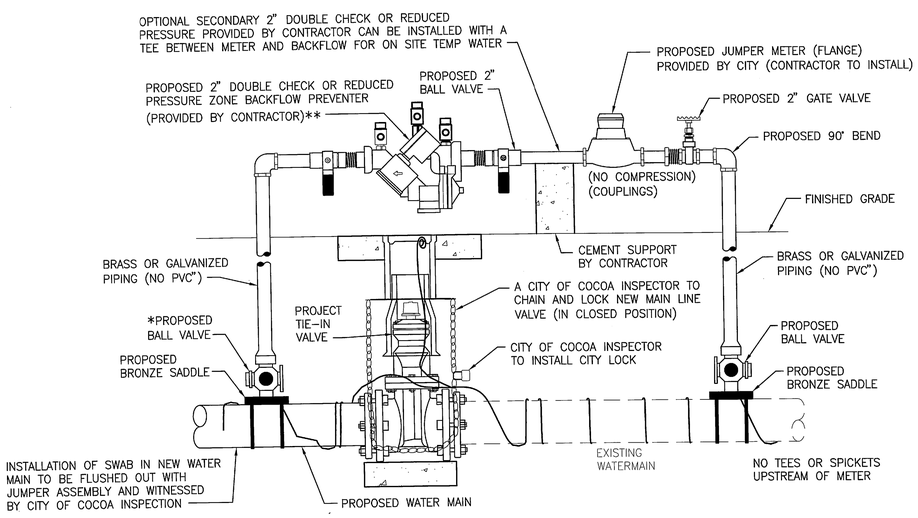

*INLET: AWWA TAPER ("CC")
THREAD OUTLET: F.I.P. THREAD

**BACKFLOW PREVENTER TO BE TESTED AFTER INSTALLATION. CONTRACTOR TO PROVIDE TEST RESULTS TO INSPECTORS.

2" TEMPORARY JUMPER DETAIL (3 / C3 | C27)

NTS

THIS SPACE RESERVED

SYM	ZONE	DESCRIPTION	DATE	APPROVED
A		GENERAL REVISIONS	12/05/11	

REVISIONS

THIS DRAWING CREATED IN AUTOCAD 2010 FILE FORMAT AND WILL BE REVISED ONLY ON AN AUTOCAD SYSTEM. FILE: 14000189-C27.DWG

JONES EDMUNDS
730 NE WALDO ROAD, GAINESVILLE, FLORIDA 32641 / (352) 377-5821
3910 S WASHINGTON AVE, SUITE 210, TITUSVILLE, FLORIDA 32780 / (321) 269-2950

SIGNATURES	DATE
DRAWN J. ALLEN	12/05/11
CHECKED M. CLARK	12/05/11
SUBMITTED R. BEST	12/05/11
ST of LICENSURE: FL LICENSE NO: 69875	
APPROVED M. CLARK	12/7/11
K. MILLER	12/9/11

NATIONAL AERONAUTICS AND SPACE ADMINISTRATION
JOHN F. KENNEDY SPACE CENTER, NASA
KENNEDY SPACE CENTER, FLORIDA

REVITALIZE WATER & WASTEWATER SYSTEMS - KARS PARK I

DETAILS

FILE NO.	SIZE	DWG. NO.	REV
	F	79K38879	A

PROJ. NO. 96968.3 | SHEET 32

C27

NOTICE: When Government drawings, specifications, or other data are used for any purpose other than in connection with a definitely related Government procurement operation, the United States Government thereby incurs no responsibility nor obligation whatsoever; and the fact that the Government may have formulated, furnished, or in any way supplied the said drawings, specifications or other data is not to be regarded by implication or otherwise as in any manner licensing the holder or any other person or corporation, or conveying any rights or permission to manufacture, use, or sell any patented invention that may in any way be related thereto.

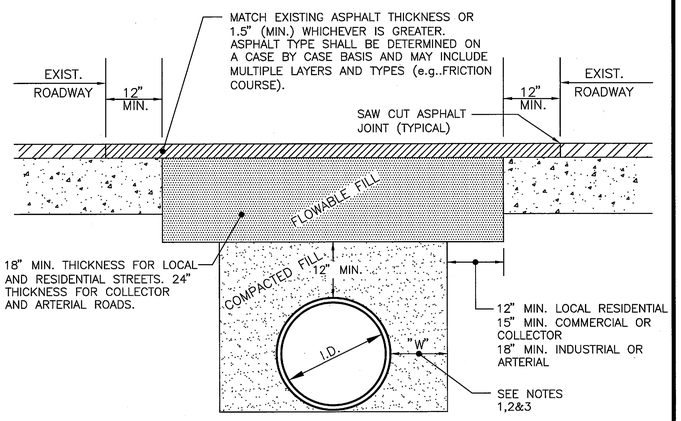

NOTES:

1. "W" SHALL BE A MINIMUM OF 6" WIDE AND OF SUFFICIENT WIDTH TO ACCOMMODATE NECESSARY COMPACTION EFFORTS. IN THE EVENT THE REQUIRED MINIMUM DENSITY IS NOT ACHIEVED, LOOSE MATERIAL SHALL BE REMOVED, REPLACED AND COMPACTED TO THE REQUIRED DENSITY, OR REPLACED WITH FULL DEPTH FLOWABLE FILL. DENSITY TESTS BELOW THE SPRING LINE OF THE PIPE ARE REQUIRED IN ADDITION TO OTHER TESTING REQUIREMENTS (IN THE EVENT FULL DEPTH FLOWABLE FILL IS USED AS BACKFILL, DENSITY REQUIREMENTS ARE WAIVED).
2. MINIMUM ALLOWABLE BACKFILL DENSITY SHALL BE 100% OF THE MAXIMUM DENSITY AT OPTIMUM MOISTURE PER AASHTO T-99.
3. FLOWABLE FILL SHALL COMPLY WITH FDOT STANDARD SPECIFICATIONS FOR ROAD AND BRIDGE CONSTRUCTION, SECTION 121, 2000 EDITION.
4. THESE ARE MINIMUM REQUIREMENTS. ADDITIONAL RESTRICTIONS MAY BE NECESSARY ON A CASE BY CASE BASIS, AS APPROVED BY THE ROADWAY AUTHORITY.
5. CONTRACTOR SHALL EXCAVATE BOTTOM OF TRENCH TO ALLOW FOR BELL SECTION OF PIPE.

DETAIL 1 NTS C28

ASPHALT PAVEMENT REMOVAL AND REPLACEMENT
SEWER STANDARD NO. 01
BREVARD COUNTY
WATER RESOURCES DEPARTMENT
2725 JUDGE FRAN JAMIESON WAY
VIERA, FLORIDA 32940
N.T.S. | DRN: TEM | JAN,05

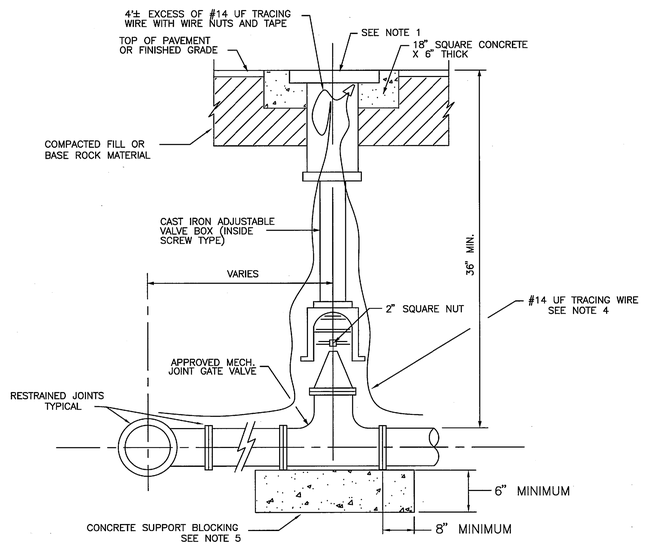

NOTES:

1) BRONZE OR CAST IRON COVER, MARKED "SEWER".
2) DOUBLE WRAP FITTINGS IN VISQUEEN PRIOR TO POURING CONCRETE.
3) VALVE BOXES OVER 4' LONG SHALL INCLUDE EXTENSION OPERATOR. OPERATING NUT MUST BE WITHIN 30" OF GROUND SURFACE. EXTENSION OPERATOR MUST BE CONNECTED TO VALVE OPERATING NUT WITH A 3/8" STAINLESS STEEL BOLT AND NUT.
4) TRACER WIRE IS TO BE INSTALLED AS SHOWN TO PREVENT INTERFERENCE WITH VALVE OPERATION.
5) CONCRETE BLOCKING TO BE INSTALLED AS TO NOT INTERFERE WITH REMOVAL OF MJ BOLTS.

DETAIL 2 NTS C28

TYPICAL
FORCE MAIN VALVE
SEWER STANDARD NO. 14
BREVARD COUNTY
UTILITY SERVICES DEPARTMENT
2725 JUDGE FRAN JAMIESON WAY
VIERA, FLORIDA 32940
N.T.S. | DRN: JH | JAN,05

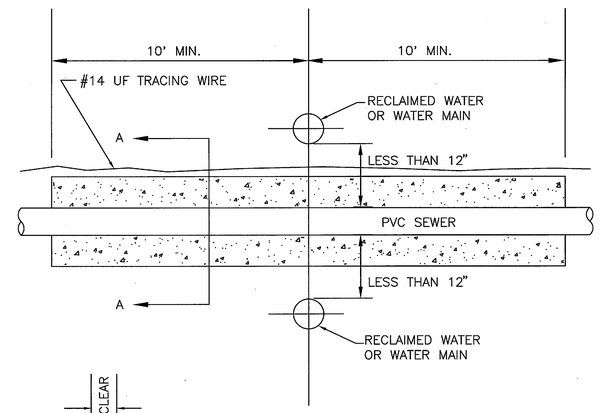

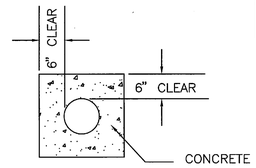

SECTION A-A AT PIPE JOINTS

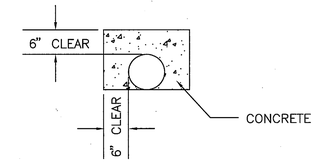

SECTION A-A AT PIPE OTHER THAN JOINTS

DETAIL 3 NTS C28

SEWER CROSSING
CONCRETE ENCASEMENT
SEWER STANDARD NO. 21
BREVARD COUNTY
WATER RESOURCES DEPARTMENT
2725 JUDGE FRAN JAMIESON WAY
VIERA, FLORIDA 32940
N.T.S. | DRN: JH | JAN,05

NOTE:
DETAILS PROVIDED BY BREVARD COUNTY AND ARE FOR INFORMATIONAL PURPOSES ONLY.

C28

THIS SPACE RESERVED

SYM	ZONE	DESCRIPTION	DATE	APPROVED
A		GENERAL REVISIONS	10/31/11	km

REVISIONS

THIS DRAWING CREATED IN AUTOCAD 2010 FILE FORMAT AND WILL BE REVISED ONLY ON AN AUTOCAD SYSTEM. FILE: 14000189-C28.DWG

JONES EDMUNDS
730 NE WALDO ROAD, GAINESVILLE, FLORIDA 32641 / (352) 377-5821
3910 S WASHINGTON AVE, SUITE 210, TITUSVILLE, FLORIDA 32780 / (321) 269-2950

SIGNATURES	DATE
DRAWN J. ALLEN	10/31/11
CHECKED M. CLARK	10/31/11
SUBMITTED R. BEST	10/31/11
ST of LICENSURE: FL LICENSE NO: 69875	
APPROVED M. CLARK	10/31/11
K. MILLER	11/2/11

NATIONAL AERONAUTICS AND SPACE ADMINISTRATION
JOHN F. KENNEDY SPACE CENTER, NASA
KENNEDY SPACE CENTER, FLORIDA

REVITALIZE WATER & WASTEWATER SYSTEMS - KARS PARK I

DETAILS

FILE NO.	SIZE	DWG. NO.	REV
	F	79K38879	A
PROJ. NO. 96968.3		SHEET 33	

NOTICE: When Government drawings, specifications, or other data are used for any purpose other than in connection with a definitely related Government procurement operation, the United States Government thereby incurs no responsibility nor obligation whatsoever; and the fact that the Government may have formulated, furnished, or in any way supplied the said drawings, specifications or other data is not to be regarded by implication or otherwise as in any manner licensing the holder or any other person or corporation, or conveying any rights or permission to manufacture, use, or sell any patented invention that may in any way be related thereto.

GRAPHIC SCALE

0 1 2 4

SCALE IN FEET
1/2" = 1'-0"

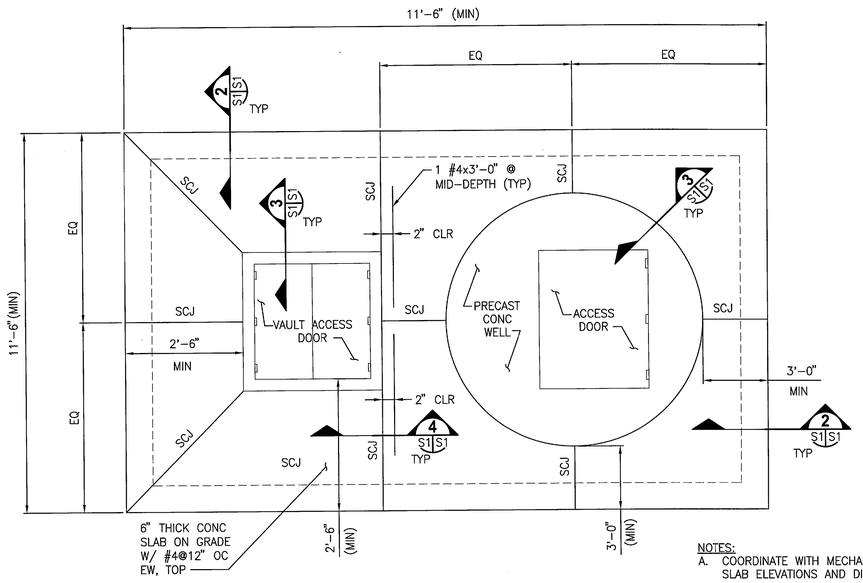

NOTES:
A. COORDINATE WITH MECHANICAL DRAWINGS FOR SLAB ELEVATIONS AND DIMENSIONS.

LIFT STATION PAD PLAN (1 / S1)
1/2" = 1'-0"

ABBREVIATIONS

ACI	AMERICAN CONCRETE INSTITUTE	FBC	FLORIDA BUILDING CODE	PSI	POUNDS PER SQUARE INCH
ASTM	AMERICAN SOCIETY FOR TESTING AND MATERIALS	LL	LIVE LOAD	REINF	REINFORCEMENT, REINFORCING
BTM	BOTTOM	MAX	MAXIMUM	SCJ	SAW CUT CONTRACTION JOINT
CJ	CONSTRUCTION JOINT	MIN	MINIMUM	SIM	SIMILAR
CLR	CLEAR	NTS	NOT TO SCALE	STD	STANDARD
CONC	CONCRETE	OC	ON CENTER(S)	T&B	TOP AND BOTTOM
CONT	CONTINUOUS	EF	EACH FACE	TOC	TOP OF CONCRETE
DCJ	DOWELED CONTRACTION JOINT	EW	EACH WAY	TYP	TYPICAL
DET	DETAIL	EXIST	EXISTING	UNO	UNLESS NOTED OTHERWISE
ø	DIAMETER	EJ	EXPANSION JOINT	W/	WITH
EA	EACH	FV	FIELD VERIFY		
EF	EACH FACE	JT	JOINT		
EQ	EQUIVALENT	OD	OUTSIDE DIAMETER		
		PSF	POUNDS PER SQUARE FOOT		

GENERAL STRUCTURAL NOTES:

1. DESIGN CODE AND CRITERIA
   - 5.1. FLORIDA BUILDING CODE (FBC), 2009 SUPPLEMENTS
   - 5.2. REINFORCED CONCRETE:
   - 5.2.1. ACI 350, CODE REQUIREMENTS FOR ENVIRONMENTAL ENGINEERING CONCRETE STRUCTURES
   - 5.2.2. OTHER STRUCTURES: ACI 318, BUILDING CODE REQUIREMENTS FOR STRUCTURAL CONCRETE
   - 5.3. LIVE LOAD: SLABS ON GRADE 250 PSF
2. EQUIPMENT PADS SHALL BE BASED ON REQUIREMENTS INDICATED IN GEOTECHNICAL REPORT. EXCAVATE TO BOTTOM OF PAD, COMPACT WITH HAND HELD COMPACTOR TO 95% PER ASTM D-1557 FOR 1'-0" BELOW EXCAVATION. PLACE CLEAN GRANULAR FILL IN 12 INCH LAYERS AND COMPACT TO A MINIMUM OF 95% OF THE MAXIMUM MODIFIED PROCTOR DRY DENSITY AS DETERMINED BY ASTM D-1557.
3. DEWATER, AS REQUIRED, SUCH THAT EXCAVATIONS ARE DRY AT THE TIME OF CONCRETE PLACEMENT. PIPING, LOSS OF FINES, AND SOIL HEAVE IS NOT PERMITTED. DAMAGE TO EXISTING ADJACENT STRUCTURES OR ROADWAYS IS NOT PERMITTED.
4. ALLOWABLE SOIL BEARING STRENGTH: 2500 PSF
5. THE REQUIRED CONCRETE STRENGTH BASED ON AN AGE OF 28 DAYS FOR ELEMENTS IN THE STRUCTURE SHALL NOT BE LESS:
   5.1. 3,000 PSI FOR CONCRETE FOUNDATION, SLAB ON GRADE
6. CONSOLIDATE ALL CONCRETE USING MECHANICAL VIBRATING EQUIPMENT.
7. DO NOT PLACE CONCRETE DURING RAIN OR IF RAIN IS LIKELY TO OCCUR PRIOR TO CONCRETE HARDENING.
8. EPOXY GROUT FOR ANCHOR BOLTS SHALL CONFORM TO ASTM C579 AND ASTM C307 AND SHALL BE MADE BY "HILTI" OR APPROVED EQUAL WITH CO'S APPROVAL. "HILTI" HIT HY 150/HIT-ICE INJECTION ADHESIVE SHALL BE SELECTED.
9. CLEAR COVER FOR REINFORCING BARS, UNLESS OTHERWISE NOTED, SHALL BE:
   - 9.1. CAST AGAINST EARTH 3" UNO
   - 9.2. CONCRETE EXPOSED TO WEATHER 2" UNO
10. PROVIDE 3/4" CHAMFER ON ALL EXPOSED EDGES OF CONCRETE.
11. SUBGRADE PREPARATIONS FOR SLAB ON GRADE AND FOUNDATION SHALL BE BASED ON THE EVALUATIONS AND RECOMMENDATIONS OF THE REPORT OF GEOTECHNICAL EXPLORATION AND EVALUATION BY THE GEOTECHNICAL ENGINEER. THE GEOTECHNICAL INVESTIGATION IS PREFORMED BY:
    - NODARSE & ASSOCIATES, INC. (N&A)
    - N&A REPORT NO. :06-10-0040-101
    - REPORT DATE: JULY 25, 2011

    THIS REFERENCE IS FOR INFORMATION ONLY.

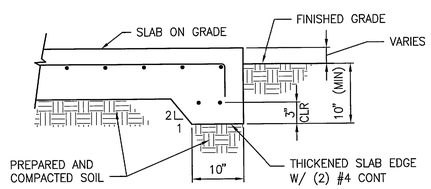

THICKENED SLAB EDGE DETAIL (2 / S1 S1)
NTS

NOTE:
SAW-CUT JOINTS SHALL BE PERFORMED WITHIN 4 TO 8 HOURS AFTER CONCRETE PLACEMENT.

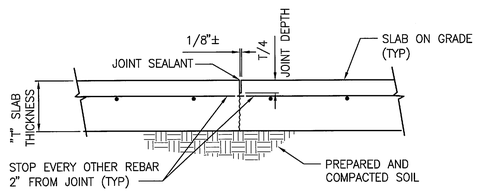

SAW-CUT CONTRACTION JOINT (SCJ) DETAIL (4 / S1 S1)
NTS

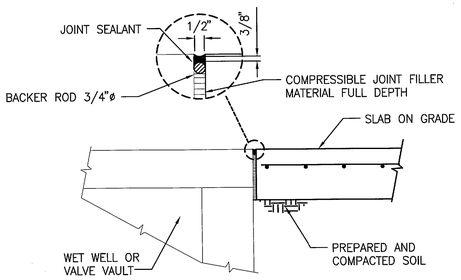

SLAB JOINT DETAIL (3 / S1)
NTS

THIS SPACE RESERVED

SYM	ZONE	DESCRIPTION	DATE	APPROVED
A		GENERAL REVISIONS	12/05/11	KPM

REVISIONS

THIS DRAWING CREATED IN AUTOCAD 2010 FILE FORMAT AND WILL BE REVISED ONLY ON AN AUTOCAD SYSTEM. FILE: 14000189-S01.DWG

JONES EDMUNDS
730 NE WALDO ROAD, GAINESVILLE, FLORIDA 32641 / (352) 377-5821
3910 S WASHINGTON AVE, SUITE 210, TITUSVILLE, FLORIDA 32780 / (321) 269-2950

SIGNATURES	DATE
DRAWN G O'LEARY	12/05/11
CHECKED N. PONTILLO	12/05/11
SUBMITTED W. LI	12/05/11
ST of LICENSURE: FL LICENSE NO: 56104	
APPROVED M. CLARK	12/05/11
K. MILLER	12/5/11

NATIONAL AERONAUTICS AND SPACE ADMINISTRATION
JOHN F. KENNEDY SPACE CENTER, NASA
KENNEDY SPACE CENTER, FLORIDA

REVITALIZE WATER & WASTEWATER SYSTEMS - KARS PARK I

STRUCTURAL DETAILS

FILE NO.	SIZE	DWG. NO.	REV
	F	79K38879	A
PROJ. NO. 96968.3		SHEET 34	

S1

NOTICE: When Government drawings, specifications, or other data are used for any purpose other than in connection with a definitely related Government procurement operation, the United States Government thereby incurs no responsibility nor obligation whatsoever; and the fact that the Government may have formulated, furnished, or in any way supplied the said drawings, specifications or other data is not to be regarded by implication or otherwise as in any manner licensing the holder or any other person or corporation, or conveying any rights or permission to manufacture, use, or sell any patented invention that may in any way be related thereto.

LIFT STATION DATA TABLE

LIFT STATION	GEOMETRY	T/CONC EL	GRADE EL	DISCHARGE PIPE SIZE	DISCHARGE IE	INFLUENT SEWER IE	HIGH WATER LEVEL/ REDUNDANT ALL PUMPS ON EL	LAG PUMP ON EL	LEAD PUMP ON EL	ALL PUMPS OFF EL	LOW WATER LEVEL/ REDUNDANT ALL PUMPS OFF EL	BASE EL	BASE WIDTH	WET WELL ID	VALVE VAULT LENGTH	VALVE VAULT WIDTH	VALVE VAULT DEPTH	MAINTENANCE PAD LENGTH	MAINTENANCE PAD WIDTH
LIFT STATION #1		2.95	2.70	4"	−0.62	SEE CIVIL SHEETS	−6.20	−6.70	−7.20	−8.95	−9.45	−12.25	9'−0"	5'−0"	7'−0"	6'−6"	5'−6"	23'−0"	12'−6"
LIFT STATION #2		2.75	2.50	1.5"	−0.63		2.25	1.75	1.25	0.5	0	−2	8'−0"	4'−0"	N/A	N/A	N/A	11'−6"	11'−6"
LIFT STATION #3		4.50	4.25	1.5"	1.13		1.00	0.50	0.00	−0.66	−1.16	−3.25	8'−0"	4'−0"	N/A	N/A	N/A	11'−6"	11'−6"

LIFT STATION	PUMP DATA	FLOW(GPM)	HEAD(FT)	Hp	RPM	IMPELLER SIZE	VOLTAGE	PHASE	MANUFACTURER*	MODEL No.*	LIFT STATION
LIFT STATION #1		100	62.4	15	3450	5.25	230	3	HYDROMATIC	S4HVX−1500	LIFT STATION #1
LIFT STATION #2		25	48	2	3450	4.25	230	1	HYDROMATIC	HPGX−200	LIFT STATION #2
LIFT STATION #3		25	48	2	3450	4.25	230	1	HYDROMATIC	HPGX−200	LIFT STATION #3

* − OR APPROVED EQUAL

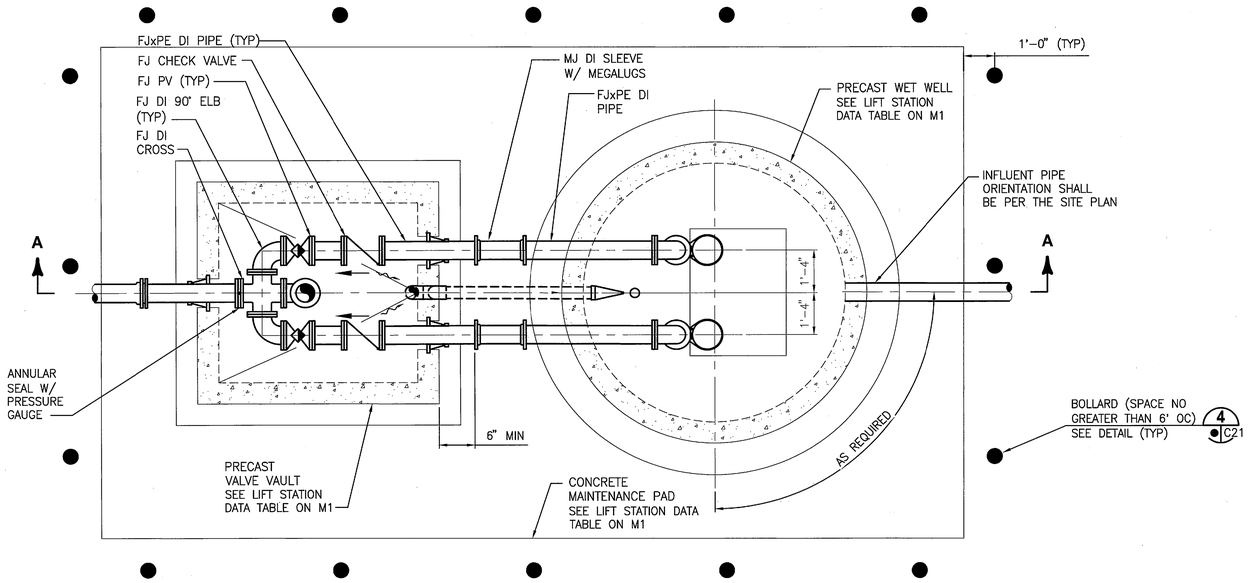

PLAN
1/2"=1'−0"

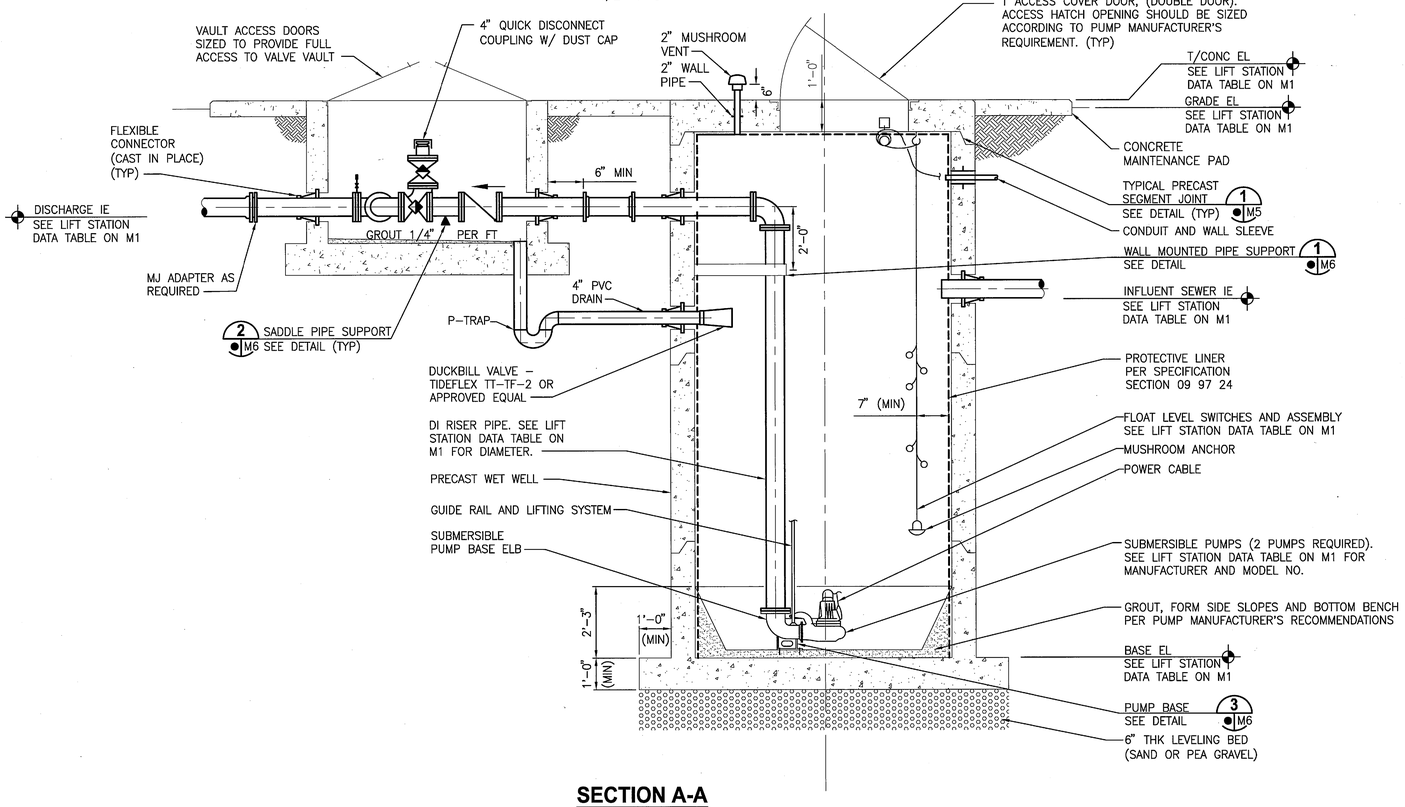

SECTION A-A
1/2"=1'−0"

NOTES

A. PUMP PLACEMENT SHALL BE PER MANUFACTURER'S RECOMMENDATIONS.

B. CONTRACTOR SHALL VERIFY PUMP MANUFACTURER'S REQUIREMENTS FOR OPENING FOR CAST−IN PLACE ACCESS COVER FRAME. CONTRACTOR SHALL VERIFY PUMP DIMENSIONS FOR OPENING CLEARANCE.

C. EXTERIOR OF WET WELL SHALL BE PAINTED WITH COAL TAR EPOXY AS SPECIFIED.

D. ALL ALUMINUM SURFACES IN CONTACT WITH CONCRETE SHALL BE PAINTED PER SPECIFICATIONS.

E. PROVIDE SPARK−PROOF CONTACT BETWEEN PUMPS AND GUIDE RAIL SYSTEM.

F. SUSPEND FLOAT CABLES FROM 316 SS CABLE W/ EPOXY OR RUBBER COATED CAST IRON MUSHROOM ANCHOR OUT OF INFLUENT FLOW PATH. USE SS CLAMPS TO AFFIX FLOATS SECURELY TO ANCHOR. LOOP 316 SS CABLE THROUGH HOLES IN MUSHROOM ANCHOR TO ENSURE ANCHOR STAYS ATTACHED TO CABLE. USE ALL 316 SS FITTINGS AND HARDWARE (EXCEPT ANCHOR) FOR ASSEMBLY. ASSEMBLY NEEDS TO BE REACHABLE AND REMOVABLE FROM ACCESS COVER DOOR.

G. EACH ELECTRIC PUMP CABLE SHALL BE SUPPORTED FROM A SS CABLE RACK VIA A SS KELLUMS CABLE GRIP (OR APPROVED EQUAL).

H. LIFTING PROVISIONS AND DISCHARGE PIPING TO BE PER MANUFACTURER'S SPECIFICATIONS.

J. AFTER THE PROPOSED LIFT STATION AND FORCE MAIN ARE OPERATIONAL AND THE CERTIFICATION OF COMPLETION HAS BEEN OBTAINED FROM THE FDEP, THE CONTRACTOR SHALL:

1. DIVERT FLOW TO THE PROPOSED LIFT STATION
2. PLUG ALL SEWER LINES CONNECTING TO THE EXISTING SEPTIC TANK WITH NON−SHRINK GROUT (MINIMUM THICKNESS FOR EACH PLUG SHALL BE EQUAL TO THE RESPECTIVE PIPE DIAMETER).
3. SOD ALL DISTURBED AREAS

GRAPHIC SCALE
0 1 2 4
SCALE IN FEET
1/2"−1'−0"

M1

THIS SPACE RESERVED

SYM	ZONE	DESCRIPTION	DATE	APPROVED
A		GENERAL REVISIONS	10/31/11	KM

REVISIONS

THIS DRAWING CREATED IN AUTOCAD 2010 FILE FORMAT AND WILL BE REVISED ONLY ON AN AUTOCAD SYSTEM. FILE: 14000189−M01.DWG

JONES EDMUNDS
730 NE WALDO ROAD, GAINESVILLE, FLORIDA 32641 / (352) 377-5821
3910 S WASHINGTON AVE, SUITE 210, TITUSVILLE, FLORIDA 32780 / (321) 269-2950

SIGNATURES	DATE
DRAWN P. UPSTILL	10/31/11
CHECKED M. CLARK	10/31/11
SUBMITTED R. BEST	10/31/11
ST of LICENSURE: FL LICENSE NO: 69875	
APPROVED M. CLARK	10/31/11
K. MILLER	11/2/11

NATIONAL AERONAUTICS AND SPACE ADMINISTRATION
JOHN F. KENNEDY SPACE CENTER, NASA
KENNEDY SPACE CENTER, FLORIDA

REVITALIZE WATER & WASTEWATER SYSTEMS - KARS PARK I

MASTER LIFT STATION PLAN AND SECTION

FILE NO.	SIZE	DWG. NO.	REV
	F	79K38879	A
PROJ. NO. 96968.3		SHEET 35	

NOTICE: When Government drawings, specifications, or other data are used for any purpose other than in connection with a definitely related Government procurement operation, the United States Government thereby incurs no responsibility nor obligation whatsoever; and the fact that the Government may have formulated, furnished, or in any way supplied the said drawings, specifications or other data is not to be regarded by implication or otherwise as in any manner licensing the holder or any other person or corporation, or conveying any rights or permission to manufacture, use, or sell any patented invention that may in any way be related thereto.

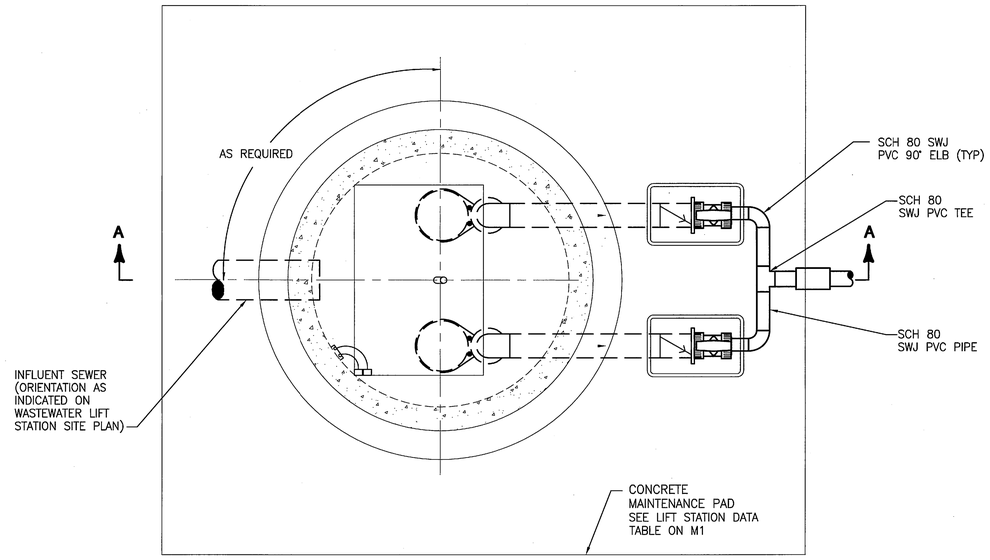

PLAN

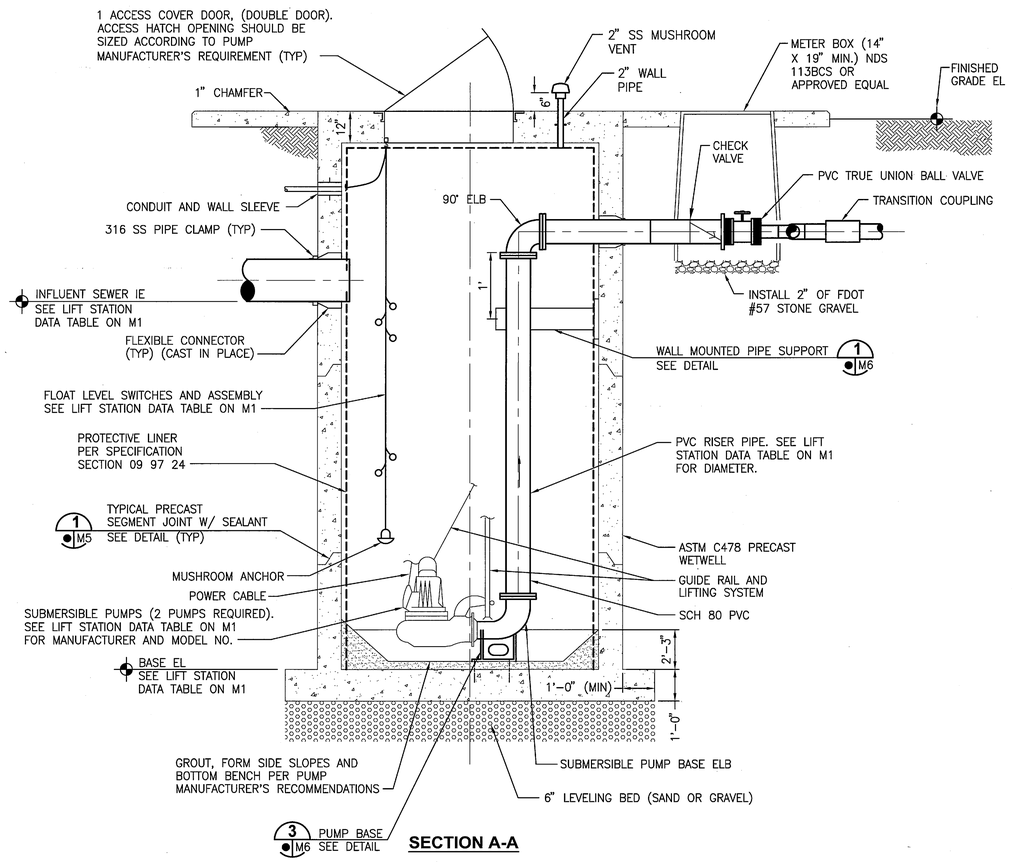

SECTION A-A

GRINDER PUMP WASTEWATER LIFT STATION DETAIL 1 M2

NTS

NOTES

A. PUMP PLACEMENT SHALL BE PER MANUFACTURER'S RECOMMENDATIONS.

B. CONTRACTOR SHALL VERIFY PUMP MANUFACTURER'S REQUIREMENTS FOR OPENING FOR CAST–IN PLACE ACCESS COVER FRAME. CONTRACTOR SHALL VERIFY PUMP DIMENSIONS FOR OPENING CLEARANCE.

C. EXTERIOR OF WET WELL SHALL BE PAINTED WITH COAL TAR EPOXY AS SPECIFIED.

D. ALL ALUMINUM SURFACES IN CONTACT WITH CONCRETE SHALL BE PAINTED PER SPECIFICATIONS.

E. PROVIDE SPARK–PROOF CONTACT BETWEEN PUMPS AND GUIDE RAIL SYSTEM.

F. SUSPEND FLOAT CABLES FROM 316 SS CABLE W/ EPOXY OR RUBBER COATED CAST IRON MUSHROOM ANCHOR OUT OF INFLUENT FLOW PATH. USE SS CLAMPS TO AFFIX FLOATS SECURELY TO ANCHOR. LOOP 316 SS CABLE THROUGH HOLES IN MUSHROOM ANCHOR TO ENSURE ANCHOR STAYS ATTACHED TO CABLE. USE ALL 316 SS FITTINGS AND HARDWARE (EXCEPT ANCHOR) FOR ASSEMBLY. ASSEMBLY NEEDS TO BE REACHABLE AND REMOVABLE FROM ACCESS COVER DOOR.

G. EACH ELECTRIC PUMP CABLE SHALL BE SUPPORTED FROM A SS CABLE RACK VIA A SS KELLUMS CABLE GRIP (OR APPROVED EQUAL).

H. AFTER THE PROPOSED LIFT STATION AND FORCE MAIN ARE OPERATIONAL AND THE CERTIFICATION OF COMPLETION HAS BEEN OBTAINED FROM THE FDEP, THE CONTRACTOR SHALL:

1. DIVERT FLOW TO THE PROPOSED LIFT STATION
2. PLUG ALL SEWER LINES CONNECTING TO THE EXISTING SEPTIC TANK WITH NON–SHRINK GROUT (MINIMUM THICKNESS FOR EACH PLUG SHALL BE EQUAL TO THE RESPECTIVE PIPE DIAMETER).
3. SOD ALL DISTURBED AREAS

THIS SPACE RESERVED

SYM	ZONE	DESCRIPTION	DATE	APPROVED
A		GENERAL REVISIONS	10/31/11	KM

REVISIONS

THIS DRAWING CREATED IN AUTOCAD 2010 FILE FORMAT AND WILL BE REVISED ONLY ON AN AUTOCAD SYSTEM. FILE: 14000189–M02.DWG

JONES EDMUNDS
730 NE WALDO ROAD, GAINESVILLE, FLORIDA 32641 / (352) 377-5821
3910 S WASHINGTON AVE, SUITE 210, TITUSVILLE, FLORIDA 32780 / (321) 269-2950

SIGNATURES	DATE
DRAWN P. UPSTILL	10/31/11
CHECKED M. CLARK	10/31/11
SUBMITTED R. BEST	10/31/11
ST of LICENSURE: FL LICENSE NO: 69875	
APPROVED M. CLARK	10/31/11
K. MILLER	11/2/11

NATIONAL AERONAUTICS AND SPACE ADMINISTRATION
JOHN F. KENNEDY SPACE CENTER, NASA
KENNEDY SPACE CENTER, FLORIDA

REVITALIZE WATER & WASTEWATER SYSTEMS - KARS PARK I

GRINDER LIFT STATION PLAN AND SECTION

FILE NO.	SIZE	DWG. NO.	REV
	F	79K38879	A
PROJ. NO. 96968.3		SHEET 36	

M2

NOTICE: When Government drawings, specifications, or other data are used for any purpose other than in connection with a definitely related Government procurement operation, the United States Government thereby incurs no responsibility nor obligation whatsoever; and the fact that the Government may have formulated, furnished, or in any way supplied the said drawings, specifications or other data is not to be regarded by implication or otherwise as in any manner licensing the holder or any other person or corporation, or conveying any rights or permission to manufacture, use, or sell any patented invention that may in any way be related thereto.

THIS DRAWING IS FOR INFORMATION ONLY

NOTE:

INFORMATION SHOWN ON THIS DRAWING IS PART OF SEPTIC SYSTEM PACKAGE IN SPECIFICATION SECTION 33 30 00 DETAILS SHOWN ARE FOR INFORMATION ONLY.

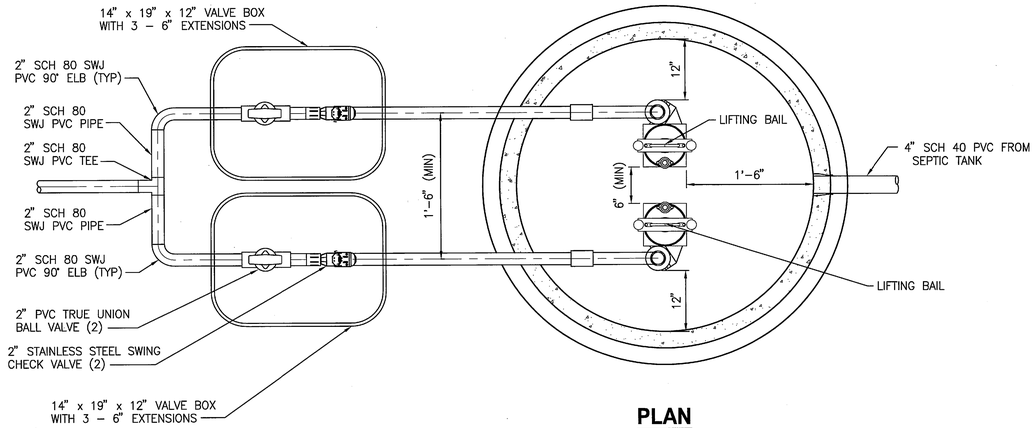

PLAN

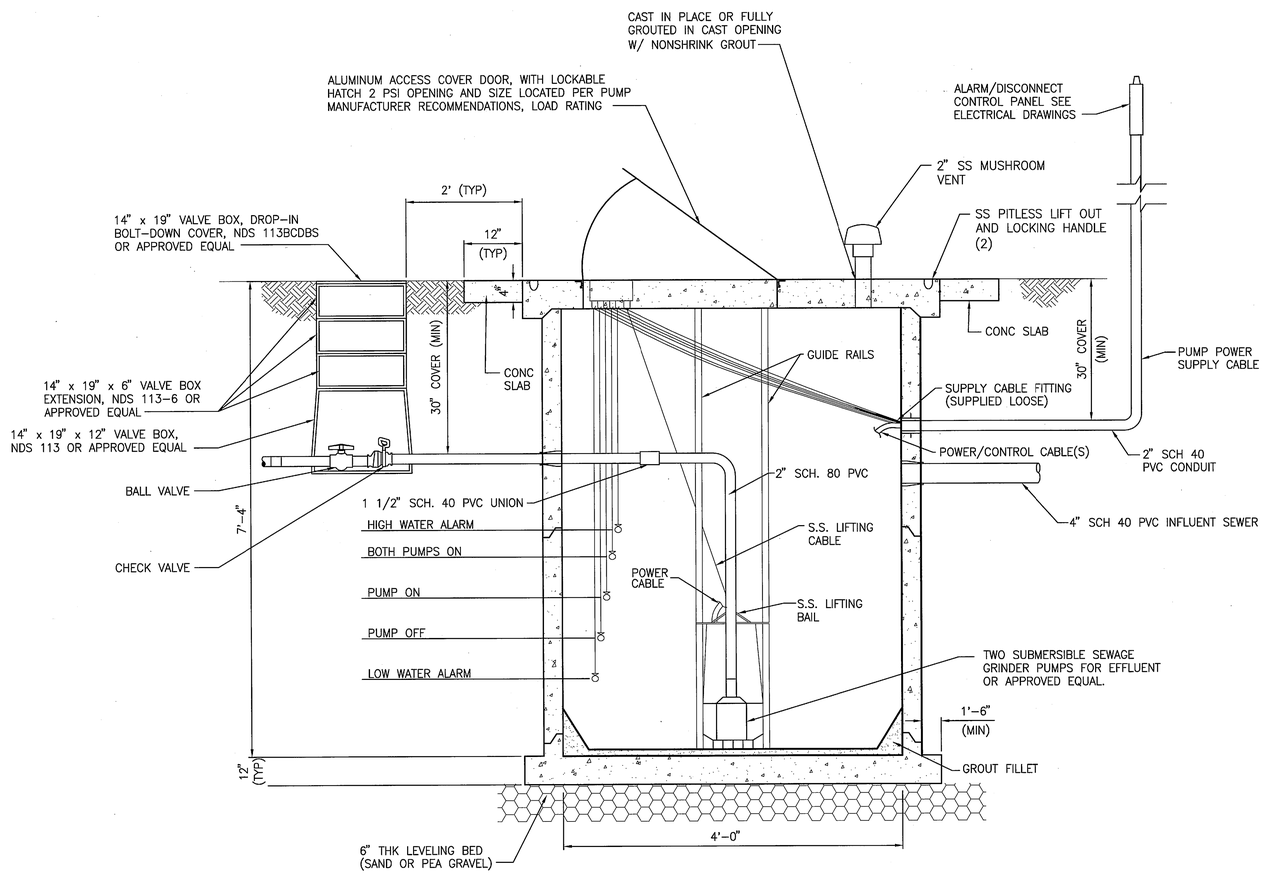

SECTION

TYPICAL DUPLEX SUBMERSIBLE GRINDER PUMP DOSING STATION (1 / M3)

NTS

THIS SPACE RESERVED

SYM	ZONE	DESCRIPTION	DATE	APPROVED
A		GENERAL REVISIONS	10/31/11	

REVISIONS

THIS DRAWING CREATED IN AUTOCAD 2010 FILE FORMAT AND WILL BE REVISED ONLY ON AN AUTOCAD SYSTEM. FILE: 14000189–M03.DWG

JONES EDMUNDS

730 NE WALDO ROAD, GAINESVILLE, FLORIDA 32641 / (352) 377-5821
3910 S WASHINGTON AVE, SUITE 210, TITUSVILLE, FLORIDA 32780 / (321) 269-2950

SIGNATURES	DATE
DRAWN P. UPSTILL	10/31/11
CHECKED M. CLARK	10/31/11
SUBMITTED R. BEST	10/31/11
ST of LICENSURE: FL LICENSE NO: 69875	
APPROVED M. CLARK	10/31/11
K. MILLER	11/2/11

NATIONAL AERONAUTICS AND SPACE ADMINISTRATION
JOHN F. KENNEDY SPACE CENTER, NASA
KENNEDY SPACE CENTER, FLORIDA

REVITALIZE WATER & WASTEWATER SYSTEMS - KARS PARK I

DOSING STATION PLAN AND SECTION

FILE NO.	SIZE	DWG. NO.	REV
	F	79K38879	A
PROJ. NO. 96968.3		SHEET 37	

M3

NOTICE: When Government drawings, specifications, or other data are used for any purpose other than in connection with a definitely related Government procurement operation, the United States Government thereby incurs no responsibility nor obligation whatsoever; and the fact that the Government may have formulated, furnished, or in any way supplied the said drawings, specifications or other data is not to be regarded by implication or otherwise as in any manner licensing the holder or any other person or corporation, or conveying any rights or permission to manufacture, use, or sell any patented invention that may in any way be related thereto.

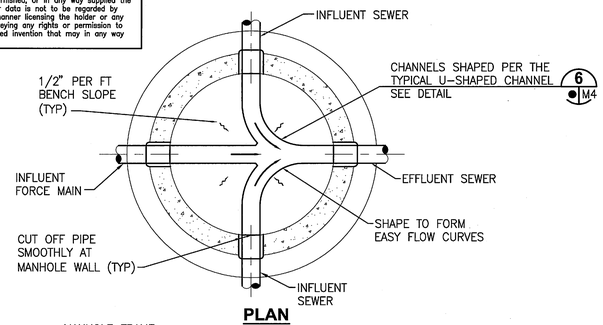

PLAN

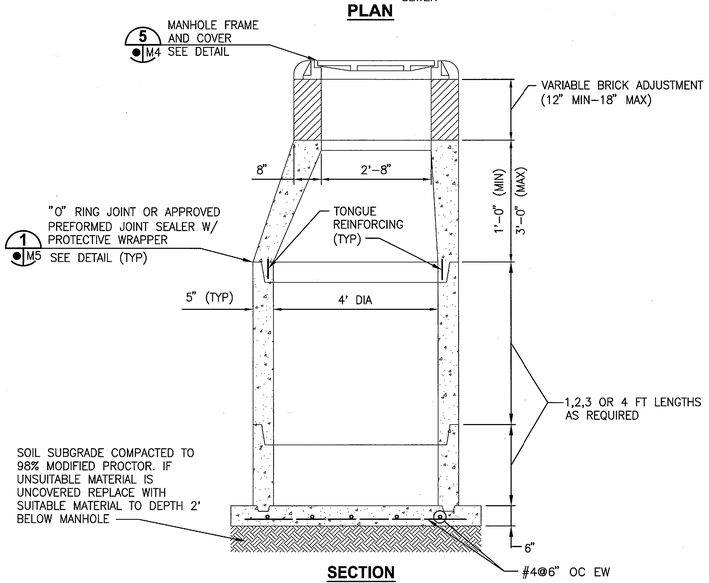

SECTION

NOTES:

A. FOR ALL MANHOLE TYPES, IF BASE RESTS IN CLAY SOILS, EXCAVATE AN ADDITIONAL 24", AND BACKFILL IN AND AROUND STRUCTURE "FULL DEPTH" WITH A–3 RATED MATERIAL. CONNECTIONS AND GROUTING IN MANHOLE NOT SHOWN.

B. FOR SEWER PIPE CONNECTIONS LOCATIONS AND INVERTS, SEE PIPE DRAWINGS FOR DETAILS REGARDING SEWER PIPE CONNECTIONS TO MANHOLE, SEE TYPICAL INFLUENT, EFFLUENT AND FORCE MAIN CONNECTIONS DETAILS ON THIS SHEET.

PRECAST CONCRETE MANHOLE DETAIL 1/M4

NTS

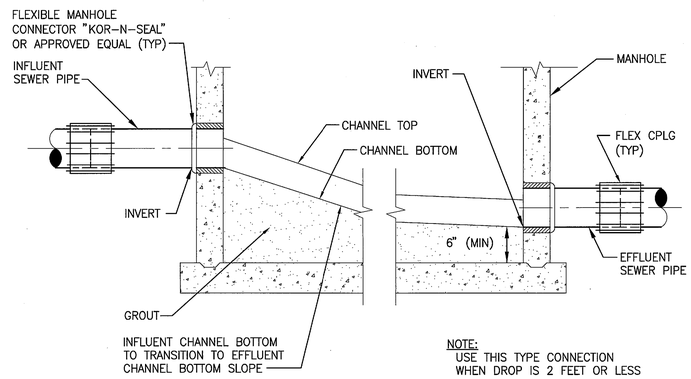

NOTE:
USE THIS TYPE CONNECTION WHEN DROP IS 2 FEET OR LESS

TYPICAL GRAVITY CONNECTION TO MANHOLE DETAIL 3/M4

NTS

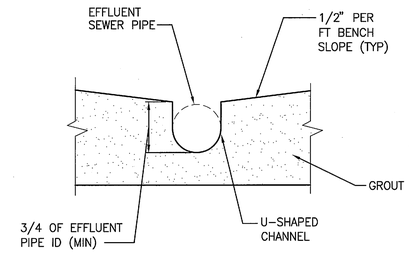

TYPICAL U-SHAPED CHANNEL DETAIL 6/M4

NTS

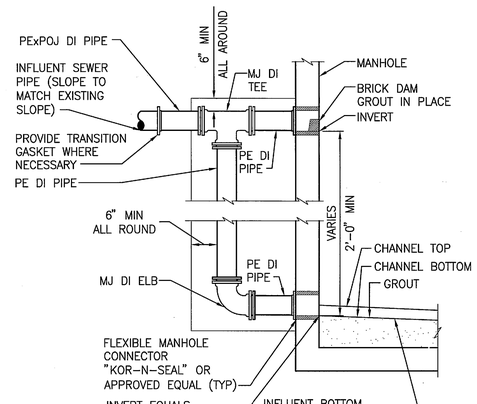

NOTE:
USE THIS TYPE CONNECTION WHEN DROP IS GREATER THAN 2 FEET

DROP PIPE DETAIL 4/M4

NTS

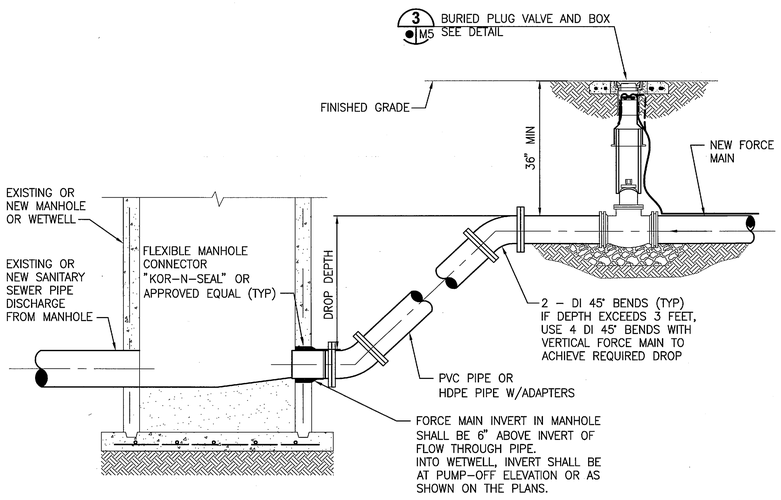

TYPICAL FORCE MAIN CONNECTION TO SANITARY MANHOLE OR WETWELL 2/M4

NTS

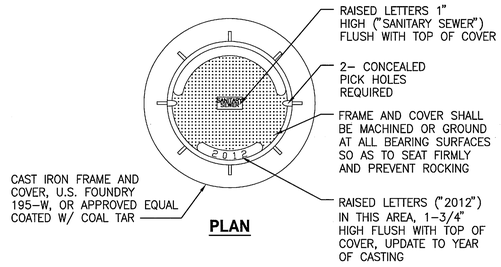

PLAN

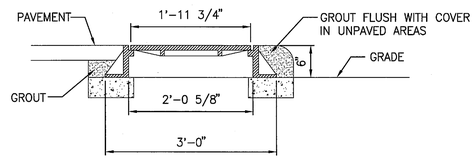

SECTION

MANHOLE FRAME AND COVER DETAIL 5/M4

NTS

THIS SPACE RESERVED

SYM	ZONE	DESCRIPTION	DATE	APPROVED
A		GENERAL REVISIONS	10/31/11	

REVISIONS

THIS DRAWING CREATED IN AUTOCAD 2010 FILE FORMAT AND WILL BE REVISED ONLY ON AN AUTOCAD SYSTEM. FILE: 14000189–M04.DWG

JONES EDMUNDS
730 NE WALDO ROAD, GAINESVILLE, FLORIDA 32641 / (352) 377-5821
3910 S WASHINGTON AVE, SUITE 210, TITUSVILLE, FLORIDA 32780 / (321) 269-2950

SIGNATURES	DATE
DRAWN P. UPSTILL	10/31/11
CHECKED M. CLARK	10/31/11
SUBMITTED R. BEST	10/31/11
ST of LICENSURE: FL LICENSE NO: 69875	
APPROVED M. CLARK	10/31/11
K. MILLER	11/2/11

NATIONAL AERONAUTICS AND SPACE ADMINISTRATION
JOHN F. KENNEDY SPACE CENTER, NASA
KENNEDY SPACE CENTER, FLORIDA

REVITALIZE WATER & WASTEWATER SYSTEMS - KARS PARK I

GRAVITY SEWER MANHOLE AND SEWER DETAILS

FILE NO.	SIZE	DWG. NO.	REV
	F	79K38879	A

PROJ. NO. 96968.3 SHEET 38

M4

NOTICE: When Government drawings, specifications, or other data are used for any purpose other than in connection with a definitely related Government procurement operation, the United States Government thereby incurs no responsibility nor obligation whatsoever; and the fact that the Government may have formulated, furnished, or in any way supplied the said drawings, specifications or other data is not to be regarded by implication or otherwise as in any manner licensing the holder or any other person or corporation, or conveying any rights or permission to manufacture, use, or sell any patented invention that may in any way be related thereto.

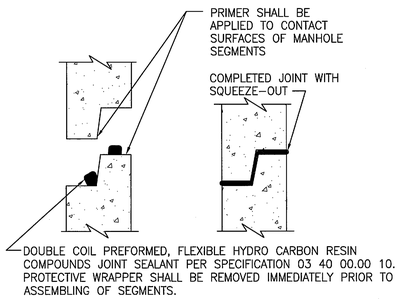

TYPICAL PRECAST SEGMENT JOINT DETAIL W/ SEALANT (1 / M5)

NTS

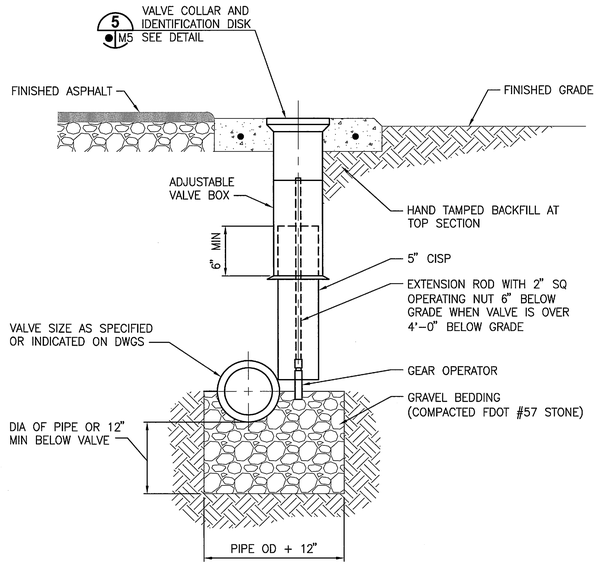

BURIED PLUG VALVE AND BOX DETAIL (3 / M5)

NTS

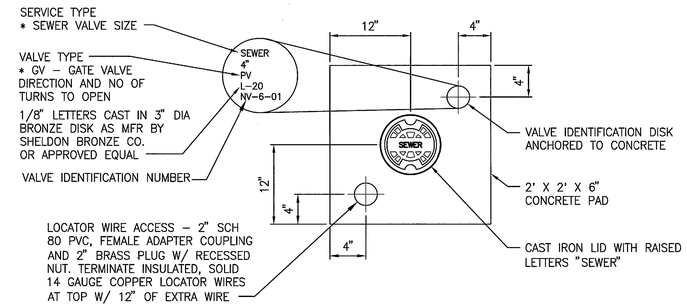

TOP VIEW

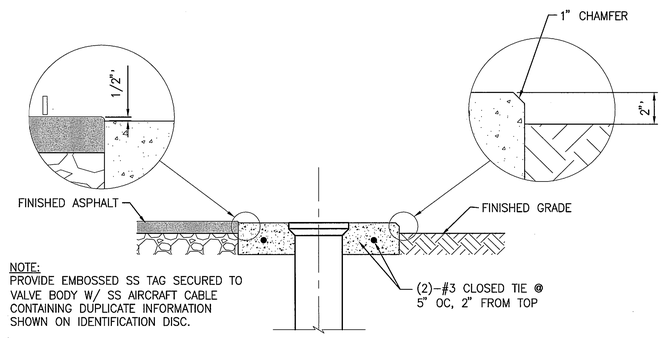

NOTE:
PROVIDE EMBOSSED SS TAG SECURED TO VALVE BODY W/ SS AIRCRAFT CABLE CONTAINING DUPLICATE INFORMATION SHOWN ON IDENTIFICATION DISC.

SEWER VALVE COLLAR AND IDENTIFICATION DISK DETAIL (5 / M5)

NTS

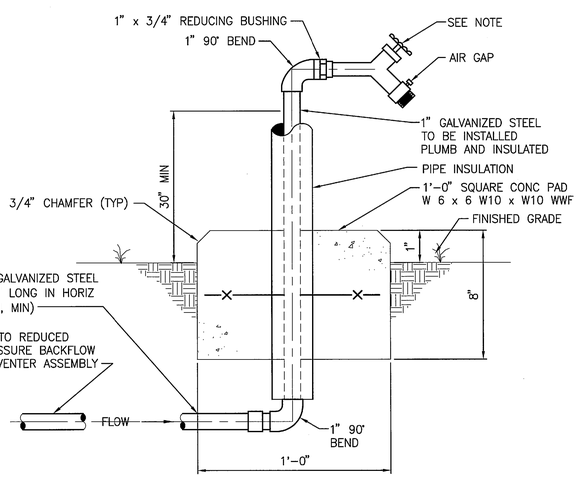

NOTE:
3/4" BRASS, ANGLE BODY HOSE BIBB. BODY FLANGE SHALL BE PROVIDED WITH INTERNAL PIPE THREAD TO SUIT 3/4" PIPE. BODY SHALL BE SUITABLE FOR WRENCH GRIP. HOSE BIBB SHALL HAVE 3/4" EXPOSED HOSE THREADS. HOSE BIBB HANDLE SHALL BE SECURELY ATTACHED TO STEM.

TYPICAL POTABLE HOSE BIBB DETAIL (2 / M5)

NTS

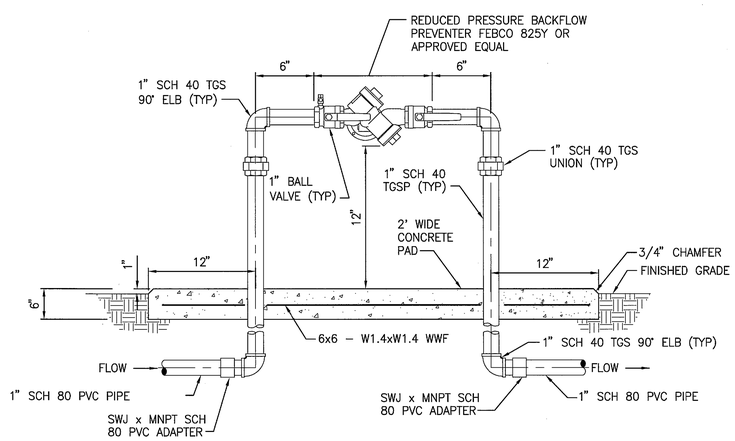

NOTES:
A. SIZE OF RPBFP, ADAPTERS, ETC. SHALL BE THE SAME AS THE SERVICE LINE SHOWN ON THE PLAN.
B. INSULATE ABOVE GRADE PIPING AND BACKFLOW PREVENTER ASSEMBLY.
C. REFER TO SECTION 33 11 00 FOR REDUCED PRESSURE BACKFLOW PREVENTER SPECIFICATIONS.

REDUCED PRESSURE BACKFLOW PREVENTER DETAIL (4 / M5)

NTS

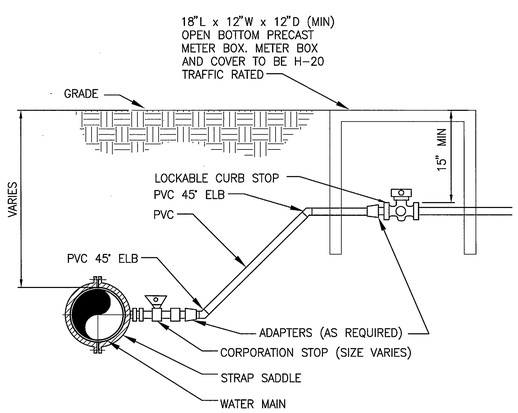

TYPICAL SERVICE TAP DETAIL (6 / M5)

NTS

THIS SPACE RESERVED

SYM	ZONE	DESCRIPTION	DATE	APPROVED
A		GENERAL REVISIONS	12/05/11	

REVISIONS

THIS DRAWING CREATED IN AUTOCAD 2010 FILE FORMAT AND WILL BE REVISED ONLY ON AN AUTOCAD SYSTEM. FILE: 14000189-M05.DWG

JONES EDMUNDS
730 NE WALDO ROAD, GAINESVILLE, FLORIDA 32641 / (352) 377-5821
3910 S WASHINGTON AVE, SUITE 210, TITUSVILLE, FLORIDA 32780 / (321) 269-2950

SIGNATURES	DATE
DRAWN P. UPSTILL	12/05/11
CHECKED M. CLARK	12/05/11
SUBMITTED R. BEST	12/05/11
ST of LICENSURE: FL LICENSE NO: 69875	
APPROVED M. CLARK	12/7/11
K. MILLER	12/7/11

NATIONAL AERONAUTICS AND SPACE ADMINISTRATION
JOHN F. KENNEDY SPACE CENTER, NASA
KENNEDY SPACE CENTER, FLORIDA

REVITALIZE WATER & WASTEWATER SYSTEMS - KARS PARK I

MECHANICAL DETAILS

FILE NO.	SIZE	DWG. NO.	REV
	F	79K38879	A
PROJ. NO. 96968.3		SHEET 39	

M5

NOTICE: When Government drawings, specifications, or other data are used for any purpose other than in connection with a definitely related Government procurement operation, the United States Government thereby incurs no responsibility nor obligation whatsoever; and the fact that the Government may have formulated, furnished, or in any way supplied the said drawings, specifications or other data is not to be regarded by implication or otherwise as in any manner licensing the holder or any other person or corporation, or conveying any rights or permission to manufacture, use, or sell any patented invention that may in any way be related thereto.

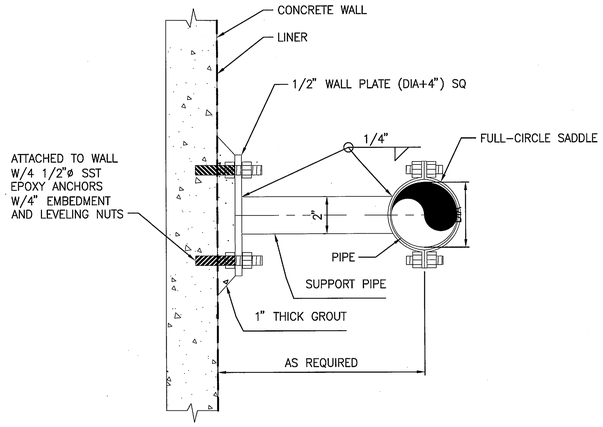

NOTES:
A. ALL HARDWARE, PLATE, SADDLE, ETC, SHALL BE 300 SERIES SST.
B. SUPPORT PIPE SHALL BE SCH 40.

WALL-MOUNTED PIPE SUPPORT (TOP VIEW) DETAIL 1/M6
NTS

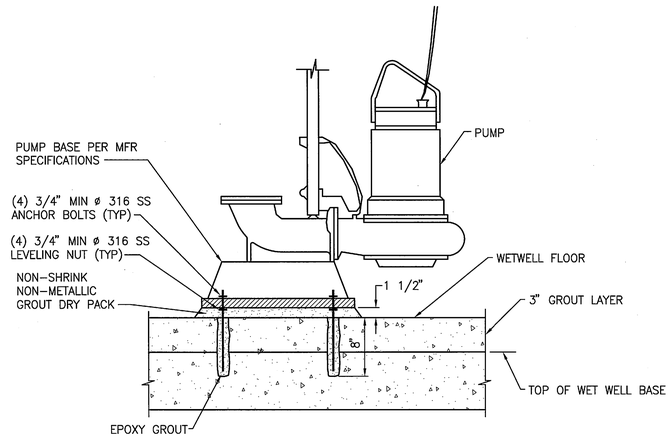

PUMP BASE DETAIL 3/M6
NTS

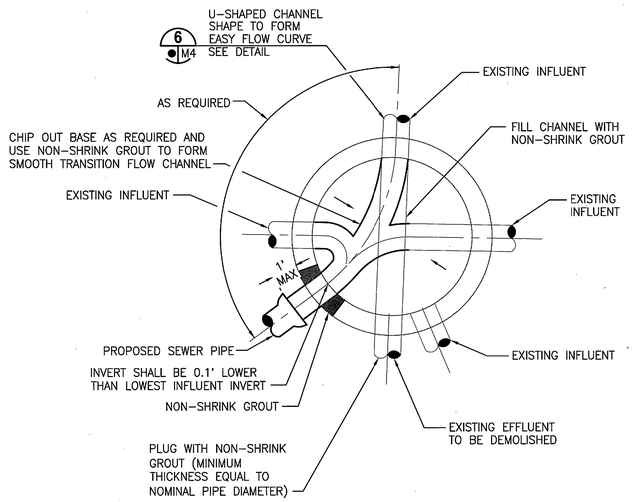

MANHOLE MODIFICATION PLAN 5/M6
NTS

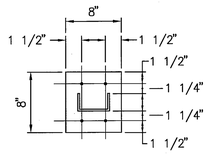

ALUMINUM BASE PLATE DETAIL

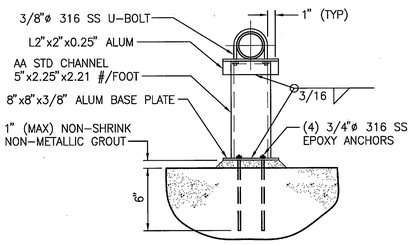

PIPE SUPPORT 2/M6
NTS

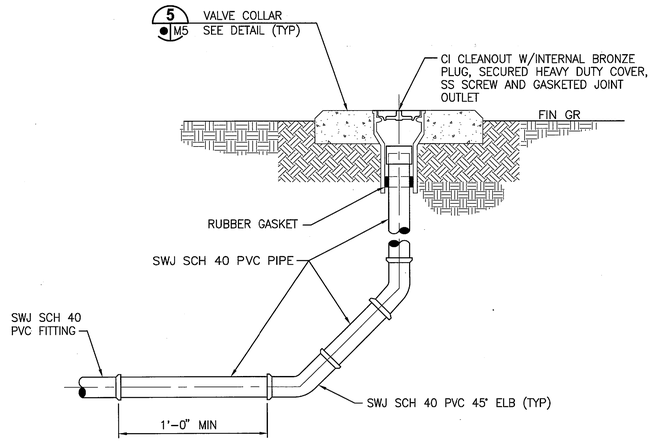

SECTION

NOTE:
SIZE OF PIPE, FITTINGS, CLEANOUT, ETC. SHALL BE AS REQUIRED FOR CONNECTION TO 4" WET WELL INFLUENT PIPING.

GRAVITY SEWER CLEANOUT DETAIL 4/M6
NTS

THIS SPACE RESERVED

SYM	ZONE	DESCRIPTION	DATE	APPROVED
A		GENERAL REVISIONS	10/31/11	km

REVISIONS

THIS DRAWING CREATED IN AUTOCAD 2010 FILE FORMAT AND WILL BE REVISED ONLY ON AN AUTOCAD SYSTEM. FILE: 14000189-M06.DWG

JONES EDMUNDS
730 NE WALDO ROAD, GAINESVILLE, FLORIDA 32641 / (352) 377-5821
3910 S WASHINGTON AVE, SUITE 210, TITUSVILLE, FLORIDA 32780 / (321) 269-2950

SIGNATURES	DATE
DRAWN P. UPSTILL	10/31/11
CHECKED M. CLARK	10/31/11
SUBMITTED R. BEST	10/31/11
ST of LICENSURE: FL LICENSE NO: 69875	
APPROVED M. CLARK	10/31/11
K. MILLER	11/2/11

NATIONAL AERONAUTICS AND SPACE ADMINISTRATION
JOHN F. KENNEDY SPACE CENTER, NASA
KENNEDY SPACE CENTER, FLORIDA

REVITALIZE WATER & WASTEWATER SYSTEMS - KARS PARK I

MECHANICAL DETAILS

FILE NO.	SIZE	DWG. NO.	REV
	F	79K38879	A
PROJ. NO. 96968.3		SHEET 40	

M6

NOTICE: When Government drawings, specifications, or other data are used for any purpose other than in connection with a definitely related Government procurement operation, the United States Government thereby incurs no responsibility nor obligation whatsoever; and the fact that the Government may have formulated, furnished, or in any way supplied the said drawings, specifications or other data is not to be regarded by implication or otherwise as in any manner licensing the holder or any other person or corporation, or conveying any rights or permission to manufacture, use, or sell any patented invention that may in any way be related thereto.

PLANS LEGEND

SYMBOL	DESCRIPTION
	CONDUIT, CAP OR STUB-OUT
	CONDUIT, UP (MULTIPLE OR SINGLE)
	CONDUIT, DOWN (MULTIPLE OR SINGLE)
	CONDUIT, CONCEALED ABOVE CEILING
	CONDUIT, EXPOSED
	CONDUIT, IN FLOOR OR UNDERGROUND
	MULTIPLE CONDUIT RUN (UNDERGROUND UNLESS OTHERWISE INDICATED)
—E—	EXISTING UNDERGROUND ELECTRIC
—C—	EXISTING UNDERGROUND COMMUNICATIONS WIRING
	INSTRUMENT, DESIGNATION AS INDICATED
M	MOTOR, HORSEPOWER INDICATED
	GROUND ROD, 3/4"x20'-0" COPPER CLAD
PB	ELECTRIC PULLBOX, NUMBER INDICATED
	DISCONNECT/SAFETY SWITCH, NEMA 4X SS, 3P UNLESS OTHERWISE NOTED, WITH 2 FORM "C" AUXILIARY CONTACTS, F=FUSED
	POLE MOUNTED LIGHT

ONE LINE DIAGRAM LEGEND

SYMBOL	DESCRIPTION
	AUTOMATIC TRANSFER SWITCH, AMPS AND POLES INDICATED
	HEAVY DUTY SAFETY SWITCH (FUSED IF INDICATED)
	DOUBLE THROW SAFETY SWITCH (FUSED IF INDICATED)
E	ELAPSED TIME METER
	EQUIPMENT OUTLINE
	FUSE
FIT-100	INSTRUMENT, DESIGNATION AS INDICATED
	SELECTOR SWITCH HAND OFF AUTOMATIC (HOA) ON-OFF (O-O) ON OFF REMOTE (OOR) VFD/BYPASS (V-B)
D	TIME DELAY RELAY (0-180 SEC)
P	PHASE MONITOR RELAY
	GROUND
PM	POWER MONITOR
M	MOTOR, HORSEPOWER INDICATED
	MOTOR CIRCUIT PROTECTOR (MCP) OR CIRCUIT BREAKER (TRIP AMPS INDICATED.) 3 POLE UNLESS OTHERWISE INDICATED
H	MOTOR SPACE HEATER
	MOTOR STARTER, COMBINATION WITH MCP FVNR= FULL VOLTAGE NON-REVERSING RVAT= REDUCED VOLTAGE AUTO-XFMR SSRV= SOLID STATE REDUCED VOLTAGE
CPT	TRANSFORMER, CONTROL POWER
	TRANSFORMER, POTENTIAL
	TRANSFORMER, POWER
SPD	SURGE PROTECTIVE DEVICE
T	TRANSFORMER, PAD MTD
	ULTRASONIC LEVEL TRANSMITTER
	GFCI DUPLEX RECEPTACLE
	ALARM HORN
R	ALARM STROBE
IC	ISOLATION CONTACTOR
BYP	BYPASS CONTACTOR

GENERAL LEGEND

SYMBOL	DESCRIPTION
#	CONDUIT RUN, SEE LIFT STATION DATA TABLE ON SHEET E3
MCC-1	CIRCUIT REFERENCE, SEE LIFT STATION DATA TABLE ON SHEET E3
#	FLAG NOTE CALLOUT
	ON EQUIPMENT, INDICATES REMOVAL
	EQUIPMENT TO BE REMOVED
	EQUIPMENT TO BE RELOCATED

THESE ARE STANDARD LEGEND SHEETS. SOME SYMBOLS MAY APPEAR ON THE LEGEND AND NOT ON THE DRAWINGS.

IN GENERAL, LIGHT LINES INDICATE EXISTING OR WORK OF OTHER TRADES, BOLD LINES INDICATE NEW ELECTRICAL WORK.

THIS SPACE RESERVED

SYM	ZONE	DESCRIPTION	DATE	APPROVED
A		GENERAL REVISIONS	10/31/11	

REVISIONS

THIS DRAWING CREATED IN AUTOCAD 2010 FILE FORMAT AND WILL BE REVISED ONLY ON AN AUTOCAD SYSTEM. FILE: 14000189-E01.DWG

JONES EDMUNDS
730 NE WALDO ROAD, GAINESVILLE, FLORIDA 32641 / (352) 377-5821
3910 S WASHINGTON AVE, SUITE 210, TITUSVILLE, FLORIDA 32780 / (321) 269-2950

SIGNATURES	DATE
DRAWN L MILLER	10/31/11
CHECKED M KOROS	10/31/11
SUBMITTED M. CLARK	10/31/11
ST of LICENSURE: FL LICENSE NO: 48898	
APPROVED M. CLARK	10/31/11
D. TRANG	11/1/11

NATIONAL AERONAUTICS AND SPACE ADMINISTRATION
JOHN F. KENNEDY SPACE CENTER, NASA
KENNEDY SPACE CENTER, FLORIDA

REVITALIZE WATER & WASTEWATER SYSTEMS - KARS PARK I

ELECTRICAL LEGENDS

FILE NO.	SIZE	DWG. NO.	REV
	F	79K38879	A

PROJ. NO. 96968.3 SHEET 41

E1

NOTICE: When Government drawings, specifications, or other data are used for any purpose other than in connection with a definitely related Government procurement operation, the United States Government thereby incurs no responsibility nor obligation whatsoever; and the fact that the Government may have formulated, furnished, or in any way supplied the said drawings, specifications or other data is not to be regarded by implication or otherwise as in any manner licensing the holder or any other person or corporation, or conveying any rights or permission to manufacture, use, or sell any patented invention that may in any way be related thereto.

GENERAL ELECTRICAL NOTES

1. EXPLOSION–PROOF JUNCTION BOX, SEE DETAIL 2/E8
2. 6" THICK CONCRETE SLAB W/ 2.1x2.1 WWF.
3. PROVIDE CONTROL PANEL AND LEVEL FLOATS AS SPECIFIED IN SECTION 33 32 13.13 AND THE INSTRUMENTATION DRAWINGS. INSTALL CONTROL PANEL IN LOCATION INDICATED. THE EXISTING CONTROL PANEL SHALL REMAIN IN SERVICE UNTIL REPLACEMENT CONTROL PANEL AND PUMPS ARE INSTALLED AND FULLY OPERATIONAL. SEE DETAIL 1/E8 FOR CONTROL PANEL INSTALLATION.
4. TO SOURCE PANEL. SEE LIFT STATION DATA TABLE ON SHEET E3 FOR PANEL LOCATION AND CIRCUIT INFORMATION.
5. H20 TRAFFIC RATED PULLBOX.
6. GENERATOR RECEPTACLE.
7. CONDUIT SEAL.
8. REFER TO LIFT STATION DATA TABLE ON SHEET E3 FOR CONDUIT, WIRING, CIRCUIT BREAKER, AND PUMP SIZES.
9. NEMA 4X HEAVY DUTY SAFETY SWITCH.
10. REMOTE TELEMETRY UNIT. SEE I3 FOR INSTALLATION DETAILS. 2/I4
11. NETWORK INTERFACE PANEL. SEE DETAIL 1/I4

12. ALL WORK SHALL CONFORM TO THE LATEST ADOPTED EDITION OF THE NATIONAL ELECTRICAL CODE (NEC). GROUND ALL ELECTRICAL EQUIPMENT AND ENCLOSURES IN ACCORDANCE WITH THE NEC.

13. THE CONTRACT DOCUMENTS MAY NOT REFLECT ALL EXISTING UTILITIES OR SHOW THEM IN THEIR EXACT LOCATIONS. THE CONTRACTOR SHALL HAVE UTILITY LOCATES PERFORMED BEFORE BEGINNING EXCAVATION. THE CONTRACTOR SHALL HAND DIG AND VERIFY ALL EXISTING UTILITIES. THE CONTRACTOR SHALL REPAIR, AT CONTRACTOR EXPENSE, ANY SERVICE THAT IS INTERRUPTED BY THE CONTRACTOR WHETHER SHOWN OR NOT SHOWN ON THE CONTRACT DOCUMENTS. ALL REPAIRS SHALL BE APPROVED BY THE CO.

14. BEFORE BEGINNING WORK, ALL ELECTRICAL EQUIPMENT AND SYSTEMS SHALL BE OPERATED IN THE PRESENCE OF REPRESENTATIVES OF THE CONTRACTOR AND THE CO IN ORDER TO ESTABLISH THAT ALL SYSTEMS ARE IN PROPER WORKING ORDER AT THE START OF THE PROJECT. UPON COMPLETION OF THE ABOVE TEST, THE CONTRACTOR SHALL SUBMIT A DETAILED LISTING INDICATING ANY ITEMS NOTED WHICH ARE NOT IN FULLY OPERATIONAL CONDITION. THIS LISTING SHALL BE SIGNED BY ALL PARTIES PRESENT AT THE TEST. COMMENCEMENT OF WORK BEFORE THE ABOVE SHALL CONSTITUTE ACCEPTANCE OF ALL SYSTEMS BY THE CONTRACTOR IN FULLY OPERATIONAL CONDITION. THE CONTRACTOR SHALL HAVE ALL ELECTRICAL SYSTEMS BACK IN WORKING ORDER BEFORE SUBSTANTIAL COMPLETION OF THE PROJECT.

15. THE CONTRACTOR SHALL COORDINATE PHASING OF ALL WORK IN ACCORDANCE WITH WORK SEQUENCE AS OUTLINED IN THE PROJECT SPECIFICATIONS AND AS NECESSARY FOR CONTINUITY OF LIFT STATION OPERATIONS. THE CONTRACTOR SHALL PROVIDE TEMPORARY POWER AS REQUIRED TO MAINTAIN OPERATIONS OR POWER TEMPORARY EQUIPMENT.

16. THE CONTRACTOR SHALL COORDINATE NEW CONDUIT AND/OR DUCT RUNS WITH OTHER UTILITIES, FOR FACILITIES AND PIPING RUNS. PROVIDE 6" CLEARANCE AT PIPE CROSSINGS.

17. THE CONTRACTOR SHALL PROVIDE RECORD DRAWINGS OF ALL SYSTEMS INCLUDING ROUTING OF INSTRUMENTATION CIRCUITS AND HOME RUNS.

18. THESE DRAWINGS ARE INTENDED TO SHOW THE GENERAL ARRANGEMENT OF EQUIPMENT ONLY AND MAY NOT INDICATE EVERY OFFSET, BEND, FITTING OR MODIFICATION OF MATERIALS REQUIRED FOR INSTALLATION. THE EXACT EQUIPMENT SIZE, CONFIGURATION, AND ELECTRICAL POINTS OF CONNECTION TO EQUIPMENT VARY BY MANUFACTURER. THE CONTRACTOR SHALL COORDINATE THE FINAL CONFIGURATION OF EQUIPMENT. THE CONTRACTOR SHALL SUBMIT EQUIPMENT COORDINATION DRAWINGS INDICATING THE ACTUAL SIZE AND CONFIGURATION OF PROPOSED EQUIPMENT DRAWN TO SCALE INCLUDING THE MANUFACTURER'S RECOMMENDED MAINTENANCE SERVICE AREAS AND MECHANICAL AND ELECTRICAL INTERFACE REQUIREMENTS INCLUDING ELECTRICAL CONNECTIONS AT THE TIME OF EQUIPMENT SHOP DRAWING SUBMITTAL.

19. ALL OUTDOOR ANALOG SIGNAL CONDUITS SHALL BE PVC COATED RIGID GALVANIZED STEEL ABOVE AND BELOW GRADE. AT ALL LIFT STATIONS, ALL CONDUITS BETWEEN LIFT STATION CONTROL PANELS AND EXPLOSION PROOF JUNCTION BOXES AND BETWEEN EXPLOSION PROOF JUNCTION BOXES AND WETWELLS SHALL BE PVC COATED RIGID GALVANIZED STEEL ABOVE AND BELOW GRADE. ALL OTHER OUTDOOR CONDUITS SHALL BE PVC COATED RIGID GALVANIZED STEEL ABOVE GRADE AND SCHEDULE 40 PVC BELOW GRADE UNLESS INDICATED OTHERWISE. ALL FITTINGS AND MOUNTING HARDWARE FOR PVC COATED RGS CONDUIT SHALL BE PVC COATED. REFER TO SECTION 26 05 00.00 40 AND SECTION 33 71 02.00 20 FOR ADDITIONAL REQUIREMENTS. INDOOR CONDUITS SHALL BE RIGID GALVANIZED STEEL. TRANSITIONS FROM PVC TO RGS CONDUIT SHALL BE BELOW THE FIRST ELBOW. THE PORTION OF RGS CONDUIT TRANSITIONS THAT ARE BELOW FINISHED FLOOR SHALL BE PVC COATED. PVC CONDUIT SHALL BE SUNLIGHT RESISTANT, RATED FOR 90°C CONDUCTORS. FLEXIBLE CONDUIT, IF REQUIRED, SHALL BE CARLON "CARFLEX" OR EQUAL.

20. SPLICES IN PULLBOXES SHALL BE PERMISSIBLE ONLY WHERE INDICATED IN THE CONTRACT DRAWINGS, OR AS APPROVED BY THE CO. SPLICES SHALL BE WATERPROOF, LISTED FOR THE APPLICATION, AND INSTALLED IN ACCORDANCE WITH SPLICE AND CABLE OR WIRING MANUFACTURER.

21. ALL MOUNTING HARDWARE, ANCHORS, CHANNEL, PLATES, BRACKETS, FLOAT SUSPENSION CABLES, CABLE HANGERS AND ENCLOSURES SHALL BE STAINLESS STEEL UNLESS OTHERWISE INDICATED.

22. CONDUCTORS WITHIN CONTROL PANEL SHALL BE TYPE MTW. VFD WIRING SHALL BE TYPE XHHW–2 OR LISTED VFD CABLE. ALL OTHER CONDUCTORS SHALL BE ANNEALED SOFT DRAWN COPPER WITH TYPE THWN/THHN INSULATION RATED FOR 600 VOLTS.

23. INSTRUMENTATION CIRCUITS IN CONDUITS SHALL BE SEPARATED BY 6" MINIMUM WHERE RUNNING IN PARALLEL WITH POWER CIRCUIT CONDUITS.

24. ALL CONDUITS SHALL HAVE A SEPARATE GREEN GROUND CONDUCTOR INSTALLED FOR GROUNDING.

25. ALL DISCONNECT SWITCHES SHALL BE HEAVY DUTY TYPE.

26. ALL ELECTRICAL EQUIPMENT ENCLOSURES LOCATED OUTSIDE SHALL BE NEMA 4X–SS UNLESS OTHERWISE INDICATED.

27. ALL EMPTY CONDUITS SHALL CONTAIN 200 LB PULL–LINE. ALL SPARE CONDUITS SHALL BE CAPPED ON EACH END AND LABELED TO IDENTIFY SOURCE OF EACH END.

28. ALL CONDUCTORS AND CABLES USED IN OUTDOOR OR UNDERGROUND LOCATIONS SHALL BE SUITABLE FOR USE IN WET LOCATIONS.

29. COORDINATE THE ROUTING OF INDOOR CONDUITS WITH THE CO.

30. TWISTED SHIELDED PAIRED CONDUITS AND CABLES TO BE TERMINATED BY OTHERS AT KCCS CONNECTION. PROVIDE 50' SPARE TWISTED SHIELDED PAIRED CABLE COILED UP INSIDE OF COMMUNICATIONS ROOM. IF KCCS CONNECTION POINT IS NOT LOCATED INSIDE OF A BUILDING, PROVIDE 50' SPARE TWISTED SHIELDED PAIRED CABLE COILED UP INSIDE OF TTC PANEL. PROVIDE CLEAR LABELING OF ALL CONDUCTORS IDENTIFYING SOURCE TO ALLOW PROPER TERMINATING BY OTHERS.

ABBREVIATIONS

A	AMPERE, AUTOMATIC
AC	ALTERNATING CURRENT
AFF	ABOVE FINISHED FLOOR
AFG	ABOVE FINISHED GRADE
AMP	AMPERE
ATS	AUTOMATIC TRANSFER SWITCH
AUTO	AUTOMATIC
AUX	AUXILIARY
AWG	AMERICAN WIRE GAGE
BC	BARE COPPER
BKR	BREAKER
C	CONDUIT, CONTACTOR, CONDUCTOR, CLOSE
CB	CIRCUIT BREAKER
CFWE	CABLE FURNISHED WITH EQUIPMENT
CO	CONTRACTING OFFICER
CPT	CONTROL POWER TRANSFORMER
CRE	CORROSION RESISTANT
CT	CURRENT TRANSFORMER, CABLE TRAY
DC	DIRECT CURRENT
DIV	DIVISION
DS	DISCONNECT SWITCH
EP	EXPLOSION–PROOF
FDR	FEEDER
F,FU	FUSE
FLEX	FLEXIBLE CONDUIT
FO	FIBER OPTIC
FREQ	FREQUENCY
FVNR	FULL VOLTAGE NON–REVERSING
FVR	FULL VOLTAGE REVERSING
G	GROUND
GALV	GALVANIZED
GEN	GENERATOR
GFCI	GROUND FAULT CIRCUIT INTERRUPTER
GND	GROUND
HP	HORSEPOWER
HPS	HIGH PRESSURE SODIUM
HOA	HAND OFF AUTOMATIC
IC	INTERRUPTING CAPACITY
IEEE	INSTITUTE OF ELECTRICAL AND ELECTRONIC ENGINEERS
I&C	INSTRUMENTATION AND CONTROL
J,JB	JUNCTION BOX
K	KEY INTERLOCK
KA	KILOAMPERES
KCCS	KENNEDY COMPLEX CONTROL SYSTEM
KCMIL	THOUSAND CIRCULAR MILS
KV	KILOVOLT
KVA	KILOVOLT AMPERES
KW	KILOWATTS
KWH	KILOWATT HOUR
L	LIGHTING CONTACTOR, LOW SPEED, LOWER
LB	POUND
LT	LIQUID–TIGHT
FLEX	FLEX CONDUIT
M	MAGNETIC CONTACTOR COIL, MOTOR, MANUAL
MCC	MOTOR CONTROL CENTER
MH	MANHOLE, METAL HALIDE, MOUNTING HEIGHT
MO	MOTOR OPERATOR
MS	MOTOR STARTER
MSC	MISCELLANEOUS
MT,MTD	MOUNT, MOUNTED
MV	MEDIUM VOLTAGE
N	NEUTRAL, NORMAL
NA	NON–AUTOMATIC
NC	NORMALLY CLOSED
NEC	NATIONAL ELECTRICAL CODE
NEMA	NATIONAL ELECTRICAL MANUFACTURERS ASSOCIATION
NEUT	NEUTRAL
NO	NORMALLY OPEN
NTS	NOT TO SCALE
O–O	ON–OFF
OOR	ON OFF REMOTE
PB	PULL BOX
PF	POWER FACTOR
PH	PHASE
PNL	PANEL
PT	POTENTIAL TRANSFORMER
PVC	POLYVINYL CHLORIDE CONDUIT
PWR	POWER
RCPT	RECEPTACLE
RGS	RIGID GALVANIZED STEEL
RMS	ROOT MEAN SQUARE
RVAT	REDUCED VOLTAGE AUTOTRANSFORMER
RVNR	REDUCED VOLTAGE NON REVERSING
RVR	REDUCED VOLTAGE REVERSING
SA	SURGE ARRESTER
SPD	SURGE PROTECTIVE DEVICE
SS	STAINLESS STEEL
SSRV	SOLID STATE REDUCED VOLTAGE
ST	SHUNT TRIP
SV	SOLENOID VALVE
SW	SWITCH
TEL	TELEPHONE
TEMP	TEMPERATURE
TJB	TERMINAL JUNCTION BOX
TSP	TWISTED SHIELDED PAIR
UNO	UNLESS NOTED OTHERWISE
UPS	UNINTERRUPTIBLE POWER SUPPLY
V	VOLTAGE, VOLTS
VFD	VARIABLE FREQUENCY DRIVE
V–B	VFD BYPASS
W	WATT
WP	WEATHERPROOF
WWF	WELDED WIRE FABRIC
W/	WITH
XFMR	TRANSFORMER
ϕ	PHASE

THESE ARE STANDARD ABBREVIATION SHEETS. SOME ABBREVIATIONS MAY APPEAR ON THE ABBREVIATION LIST AND NOT ON THE DRAWINGS.

THIS SPACE RESERVED

SYM	ZONE	DESCRIPTION	DATE	APPROVED
A		GENERAL REVISIONS	12/05/11	KM

REVISIONS

THIS DRAWING CREATED IN AUTOCAD 2010 FILE FORMAT AND WILL BE REVISED ONLY ON AN AUTOCAD SYSTEM. FILE: 14000189–E02.DWG

JONES EDMUNDS
730 NE WALDO ROAD, GAINESVILLE, FLORIDA 32641 / (352) 377-5821
3910 S WASHINGTON AVE, SUITE 210, TITUSVILLE, FLORIDA 32780 / (321) 269-2950

SIGNATURES	DATE
DRAWN L MILLER	12/05/11
CHECKED M KOROS	12/05/11
SUBMITTED M. CLARK	12/05/11
ST of LICENSURE: FL LICENSE NO: 48898	
APPROVED M. CLARK	12/05/11
D. TRANG	12/5/11

NATIONAL AERONAUTICS AND SPACE ADMINISTRATION
JOHN F. KENNEDY SPACE CENTER, NASA
KENNEDY SPACE CENTER, FLORIDA

REVITALIZE WATER & WASTEWATER SYSTEMS - KARS PARK I

ABBREVIATIONS AND GENERAL NOTES

FILE NO.	SIZE	DWG. NO.	REV
	F	79K38879	A

PROJ. NO. 96968.3 | SHEET 42

E2

SC FORM 1–11 (3/76)(C/G 3/94)

NOTICE: When Government drawings, specifications, or other data are used for any purpose other than in connection with a definitely related Government procurement operation, the United States Government thereby incurs no responsibility nor obligation whatsoever; and the fact that the Government may have formulated, furnished, or in any way supplied the said drawings, specifications or other data is not to be regarded by implication or otherwise as in any manner licensing the holder or any other person or corporation, or conveying any rights or permission to manufacture, use, or sell any patented invention that may in any way be related thereto.

NOTES:

1. INFORMATION SHOWN ON TYPICAL DOSING STATION ONE-LINE IS PART OF SEPTIC SYSTEM PACKAGE AND IS SHOWN FOR INFORMATION ONLY.

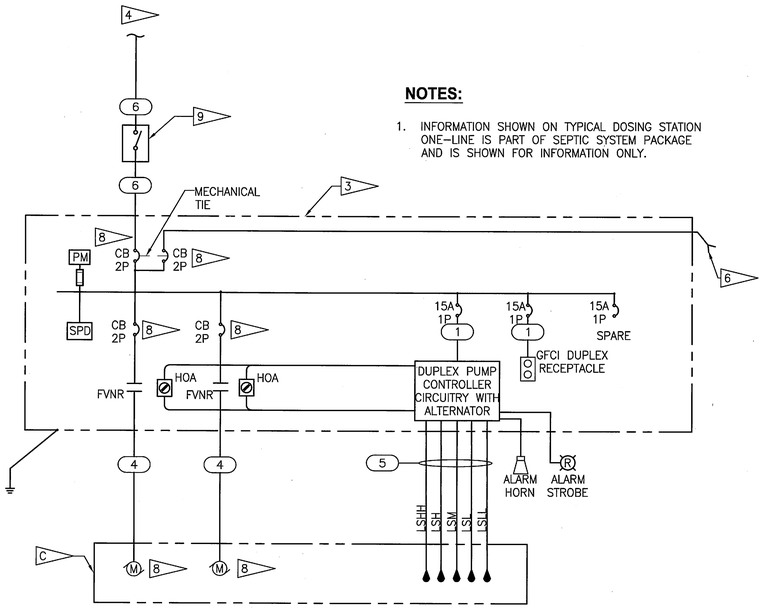

TYPICAL DOSING STATION ONE-LINE DIAGRAM

NTS

NOTES:

A. PROVIDE HARDWIRED CONNECTION TO KCCS SYSTEM AS INDICATED IN SPECIFICATIONS 33 32 13.13 AND 40 95 00 FOR LIFT STATIONS #1 AND #2 ONLY.

B. PROVIDE EITHER A ROTARY OR DIGITAL PHASE CONVERTER UPSTREAM OF THE CONTROL PANEL TO PROVIDE 3 PHASE POWER TO THE CONTROL PANEL, OR A ROTARY OR DIGITAL PHASE CONVERTER UPSTREAM OF EACH MOTOR STARTER TO PROVIDE 3 PHASE POWER TO EACH MOTOR. INSTALL ACCORDING TO MANUFACTURER RECOMMENDATION. REFER TO SECTION 33 32 13.13 SEWAGE LIFT STATIONS FOR PHASE CONVERTER REQUIREMENTS.

C. PROPOSED WET WELL.

D. CB, WIRE & CONDUIT SIZE WILL DE DETERMINED BASED UPON SELECTED TECHNIQUE FOR PHASE CONVERSION. COORDINATE WITH PUMP SUPPLIER.

LIFT STATION DATA TABLE

LIFT STATION	PUMP HP	SOURCE VOLTAGE AND PHASE	PUMP VOLTAGE AND PHASE	MAIN CB SIZE	PUMP CB SIZE	(1) CONTROL POWER WIRE SIZES	(2) MOTOR WIRE & CONDUIT SIZES FROM CONTROL PANEL TO JB	(3) FLOAT WIRE & CONDUIT SIZES FROM CONTROL PANEL TO JB	(4) MOTOR WIRE & CONDUIT SIZES FROM JB OR CONTROL PANEL TO MOTOR	(5) FLOAT WIRE & CONDUIT SIZES FROM JB OR CONTROL PANEL TO FLOATS	(6) * WIRE & CONDUIT SIZES FROM SOURCE PNL TO CONTROL PNL	(7) * KCCS WIRE & CONDUIT SIZES	SHEET No
LIFT STATION #1	15	240V, 1Φ	240V, 3Φ	D	D	2#12, 1#12(G)	3#6, 1#6(G), 1"C	18#14, 1 1/2"C. (FLOATS, ALARMS, SPARES)	CFWE, 1 1/2"C. (PUMP CABLE)	5-CFWE, 1 1/2"C. (FLOAT SWITCH CABLES)	D	6 PAIR TSP, 2"C	E4
GRINDER PUMP WASTEWATER LIFT STATION #2	2		240V, 1Φ	40A	25A		2#12, 1#12(G), 1"C		CFWE, 1 1/2"C. (PUMP CABLE)		3#6, 1#6(G), 1"C	6 PAIR TSP, 2"C	E5
GRINDER PUMP WASTEWATER LIFT STATION #3							2#12, 1#12(G), 1"C					N/A	E5
DOSING STATION #4 (INCLUDED IN SEPTIC SYSTEM PACKAGE)							N/A	N/A				N/A	E6
DOSING STATION #5 (INCLUDED IN SEPTIC SYSTEM PACKAGE)							N/A	N/A				N/A	E6

* PROVIDE 1 SPARE CONDUIT OF EQUAL SIZE TO THAT WHICH IS REQUIRED FOR THE CIRCUIT.

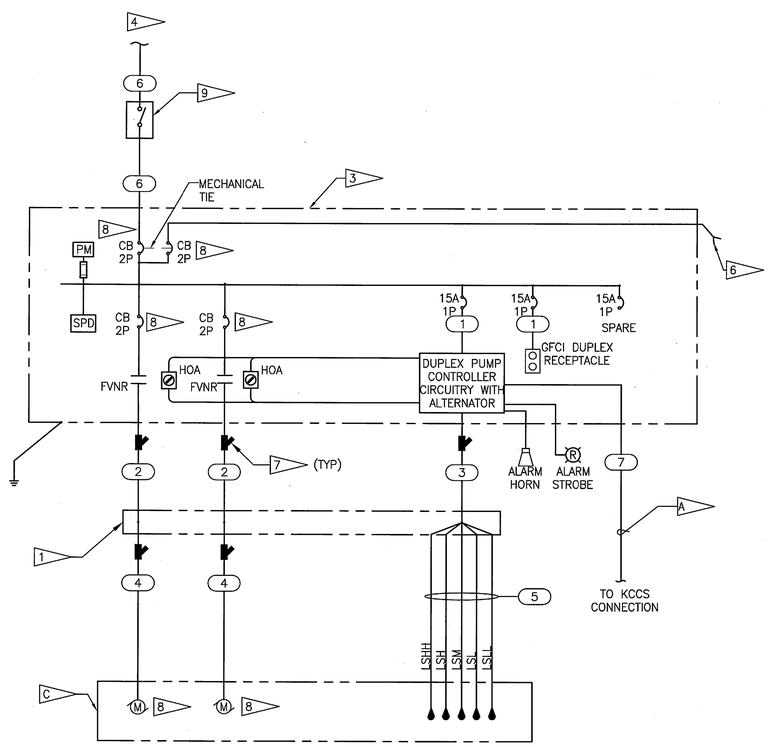

TYPICAL 240V GRINDER PUMP WASTEWATER LIFT STATION ONE-LINE DIAGRAM

NTS

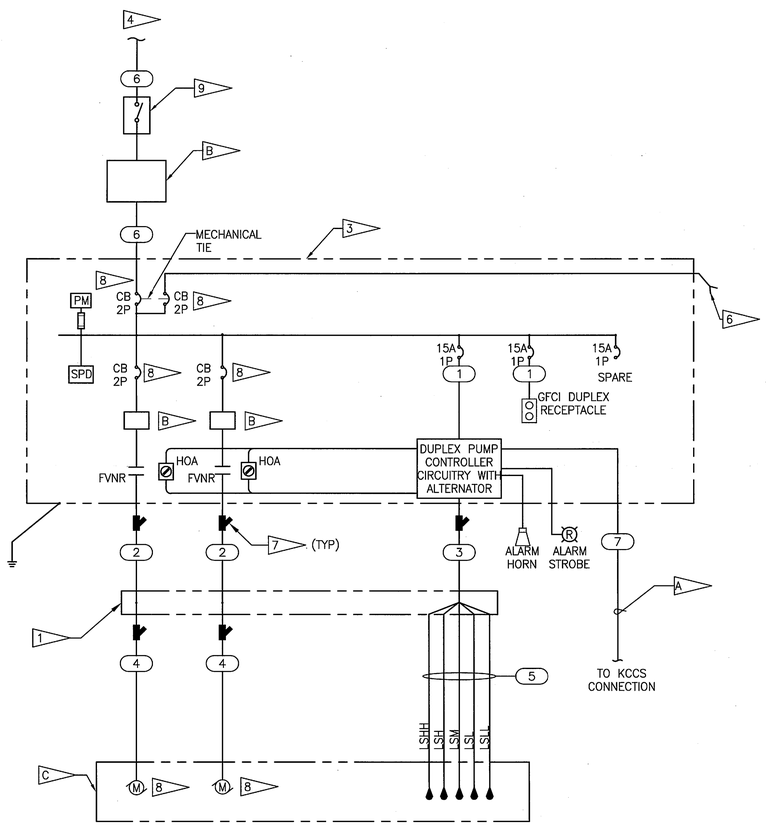

LIFT STATION #1 ONE-LINE DIAGRAM

NTS

THIS SPACE RESERVED

SYM	ZONE	DESCRIPTION	DATE	APPROVED
A		GENERAL REVISIONS	10/31/11	

REVISIONS

THIS DRAWING CREATED IN AUTOCAD 2010 FILE FORMAT AND WILL BE REVISED ONLY ON AN AUTOCAD SYSTEM. FILE: 14000189-E03.DWG

JONES EDMUNDS
730 NE WALDO ROAD, GAINESVILLE, FLORIDA 32641 / (352) 377-5821
3910 S WASHINGTON AVE, SUITE 210, TITUSVILLE, FLORIDA 32780 / (321) 269-2950

SIGNATURES	DATE
DRAWN L MILLER	10/31/11
CHECKED M KOROS	10/31/11
SUBMITTED M. CLARK	10/31/11
ST of LICENSURE: FL LICENSE NO: 48898	
APPROVED M. CLARK	10/31/11
D. TRANG	11/1/11

NATIONAL AERONAUTICS AND SPACE ADMINISTRATION
JOHN F. KENNEDY SPACE CENTER, NASA
KENNEDY SPACE CENTER, FLORIDA

REVITALIZE WATER & WASTEWATER SYSTEMS - KARS PARK I

ONE-LINE DIAGRAMS AND LIFT STATION DATA TABLE

FILE NO.	SIZE	DWG. NO.	REV
	F	79K38879	A

PROJ. NO. 96968.3 | SHEET 43

E3

03/25/04

NOTICE: When Government drawings, specifications, or other data are used for any purpose other than in connection with a definitely related Government procurement operation, the United States Government thereby incurs no responsibility nor obligation whatsoever; and the fact that the Government may have formulated, furnished, or in any way supplied the said drawings, specifications or other data is not to be regarded by implication or otherwise as in any manner licensing the holder or any other person or corporation, or conveying any rights or permission to manufacture, use, or sell any patented invention that may in any way be related thereto.

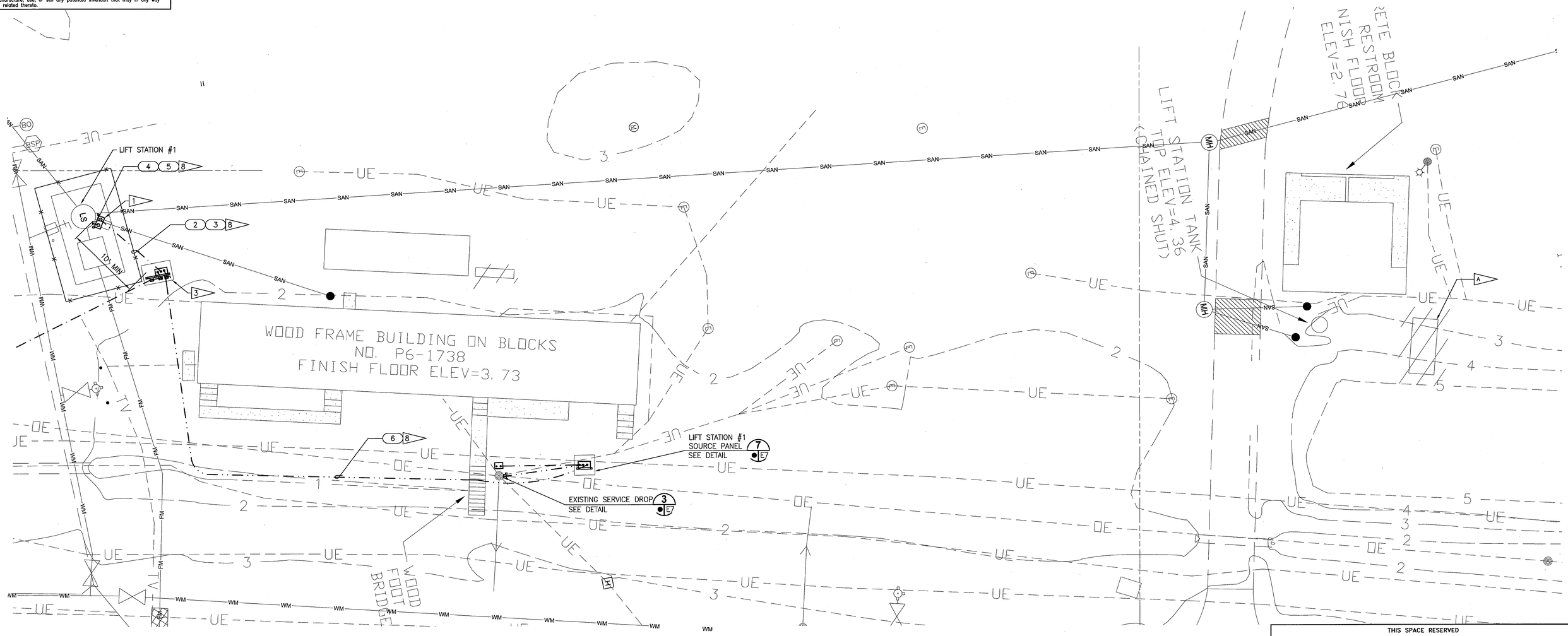

LIFT STATION #1 ELECTRICAL PLAN

1"=10'

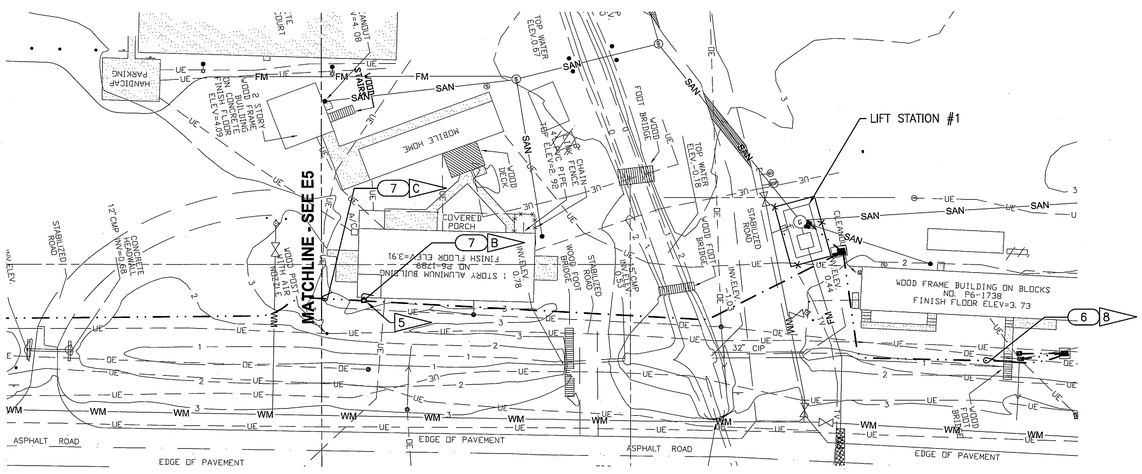

KCCS CONNECTION FOR LIFT STATION #1

1"=30'

NOTES:

A. REMOVE EXISTING ELECTRIC CIRCUIT FOR PUMP BACK TO PANEL.

B. KCCS CONNECTION FROM LIFT STATION #1 RTU TO NETWORK LOCATED ON RACK 001 IN COMMUNICATIONS ROOM OF ALUMINUM BLDG.

C. KCCS CONNECTION FROM LIFT STATION #2 TO LIFT STATION #1 RTU.

GRAPHIC SCALE
0 25 50 100
SCALE IN FEET
1"=50'

GRAPHIC SCALE
0 5 10 20
SCALE IN FEET
1"=10'

E4

THIS SPACE RESERVED

SYM	ZONE	DESCRIPTION	DATE	APPROVED
A		GENERAL REVISIONS	10/31/11	

REVISIONS

THIS DRAWING CREATED IN AUTOCAD 2010 FILE FORMAT AND WILL BE REVISED ONLY ON AN AUTOCAD SYSTEM. FILE: 14000189-E04.DWG

JONES EDMUNDS
730 NE WALDO ROAD, GAINESVILLE, FLORIDA 32641 / (352) 377-5821
3910 S WASHINGTON AVE, SUITE 210, TITUSVILLE, FLORIDA 32780 / (321) 269-2950

SIGNATURES	DATE
DRAWN L MILLER	10/31/11
CHECKED M KOROS	10/31/11
SUBMITTED M. CLARK	10/31/11
ST of LICENSURE: FL LICENSE NO: 48898	
APPROVED M. CLARK	10/31/11
D. TRANG	11/1/11

NATIONAL AERONAUTICS AND SPACE ADMINISTRATION
JOHN F. KENNEDY SPACE CENTER, NASA
KENNEDY SPACE CENTER, FLORIDA

REVITALIZE WATER & WASTEWATER SYSTEMS - KARS PARK I

LIFT STATION #1 ELECTRICAL AND KCCS CONNECTION PLAN

FILE NO.	SIZE	DWG. NO.	REV
	F	79K38879	A

PROJ. NO. 96968.3 SHEET 44

NOTICE: When Government drawings, specifications, or other data are used for any purpose other than in connection with a definitely related Government procurement operation, the United States Government thereby incurs no responsibility nor obligation whatsoever; and the fact that the Government may have formulated, furnished, or in any way supplied the said drawings, specifications or other data is not to be regarded by implication or otherwise as in any manner licensing the holder or any other person or corporation, or conveying any rights or permission to manufacture, use, or sell any patented invention that may in any way be related thereto.

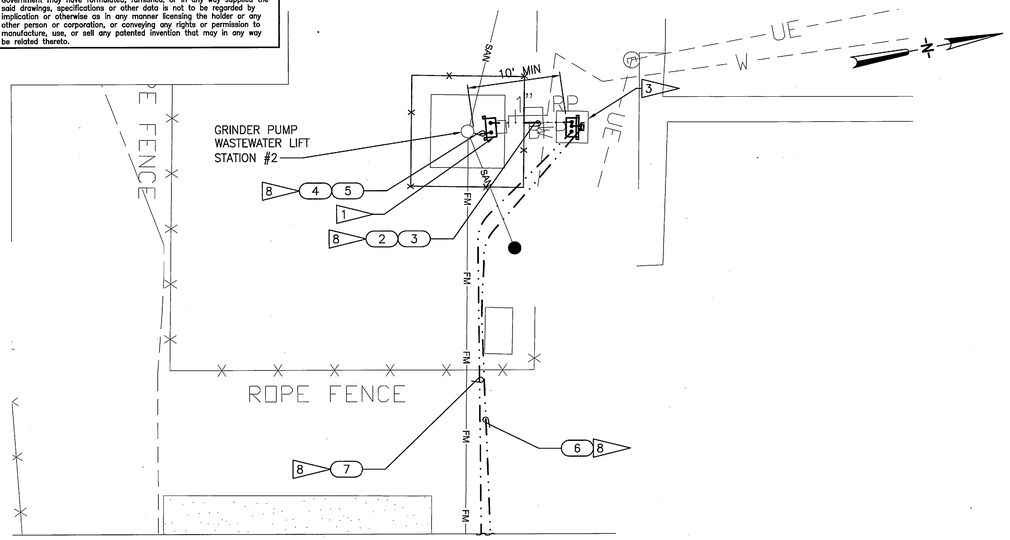

GRINDER PUMP WASTEWATER LIFT STATION #2 ENLARGED ELECTRICAL PLAN

1"=10'

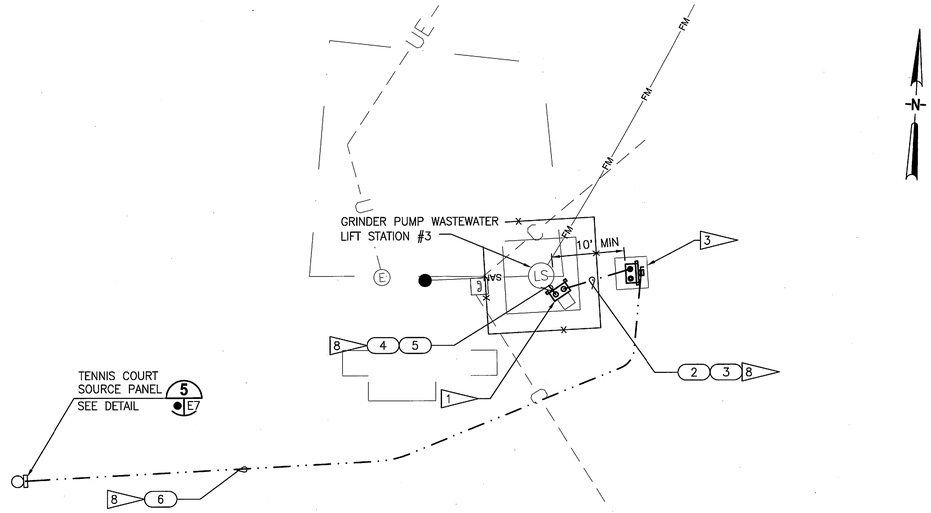

GRINDER PUMP WASTEWATER LIFT STATION #3 ELECTRICAL PLAN

1"=20'

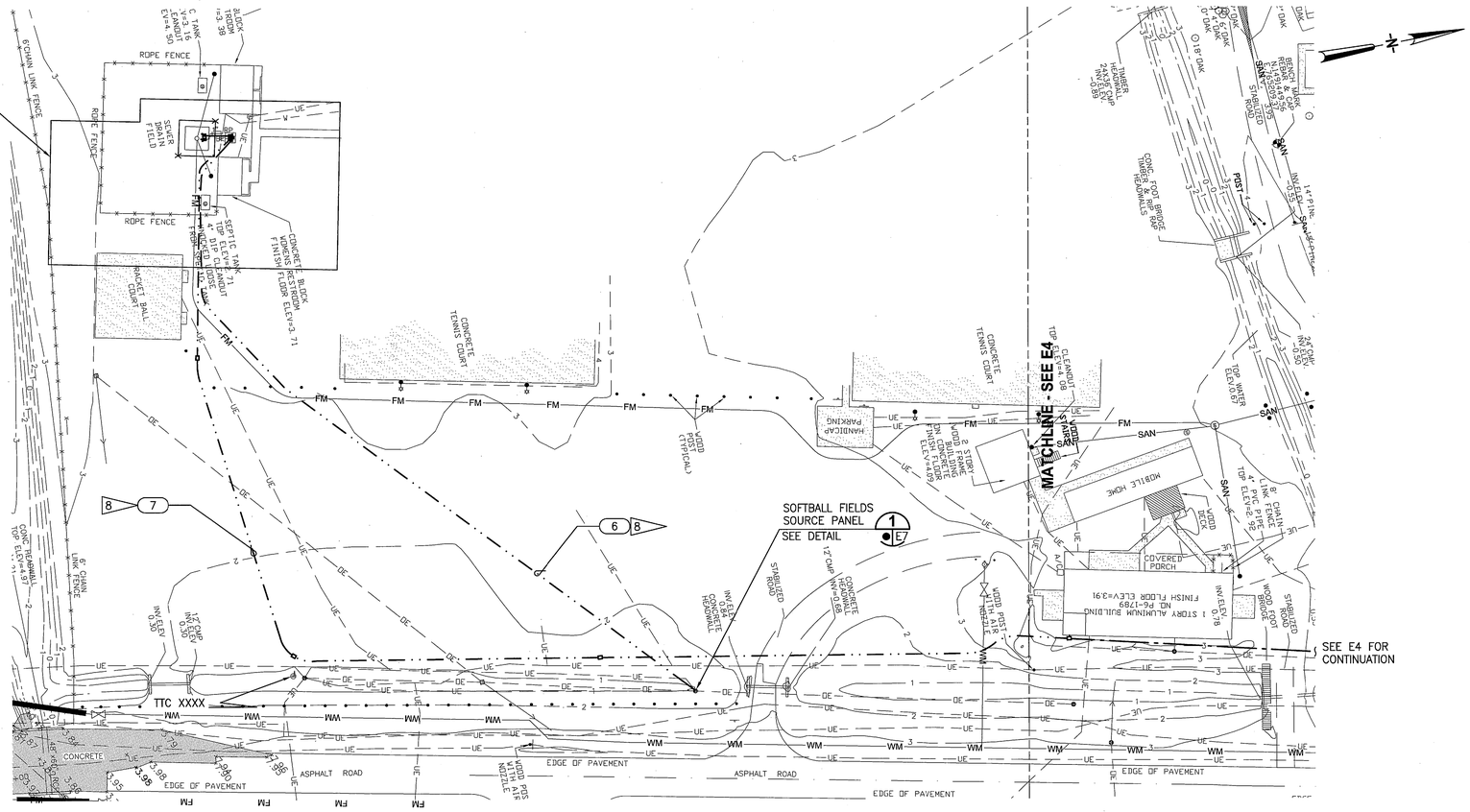

KCCS CONNECTION FOR GRINDER PUMP WASTEWATER LIFT STATION #2

1"=30'

GRAPHIC SCALE 0 5 10 20 — SCALE IN FEET 1"=10'

GRAPHIC SCALE 0 10 20 40 — SCALE IN FEET 1"=20'

GRAPHIC SCALE 0 15 30 60 — SCALE IN FEET 1"=30'

THIS SPACE RESERVED

SYM	ZONE	DESCRIPTION	DATE	APPROVED
A		GENERAL REVISIONS	10/31/11	

REVISIONS

THIS DRAWING CREATED IN AUTOCAD 2010 FILE FORMAT AND WILL BE REVISED ONLY ON AN AUTOCAD SYSTEM. FILE: 14000189-E05.DWG

JONES EDMUNDS

730 NE WALDO ROAD, GAINESVILLE, FLORIDA 32641 / (352) 377-5821
3910 S WASHINGTON AVE, SUITE 210, TITUSVILLE, FLORIDA 32780 / (321) 269-2950

SIGNATURES	DATE
DRAWN L MILLER	10/31/11
CHECKED M KOROS	10/31/11
SUBMITTED M. CLARK	10/31/11
ST of LICENSURE: FL LICENSE NO: 48898	
APPROVED M. CLARK	10/31/11
D. TRANG	11/1/11

NATIONAL AERONAUTICS AND SPACE ADMINISTRATION
JOHN F. KENNEDY SPACE CENTER, NASA
KENNEDY SPACE CENTER, FLORIDA

REVITALIZE WATER & WASTEWATER SYSTEMS - KARS PARK I

GRINDER PUMP WASTEWATER LIFT STATION ELECTRICAL PLANS

FILE NO.	SIZE	DWG. NO.	REV
	F	79K38879	A

PROJ. NO. 96968.3 SHEET 45

E5

NOTICE: When Government drawings, specifications, or other data are used for any purpose other than in connection with a definitely related Government procurement operation, the United States Government thereby incurs no responsibility nor obligation whatsoever; and the fact that the Government may have formulated, furnished, or in any way supplied the said drawings, specifications or other data is not to be regarded by implication or otherwise as in any manner licensing the holder or any other person or corporation, or conveying any rights or permission to manufacture, use, or sell any patented invention that may in any way be related thereto.

NOTES:

A DOSING STATION CONTROL PANEL EQUIPMENT RACK IS PART OF SEPTIC SYSTEM PACKAGE.

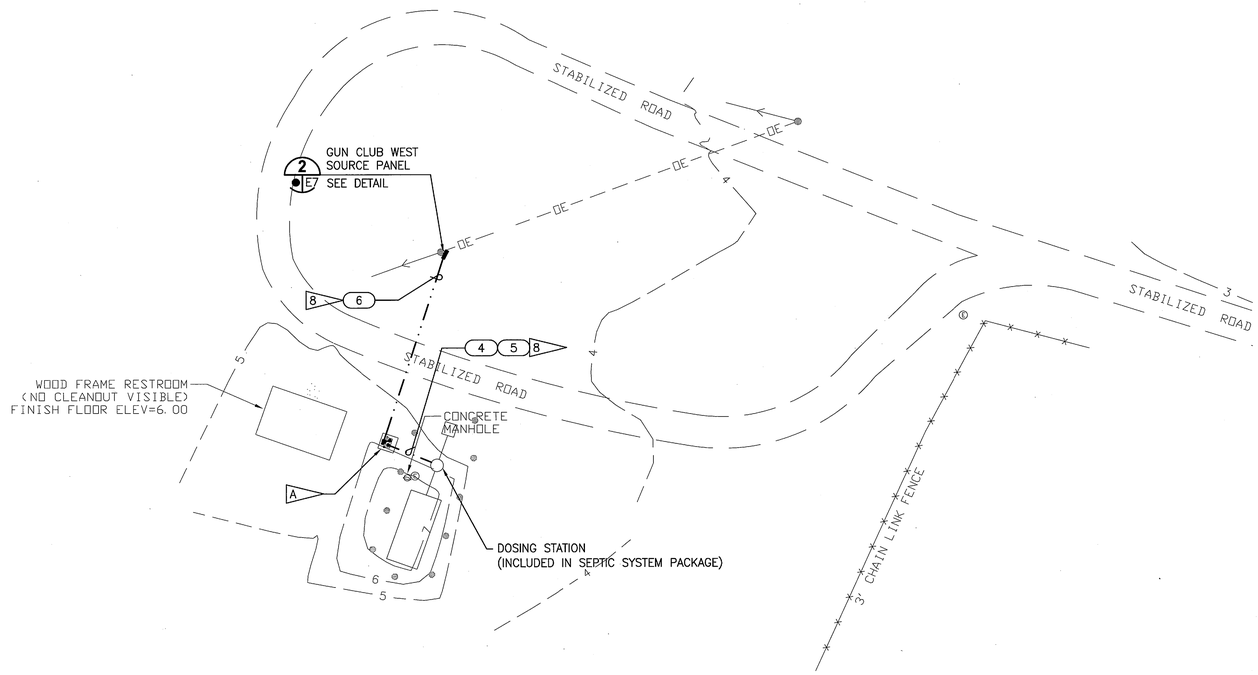

WEST GUN CLUB SITE PLAN

1"=20'

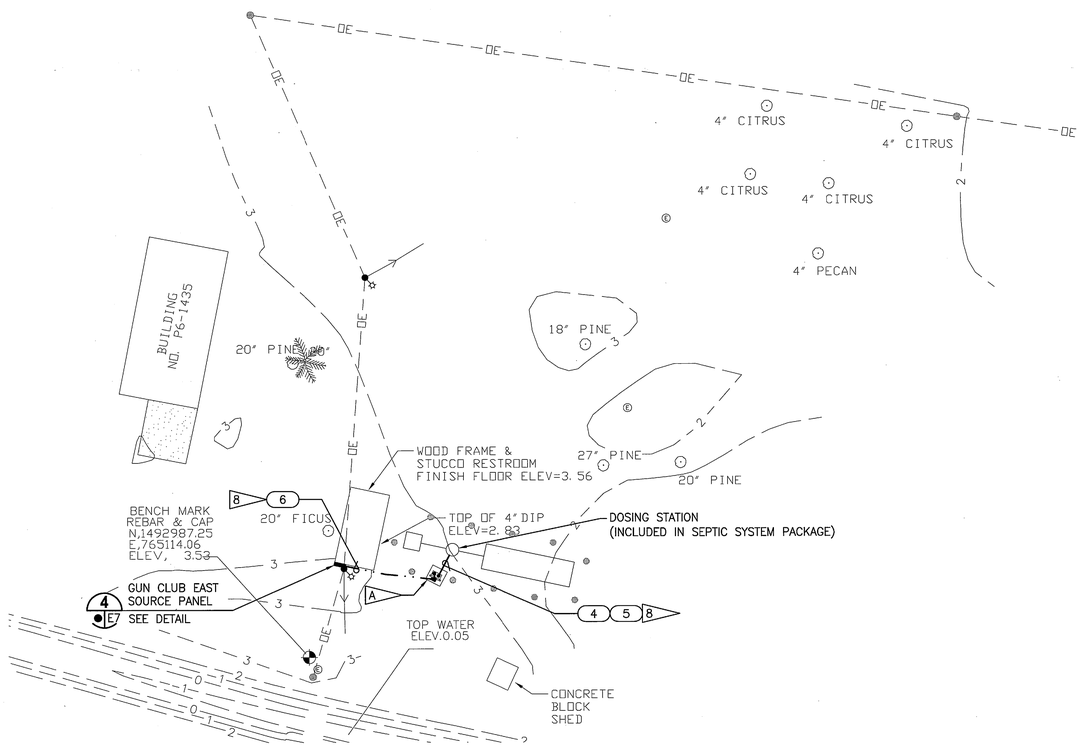

EAST GUN CLUB SITE PLAN

1"=20'

GRAPHIC SCALE 0 10 20 40 — SCALE IN FEET 1"=20'

GRAPHIC SCALE 0 10 20 40 — SCALE IN FEET 1"=20'

N

E6

THIS SPACE RESERVED

SYM	ZONE	DESCRIPTION	DATE	APPROVED
A		GENERAL REVISIONS	10/31/11	

REVISIONS

THIS DRAWING CREATED IN AUTOCAD 2010 FILE FORMAT AND WILL BE REVISED ONLY ON AN AUTOCAD SYSTEM. FILE: 14000189-E06.DWG

JONES EDMUNDS

730 NE WALDO ROAD, GAINESVILLE, FLORIDA 32641 / (352) 377-5821
3910 S WASHINGTON AVE, SUITE 210, TITUSVILLE, FLORIDA 32780 / (321) 269-2950

SIGNATURES	DATE
DRAWN L MILLER	10/31/11
CHECKED M KOROS	10/31/11
SUBMITTED M. CLARK	10/31/11
ST of LICENSURE: FL LICENSE NO: 48898	
APPROVED M. CLARK	10/31/11
D. TRANG	11/1/11

NATIONAL AERONAUTICS AND SPACE ADMINISTRATION
JOHN F. KENNEDY SPACE CENTER, NASA
KENNEDY SPACE CENTER, FLORIDA

REVITALIZE WATER & WASTEWATER SYSTEMS - KARS PARK I

EAST AND WEST GUN CLUB DOSING STATION ELECTRICAL PLANS

FILE NO.	SIZE	DWG. NO.	REV
	F	79K38879	A
PROJ. NO. 96968.3		SHEET 46	

NOTICE: When Government drawings, specifications, or other data are used for any purpose other than in connection with a definitely related Government procurement operation, the United States Government thereby incurs no responsibility nor obligation whatsoever; and the fact that the Government may have formulated, furnished, or in any way supplied the said drawings, specifications or other data is not to be regarded by implication or otherwise as in any manner licensing the holder or any other person or corporation, or conveying any rights or permission to manufacture, use, or sell any patented invention that may in any way be related thereto.

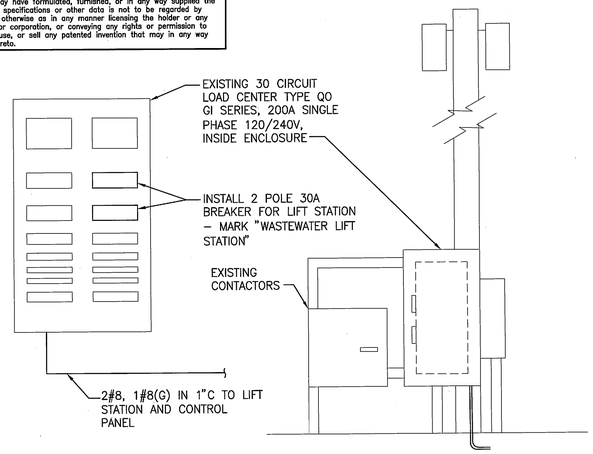

SOFTBALL FIELDS SOURCE PANEL DETAIL 1 / E7
NTS

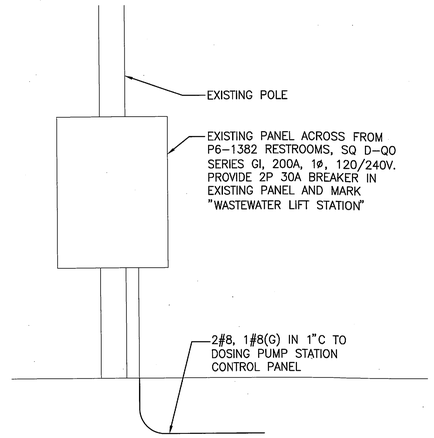

WEST GUN CLUB SOURCE PANEL DETAIL 2 / E7
NTS

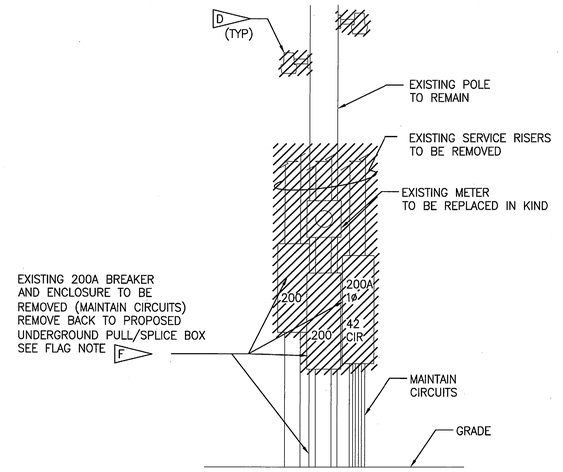

EXISTING SERVICE DROP DEMOLITION DETAIL 3 / E7
NTS

NOTES:

- A — CONTRACTOR SHALL PROVIDE METER FOR CERAMIC CLUB (GFE). COORDINATE WITH CO.
- B — PROPOSED 400 AMP SINGLE PHASE PANEL NEMA 4X-304 STAINLESS STEEL ENCLOSURE WITH 400A 2 POLE MAIN BREAKER, 1-20A 1 POLE, 15-30A 1 POLE, 1-30A 2 POLE, 1-100A 2 POLE, 2-200A 2 POLE, 6-20A 1 POLE SPARES; 6-30A 1 POLE SPARES, 42 CIRCUIT PANEL, BOTTOM FEED. 120/240V, PROVIDE TVSS UNIT LEVEL III.
- C — 4" CONDUIT WITH 3-500KCMIL PLUS 1-#3 GROUND UP TO NEW POLE MOUNTED TRANSFORMER, TEST AND MAKE ALL FINAL CONNECTIONS.
- D — EXISTING LIGHT FIXTURES TO BE REPLACED BY A SINGLE LIGHT FIXTURE LITHONIA KAD-250S-R5S SERIES OR APPROVED EQUAL. POWER TO PROPOSED LIGHT FIXTURE SHALL BE PROVIDED BY PROPOSED 400A PANEL.
- E — EXISTING FEEDERS AND BRANCH CIRCUITS TO BE SPLICED AND EXTENDED TO NEW 400A PANEL, USE SAME CONDUIT AND WIRE SIZES.
- F — 36"X36"X30" UNDERGROUND PULL/SPLICE BOX WITH TRAFFIC RATED COVER, EXTEND EXISTING FEEDERS AND BRANCH CIRCUITS INTO PULL/SPLICE BOX AND EXTEND TO NEW 400A PANEL.
- G — CONCRETE BASE TO BE 18'X18'X2' DEEP.
- H — 3/4" X 20' GROUND ROD AND 1/0 CONDUCTOR.
- J — 4"x4" CONCRETE POST AND STAINLESS STEEL MOUNTING HARDWARE.

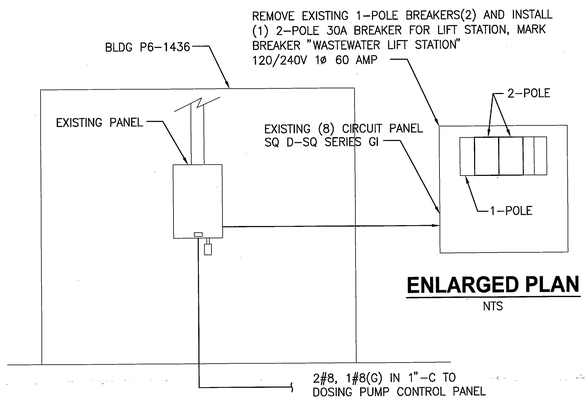

ENLARGED PLAN
NTS

EAST GUN CLUB SOURCE PANEL DETAIL 4 / E7
NTS

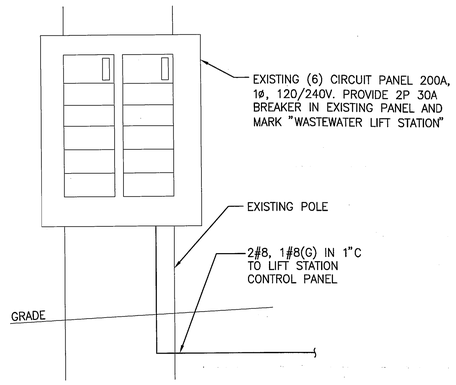

TENNIS COURT SOURCE PANEL DETAIL 5 / E7
NTS

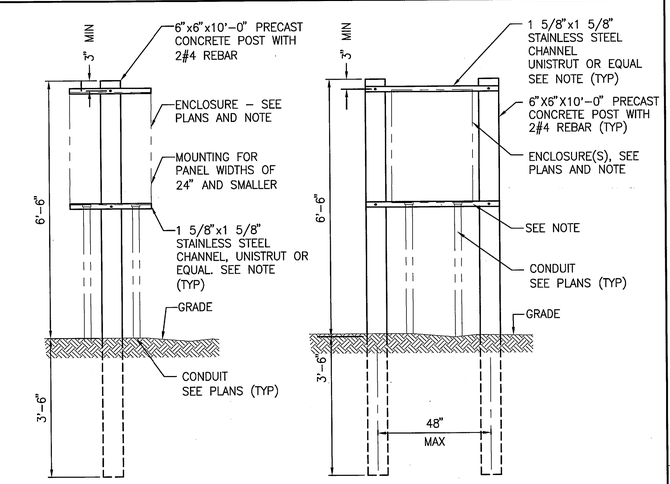

NOTE:
SECURE CHANNELS TO POST(S) AND ENCLOSURE(S) TO CHANNELS WITH STAINLESS STEEL HARDWARE.

TYPICAL EQUIPMENT MOUNTING ON CONCRETE POST(S) DETAIL
NTS

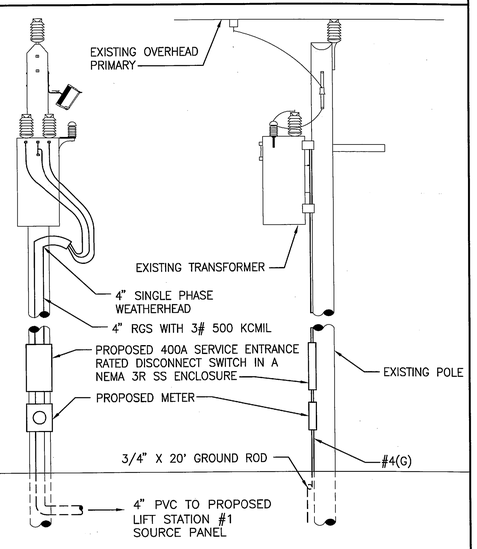

ELECTRICAL SERVICE DROP DETAIL 6 / E7
NTS

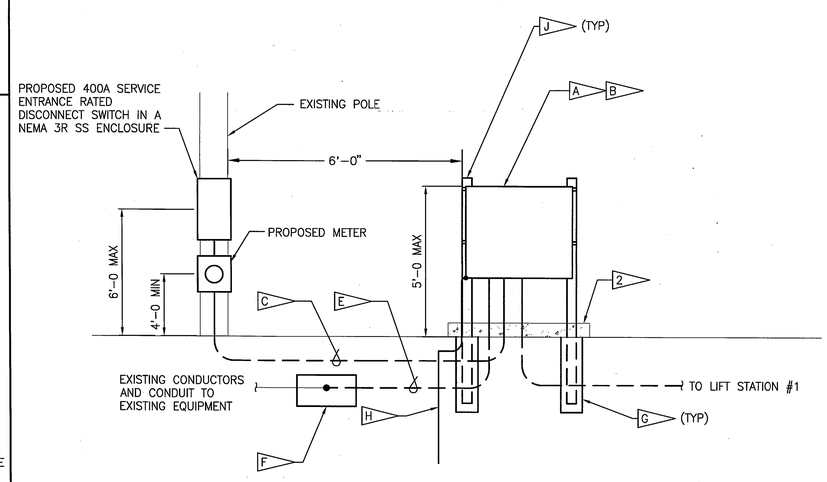

LIFT STATION #1 SOURCE PANEL RISER DIAGRAM 7 / E7
NTS

THIS SPACE RESERVED

SYM	ZONE	DESCRIPTION	DATE	APPROVED
A		GENERAL REVISIONS	10/31/11	

REVISIONS

THIS DRAWING CREATED IN AUTOCAD 2010 FILE FORMAT AND WILL BE REVISED ONLY ON AN AUTOCAD SYSTEM. FILE: 14000189-E07.DWG

JONES EDMUNDS
730 NE WALDO ROAD, GAINESVILLE, FLORIDA 32641 / (352) 377-5821
3910 S WASHINGTON AVE, SUITE 210, TITUSVILLE, FLORIDA 32780 / (321) 269-2950

SIGNATURES	DATE
DRAWN L MILLER	10/31/11
CHECKED M KOROS	10/31/11
SUBMITTED M. CLARK	10/31/11
ST of LICENSURE: FL LICENSE NO: 48898	
APPROVED M. CLARK	10/31/11
D. FRANG	11/1/11

NATIONAL AERONAUTICS AND SPACE ADMINISTRATION
JOHN F. KENNEDY SPACE CENTER, NASA
KENNEDY SPACE CENTER, FLORIDA

REVITALIZE WATER & WASTEWATER SYSTEMS - KARS PARK I

ELECTRICAL DETAILS

FILE NO.	SIZE	DWG. NO.	REV
	F	79K38879	A
PROJ. NO. 96968.3		SHEET 47	

E7

SC FORM 1-11 (3/76)(C/G 3/94)

NOTICE: When Government drawings, specifications, or other data are used for any purpose other than in connection with a definitely related Government procurement operation, the United States Government thereby incurs no responsibility nor obligation whatsoever; and the fact that the Government may have formulated, furnished, or in any way supplied the said drawings, specifications or other data is not to be regarded by implication or otherwise as in any manner licensing the holder or any other person or corporation, or conveying any rights or permission to manufacture, use, or sell any patented invention that may in any way be related thereto.

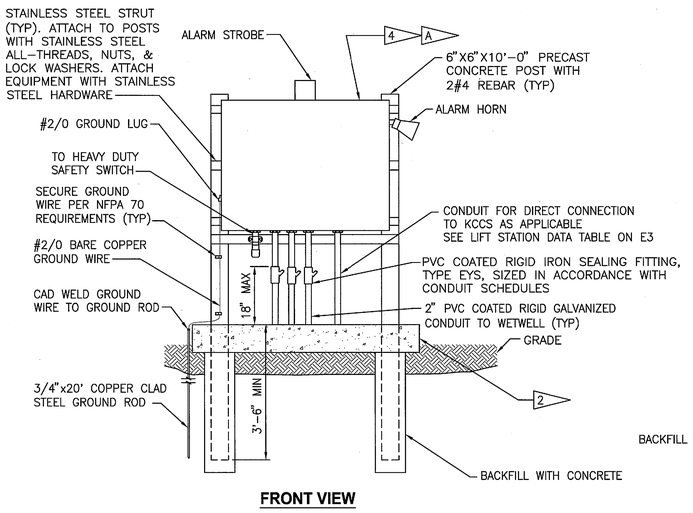

FRONT VIEW

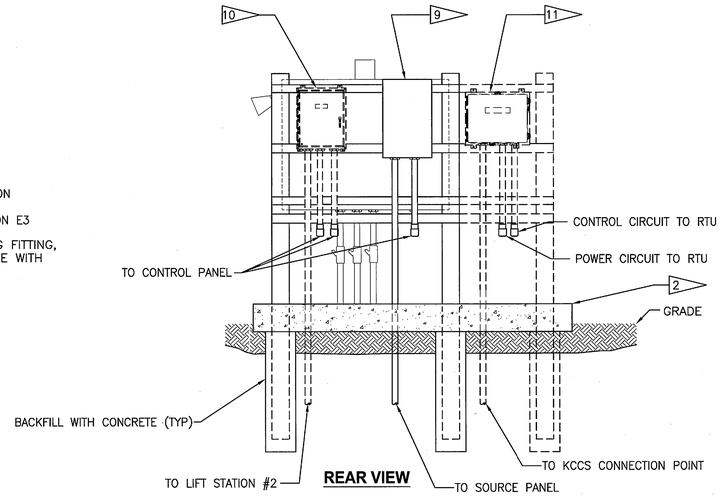

REAR VIEW

CONTROL PANEL DETAIL 1 / E8

NTS

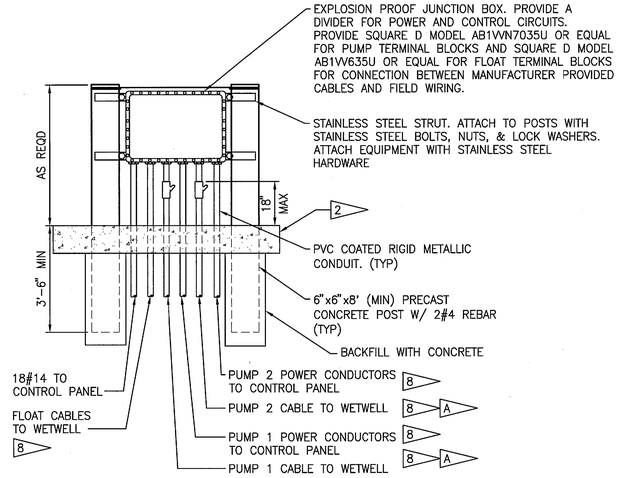

EXPLOSION-PROOF JUNCTION BOX MOUNTING DETAIL 2 / E8

NTS

NOTES:

A. LEAVE OUT CONDUIT SEAL TO WETWELL FOR CONDUITS 1-1/2" AND SMALLER.

B. SIZE DISCONNECT SWITCH FUSE TO MATCH LIFT STATION CONTROL PANEL MAIN BREAKER. SEE LIFT STATION DATA TABLE ON SHEET E3 FOR INDIVIDUAL LIFT STATION REQUIREMENTS.

THIS SPACE RESERVED

SYM	ZONE	DESCRIPTION	DATE	APPROVED
A		GENERAL REVISIONS	10/31/11	

REVISIONS

THIS DRAWING CREATED IN AUTOCAD 2010 FILE FORMAT AND WILL BE REVISED ONLY ON AN AUTOCAD SYSTEM. FILE: 14000189-E08.DWG

JONES EDMUNDS
730 NE WALDO ROAD, GAINESVILLE, FLORIDA 32641 / (352) 377-5821
3910 S WASHINGTON AVE, SUITE 210, TITUSVILLE, FLORIDA 32780 / (321) 269-2950

SIGNATURES	DATE
DRAWN L MILLER	10/31/11
CHECKED M KOROS	10/31/11
SUBMITTED M. CLARK	10/31/11
ST of LICENSURE: FL LICENSE NO: 48898	
APPROVED M. CLARK	10/31/11
D. TRANG	11/1/11

NATIONAL AERONAUTICS AND SPACE ADMINISTRATION
JOHN F. KENNEDY SPACE CENTER, NASA
KENNEDY SPACE CENTER, FLORIDA

REVITALIZE WATER & WASTEWATER SYSTEMS - KARS PARK I

ELECTRICAL DETAILS

FILE NO.	SIZE	DWG. NO.	REV
	F	79K38879	A

PROJ. NO. 96968.3 | SHEET 48

E8

03/25/04 15:27 SMS 14000079-E01.dwg

NOTICE: When Government drawings, specifications, or other data are used for any purpose other than in connection with a definitely related Government procurement operation, the United States Government thereby incurs no responsibility nor obligation whatsoever; and the fact that the Government may have formulated, furnished, or in any way supplied the said drawings, specifications or other data is not to be regarded by implication or otherwise as in any manner licensing the holder or any other person or corporation, or conveying any rights or permission to manufacture, use, or sell any patented invention that may in any way be related thereto.

INSTRUMENT IDENTIFICATION

EXAMPLE SYMBOLS

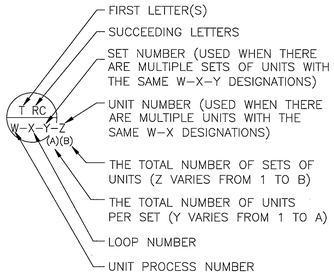

TT — FIELD MOUNTED INSTRUMENT

I/P FY — REAR–OF–PANEL MOUNTED INSTRUMENT

FIC — PANEL MOUNTED INSTRUMENT

QL — MOTOR CONTROL CENTER MOUNTED INSTRUMENT

INSTRUMENT IDENTIFICATION LETTERS TABLE

	FIRST LETTER(S)		SUCCEEDING LETTERS		
	PROCESS OR INITIATING VARIABLE	MODIFIER	READOUT OR PASSIVE FUNCTION	OUTPUT FUNCTION	MODIFIER
A	ANALYSIS (+)		ALARM		
B	BURNER FLAME		USERS CHOICE (+)	USERS CHOICE (+)	USERS CHOICE
C	CONDUCTIVITY			CONTROL	
D	DENSITY (S.G.)	DIFFERENTIAL			
E	VOLTAGE		PRIMARY ELEMENT		
F	FLOW RATE				
G	GAUGE		GLASS	GATE	
H	HAND (MANUAL)				HIGH
I	CURRENT		INDICATE		
J	POWER	SCAN			
K	TIME OR SCHEDULE			CONTROL STATION	
L	LEVEL		LIGHT (PILOT)		LOW
M	MOTION				MIDDLE
N	USERS CHOICE (+)		USERS CHOICE (+)	USERS CHOICE (+)	USERS CHOICE (+)
O	USERS CHOICE (+)		ORIFICE		
P	PRESSURE (OR VACUUM)		POINT (TEST CONNECTION)		
Q	QUANTITY OR EVENT (+)	INTEGRATE	INTEGRATE		
R			RECORD OR PRINT		
S	SPEED OR FREQUENCY	SAFETY		SWITCH	
T	TEMPERATURE			TRANSMIT	
U	MULTIVARIABLE (+)		MULTIFUNCTION (+)	MULTIFUNCTION (+)	MULTIFUNCTION (+)
V	VISCOSITY			VALVE OR DAMPER	
W	WEIGHT OR FORCE		WELL		
X	UNCLASSIFIED (+)		UNCLASSIFIED	UNCLASSIFIED (+)	UNCLASSIFIED (+)
Y	USERS CHOICE (+)			RELAY OR COMPUTE (+)	
Z	POSITION			DRIVE, ACTUATE OR UNCLASSIFIED FINAL CONTROL ELEMENT	

(+) WHEN USED, EXPLANATION IS SHOWN ADJACENT TO INSTRUMENT SYMBOL.
SEE ABBREVIATIONS AND LETTER SYMBOLS

SPECIAL CASES

OC QL — OPENED AND CLOSED EVENT LIGHTS

OC ZL — OPENED AND CLOSED POSITION LIGHTS

OC ZS — OPENED AND CLOSED POSITION SWITCHES

OO HS — ON–OFF HAND SWITCH. MAINTAINED CONTACT SWITCH (CONTROLLED DEVICE WILL NOT RESTART ON RETURN OF POWER AFTER POWER FAILURE).

SS HS — STOP–START HAND SWITCH MOMENTARY CONTACT SWITCHES (CONTROLLED DEVICE WILL NOT RESTART ON RETURN OF POWER AFTER POWER FAILURE).

OSC HS — ELECTRIC ACTUATOR WITH INTEGRAL OPEN–STOP–CLOSE MOMENTARY CONTACT CONTROL SWITCH

CM FIHK — FLOW INDICATING, COMPUTER/MANUAL CONTROL STATION

CAM FIC — FLOW INDICATING, COMPUTER/AUTO/MANUAL CONTROL STATION

SSC FIC — FLOW INDICATING SUPERVISORY SET POINT (BY COMPUTER), AUTO/MANUAL CONTROL STATION

TRANSDUCERS

A	ANALOG	I	CURRENT
D	DIGITAL	P	PNEUMATIC
E	VOLTAGE	PF	PULSE FREQUENCY
F	FREQUENCY	PD	PULSE DURATION
H	HYDRAULIC	R	RESISTANCE

EXAMPLE:

I/P FY — CURRENT TO PNEUMATIC TRANSDUCER (BACK OF PANEL, IN A FLOW LOOP)

XX XXX X–X — SOFTWARE IMPLEMENTED OPERATOR INTERFACE

XX — SOFTWARE IMPLEMENTED CALCULATION

LINE LEGEND

- PROCESS (CLOSED CONDUIT, DASHED LINE INDICATES ALTERNATE FLOW STREAM)
- PROCESS (FUTURE)
- ANALOG SIGNAL (4 TO 20 mAdc, ETC.)
- DISCRETE SIGNAL (ON/OFF, ETC.)
- PNEUMATIC SIGNAL
- FILLED SYSTEM SIGNAL
- HYDRAULIC SYSTEM SIGNAL
- DATA LINK
- MANUFACTURER SUPPLIED SIGNAL CABLE
- SERIAL SIGNAL
- FIBER OPTIC
- BUILDING OR FACILITY BOUNDARY
- PACKAGE SYSTEM EQUIPMENT

PARALLELING LINES

(2) 3(2)

(A) (B)

(A) TOTAL OF 2 SIGNALS

(B) 3 TYPICAL SETS OF 2 SIGNALS EACH. TOTAL OF 6 SIGNALS.

CONNECTING LINES

NON–CONNECTING LINES

INTERFACE SYMBOLS

WA S — D WA

= PROCESS INTERFACE

= SIGNAL INTERFACE

W = SOURCE UNIT PROCESS NO.

A = INTERFACE NO.

D = DESTINATION DRAWING NO.

S = SOURCE DRAWING NO.

N — PROCESS OR SIGNAL LINE CONTINUATION N=1,2,3,ETC

INTERFACE TO OR FROM PROCESS EXTERNAL TO PROJECT

SELF CONTAINED VALVE, ACTUATED VALVE & EQUIPMENT TAG NUMBERS

WD–XY
W = UNIT PROCESS NUMBER
X = LOOP NUMBER
Y = UNIT NUMBER

D:

GW	= GATEWAY	PD	= PULSATION DAMPER
HT	= HYDRO TURBINE	SM	= STATIC MIXER
LIU	= LIGHT INTERFACE UNIT	TC	= TRANSCEIVER
M	= MECHANICAL EQUIPMENT	TK	= TANK
MC	= MEDIA CONVERTER	V	= VALVE (SEE VALVE SCHEDULE)
MP	= METERING PUMP	VH	= VAPOR HEATER
NS	= NETWORK SWITCH	VP	= VAPORIZER
OWS	= OPERATOR WORKSTATION		
P	= PUMP		

ABBREVIATIONS & LETTER SYMBOLS

AC	ALTERNATING CURRENT
ALKY	ALKALINITY
AM	AUTO–MANUAL
CAM	COMPUTER–AUTO–MANUAL
CCS	CENTRAL CONTROL SYSTEM
CL_2	CHLORINE (TYPICAL: USE STANDARD CHEMICAL ELEMENT ABBREVIATION)
CM	COMPUTER–MANUAL
COD	CHEMICAL OXYGEN DEMAND
XCP–Y	CONTROL PANEL: X=UNIT PROCESS NO. , Y=LOOP NO.
DC	DIRECT CURRENT
DO	DISSOLVED OXYGEN
FCL_2	FREE CHLORINE RESIDUAL
FOS	FAST–OFF–SLOW
FOSA	FAST–OFF–SLOW–AUTO
FOSR	FAST–OFF–SLOW–REMOTE
XFP–Y	FIELD PANEL: X=UNIT PROCESS NO. , Y=LOOP NO.
FR	FORWARD–REVERSE
HDNS	HARDNESS
HOA	HAND–OFF–AUTO
HOR	HAND–OFF–REMOTE
LEL	LOWER EXPLOSIVE LIMIT
LIU	LIGHT INTERFACE UNIT
LOS	LOCKOUT STOP
LR	LOCAL–REMOTE
MA	MANUAL–AUTO
MBAS	METHYLENE BLUE ACTIVE SUBSTANCES
MC	MODULATE–CLOSE
MCC–X	MOTOR CONTROL CENTER NO. X
MP	METERING PUMP
MSC	MANUFACTURER SUPPLIED CABLE
NIP	NETWORK INTERFACE PANEL
OC	OPEN–CLOSE (D)
OCR	OPEN–CLOSE–REMOTE
OCA	OPEN–CLOSE–AUTO
OO	ON–OFF
OOA	ON–OFF–AUTO
OOR	ON–OFF–REMOTE
OP	ORTHO PHOSPHATE
ORP	OXIDATION REDUCTION POTENTIAL
OSC	OPEN–STOP–CLOSE
pH	HYDROGEN ION CONCENTRATION
PLC	PROGRAMMABLE LOGIC CONTROLLER
RM–X	REMOTE MULTIPLEXING MODULE NO. X
RTU–X	REMOTE TELEMETRY UNIT NO. X
SF	SLOWER–FASTER
SS	START–STOP
SSC	SUPERVISORY SET POINT CONTROL
TCL_2	TOTAL CHLORINE RESIDUAL
TK	TANK
TOC	TOTAL ORGANIC CARBON
TOD	TOTAL OXYGEN DEMAND
TURB	TURBIDITY
VFD	VARIABLE FREQUENCY DRIVE
VH	VAPOR HEATER
VHC	VOLATILE HYDROCARBONS
VIB	VIBRATION
VP	VAPORIZER

GENERAL NOTES

1. COMPONENTS AND PANELS SHOWN WITH A DOUBLE ASTERISK (**) ARE TO BE PROVIDED AS PART OF A PACKAGE SYSTEM
2. COMPONENTS AND PANELS SHOWN WITH A SINGLE ASTERISK (*) ARE TO BE UNDER DIVISION 26, ELECTRICAL.
3. THIS IS A STANDARD LEGEND. THEREFORE, NOT ALL OF THIS INFORMATION MAY BE USED ON THIS PROJECT.
4. ALL COMPONENTS SHOWN INSIDE PACKAGE SYSTEM BOUNDARY ARE TO BE PROVIDED AS PART OF THE PACKAGE SYSTEM.

THIS SPACE RESERVED

SYM	ZONE	DESCRIPTION	DATE	APPROVED
A		GENERAL REVISIONS	10/31/11	

REVISIONS

THIS DRAWING CREATED IN AUTOCAD 2010 FILE FORMAT AND WILL BE REVISED ONLY ON AN AUTOCAD SYSTEM. FILE: 14000189–I01.DWG

JONES EDMUNDS
730 NE WALDO ROAD, GAINESVILLE, FLORIDA 32641 / (352) 377-5821
3910 S WASHINGTON AVE, SUITE 210, TITUSVILLE, FLORIDA 32780 / (321) 269-2950

SIGNATURES	DATE
DRAWN D. FITZGERALD	10/31/11
CHECKED M. CLARK	10/31/11
SUBMITTED D. FITZGERALD	10/31/11
ST of LICENSURE: FL LICENSE NO: 40976	
Approved: M. CLARK	10/31/11
L. KIEL	11/1/11

NATIONAL AERONAUTICS AND SPACE ADMINISTRATION
JOHN F. KENNEDY SPACE CENTER, NASA
KENNEDY SPACE CENTER, FLORIDA

REVITALIZE WATER & WASTEWATER SYSTEMS - KARS PARK I

INSTRUMENTATION AND CONTROLS LEGEND SHEET 1 OF 2

FILE NO.	SIZE	DWG. NO.	REV
	F	79K38879	A

PROJ. NO. 96968.3 SHEET 49

I1

D. P. FITZGERALD, INC.
Water & Wastewater Treatment
Process Controls
Alachua, Florida *CGA 8991*

NOTICE: When Government drawings, specifications, or other data are used for any purpose other than in connection with a definitely related Government procurement operation, the United States Government thereby incurs no responsibility nor obligation whatsoever; and the fact that the Government may have formulated, furnished, or in any way supplied the said drawings, specifications or other data is not to be regarded by implication or otherwise as in any manner licensing the holder or any other person or corporation, or conveying any rights or permission to manufacture, use, or sell any patented invention that may in any way be related thereto.

VALVE SYMBOLS

- GATE
- K — KNIFE GATE
- BUTTERFLY
- GLOBE
- BALL
- V — VEE– BALL
- PLUG
- SEAT PORT ECCENTRIC PLUG
- DIAPHRAGM
- PINCH
- NEEDLE
- SWING CHECK
- DOUBLE CHECK BACKFLOW PREVENTER
- RP — REDUCED PRESSURE BACKFLOW PREVENTER
- BALL CHECK
- PRESSURE RELIEF
- AIR AND/OR VACUUM RELEASE
- OR — REGULATED SIDE PRESSURE/CONTROL
- MULTI–PORT VALVES (BALL VALVE SHOWN. FOR OTHER VALVE TYPES, APPROPRIATE VALVE SYMBOL SHOWN). ARROWS INDICATE FLOW PATTERN. SEAT PORTS ARE IMPLIED BY INDICATED FLOW PATTERN.
- S — SAMPLE
- MUD
- FLOW CONTROL VALVE

GATE SYMBOLS

- SLUICE
- BUTTERFLY
- FLAP
- FABRICATED SLIDE
- SHEAR

ACTUATOR SYMBOLS

- M XX — MOTORIZED
- EH XX — ELECTROHYDRAULIC
- P XX — PNEUMATIC
- H XX — HYDRAULIC
- S — SOLENOID
- MANUAL

NOTES:

1. ON LOSS OF PRIMARY POWER (PNEUMATIC, ELECTRICAL OR HYDRAULIC)
   XX: FO = FAIL OPEN
   FC = FAIL CLOSED
   FLP = FAIL TO LAST POSITION

PRIMARY ELEMENT SYMBOLS

- PARSHALL FLUME
- WEIR
- ORIFICE PLATE
- FLOW TUBE
- PITOT–STATIC
- VORTEX METER
- ROTAMETER
- ULTRASONIC FLOWMETER (INLINE)
- THERMAL MASS FLOW METER
- MASS FLOW METER
- ELECTROMAGNETIC FLOWMETER
- PROPELLER OR TURBINE METER
- X — DENSITY METER (X: N = NUCLEAR, O = OPTICAL, U = ULTRASONIC)
- ULTRASONIC FLOWMETER (CLAMP–ON)
- LEVEL (ULTRASONIC)
- LEVEL (BUBBLER TUBE)
- ELECTRODE
- LS — LEVEL (FLOAT)
- OR — LS

MISCELLANEOUS SYMBOLS

NOTE:
XX: AS ADJUSTABLE SPEED
CS–1 CONSTANT SPEED (SINGLE SPEED)
CS–2 CONSTANT SPEED (TWO SPEED)

- SIGHT GLASS
- DIAPHRAGM SEAL
- BLIND FLANGE
- AIR GAP
- V — VENT TO ATMOSPHERE
- PLUG
- RECEPTACLE
- RADIO ANTENNA
- A, ON–TD X–SEC, B — "ON" TIME DELAY. B "ON" X–SEC. AFTER A "ON". INSTANT "OFF".
- A, OFF–TD X–SEC, B — "OFF" TIME DELAY. B "OFF" X–SEC. AFTER A "OFF". INSTANT "ON".
- I — OR — INTERLOCK. SEE CONTROL DIAGRAMS
- XX — AIR SET, XX= SUPPLY PRESSURE IN PSIG.
- AIR SET FILTER/ REGULATOR/ GAUGE SET
- CALIBRATION CYLINDER
- STATIC MIXER
- FILTER
- 120VAC — 120 VOLT, 60 HZ POWER
- 480VAC — 480 VOLT, 60 HZ POWER
- ANNULAR DIAPHRAGM SEAL
- OR M OR M — MIXER
- M XX — ELECTRIC MOTOR
- PRESSURE GAUGE
- CARD READER
- SECURITY CAMERA
- OPERATOR WORKSTATION
- A, B, AND, C — LOGIC ELEMENT: IF A AND NOT B THEN C
- A, B, OR, C — LOGIC ELEMENT: IF A OR B THEN C
- S, R — ON/OFF RELAY. INPUT IS CONNECTED TO OUTPUT WHEN SWITCHING SIGNAL IS PRESENT.
- S, R — SWITCHING SIGNAL SWITCHING RELAY. INPUT WITH DOT IS CONNECTED TO OUTPUT WHEN SWITCHING SIGNAL IS PRESENT. OTHER INPUT IS CONNECTED TO OUTPUT WHEN SWITCHING SIGNAL IS NOT PRESENT.
- F — FLUSHING CONNECTION
- HOSE ADAPTOR
- S — SEAL WATER SET
- SIGHT GLASS
- PULSATION DAMPENER
- D — HUB DRAIN
- QUICK DISCONNECT

PUMP AND COMPRESSOR SYMBOLS

- XX — CENTRIFUGAL PUMP (DRY PIT)
- XX — CENTRIFUGAL WET PIT PUMP OR TURBINE PUMP
- XX — CHEMICAL FEED PUMP
- XX — DIAPHRAGM PUMP
- XX — GEAR PUMP OR BLOWER (POSITIVE DISPLACEMENT)
- XX — PISTON PUMP
- XX — PROGRESSIVE CAVITY PUMP
- XX — SUBMERSIBLE SUMP PUMP
- XX — PERISTALTIC HOSE PUMP
- XX — COMPRESSOR (CENTRIFUGAL), BLOWER OR TURBINE
- XX — COMPRESSOR (PISTON)
- EJECTOR

- RADIO LINK
- NETWORK GATEWAY OR BRIDGE
- LIGHT–COPPER TRANSCEIVER
- COMPUTER WORKSTATION OR SERVER
- WYE
- CONCENTRIC REDUCER
- ECCENTRIC REDUCER
- LEVEL GAUGE

THIS SPACE RESERVED

SYM	ZONE	DESCRIPTION	DATE	APPROVED
A		GENERAL REVISIONS	10/31/11	

REVISIONS

THIS DRAWING CREATED IN AUTOCAD 2010 FILE FORMAT AND WILL BE REVISED ONLY ON AN AUTOCAD SYSTEM. FILE: 14000189–I02.DWG

JONES EDMUNDS
730 NE WALDO ROAD, GAINESVILLE, FLORIDA 32641 / (352) 377-5821
3910 S WASHINGTON AVE, SUITE 210, TITUSVILLE, FLORIDA 32780 / (321) 269-2950

SIGNATURES	DATE
DRAWN D. FITZGERALD	10/31/11
CHECKED M CLARK	10/31/11
SUBMITTED D. P. Fitzgerald	10/31/11
ST OF LICENSURE: FL LICENSE NO: 40976	
APPROVED M. CLARK	10/31/11
L. KIEL	11/2/11

NATIONAL AERONAUTICS AND SPACE ADMINISTRATION
JOHN F. KENNEDY SPACE CENTER, NASA
KENNEDY SPACE CENTER, FLORIDA

REVITALIZE WATER & WASTEWATER SYSTEMS - KARS PARK I

INSTRUMENTATION AND CONTROLS LEGEND SHEET 2 OF 2

FILE NO.	SIZE	DWG. NO.	REV
	F	79K38879	A
PROJ. NO. 96968.3		SHEET 50	

12

D. P. FITZGERALD, INC.
Water & Wastewater Treatment
Process Controls
Alachua, Florida COA 8991

NOTICE: When Government drawings, specifications, or other data are used for any purpose other than in connection with a definitely related Government procurement operation, the United States Government thereby incurs no responsibility nor obligation whatsoever; and the fact that the Government may have formulated, furnished, or in any way supplied the said drawings, specifications or other data is not to be regarded by implication or otherwise as in any manner licensing the holder or any other person or corporation, or conveying any rights or permission to manufacture, use, or sell any patented invention that may in any way be related thereto.

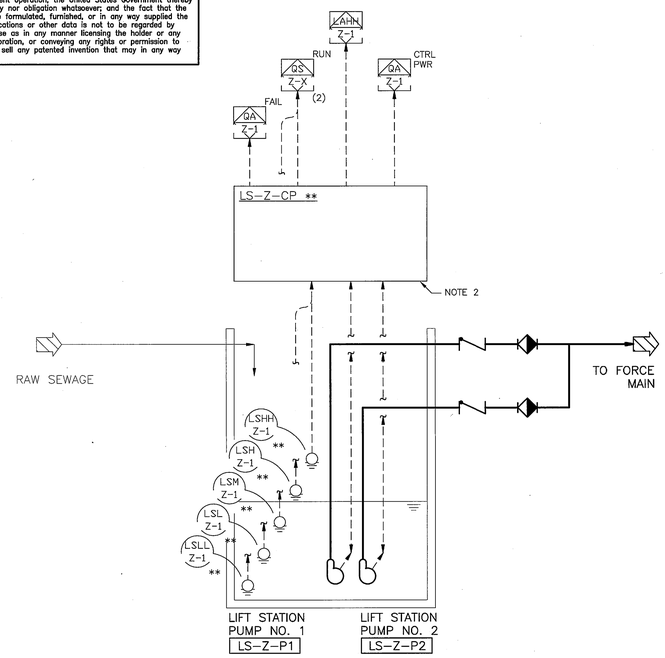

P&ID - GENERAL LIFT STATION

NTS

NOTES:

A. THE TERM 'Z' REFERS TO THE LIFT STATION NUMBER (I.E. Z=1 FOR LIFT STATION 1)

GENERAL LIFT STATION SEQUENCE OF OPERATION

GENERAL

THE LIFT STATIONS ARE DUPLEX PUMP CONFIGURATION USING LEVEL FLOATS TO MONITOR THE WET WELL LEVEL AND START/STOP THE PUMPS. THE PUMP CONTROL SHALL BE ELECTROMECHANICAL BASED (RELAY LOGIC). CONTROL PANEL SHALL PROVIDE SEPARATE, DEDICATED TERMINAL BLOCKS FOR THE PURPOSE OF TRANSMITTING STATION STATUS TO THE SCADA APPLICATION VIA KCCS.

CONTROL SEQUENCE

LIFT STATION PUMP START/STOP CONTROL

MANUAL MODE – PROVIDE FOR OPERATOR START/STOP CONTROL, EACH LOCAL TO THE PUMPS. STOP THE SELECTED PUMPS WHENEVER EITHER OF THE THE FOLLOWING EVENTS OCCUR
ASSOCIATED PUMP FAIL ALARM
WET WELL LEVEL LOW LOW.

AUTOMATIC MODE – START/STOP THE LEAD PUMP TO MAINTAIN THE WET WELL LEVEL WITHIN AN ADJUSTABLE RANGE AS FOLLOWS:
START LEAD (LEVEL MEDIUM)
START LAG (LEVEL HIGH)
STOP (LEVEL LOW)
INITIAL LEVEL VALUES FOR EACH LIFT STATION ARE AS PRESENTED IN THE MECHANICAL DRAWINGS

START BOTH PUMPS WHENEVER THE WET WELL LEVEL HIGH HIGH CONDITION EXIST

STOP THE PUMP(S) WHENEVER EITHER OF THE THE FOLLOWING EVENTS OCCUR
ASSOCIATED PUMP FAIL ALARM
WET WELL LEVEL LOW LOW.

ALTERNATE LEAD PUMP SELECTION WHENEVER ALL PUMPS ARE OFF.

ALARM EVENTS

MAINTAIN ALL ALARM EVENTS UNTIL THE OFFENDING CONDITION IS REMOVED AND THE ALARM IS MANUALLY ACKNOWLEDGED (LOCAL RESET)

GENERAL – LOSS OF CONTROL POWER

WET WELL – LEVEL HIGH HIGH
LEVEL LOW LOW

LIFT STATION PUMP – PROVIDE A PUMP FAIL ALARM EVENT WHENEVER ANY OF THE FOLLOWING CONDITIONS EXIST

CALL TO RUN, NOT RUNNING
LOSS OF PHASE

PROVIDE A PUMP TROUBLE EVENT WHENEVER ANY OF THE FOLLOWING CONDITIONS EXIST

MOTOR WINDING TEMPERATURE HIGH
MOTOR SEAL FAILURE

KCCS MONITORING/CONTROL

MONITORING: DISPLAY THE FOLLOWING DISCRETE SIGNALS
LIFT STATION PUMP RUN STATUS

CONTROL: NONE

ALARM EVENTS: DISPLAY THE FOLLOWING ALARM EVENTS
WET WELL LEVEL HIGH
LOSS OF CONTROL POWER
COMMON PUMP FAIL

THIS SPACE RESERVED

SYM	ZONE	DESCRIPTION	DATE	APPROVED
A		GENERAL REVISIONS	10/31/11	KM

REVISIONS

THIS DRAWING CREATED IN AUTOCAD 2010 FILE FORMAT AND WILL BE REVISED ONLY ON AN AUTOCAD SYSTEM. FILE: 14000189-I03.DWG

JONES EDMUNDS
730 NE WALDO ROAD, GAINESVILLE, FLORIDA 32641 / (352) 377-5821
3910 S WASHINGTON AVE, SUITE 210, TITUSVILLE, FLORIDA 32780 / (321) 269-2950

SIGNATURES	DATE
DRAWN D. FITZGERALD	10/31/11
CHECKED M CLARK	10/31/11
SUBMITTED D. FITZGERALD	10/31/11
ST of LICENSURE: FL LICENSE NO: 40976	
Approved M. CLARK	10/31/11
L. KIEL	11/2/11

NATIONAL AERONAUTICS AND SPACE ADMINISTRATION
JOHN F. KENNEDY SPACE CENTER, NASA
KENNEDY SPACE CENTER, FLORIDA

REVITALIZE WATER & WASTEWATER SYSTEMS - KARS PARK I

P&ID AND SEQUENCE OF OPERATION - GENERAL LIFT STATIONS

FILE NO.	SIZE	DWG. NO.	REV
	F	79K38879	A

PROJ. NO. 96968.3 SHEET 51

D. P. FITZGERALD, INC.
Water & Wastewater Treatment
Process Controls
Alachua, Florida COA 8991

13

NOTICE: When Government drawings, specifications, or other data are used for any purpose other than in connection with a definitely related Government procurement operation, the United States Government thereby incurs no responsibility nor obligation whatsoever; and the fact that the Government may have formulated, furnished, or in any way supplied the said drawings, specifications or other data is not to be regarded by implication or otherwise as in any manner licensing the holder or any other person or corporation, or conveying any rights or permission to manufacture, use, or sell any patented invention that may in any way be related thereto.

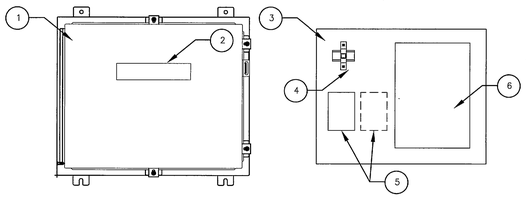

ENCLOSURE FACE ELEVATION INTERIOR PANEL ELEVATION

ITEM No.	DESCRIPTION	SPECIFICATION
1	ENCLOSURE	NEMA 3R, SST, W/ 3-POINT LATCH
2	PANEL NAMEPLATE	ENGRAVE-'NETWORK INTERFACE PANEL'
3	PANEL AND ACCESSORIES	CARBON STEEL, PAINTED WHITE, BAKED-ENAMEL FINISH
4	MAIN CIRCUIT BREAKER	
5	MEDIA CONVERTER	COMPONENT Y87
6	LIGHT INTERFACE UNIT	COMPONENT Y85

NETWORK INTERFACE PANEL

NTS

1 / I4

NOTES:

A. ITEMS IDENTIFIED ABOVE WITH A COMPONENT NUMBER ARE SPECIFIED IN SECTION 40 95 00 PROCESS CONTROL SYSTEMS. THE COMPONENT NUMBER REFERENCES A COMPONENT SPECIFICATION PROVIDED AS AN ATTACHMENT TO SECTION 40 95 00.

B. INSTALL WALL MOUNTED ADJACENT TO THE CONTROL PANEL

C. POWER SUPPLIED BY LIFT STATION CONTROL PANEL

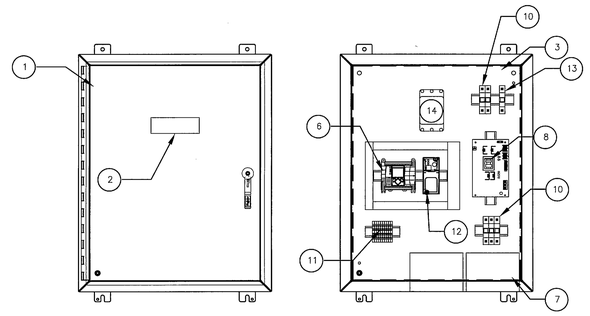

ENCLOSURE FRONT PANEL LAYOUT

ITEM No.	DESCRIPTION	SPECIFICATION
1	ENCLOSURE	NEMA 3R, SST, W/ 3-POINT LATCH
2	CONTROL PANEL NAMEPLATE	ENGRAVE 'REMOTE TERMINAL UNIT'
3	PANEL AND ACCESSORIES	CARBON STEEL, PAINTED WHITE, BAKED-ENAMEL FINISH
4	NOT USED	
5	NOT USED	
6	PROGRAMMABLE LOGIC CONTROLLER	COMPONENT Y54
7	12 VDC BATTERIES, QTY=2	
8	24 VDC POWER SUPPLY UNIT	
9	NOT USED	
10	FEEDER BREAKER	
11	TERMINAL BLOCKS	
12	NETWORK INTERFACE MODULE	COMPONENT Y30
13	MAIN CIRCUIT BREAKER	
14	MAIN SURGE SUPPRESSOR	

PANEL DRAWING - REMOTE TERMINAL UNIT PANEL

NTS

2 / I4

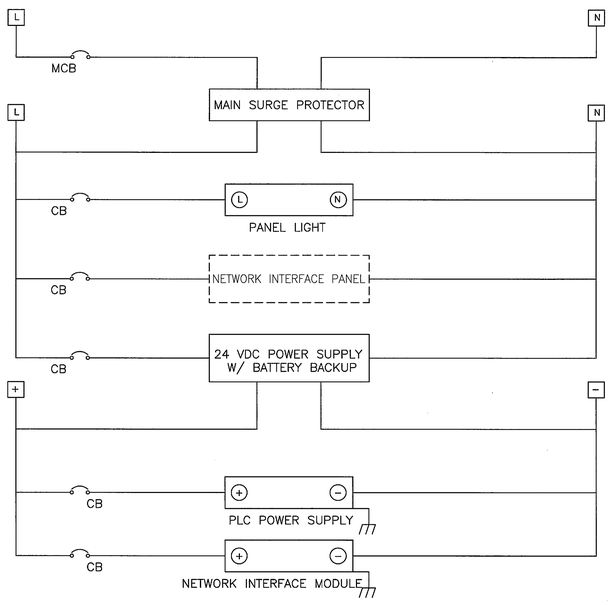

POWER DISTRIBUTION - REMOTE TERMINAL UNIT PANEL

NTS

D. P. FITZGERALD, INC.
Water & Wastewater Treatment
Process Controls
Alachua, Florida COA 8991

THIS SPACE RESERVED

SYM	ZONE	DESCRIPTION	DATE	APPROVED
A		GENERAL REVISIONS	12/05/11	KEM

REVISIONS

THIS DRAWING CREATED IN AUTOCAD 2010 FILE FORMAT AND WILL BE REVISED ONLY ON AN AUTOCAD SYSTEM. FILE: 14000189-I04.DWG

JONES EDMUNDS
730 NE WALDO ROAD, GAINESVILLE, FLORIDA 32641 / (352) 377-5821
3910 S WASHINGTON AVE, SUITE 210, TITUSVILLE, FLORIDA 32780 / (321) 269-2950

SIGNATURES	DATE
DRAWN D. FITZGERALD	12/05/11
CHECKED M CLARK	12/05/11
SUBMITTED D. FITZGERALD	12/05/11
ST of LICENSURE: FL LICENSE NO: 40976	
APPROVED M. CLARK	12/05/11
L. KIEL	12/5/11

NATIONAL AERONAUTICS AND SPACE ADMINISTRATION
JOHN F. KENNEDY SPACE CENTER, NASA
KENNEDY SPACE CENTER, FLORIDA

REVITALIZE WATER & WASTEWATER SYSTEMS - KARS PARK I

PANEL DRAWINGS AND MOUNTING DETAILS

FILE NO.	SIZE	DWG. NO.	REV
	F	79K38879	A

PROJ. NO. 96968.3 SHEET 52 of 57

I4