DRAWING LIST

DRAWING NUMBER: DRAWING CODE	DRAWING NUMBER: BALLOON NO	DESCRIPTION	QTY/ ASSY
G46710MRA200		SMALL TRANSITION DUCT WELDMENT ASSEMBLY	1
G46710MRA105		LIFT LUG	1
G46710MRA201		SMALL TRANSITION DUCT	1
G46710MRA202		SMALL TRANSITION DUCT MATING FLANGE	1
G46710MRA203		SMALL TRANSITION DUCT SMALL FLANGE	1

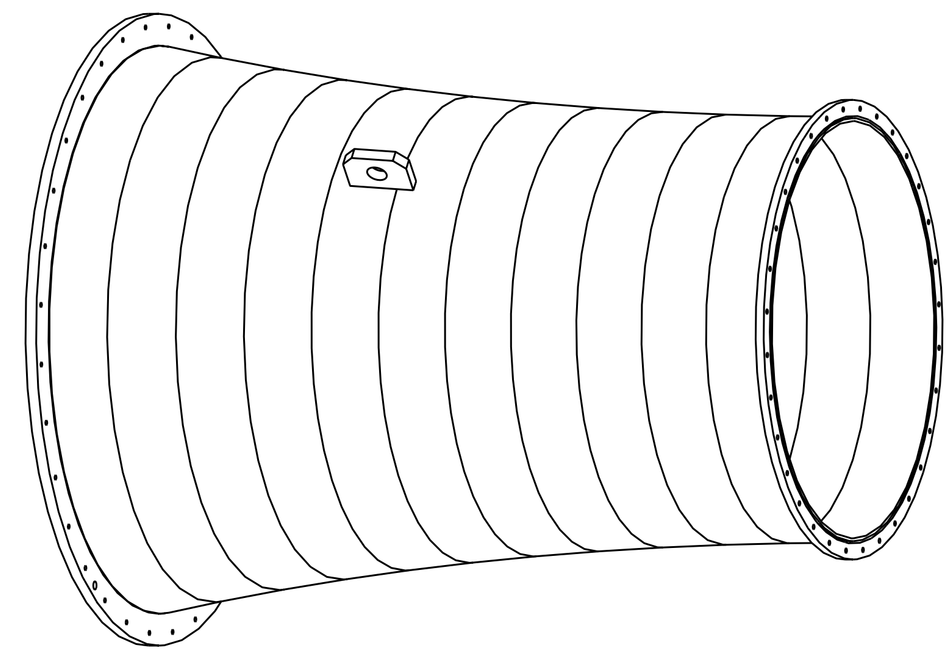

1. ALL WELDS TO BE FULL PENETRATION.
2. WELDER TO BE QUALIFIED AND CERTIFIED PER AWS D17.1, SECTION 4.
3. WELD PER AWS D17.1, CLASS B. INSPECT PER AWS D17.1, SECTION 6. CONTROL AND VERIFY WELD ROD/FILLER MATERIAL PER NASA STD-5006. CERTIFICATE OF CONFORMANCE REQUIRED FOR WELD ROD/FILLER MATERIAL.
4. THERMAL STRESS RELIEVE AFTER WELDING AND BEFORE FINAL MACHINING.
5. VERIFY CHAMFERED SIDE OF FLANGES (ITEMS A202 AND A203) FACE OUTWARD BEFORE WELDING.
6. AFTER STRESS RELIEF, MACHINE HOLE PATTERNS ON FLANGES. MACHINE HOLE PATTERN AND ALIGNMENT HOLES ON ITEM A202 PER DRAWING G46710MRA202. MACHINE HOLE PATTERN ON ITEM A203 PER DRAWING G46710MRA203. LIFT LUG (ITEM A105) AND FLANGE HOLES ON ITEMS A202 AND A203 TO BE ALIGNED WITH VERTICAL CENTERLINE WITHIN .020". NOTE ORIENTATION OF ALIGNMENT HOLES ON ITEM A202.

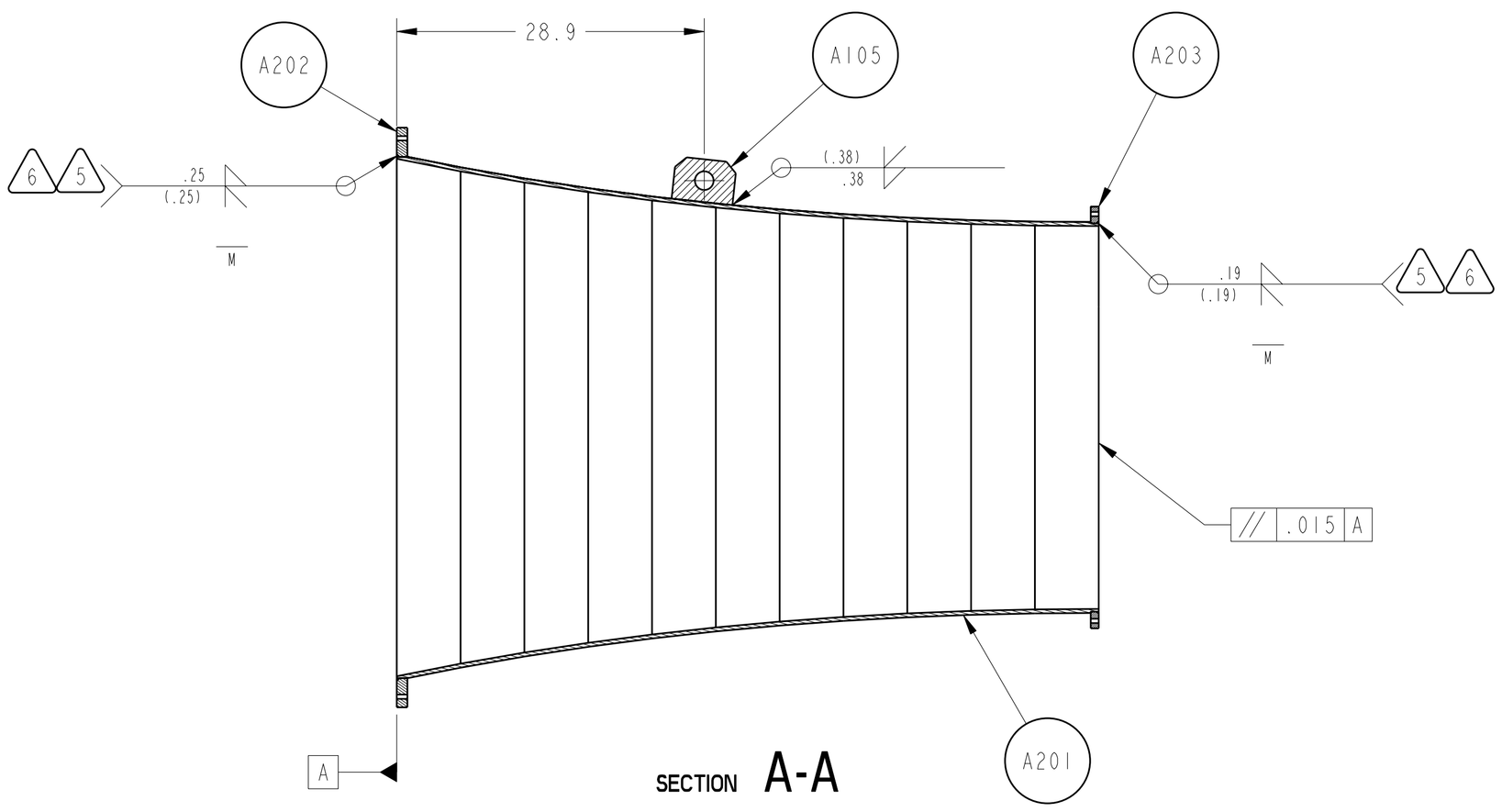

SECTION A-A

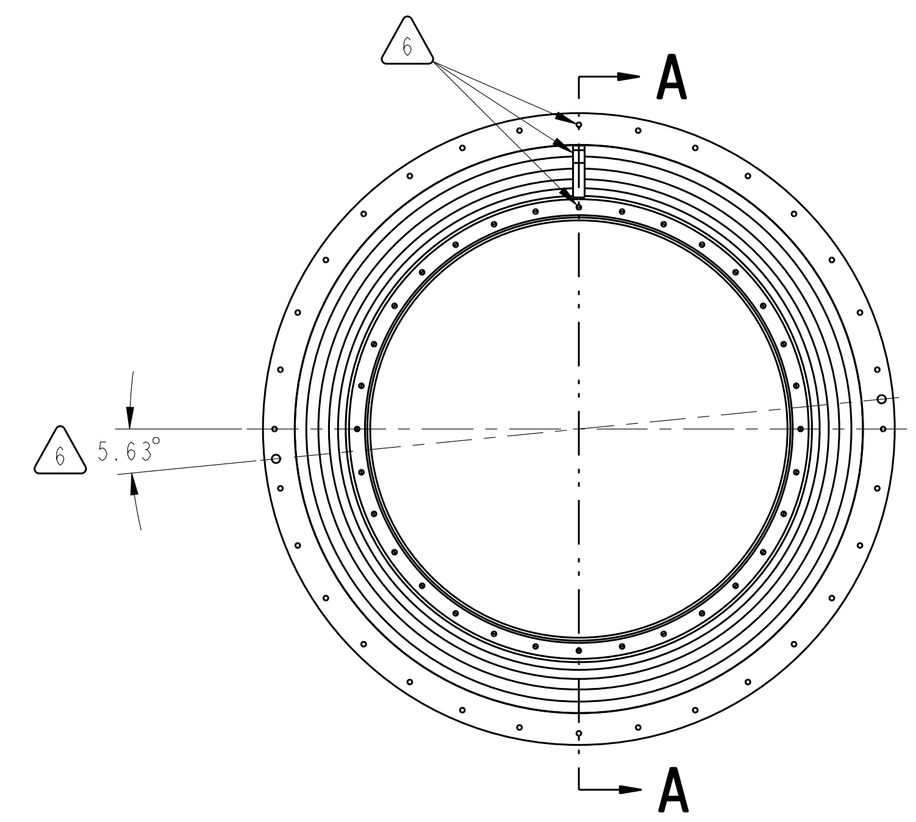

CHG	ZONE	DESCRIPTION	APP/DATE

REVISIONS

PRIOR TO USE VERIFY THE INTENDED PURPOSE IN PDM ("FOR" ATTRIBUTE)

UNLESS OTHERWISE SPECIFIED DIMENSIONS ARE IN INCHES

CONTRACT NNC06BA07B
CONTRACTOR ASRC AEROSPACE

TOLERANCE ON		TASK ORDER	G467
.X	± 0.03	DRAFTER	ASRC/PN
.XX	± 0.01	ENGINEER	ASRC/PN
.XXX	± 0.005	DESIGNER	ASRC/PN
FRACTION	± -	DIMENSIONING AND TOLERANCING PER ASME Y14.5M-1994	
ANGULAR	± 0.50°		
BREAK EDGES	.010-.020		

NATIONAL AERONAUTICS AND SPACE ADMINISTRATION
JOHN H. GLENN RESEARCH CENTER
LEWIS FIELD
CLEVELAND, OHIO

DUCT SECTION MATCH ASSEMBLIES

G46710MRA150 & G46710MRA250

A200 SMALL TRANSITION DUCT WELDMENT ASSEMBLY

PDM REL LEVEL: PDM REVISION:

PDM DATABASE:
MODEL NAME: G46710MRA200_SM_TRNS_DUCT_ASM

CHECK FOR ANY OUTSTANDING ECO'S PRIOR TO USE

SIZE	DRAWING NUMBER	REV	BLDG	AREA
D	G46710MRA200	-	125	-

UNITS: INCH

SCALE:	INITIAL REL DATE	SHEET	DISCIPLINE
1/10	12/6/2010	1 OF 1	MECHANICAL

PRO/E VERSION: Wildfire 3.0

SIZE D DRAWING NUMBER G46710MRA200 REV -

NAME:FANEYMAN OBJECT:G46710MRA200_SM_TRNS_DUCT_ASM DATE:12-Jul-11 13:04:46