DRAWING LIST

DRAWING NUMBER: DRAWING CODE	DRAWING NUMBER: BALLOON NO	DESCRIPTION	QTY/ ASSY
G46710MRA150		LARGE/SMALL TRANSITION DUCT MATCH ASSEMBLY	1
G46710MRA100		LARGE TRANSITION DUCT WELDMENT ASSEMBLY	1
G46710MRA106		ALIGNMENT PIN	2
G46710MRA200		SMALL TRANSITION DUCT WELDMENT ASSEMBLY	1

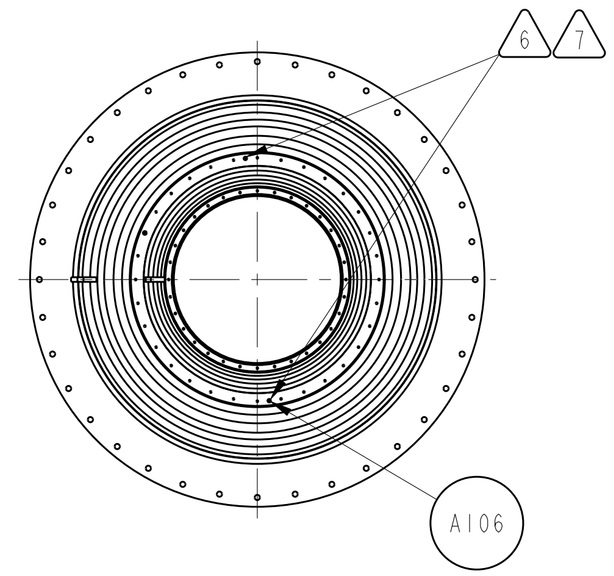

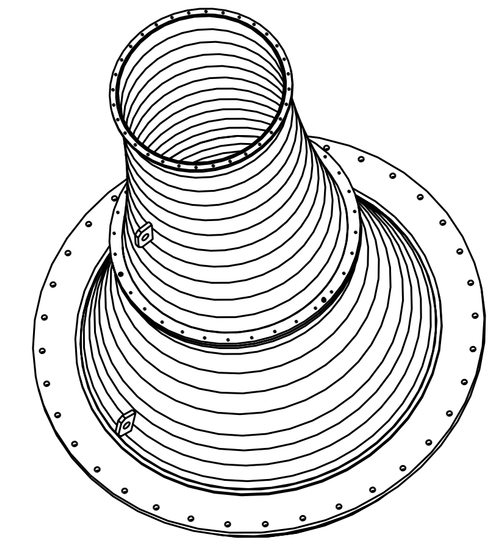

1. ORIENT ITEM A100 SO THAT THE WIDE END OF THE DUCT RESTS ON THE FLOOR.
2. LOWER ITEM A200 ONTO ITEM A100. ORIENT ITEM A200 SO THAT THE LIFTING LUGS OF BOTH DUCT SECTIONS ARE COPLANAR.
3. LOOSELY BOLT THE TWO DUCT SECTIONS TOGETHER USING 3/8"-16 X 2-3/4" LG. CAP SCREWS AND NUTS.
4. ADJUST ITEM A200 SO THAT THE INSIDE SURFACES OF THE TWO DUCTS LINE UP AS CLOSELY AS POSSIBLE. TIGHTEN CAP SCREWS.
5. HAND-GRIND INSIDE SURFACES OF DUCT SECTIONS AROUND INTERFACE AS NECESSARY TO OBTAIN A SMOOTH TRANSITION BETWEEN DUCT SECTIONS.
6. USING THE (2) .718 DIA. ALIGNMENT HOLES ON ITEM A200 AS PILOTS, DRILL (2) HOLES THRU BOTH FLANGES FOR A PRESS FIT WITH A .750 DIA. DOWEL PIN.
7. UNBOLT AND SEPARATE DUCT SECTIONS. OPEN UP THE (2) .750 DIA. HOLES IN ITEM A200 ONLY FOR A SNUG FIT (.0005-.0025 CLEARANCE) WITH A .750 DIA. DOWEL PIN.
8. PRESS ITEM A106 INTO FLANGE OF ITEM A100 AS SHOWN (2 PLACES).

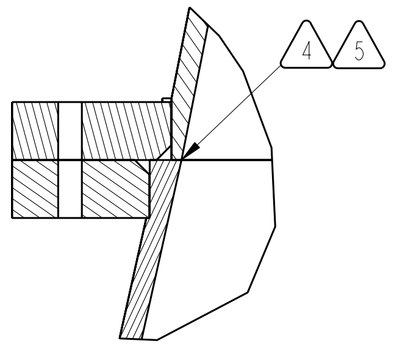

DETAIL A
SCALE 1/2

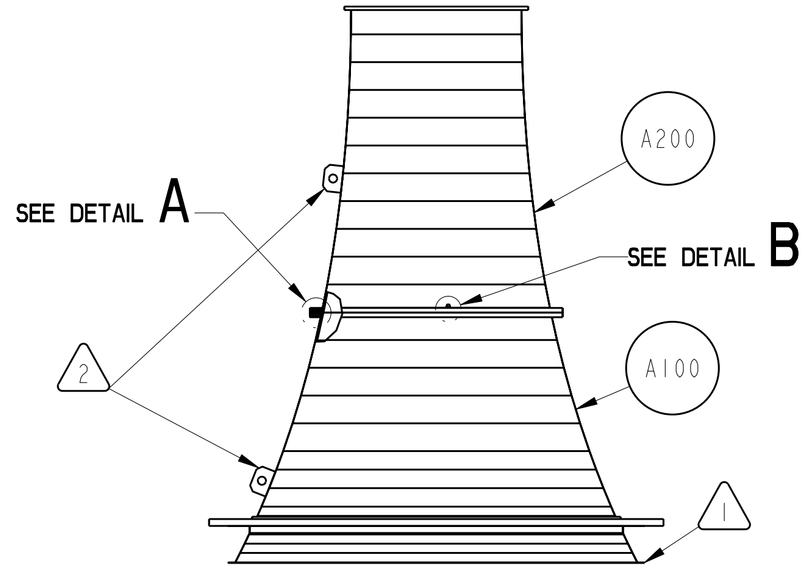

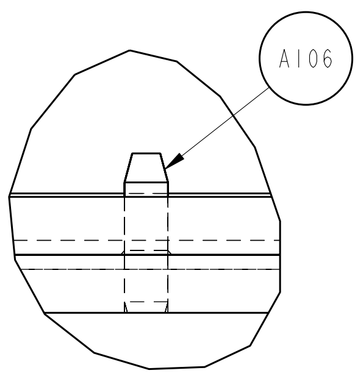

DETAIL B
SCALE 1/2
2 PLACES
8

CHG	ZONE	DESCRIPTION	APP/DATE

REVISIONS

PRIOR TO USE VERIFY THE INTENDED PURPOSE IN PDM ("FOR" ATTRIBUTE)

UNLESS OTHERWISE SPECIFIED DIMENSIONS ARE IN INCHES

CONTRACT NNC06BA07B
CONTRACTOR ASRC AEROSPACE

TOLERANCE ON		TASK ORDER	G467
.X	± 0.03	DRAFTER	ASRC/PN
.XX	± 0.01	ENGINEER	ASRC/PN
.XXX	± 0.005	DESIGNER	ASRC/PN
FRACTION	± -	DIMENSIONING AND TOLERANCING PER ASME Y14.5M-1994	
ANGULAR	± 0.50°		
BREAK EDGES	.010-.020		

NATIONAL AERONAUTICS AND SPACE ADMINISTRATION
JOHN H. GLENN RESEARCH CENTER
LEWIS FIELD
CLEVELAND, OHIO

PSL ICING TOP ASSEMBLY

G46710MRA000

A150 LARGE/SMALL TRANSITION DUCT MATCH ASSEMBLY

PDM REL LEVEL: PDM REVISION:
PDM DATABASE:
MODEL NAME: G46710MRA150_LG_SM_TRNS_MCH_ASM
CHECK FOR ANY OUTSTANDING ECO'S PRIOR TO USE

SIZE	DRAWING NUMBER	REV	BLDG	AREA
D	G46710MRA150	-	125	-
			UNITS: INCH	
SCALE: 1/25	INITIAL REL DATE 3/15/2011	SHEET 1 OF 1	DISCIPLINE MECHANICAL	

PRO/E VERSION: Wildfire 3.0

SIZE D DRAWING NUMBER G46710MRA150 REV -

NAME:PANEWMAN OBJECT:G46710MRA150_LG_SM_TRNS_MCH_ASM DATE:28-Mar-11 09:45:37