1. MATERIAL: 304 OR 304L STAINLESS STEEL PER ASTM A240.

2. QTY.: (8) REQUIRED

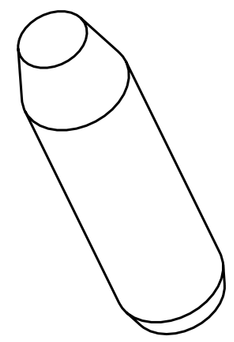

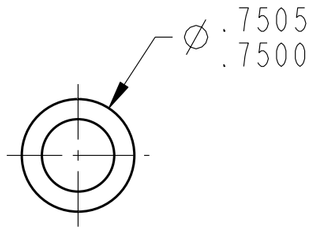

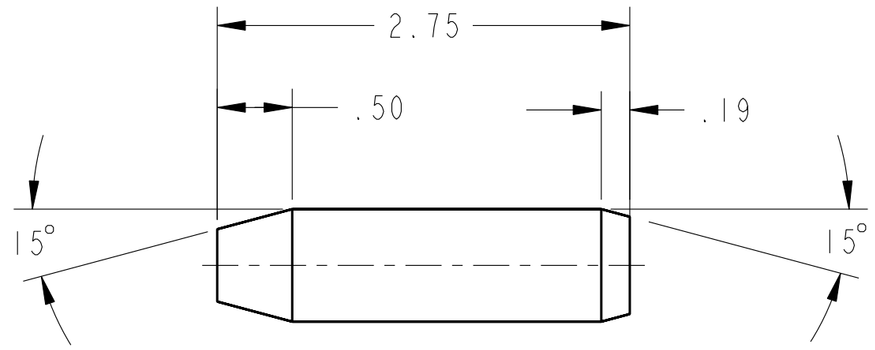

CHG	ZONE	DESCRIPTION	APP/DATE

REVISIONS

PRIOR TO USE VERIFY THE INTENDED PURPOSE IN PDM ("FOR" ATTRIBUTE)

UNLESS OTHERWISE SPECIFIED DIMENSIONS ARE IN INCHES

TOLERANCE ON	
.X	± 0.03
.XX	± 0.01
.XXX	± 0.005
FRACTION	± -
ANGULAR	± 0.50°
BREAK EDGES	.010-.020

DIMENSIONING AND TOLERANCING PER ASME Y14.5M-1994

CONTRACT	NNC06BA07B
CONTRACTOR	ASRC AEROSPACE
TASK ORDER	G467
DRAFTER	ASRC/PN
ENGINEER	ASRC/PN
DESIGNER	ASRC/PN

NATIONAL AERONAUTICS AND SPACE ADMINISTRATION
JOHN H. GLENN RESEARCH CENTER
LEWIS FIELD
CLEVELAND, OHIO

DUCT SECTION MATCH ASSEMBLIES

VARIOUS

A106

ALIGNMENT PIN

PDM REL LEVEL: PDM REVISION:

PDM DATABASE:

MODEL NAME: G46710MRA106_ALIGNMENT_PIN

CHECK FOR ANY OUTSTANDING ECO'S PRIOR TO USE

SIZE	DRAWING NUMBER	REV	BLDG	AREA
C	G46710MRA106	-	125	-

UNITS: INCH

SCALE:	INITIAL REL DATE	SHEET	DISCIPLINE
1/1	3/15/2011	1 OF 1	MECHANICAL

PRO/E VERSION: Wildfire 3.0

SIZE C DRAWING NUMBER G46710MRA106 REV -

NAME:PANEWMAN OBJECT:G46710MRA106_ALIGNMENT_PIN DATE:12-Jul-11 11:14:39