1. MATERIAL: 304L STAINLESS STEEL PER ASTM A240.

2. PART CAN BE MADE FROM MULTIPLE SECTIONS WELDED TOGETHER (WELDS MUST BE GROUND FLUSH ON ONE FACE).

3. ALL WELDS TO BE FULL PENETRATION.

4. WELDER TO BE QUALIFIED AND CERTIFIED PER AWS D17.1, SECTION 4.

5. WELD PER AWS D17.1, CLASS B. INSPECT PER AWS D17.1, SECTION 6. CONTROL AND VERIFY WELD ROD/FILLER MATERIAL PER NASA STD-5006. CERTIFICATE OF CONFORMANCE REQUIRED FOR WELD ROD/FILLER MATERIAL.

6. THERMAL STRESS RELIEVE AFTER WELDING.

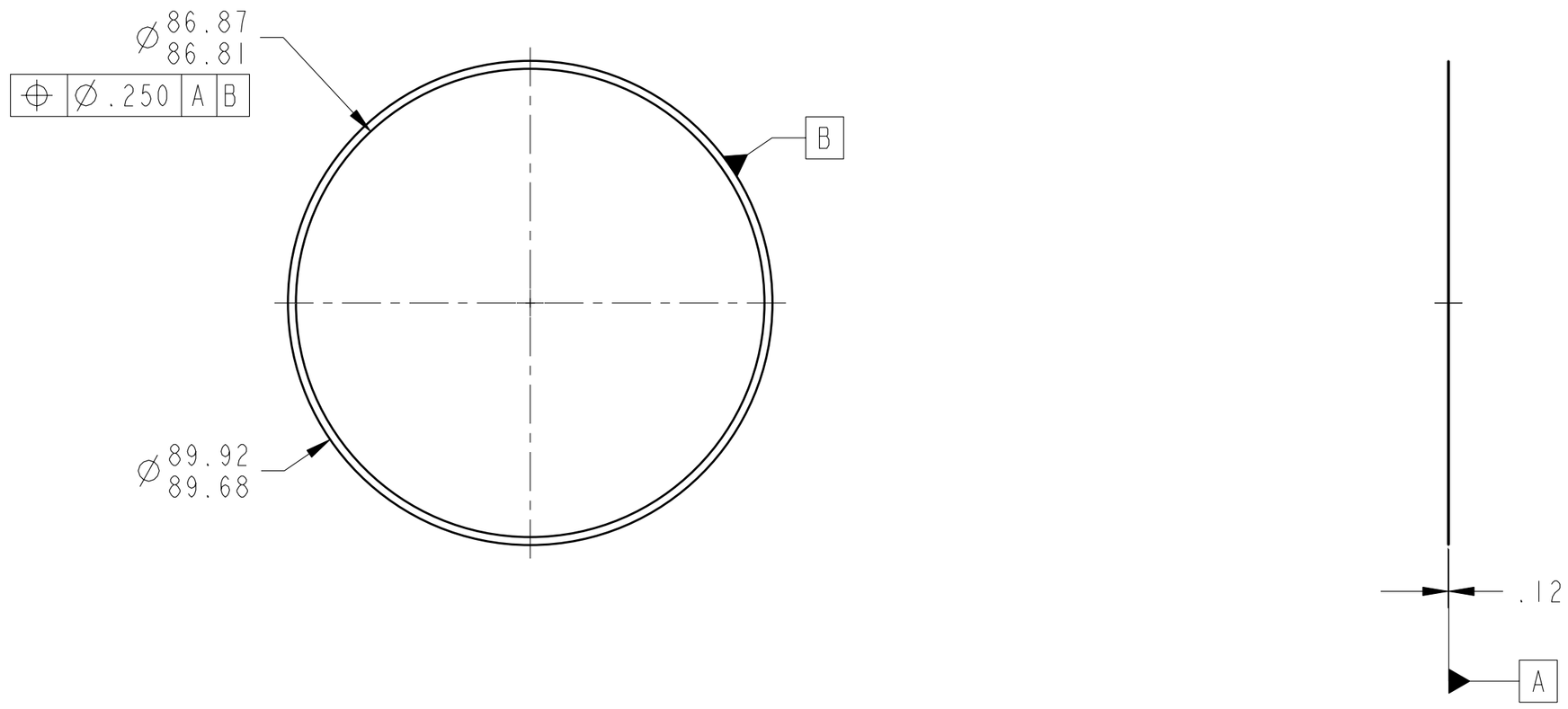

CHG	ZONE	DESCRIPTION	APP/DATE

REVISIONS

PRIOR TO USE VERIFY THE INTENDED PURPOSE IN PDM ("FOR" ATTRIBUTE)

UNLESS OTHERWISE SPECIFIED DIMENSIONS ARE IN INCHES		CONTRACT	NNC06BA07B
		CONTRACTOR	ASRC AEROSPACE
TOLERANCE ON		TASK ORDER	G467
.X	± 0.03	DRAFTER	ASRC/PN
.XX	± 0.01	ENGINEER	ASRC/PN
.XXX	± 0.005	DESIGNER	ASRC/PN
FRACTION	± -	DIMENSIONING AND TOLERANCING PER ASME Y14.5M-1994	
ANGULAR	± 0.50°		
BREAK EDGES	.010-.020		

PDM REL LEVEL: PDM REVISION:

PDM DATABASE:

MODEL NAME: G46710MRA104_BELLMOUTH_LIP

CHECK FOR ANY OUTSTANDING ECO'S PRIOR TO USE

NATIONAL AERONAUTICS AND SPACE ADMINISTRATION
JOHN H. GLENN RESEARCH CENTER
LEWIS FIELD
CLEVELAND, OHIO

LARGE TRANSITION DUCT
WELDMENT ASSEMBLY

G46710MRA100

A104 BELLMOUTH LIP

SIZE	DRAWING NUMBER	REV	BLDG	AREA
C	G46710MRA104	-	125	-
			UNITS: INCH	
SCALE: 1/25	INITIAL REL DATE 11/23/2010	SHEET 1 OF 1	DISCIPLINE MECHANICAL	

PRO/E VERSION: Wildfire 3.0

SIZE C DRAWING NUMBER G46710MRA104 REV -

NAME:PANEWMAN OBJECT:G46710MRA104_BELLMOUTH_LIP DATE:14-Apr-11 13:11:29