1. MATERIAL: 304L STAINLESS STEEL PER ASTM A240.

2. DRILL HOLES AFTER STRESS RELIEF PER DRAWING G46710MRA100.

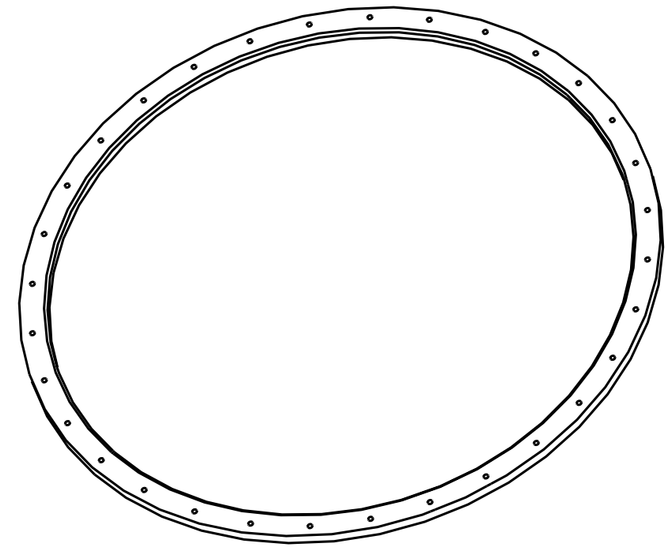

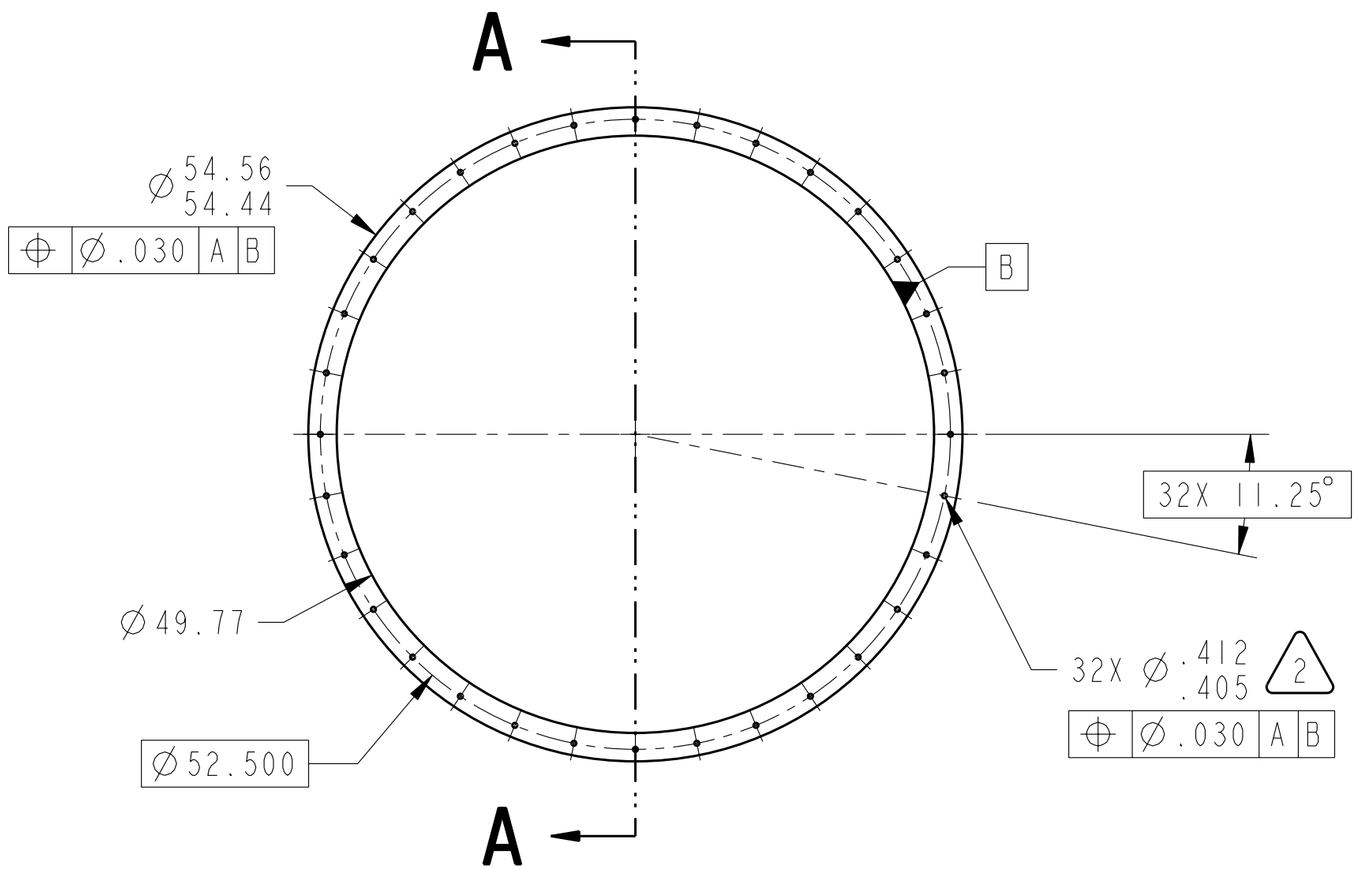

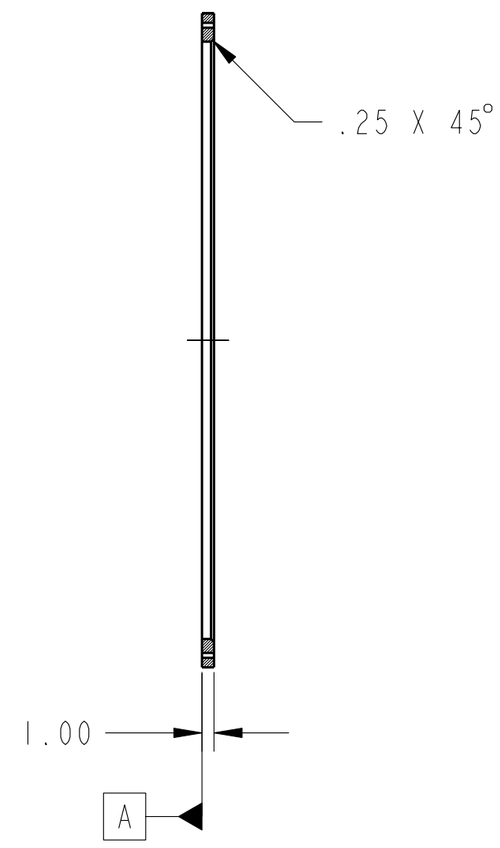

SECTION A-A

CHG	ZONE	DESCRIPTION	APP/DATE

REVISIONS

PRIOR TO USE VERIFY THE INTENDED PURPOSE IN PDM ("FOR" ATTRIBUTE)

UNLESS OTHERWISE SPECIFIED DIMENSIONS ARE IN INCHES		CONTRACT NNC06BA07B CONTRACTOR ASRC AEROSPACE	
TOLERANCE ON		TASK ORDER	G467
.X	± 0.03	DRAFTER	ASRC/PN
.XX	± 0.01	ENGINEER	ASRC/PN
.XXX	± 0.005	DESIGNER	ASRC/PN
FRACTION	± -	DIMENSIONING AND TOLERANCING PER ASME Y14.5M-1994	
ANGULAR	± 0.50°		
BREAK EDGES	.010-.020		

NATIONAL AERONAUTICS AND SPACE ADMINISTRATION
JOHN H. GLENN RESEARCH CENTER
LEWIS FIELD
CLEVELAND, OHIO

LARGE TRANSITION
DUCT WELDMENT ASSEMBLY
G46710MRA100

A103 LARGE TRANSITION DUCT MATING FLANGE

PDM REL LEVEL: PDM REVISION:
PDM DATABASE:
MODEL NAME: G46710MRA103_LRG_TRNS_MTG_FLG
CHECK FOR ANY OUTSTANDING ECO'S PRIOR TO USE

SIZE	DRAWING NUMBER	REV	BLDG	AREA
C	G46710MRA103	-	125	-
			UNITS: INCH	
SCALE: 2/25	INITIAL REL DATE 11/23/2010	SHEET 1 OF 1	DISCIPLINE MECHANICAL	

PRO/E VERSION: Wildfire 3.0

SIZE C DRAWING NUMBER G46710MRA103 REV -

NAME:PANEWMAN OBJECT:G46710MRA103_LRG_TRNS_MTG_FLG DATE:14-Apr-11 12:53:45