DRAWING LIST

DRAWING NUMBER: DRAWING CODE	DRAWING NUMBER: BALLOON NO	DESCRIPTION	QTY/ ASSY
G46710MRA100		LARGE TRANSITION DUCT WELDMENT ASSEMBLY	1
G46710MRA101		LARGE TRANSITION DUCT	1
G46710MRA102		LARGE TRANSITION DUCT INSTALLATION FLANGE	1
G46710MRA103		LARGE TRANSITION DUCT MATING FLANGE	1
G46710MRA104		BELLMOUTH LIP	1
G46710MRA105		LIFT LUG	1
G46710MRA108		TRANSITION LIFT LUG SUPPORT	1

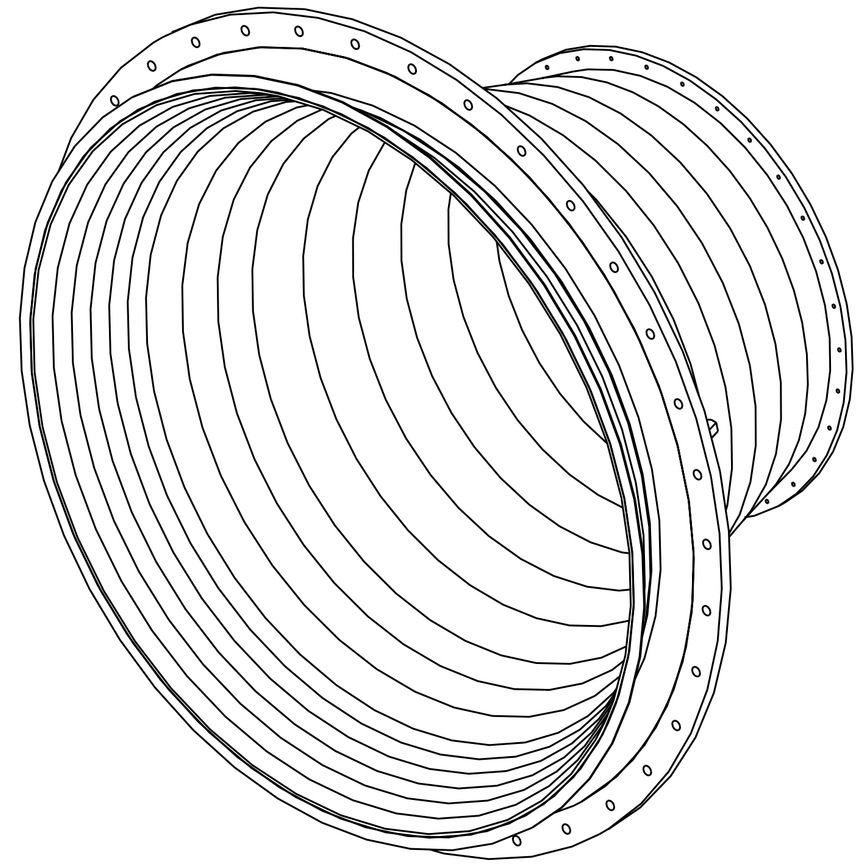

SCALE 2/25

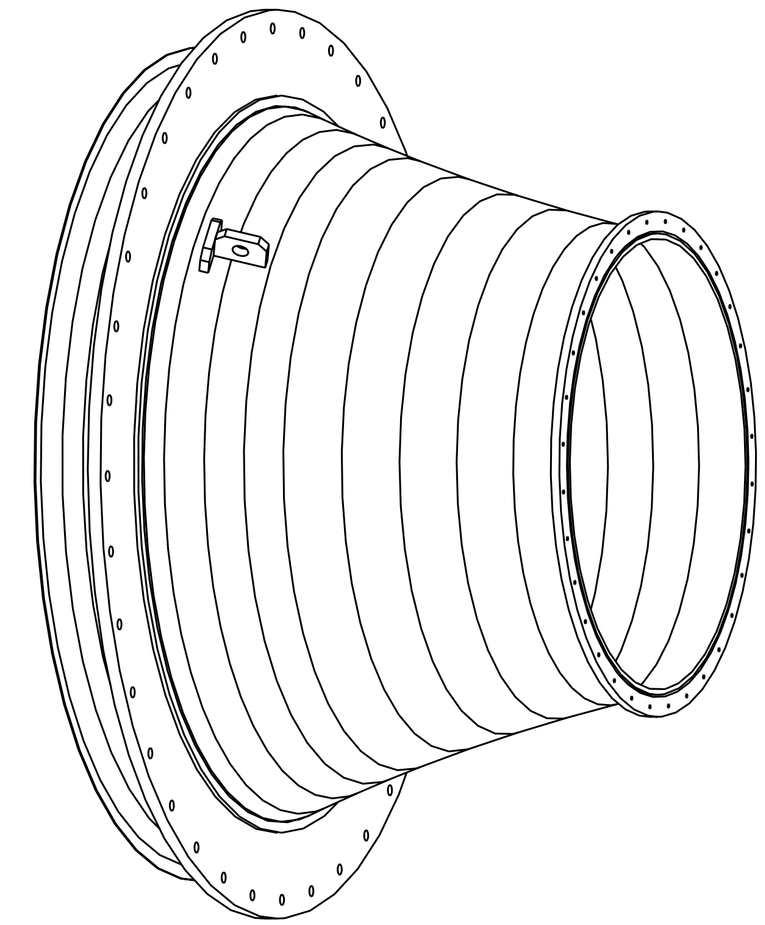

SCALE 2/25

1. ALL WELDS TO BE FULL PENETRATION.
2. WELDER TO BE QUALIFIED AND CERTIFIED PER AWS D17.1, SECTION 4.
3. WELD PER AWS D17.1, CLASS B. INSPECT PER AWS D17.1, SECTION 6. CONTROL AND VERIFY WELD ROD/FILLER MATERIAL PER NASA STD-5006. CERTIFICATE OF CONFORMANCE REQUIRED FOR WELD ROD/FILLER MATERIAL.
4. THERMAL STRESS RELIEVE AFTER WELDING AND BEFORE FINAL MACHINING.
5. VERIFY CHAMFERED SIDE OF FLANGE FACES OUTWARD BEFORE WELDING.
6. MACHINE FLANGE FACE AND HOLE PATTERN ON ITEM A102 PER DRAWING G46710MRA102 AFTER STRESS RELIEF. MACHINE HOLE PATTERN ON ITEM A103 PER DRAWING G46710MRA103 AFTER STRESS RELIEF. LIFT LUG COMPONENTS (ITEMS A105 AND A108) AND FLANGE HOLES TO BE ALIGNED WITH VERTICAL CENTERLINE WITHIN .030".

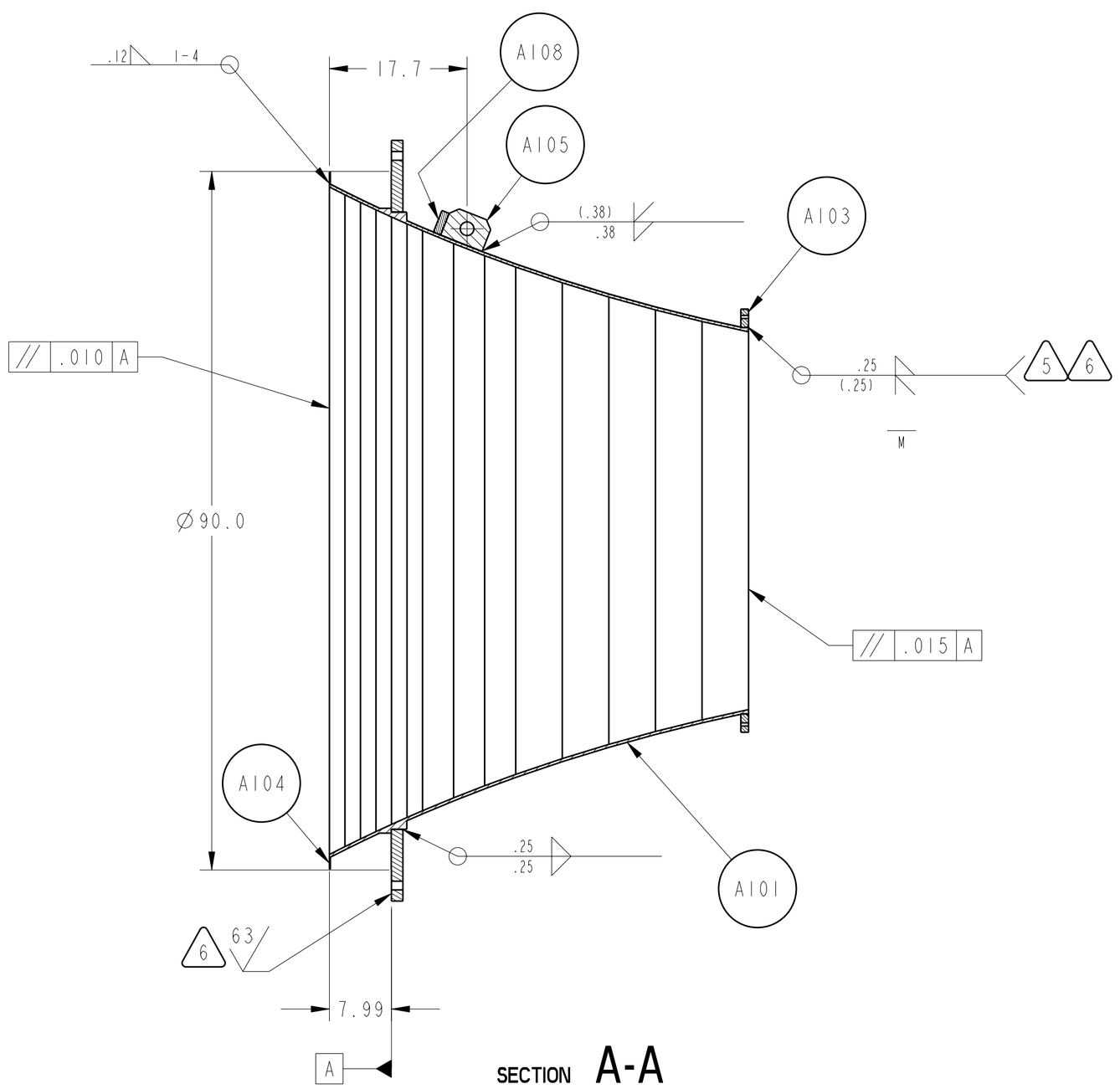

SECTION A-A

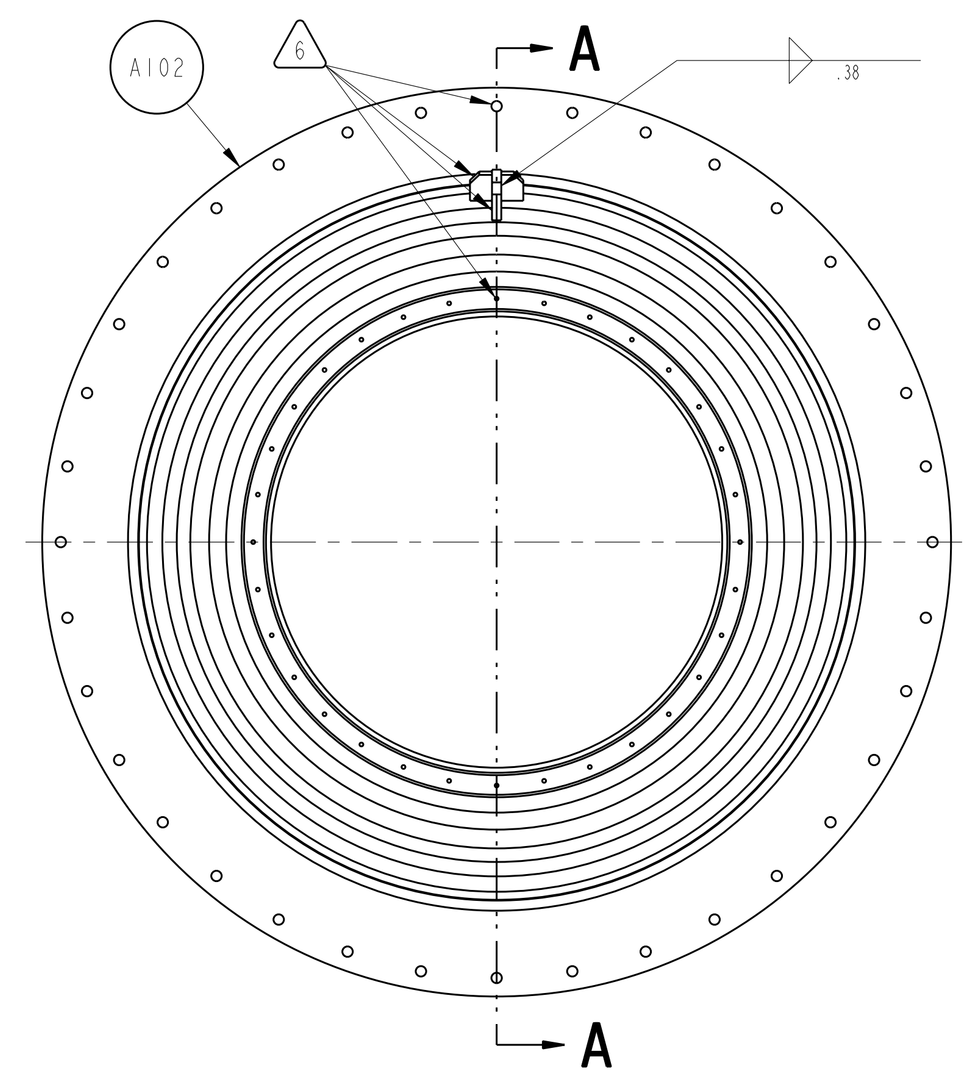

CHG	ZONE	DESCRIPTION	APP/DATE

REVISIONS

PRIOR TO USE VERIFY THE INTENDED PURPOSE IN PDM ("FOR" ATTRIBUTE)

UNLESS OTHERWISE SPECIFIED DIMENSIONS ARE IN INCHES		CONTRACT NNC06BA07B	
		CONTRACTOR ASRC AEROSPACE	
TOLERANCE ON		TASK ORDER	G467
.X	± 0.03	DRAFTER	ASRC/PN
.XX	± 0.01	ENGINEER	ASRC/PN
.XXX	± 0.005	DESIGNER	ASRC/PN
FRACTION	± -	DIMENSIONING AND TOLERANCING PER ASME Y14.5M-1994	
ANGULAR	± 0.50°		
BREAK EDGES	.010-.020		

NATIONAL AERONAUTICS AND SPACE ADMINISTRATION
JOHN H. GLENN RESEARCH CENTER
LEWIS FIELD
CLEVELAND, OHIO

LARGE/SMALL TRANSITION DUCT MATCH ASSEMBLY

G46710MRA150

A100 LARGE TRANSITION DUCT WELDMENT ASSEMBLY

PDM REL LEVEL: PDM REVISION:

PDM DATABASE:
MODEL NAME: G46710MRA100_LRG_TRANS_DUCT_ASM

CHECK FOR ANY OUTSTANDING ECO'S PRIOR TO USE

SIZE	DRAWING NUMBER	REV	BLDG	AREA
D	G46710MRA100	-	125	-
			UNITS: INCH	
SCALE: 2/25	INITIAL REL DATE 12/3/2010	SHEET 1 OF 1	DISCIPLINE MECHANICAL	

PRO/E VERSION: Wildfire 3.0

SIZE D DRAWING NUMBER G46710MRA100 REV -

NAME:PANEWMAN OBJECT:G46710MRA100_LRG_TRANS_DUCT_ASM DATE:02-May-11 09:12:06