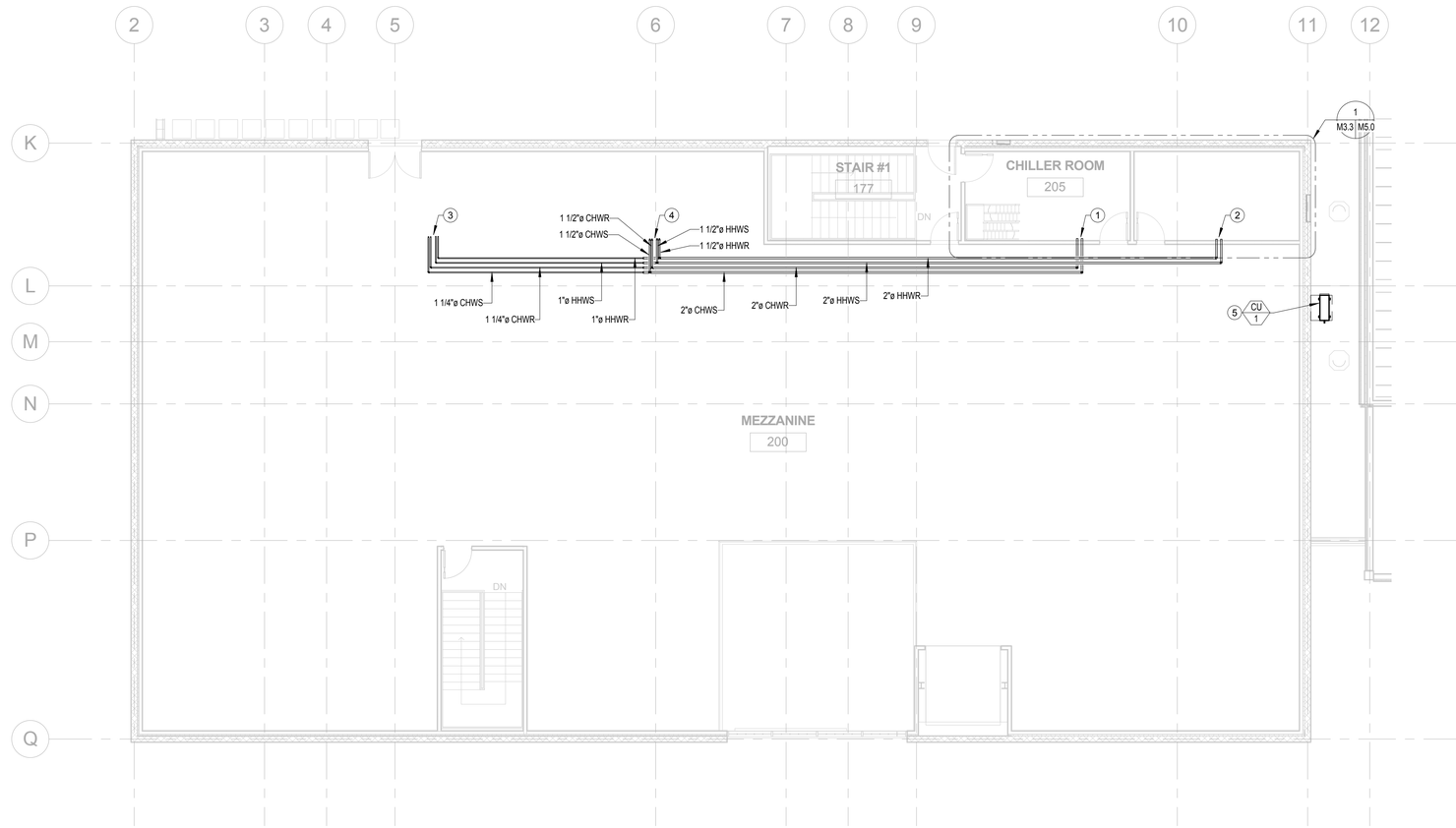

KEY NOTES

1. 2"CHWS & CHWR. FOR CONTINUATION, SEE ENLARGED PLAN 1/M5.0.
2. 2"HHWS & HHWR DN. FOR CONTINUATION, SEE ENLARGED PLAN 1/M5.0.
3. 1 1/4"CHWS & CHWR AND 1"HHWS & HHWR UP THRU ROOF TO IDEC-5.
4. 1 1/2"CHWS & CHWR AND 1 1/2"HHWS & HHWR UP THRU ROOF TO IDEC-6.
5. ROUTE REFRIGERANT LINES DN AND CONNECT TO FC-16 AS REQUIRED.

SCALE: 1/8" = 1'-0"

0 8 16 24 32

MECHANICAL PIPING MEZZANINE

SCALE: 1/8" = 1'-0"

REGISTERED PROFESSIONAL ENGINEER
DONN C. GILMORE
No. 11541
Exp. 9-30-11
MECHANICAL
STATE OF CALIFORNIA

DONN C. GILMORE & ASSOCIATES, INC.
Consulting Mechanical and Electrical Engineers
DCGA
4051 E. La Palma Ave., Ste. A
Anaheim, CA 92807
Ph.: 714.630.4291
Fax: 714.630.4805

DATE	SYM	REVISION	BY	A'PD

NATIONAL AERONAUTICS AND SPACE ADMINISTRATION

DRYDEN FLIGHT RESEARCH CENTER
EDWARDS, CA

DRAWING TITLE

MECHANICAL PIPING PLAN - MEZZANINE

PROJECT TITLE

FACILITIES SUPPORT CENTER BUILDING
100% FINAL DESIGN SUBMITTAL

APPROVALS	DATE
Chief, Facilities Engineering & Asset Mgmt Office **DAN CROWLEY**	4/14/11
Project Requestor /Customer **DAN CROWLEY**	4/14/11
Facilities Project Manager **GEMMA FLORES**	4/14/11
Chief, Office of Protective Services **JOHN ZELLMER**	4/14/11
Chief - Safety, Health, and Environmental Office **DAN MULLEN**	4/14/11
DFRC Chief Information Officer **KEN NORLIN**	4/14/11

DATE STRTD	11/08/10	DATE PRNTD	03/14/11
DRAWN BY		EDM-1703	
SCALE	AS NOTED	TRADE SH. No.	
FILE NAME		M3.3	SHEET No. 121 of 193

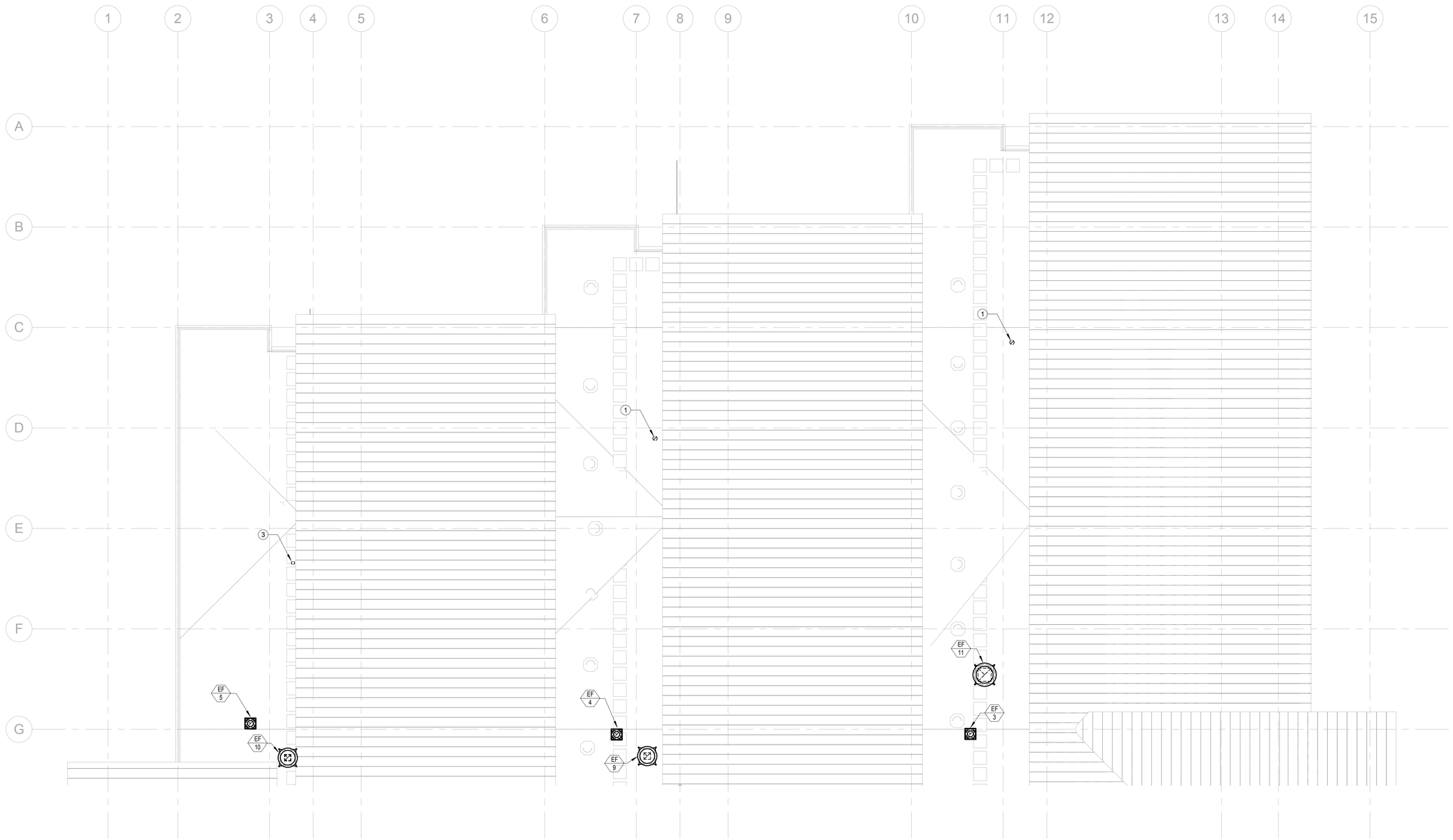

KEY NOTES

1. 8"ø OA DUCT UP, COMPLETE WITH BIRDSCREEN MESH. MAINTAIN MIN. 10'-0" CLEARANCE FROM ANY VENT AND EA DUCT.
2. 10"ø OA DUCT UP, COMPLETE WITH BIRDSCREEN MESH. MAINTAIN MIN. 10'-0" CLEARANCE FROM ANY VENT AND EA DUCT.
3. 6"ø OA DUCT UP, COMPLETE WITH BIRDSCREEN MESH. MAINTAIN MIN. 10'-0" CLEARANCE FROM ANY VENT AND EA DUCT.

SCALE: 1/16" = 1'-0"

0 16 32 48 64

MECHANICAL ROOF PLAN - NORTH SEGMENT

SCALE: 1/8" = 1'-0"

REGISTERED PROFESSIONAL ENGINEER
DONN C. GILMORE
No. 11541
Exp. 9-30-11
MECHANICAL
STATE OF CALIFORNIA

DONN C. GILMORE & ASSOCIATES, INC.
Consulting Mechanical and Electrical Engineers
DCGA
4051 E. La Palma Ave., Ste. A
Anaheim, CA 92807
Ph.: 714.630.4291
Fax: 714.630.4805

DATE	SYM	REVISION	BY	A'PD

NATIONAL AERONAUTICS AND SPACE ADMINISTRATION

DRYDEN FLIGHT RESEARCH CENTER
EDWARDS, CA

DRAWING TITLE

MECHANICAL ROOF PLAN - NORTH SEGMENT

PROJECT TITLE

FACILITIES SUPPORT CENTER BUILDING
100% FINAL DESIGN SUBMITTAL

APPROVALS	DATE
Chief, Facilities Engineering & Asset Mgmt. Office **DAN CROWLEY**	4/14/11
Project Requestor /Customer **DAN CROWLEY**	4/14/11
Facilities Project Manager **GEMMA FLORES**	4/14/11
Chief, Office of Protective Services **JOHN ZELLMER**	4/14/11
Chief - Safety, Health, and Environmental Office **DAN MULLEN**	4/14/11
DFRC Chief Information Officer **KEN NORLIN**	4/14/11

DATE STRTD	11/08/10	DATE PRNTD	03/14/11
DRAWN BY		EDM-1703	
SCALE	AS NOTED	TRADE SH. No.	
FILE NAME		M4.0	SHEET No. 122 of 193

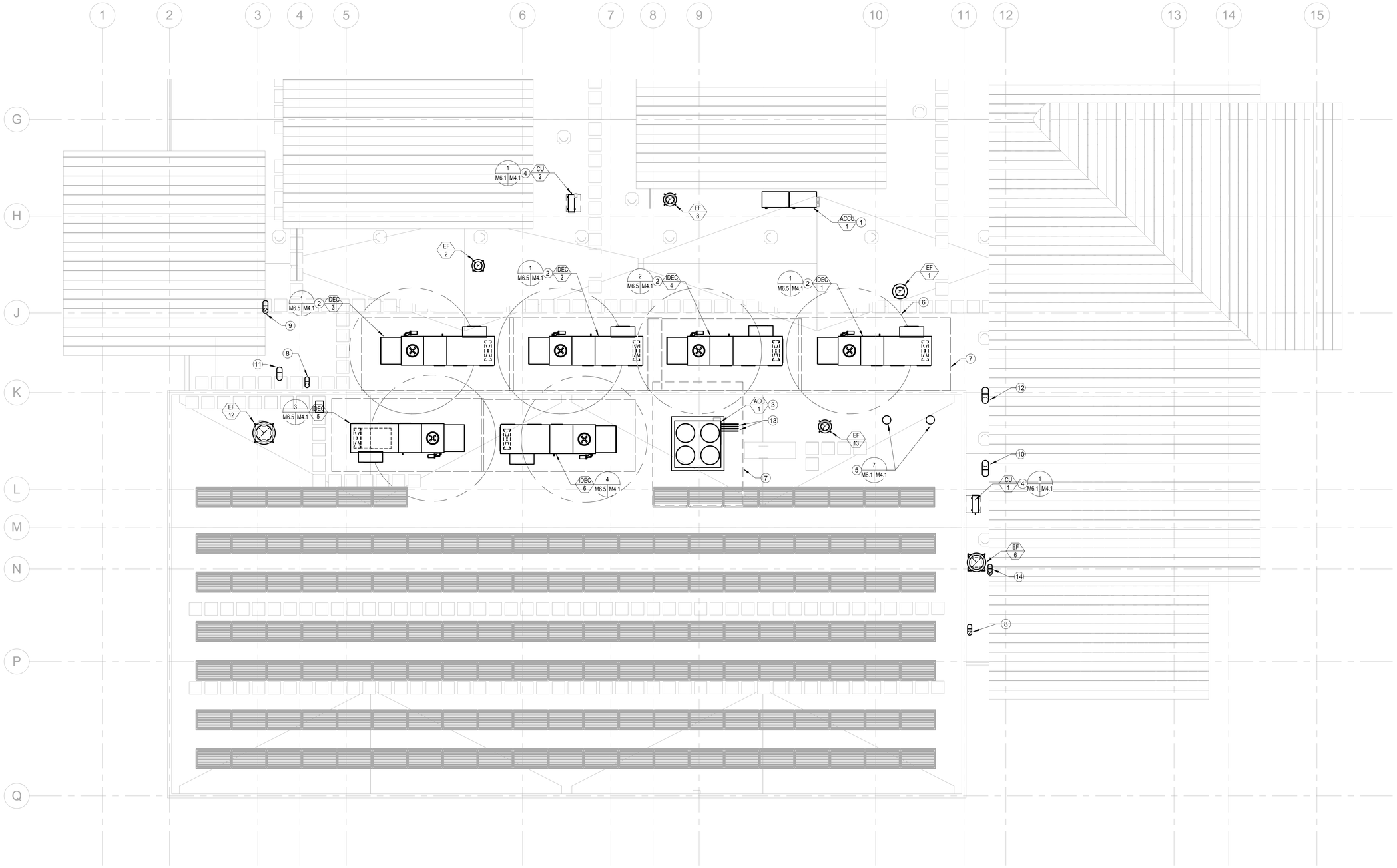

KEY NOTES

1. HEAT RECOVERY HEAT PUMP MOUNTED ON CONCRETE PAD.
2. IDEC UNIT MOUNTED ON PRE-FAB CURB.
3. AIR COOLED CONDENSER MOUNTED ON CONCRETE PAD.
4. AIR COOLED CONDENSING UNIT MOUNTED ON CONCRETE PAD.
5. 8"ø FLUE VENT CAP.
6. INDICATES MINIMUM 10'-0" CLEARANCE FROM ANY EXHAUST OR VENT OUTLETS, TYP.
7. INDICATES MINIMUM SERVICE CLEARANCE, TYP.
8. 8"ø OA DUCT, COMPLETE WITH BIRDSCREEN MESH. MAINTAIN MIN. 10'-0" CLEARANCE FROM ANY VENT AND EA DUCT.
9. 10"ø OA DUCT, COMPLETE WITH BIRDSCREEN MESH. MAINTAIN MIN. 10'-0" CLEARANCE FROM ANY VENT AND EA DUCT.
10. 12"ø OA DUCT, COMPLETE WITH BIRDSCREEN MESH. MAINTAIN MIN. 10'-0" CLEARANCE FROM ANY VENT AND EA DUCT.
11. 10"ø EA DUCT, COMPLETE WITH BIRDSCREEN MESH.
12. 12"ø OA DUCT, COMPLETE WITH BIRDSCREEN MESH.
13. 1 1/8" R/S & 5/8"R/L REFRIGERANT LINES DN.
14. 8"ø EA GOOSENECK DUCT COMPLETE WITH BIRDSCREEN MESH.

MECHANICAL ROOF PLAN - SOUTH SEGMENT

SCALE: 1/8" = 1'-0"

REGISTERED PROFESSIONAL ENGINEER
DONN C. GILMORE
No. 11541
Exp. 9-30-11
MECHANICAL
STATE OF CALIFORNIA

DONN C. GILMORE & ASSOCIATES, INC.
Consulting Mechanical and Electrical Engineers
DCGA
4051 E. La Palma Ave., Ste. A
Anaheim, CA 92807
Ph.: 714.630.4291
Fax: 714.630.4805

DATE	SYM	REVISION	BY	A'PD

NATIONAL AERONAUTICS AND SPACE ADMINISTRATION

DRYDEN FLIGHT RESEARCH CENTER
EDWARDS, CA

DRAWING TITLE

MECHANICAL ROOF PLAN - SOUTH SEGMENT

PROJECT TITLE

FACILITIES SUPPORT CENTER BUILDING
100% FINAL DESIGN SUBMITTAL

APPROVALS	DATE
Chief, Facilities Engineering & Asset Mgmt Office DAN CROWLEY	4/14/11
Project Requestor /Customer DAN CROWLEY	4/14/11
Facilities Project Manager GEMMA FLORES	4/14/11
Chief, Office of Protective Services JOHN ZELLMER	4/14/11
Chief - Safety, Health, and Environmental Office DAN MULLEN	4/14/11
DFRC Chief Information Officer KEN NORLIN	4/14/11

DATE STRTD	11/08/10	DATE PRNTD	03/14/11
DRAWN BY		TRADE SH. No.	EDM-1703
SCALE	AS NOTED		
FILE NAME		M4.1	SHEET No. 123 of 193

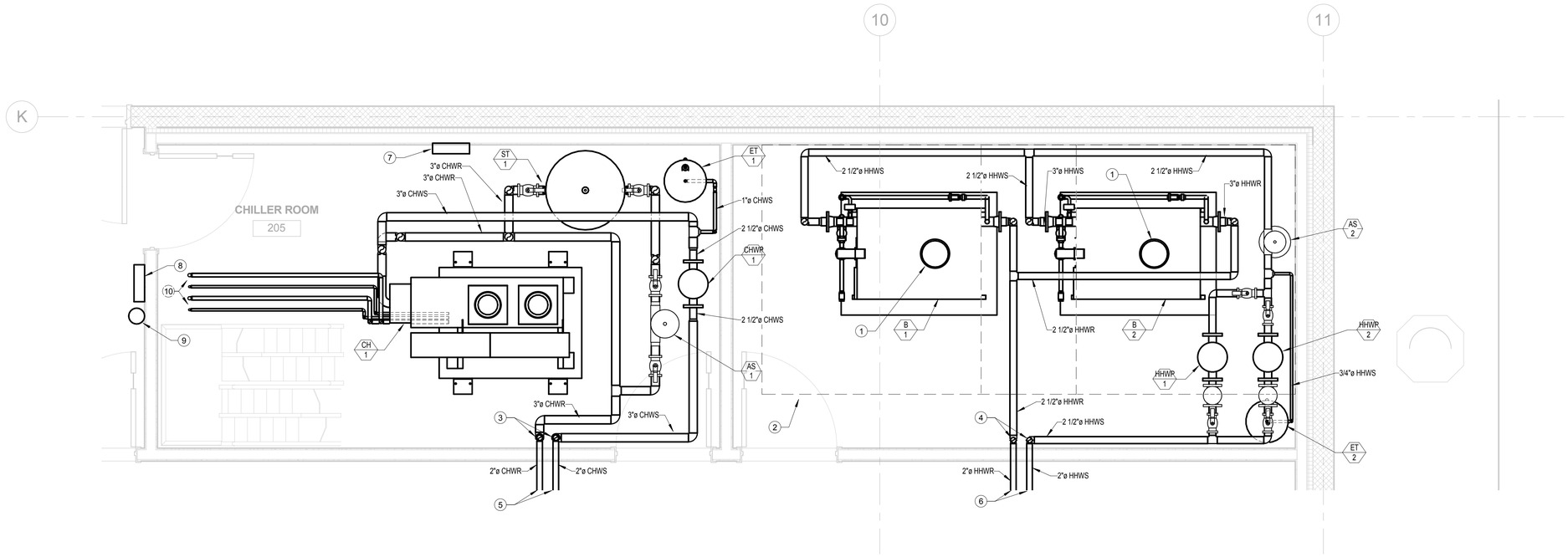

KEY NOTES

1. 8"ø FLUE VENT UP THRU ROOF, COMPLETE WITH ROOF VENT CAP.
2. INDICATES MINIMUM SERVICE CLEARANCE.
3. 2"CHWS & CHWR.
4. 2"HHWS & HHWR.
5. 2"CHWS & CHWR. FOR CONTINUATION, SEE MECHANICAL SHEET M3.3.
6. 2"HHWS & HHWR. FOR CONTINUATION, SEE MECHANICAL SHEET M3.3.
7. PHOTOACOUSTIC INFRARED REFRIGERANT MONITOR WITH INTEGRAL VISUAL, AND AUDIBLE ALARM, 120V.
8. REMOTE REFRIGERANT DISPLAY MODULE.
9. REMOTE COMBINATION STROBE LIGHT AND AUDIBLE ALARM, 120V.
10. 1 1/8"R/S AND 5/8"R/L REFRIGERANT LINES UP THRU ROOF AND CONNECT TO ACC-1 AS REQUIRED.

CHILLER ROOM VENTILATION

VENTILATION SYSTEM SIZED BY CALIFORNIA MECHANICAL CODE, 2007, SECTION 1108

1108.2.2 CONTINUOUSLY EXHAUST AT 0.5 CFM PER GROSS FLOOR AREA

CHILLER ROOM GROSS AREA = 170 SQUARE FEET
Q = 0.5 x Agf = .5 x 170 SF
Q = 85 CFM EXHAUST AIR

1108.2.3 LIMIT TEMPERATURE RISE TO MAX 104°F

THE MAXIMUM OUTSIDE AIR SUMMER TEMPERATURE IS 92° F.

TOTAL HEAT REJECTION FROM ONE CHILLER: 0 BTUH
TOTAL HEAT REJECTION FROM ONE PUMP: 0 BTUH

q (TOTAL LOAD) = 600 BTUH

$$Q = \frac{q}{\Delta T \times 1.08} = \frac{600}{20 \times 1.08} = 28 \text{ CFM SUPPLY AIR}$$

1108.2.4 EMERGENCY PURGE OF ESCAPING REFRIGERANT

Q = 100 G
G (LARGEST SYSTEM) = CH-1 = 44 LBS
Q = 100 44 = 660 CFM EXHAUST AIR

NOTES

1. REFRIGERANT MONITORING SYSTEM SHALL BE 'TRANE TRUESENSE SD'.

CHILLER ROOM VENTILATION SEQUENCE OF OPERATION

A. EXHAUST FAN, EF-13, ECM MOTOR SHALL BE SET FOR A MINIMUM AND MAXIMUM AIR FLOW OF 85 CFM AND 660 CFM RESPECTIVELY.
B. A STANDALONE DDC CONTROL PANEL WILL RECEIVE INPUTS FROM THE PRESSURE DIFFERENTIAL SENSOR AND THE CHILLER ROOM TEMPERATURE SENSOR.
   1. THE PRESSURE DIFFERENTIAL SENSOR WILL SEND SIGNAL TO DDC PANEL TO MODULATE MOTORIZED DAMPER CLOSE AS REQUIRED TO MAINTAIN DIFFERENTIAL PRESSURE OF 0.05" BETWEEN CHILLER ROOM AND ADJACENT AREA.
   2. THE CHILLER ROOM TEMPERATURE SENSOR WILL SEND SIGNAL TO DDC PANEL.
C. UPON A REFRIGERANT SPILL IN THE CHILLER ROOM, A RELAY IN EITHER OF THE TWO SENSOR MODULES WILL CLOSE, ENERGIZING CONTROL CIRCUIT TO SIGNAL EXHAUST FAN VFD TO GO TO MAXIMUM AIR FLOW OF 660 CFM.

ENLARGED MECHANICAL CHILLER/BOILER ROOM PLAN

SCALE: 1/2" = 1'-0" | 1 | M3.3 | M5.0

REGISTERED PROFESSIONAL ENGINEER DONN C. GILMORE No. 11541 Exp. 9-30-11 MECHANICAL STATE OF CALIFORNIA

DONN C. GILMORE & ASSOCIATES, INC.
Consulting Mechanical and Electrical Engineers
DCGA
4051 E. La Palma Ave., Ste. A
Anaheim, CA 92807
Ph.: 714.630.4291
Fax: 714.630.4805

DATE	SYM	REVISION	BY	A'PD

NATIONAL AERONAUTICS AND SPACE ADMINISTRATION
DRYDEN FLIGHT RESEARCH CENTER
EDWARDS, CA

DRAWING TITLE
MECHANICAL ENLARGED PLAN

PROJECT TITLE
FACILITIES SUPPORT CENTER BUILDING
100% FINAL DESIGN SUBMITTAL

APPROVALS	DATE
Chief, Facilities Engineering Branch, Asset Mgmt Office DAN CROWLEY	4/14/11
Project Requestor /Customer DAN CROWLEY	4/14/11
Facilities Project Manager GEMMA FLORES	4/14/11
Chief, Office of Protective Services JOHN ZELLMER	4/14/11
Chief - Safety, Health, and Environmental Office DAN MULLEN	4/14/11
DFRC Chief Information Officer KEN NORLIN	4/14/11

DATE STRTD	11/08/10	DATE PRNTD	03/14/11
DRAWN BY			EDM-1703
SCALE	AS NOTED	TRADE SH. No.	
FILE NAME		M5.0	SHEET No. 124 of 193

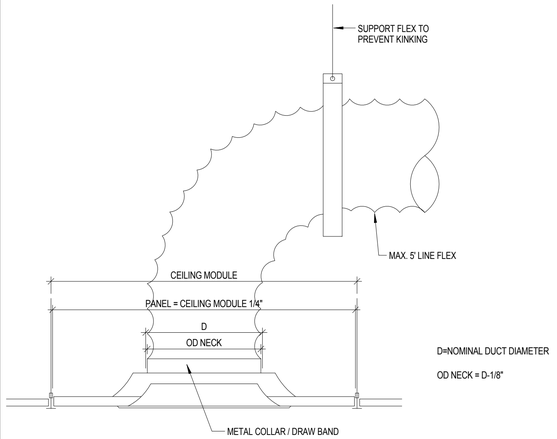

CEILING DIFFUSER DETAIL | SCALE: NONE | 1 M2.1 M6.0

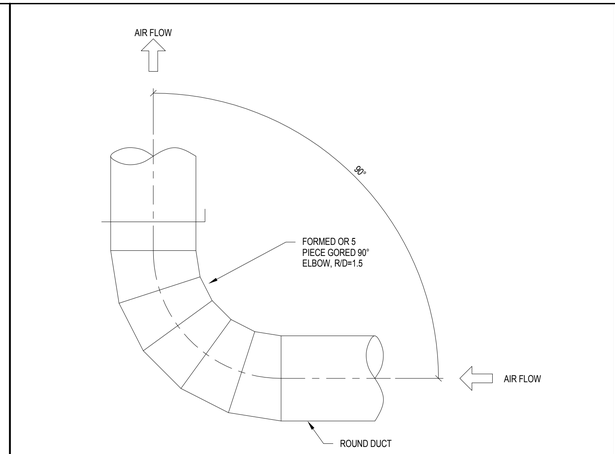

90 DEG. TURN - ROUND DUCT DETAIL | SCALE: NONE | 2 M2.1 M6.0

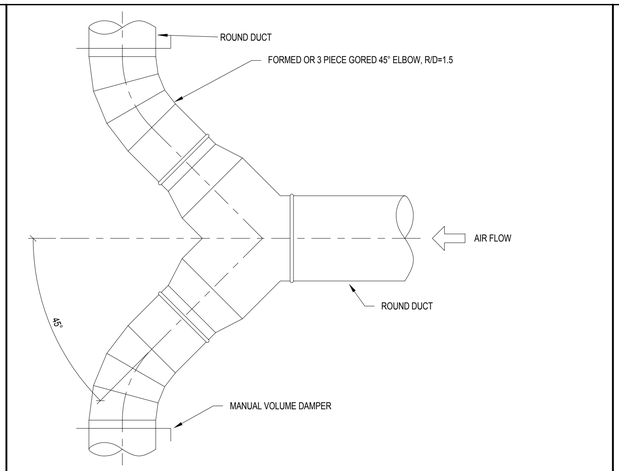

SUPPLY DUCT - ROUND TO ROUND | SCALE: NONE | 3 M2.1 M6.0

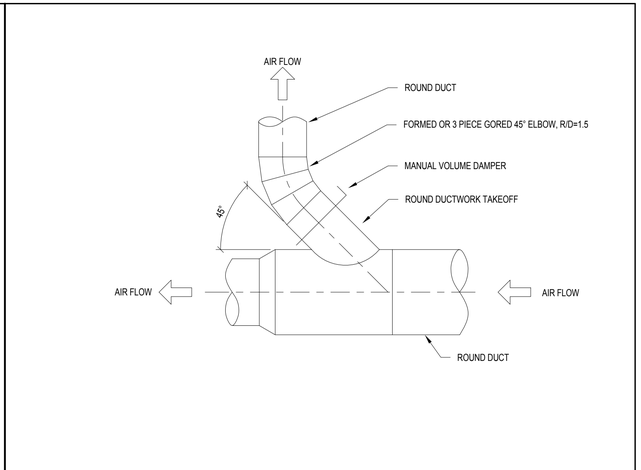

SUPPLY DUCT - ROUND TO ROUND | SCALE: NONE | 4 M2.1 M6.0

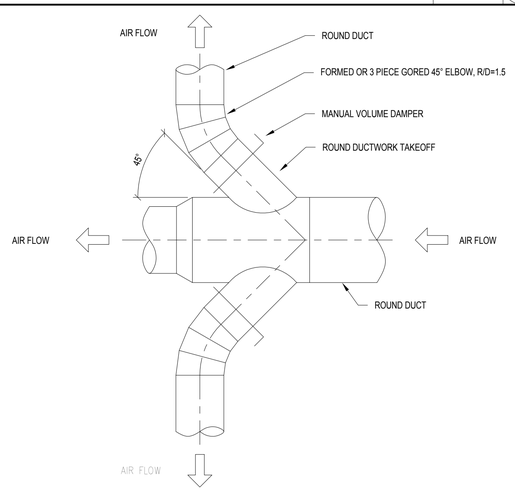

SUPPLY DUCT - ROUND TO ROUND | SCALE: NONE | 5 M2.1 M6.0

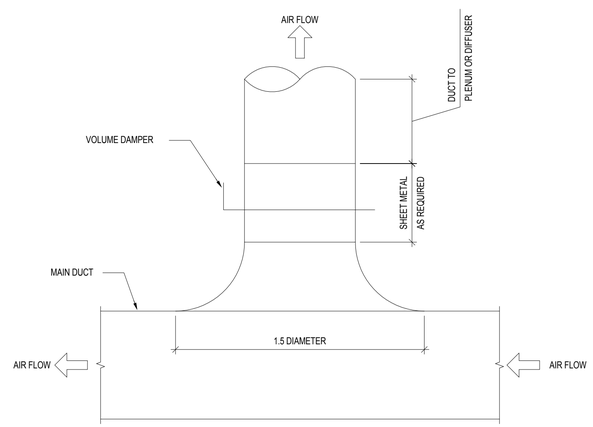

ROUND SUPPLY DUCT CONN. DETAIL | SCALE: NONE | 6 M2.1 M6.0

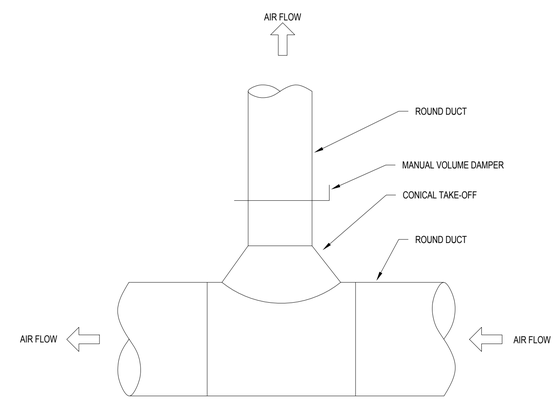

SUPPLY BRANCH - CONICAL DETAIL | SCALE: NONE | 7 M2.1 M6.0

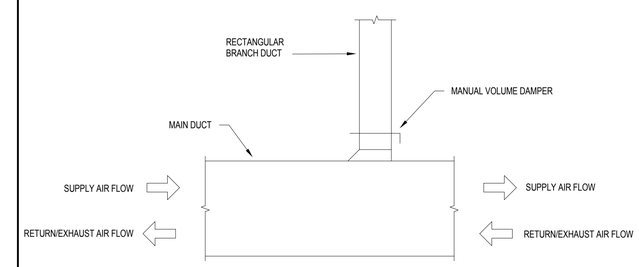

RECT. DUCT BRANCH CONN. DETAIL | SCALE: NONE | 8 M2.2 M6.0

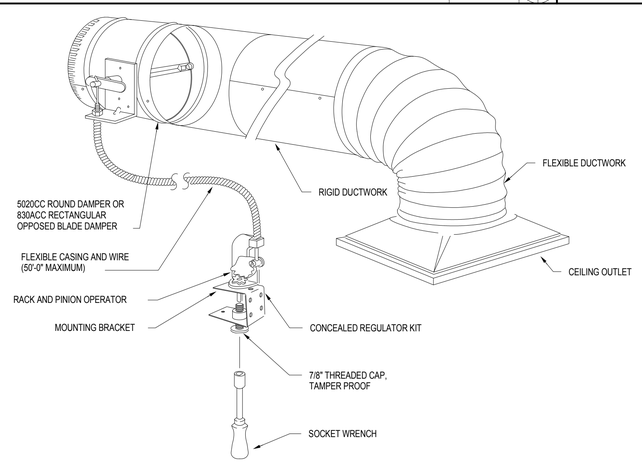

YOUNGS REGULATOR CONTROL DETAIL | SCALE: NONE | 9 M2.2 M6.0

270-896 BOWDEN CABLE CONTROL SYSTEM

NOTE:

1) COORDINATE EXACT LOCATION OF CEILING MOUNTED CONCEALED REGULATOR WITH ARCHITECT PRIOR TO INSTALLATION.

2) THE 270-896 BOWDEN CABLE CONTROL SYSTEM IS DESIGNED TO BE IMBEDDED IN THE CEILING FLUSH WITH THE FINISHED SURFACE.

3) CABLE SHALL CONSIST OF BOWDEN CABLE 0.054" STAINLESS STEEL CONTROL WIRE ENCAPSULATED IN 1/16" FLEXIBLE GALVANIZED SPIRAL WIRE SHEATH.

4) LOCKING RACK AND PINION GEAR DRIVE SHALL BE CONSTRUCTED OF 14 GAUGE STEEL AND SHALL BE USED TO CONVERT ROTARY MOTION INTO PUSH-PULL MOTION.

5) CONTROL SHAFT SHALL BE "D"-STYLE FLATTENED 1/4" DIAMETER WITH 265° ROTATION PROVIDING 1-1/2" LINEAR TRAVEL CAPABILITY.

REGISTERED PROFESSIONAL ENGINEER
DONN C. GILMORE
No. 11541
Exp. 9-30-11
MECHANICAL
STATE OF CALIFORNIA

DONN C. GILMORE & ASSOCIATES, INC.
Consulting Mechanical and Electrical Engineers
DCGA
4051 E. La Palma Ave., Ste. A
Anaheim, CA 92807
Ph.: 714.630.4291
Fax: 714.630.4805

DATE	SYM	REVISION	BY	A'PD

NATIONAL AERONAUTICS AND SPACE ADMINISTRATION

DRYDEN FLIGHT RESEARCH CENTER
EDWARDS, CA

DRAWING TITLE

MECHANICAL DETAILS

PROJECT TITLE

FACILITIES SUPPORT CENTER BUILDING
100% FINAL DESIGN SUBMITTAL

APPROVALS		DATE
Chief, Facilities Engineering & Asset Mgmt Office DAN CROWLEY		4/14/11
Project Requestor /Customer DAN CROWLEY		4/14/11
Facilities Project Manager GEMMA FLORES		4/14/11
Chief, Office of Protective Services JOHN ZELLMER		4/14/11
Chief - Safety, Health, and Environmental Office DAN MULLEN		4/14/11
DFRC Chief Information Officer KEN NORLIN		4/19/11

DATE STRTD	11/08/10	DATE PRNTD	03/04/11
DRAWN BY			EDM-1703
SCALE	AS NOTED	TRADE SH. No.	
FILE NAME		M6.0	SHEET No. 125 of 193

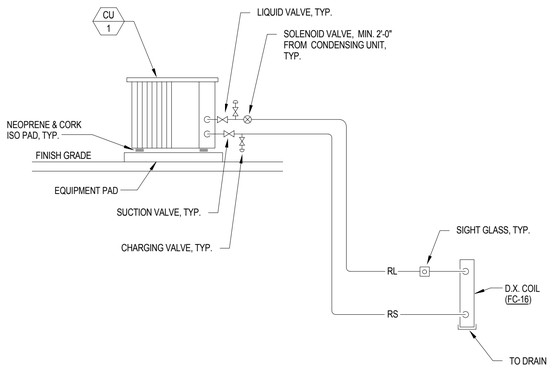

CONDENSING UNIT DETAIL

SCALE: NONE | 1 | M4.1 | M6.1

KEY NOTES:

1. DRAIN LINE SHALL BE AT LEAST THE SAME SIZE AS THE NIPPLE ON THE DRAIN PAN OR AS INDICATED ON THE PLANS.
2. SLOPE CONDENSATE DRAIN TO APPROVED RECEPTOR AT 1/8" PER LINEAR FOOT.
3. PROVIDE UNIONS ON TRAP.

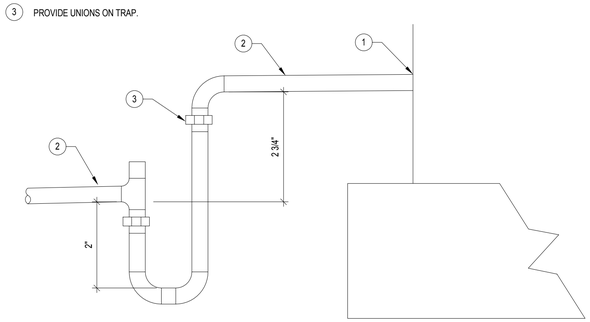

CONDENSATE DRAIN DETAIL

SCALE: NONE | 2 | M6.1

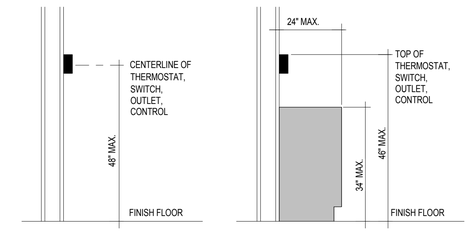

TEMPERATURE SENSOR DETAIL

SCALE: NONE | 3 | M2.1 | M6.1

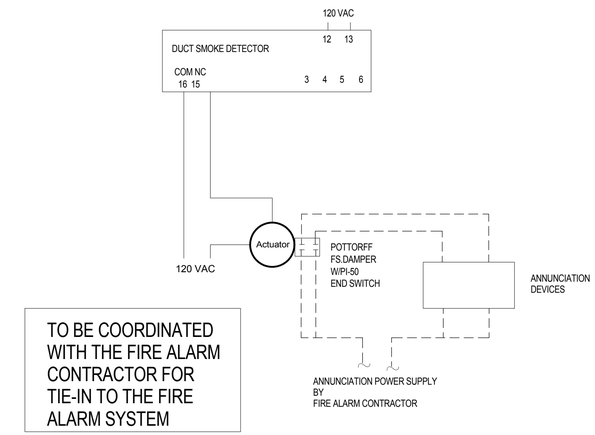

TO BE COORDINATED WITH THE FIRE ALARM CONTRACTOR FOR TIE-IN TO THE FIRE ALARM SYSTEM

CSFD WIRING DIAGRAM

SCALE: NONE | 4 | M6.1 | M6.1

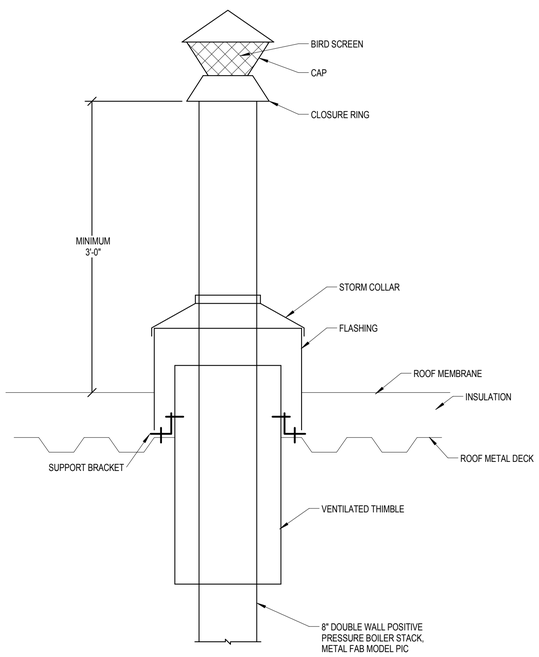

BOILER STACK ROOF PENETRATION

SCALE: NONE | 7 | M4.1 | M6.1

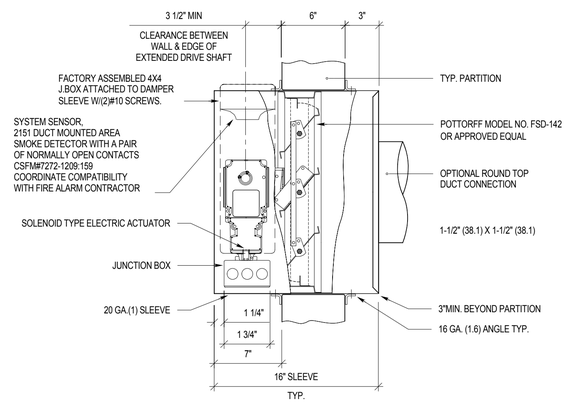

COMBINATION SMOKE/FIRE DAMPER THRU WALL DETAIL

SCALE: NONE | 5 | M2.2 | M6.1

FIRE/SMOKE DAMPER SPECIFICATIONS:

ALL FIRESMOKE DAMPERS SHALL BE LABELED AND LISTED BY CALIFORNIA STATE FIRE MARSHAL AND/OR UNDERWRITERS LABORATORIES. ALL DAMPERS MUST ALSO BE LEAKAGE RATED AND LABELED UNDER UNDERWRITER LABORATORIES STD. 555S. WITH SILICON SEALS ALLOWING NO MORE THAN 10 CFM/SQ.FT. AT 1" W.G. TO 350°F FOR A FULL 30 MIN. MOTOR OPERATED. TORQUE REQ'D. TO MAINTAIN LEAKAGE RATE NOT TO EXCEED 0 LBS. TORQUE. DAMPERS SHALL BE INSTALLED PER MANUFACTURERS INSTALLATION INSTRUCTIONS AND/OR STATE FIRE MARSHAL LISTING NO. 03225. POTTORFF COMPANY, INC. (LISTING # 03225:0368:110 AND 03230:0368:111) PROVIDE NON STALL SOLENOID MOTOR , 64 VA. MAXIMUM. TESTED FOR 1 YEAR CONTINUOUS POWER APPLICATIONS SUCH AS BELIMO CAPABLE TO REOPEN DAMPER REGARDLESS OF POWER FAILURE LENGTH OF TIME. PROVIDE 5 YEAR DAMPER AND ACTUATOR WARRANTY.

THIS PRODUCT IS LISTED BY CSFM FILE # 3225-0368:110

ACTUATORS SHALL BE 120V.

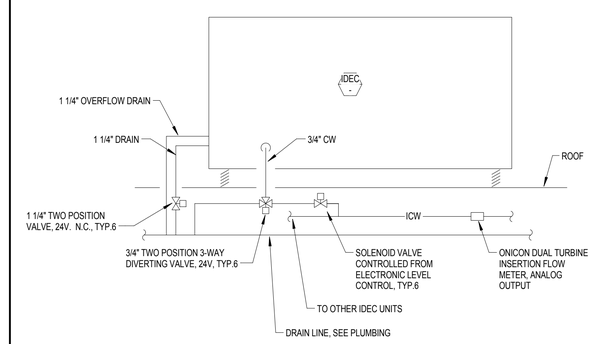

IDEC UNIT WATER & DRAIN DIAGRAM

SCALE: NONE | 6 | M4.1 M4.2 | M6.1

REGISTERED PROFESSIONAL ENGINEER — DONN C. GILMORE — No. 11541 — Exp. 9-30-11 — MECHANICAL — STATE OF CALIFORNIA

DONN C. GILMORE & ASSOCIATES, INC.
Consulting Mechanical and Electrical Engineers
DCGA
4051 E. La Palma Ave., Ste. A
Anaheim, CA 92807
Ph.: 714.630.4291
Fax: 714.630.4805

DATE	SYM	REVISION	BY	A'PD

NATIONAL AERONAUTICS AND SPACE ADMINISTRATION

DRYDEN FLIGHT RESEARCH CENTER
EDWARDS, CA

DRAWING TITLE

MECHANICAL DETAILS

PROJECT TITLE

FACILITIES SUPPORT CENTER BUILDING
100% FINAL DESIGN SUBMITTAL

APPROVALS		DATE
Chief, Facilities Engineering Division Safety Office DAN CROWLEY		4/14/11
Project Requestor /Customer DAN CROWLEY		4/14/11
Facilities Project Manager GEMMA FLORES		4/14/11
Chief, Office of Protective Services JOHN ZELLMER		4/14/11
Chief - Safety, Health, and Environmental Office DAN MULLEN		4/14/11
DFRC Chief Information Officer KEN NORLIN		4/14/11

DATE STRTD	11/08/10	DATE PRNTD	03/14/11
DRAWN BY		EDM-1703	
SCALE	AS NOTED	TRADE SH. No.	
FILE NAME		M6.1	SHEET No. 126 of 193

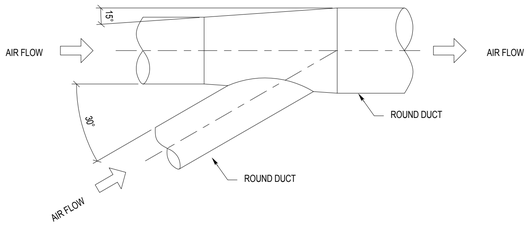

EXHAUST DUCT - DUST COLLECTOR

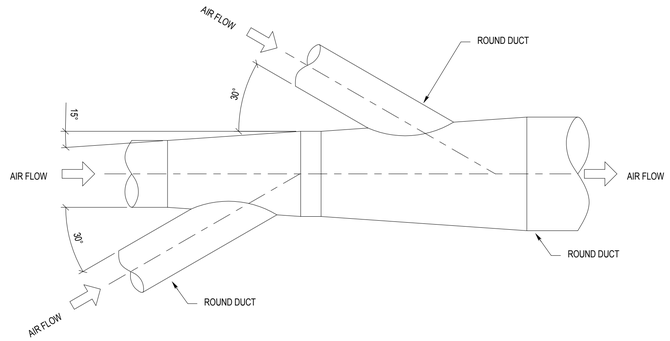

EXHAUST DUCT - DUST COLLECTOR

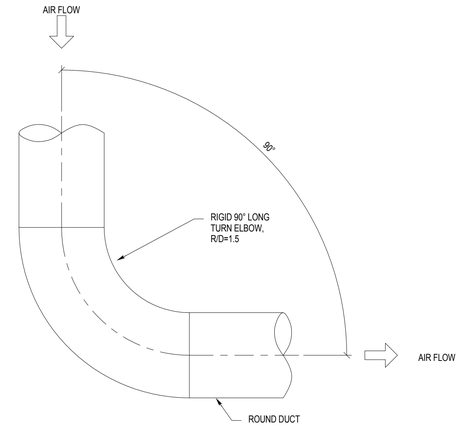

EXHAUST DUCT 90° TURN - DUST COLLECTOR

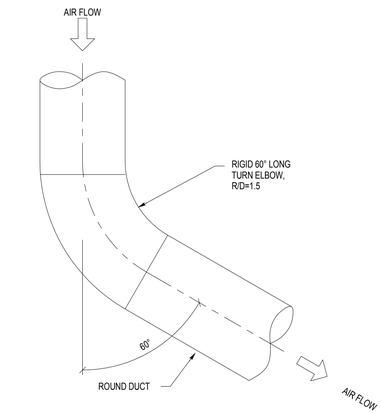

EXHAUST DUCT 60° TURN - DUST COLLECTOR

EXHAUST DUCT DUST COLLECTOR DETAIL

SCALE:	1
NONE	M2.2 / M6.2

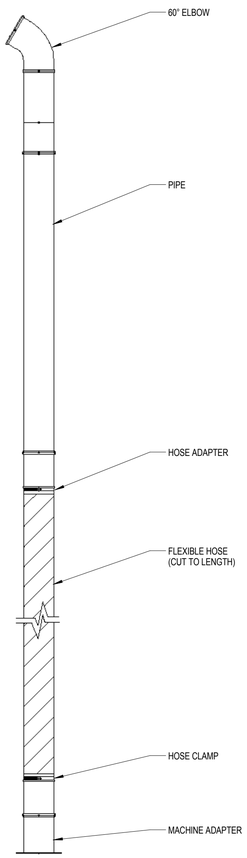

DUST COLLECTOR BRANCH DETAIL

SCALE:	2
NONE	M2.2 / M6.2

WOODWORKING SHOP DUST COLLECTING SYSTEM DUCTWORK

A. FURNISH AND INSTALL A DUST COLLECTION SYSTEM CONSISTING OF DUCTWORK, FITTINGS, EXHAUST HOODS AND CONNECTIONS TO EACH PIECE OF SHOP EQUIPMENT AND FLOOR SWEEPS, ALL AS HEREIN SPECIFIED OR SHOWN ON THE DRAWINGS AND REQUIRED FOR A COMPLETE OPERATING SYSTEM.

B. DUCTWORK SHALL BE CONSTRUCTED OF GALVANIZED SHEET STEEL AND MEET ALL SMACNA AND INDUSTRIAL VENTILATION MANUAL STANDARDS. CONVEYING VELOCITY IN BRANCH DUCTS SHALL BE 4,500 FEET PER MINUTE. DUCTWORK SHALL BE RATED FOR 20"WG NEGATIVE PRESSURE AND BE OF SPIRAL, LOCKING SEAM CONSTRUCTION. DUCT AND FITTING GAUGES SHALL BE AS FOLLOWS:

DIAMETER	DUCT GAUGE	FITTING GAUGE
UP TO 8"	24	20
9" TO 15"	22	18
16" TO 18"	20	16
19" TO 26"	18	14

C. ELBOWS SHALL HAVE A MINIMUM CENTERLINE RADIUS OF 1-1/2 TIMES THE DUCT DIAMETER.

D. PROVIDE DEAD-END CAPS WITHIN 6" OF LAST BRANCH OF ALL MAIN OR SUB-MAINS. PROVIDE CLEANOUTS EVERY 20 FEET NEAR EACH ELBOW IN HORIZONTAL SECTIONS.

E. TRANSITIONS IN MAINS AND SUB-MAINS SHALL BE TAPERED. TAPER 5" LONG FOR EACH 1" CHANGE IN DIAMETER.

F. SLIDE GATES SHALL BE FULL STYLE, WITH LOCKING SCREW AND PROVIDED FOR BALANCING THE SYSTEM. LOCATE GATE NEAR CONNECTION TO EACH MACHINE AND FLOOR SWEEP. DO NOT MAKE A CONNECTION TO ANY SPARK-PRODUCING MACHINE, SUCH AS A GRINDING WHEEL.

G. LOCATE 6" FLOOR SWEEP(S), WHERE SHOWN ON THE PLANS. IF PROVIDED WITH HINGED DOOR, FOR SAFETY REASONS, ATTACH CHAIN FROM DOOR TO VERTICAL DUCT AT 5' AFF.

H. FLEXIBLE HOSE CONNECTIONS FROM BRANCH DUCTS TO HOODS SHALL BE KEPT AT A MINIMUM AND BE MATERIAL HANDLING TYPE (NOT PVC), WITH WIRE REINFORCEMENT.

DUST COLLECTING DUCT GAUGE

SCALE:	3
NONE	M6.2 / M6.2

DUST COLLECTOR SPECIFICATION

FURNISH AS COMPLETE INTERMITTENT DUTY, SHAKER FABRIC FILTER DUST COLLECTION AS SHOWN ON THE PLANS AND/OR LISTED ON THE EQUIPMENT SCHEDULE. THE SYSTEM SHALL PROVIDE CLEANING FOR A VOLUMETRIC FLOW RATE OF _____ ACFM @ _____ °F @ _____ FEET ELEVATION. THE COLLECTOR SYSTEM SHALL HAVE A MINIMUM OF 450 SQUARE FEET OF 8 OZ WOVEN POLYESTER FILTER MEDIA.

THE COLLECTOR WILL INCLUDE A FAN SECTION, FILTER SECTION AND HOPPER(S) WITH LEGS AND QUICK RELEASE SEAL MECHANISM FOR CONNECTION TO INTEGRAL DUST BIN.

THE COLLECTOR HOUSING, HOPPER(S) AND SUPPORTS SHALL BE CONSTRUCTED OF CARBON STEEL AND THE HOUSING REINFORCED FOR MAXIMUM PRESSURE OF THE INTEGRAL FAN.

THE INTERIOR AND EXTERIOR OF THE COLLECTOR HOUSING WILL HAVE A BAKED ON POWDER PAINT FINISH. ALL INTERNAL COMPONENTS SHALL HAVE A BAKED ON ELECTROPHORETICALLY APPLIED EPOXY PAINT FINISH.

THE COLLECTOR WILL HAVE DUST BIN(S) SEALED TO THE HOPPER BOTTOM(S) BY A HAND OPERATED QUICK RELEASE SEAL MECHANISM OR WILL HAVE MECHANISM DESIGNED TO ACCEPT 55-GALLON DRUM (NO FASTENERS OR CLAMPS ARE REQUIRED). THE HOPPER(S) SHALL HAVE A DEFLECTOR PLATE AT THE DIRTY AIR INLET TO DIRECT LARGE PARTICLES DIRECTLY INTO THE DUST BIN AND DISTRIBUTE THE AIR. THE HOPPER SHALL BE SUPPLIED WITH COVERED OPENINGS SO AIR INLETS MAY BE LOCATED ON EITHER SIDE OR THE REAR. DUST LADEN AIR WILL FLOW UPWARD INTO THE FILTER SECTION WHICH SHALL CONTAIN A SINGLE, MULTI-ENVELOPE FILTER WITH SPRING STEEL WIRE MESH INSERTS FITTED WITH WEAR LINERS. THE SLIDE OUT FILTER ASSEMBLY SHALL BE SUPPORTED ON RUNNERS RETAINED BY A QUICK RELEASE LEVER. THE FILTERED AIR SHALL FLOW INTO THE FAN SECTION. THE FAN SHALL BE A WHEEL DESIGN DIRECTLY DRIVEN BY A 3450 RPM TEFC MOTOR.

FILTER CLEANING OCCURS AFTER EACH FAN SHUT DOWN. FILTER SHAKING IS VIA AN ECCENTRIC MOUNTED TENV MOTOR LOCATED ON THE SIDE OF THE HOUSING.

A CONTROLLER SHALL BE FURNISHED, CONSISTING OF START/CLEAN PUSHBUTTONS, TIMER AND MOTOR CONTACTORS WITH OVERLOADS FOR THE FAN AND SHAKER MOTORS, ALL IN A NEMA 12 ENCLOSURE. THE CONTROLLER SHALL AUTOMATICALLY ACTIVATE THE FILTER SHAKER MOTOR FOR 35 SECONDS EACH TIME THE FAN IS SHUT OFF.

THE COLLECTOR WILL BE SUPPLIED WITH LIFT-OFF HINGED DOORS FOR ACCESS TO THE FAN AND FILTER CHAMBER. NO TOOLS SHALL BE REQUIRED FOR FILTER REMOVAL AND REPLACEMENT.

THE FAN SHALL DISCHARGE INTO A SPECIAL FAN CHAMBER DESIGNED FOR NOISE REDUCTION. THE NOISE LEVEL SHALL NOT EXCEED _____ DB(A) AT 1 METER RADIUS FROM THE COLLECTOR HOUSING.

DUST COLLECTION SPECIFICATION

SCALE:	4
NONE	M6.2 / M6.2

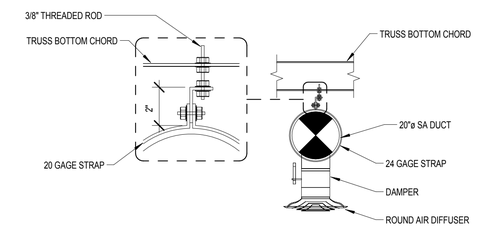

ELEVATION VIEW

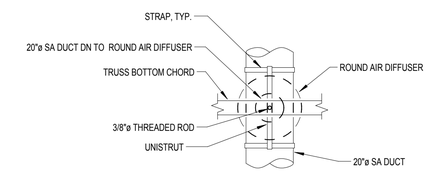

PLAN VIEW

DUCT MOUNTING DETAIL

SCALE:	5
NONE	M2.1 / M6.2

REGISTERED PROFESSIONAL ENGINEER
DONN C. GILMORE
No. 11541
Exp. 9-30-11
MECHANICAL
STATE OF CALIFORNIA

DONN C. GILMORE & ASSOCIATES, INC.
Consulting Mechanical and Electrical Engineers
DCGA
4051 E. La Palma Ave., Ste. A
Anaheim, CA 92807
Ph.: 714.630.4291
Fax: 714.630.4805

DATE	SYM	REVISION	BY	A'PD

NATIONAL AERONAUTICS AND SPACE ADMINISTRATION

DRYDEN FLIGHT RESEARCH CENTER
EDWARDS, CA

DRAWING TITLE

MECHANICAL DETAILS

PROJECT TITLE

FACILITIES SUPPORT CENTER BUILDING
100% FINAL DESIGN SUBMITTAL

APPROVALS	DATE
Chief, Facilities Engineering & Asset Mgmt. Office DAN CROWLEY	4/14/11
Project Requestor /Customer DAN CROWLEY	4/14/11
Facilities Project Manager GEMMA FLORES	4/14/11
Chief, Office of Protective Services JOHN ZELLMER	4/14/11
Chief - Safety, Health, and Environmental Office DAN MULLEN	4/14/11
DFRC Chief Information Officer KEN NORLIN	4/19/11

DATE STRTD	11/08/10	DATE PRNTD	03/14/11
DRAWN BY			EDM-1703
SCALE	AS NOTED	TRADE SH. No.	
FILE NAME		M6.2	SHEET No. 127 of 193

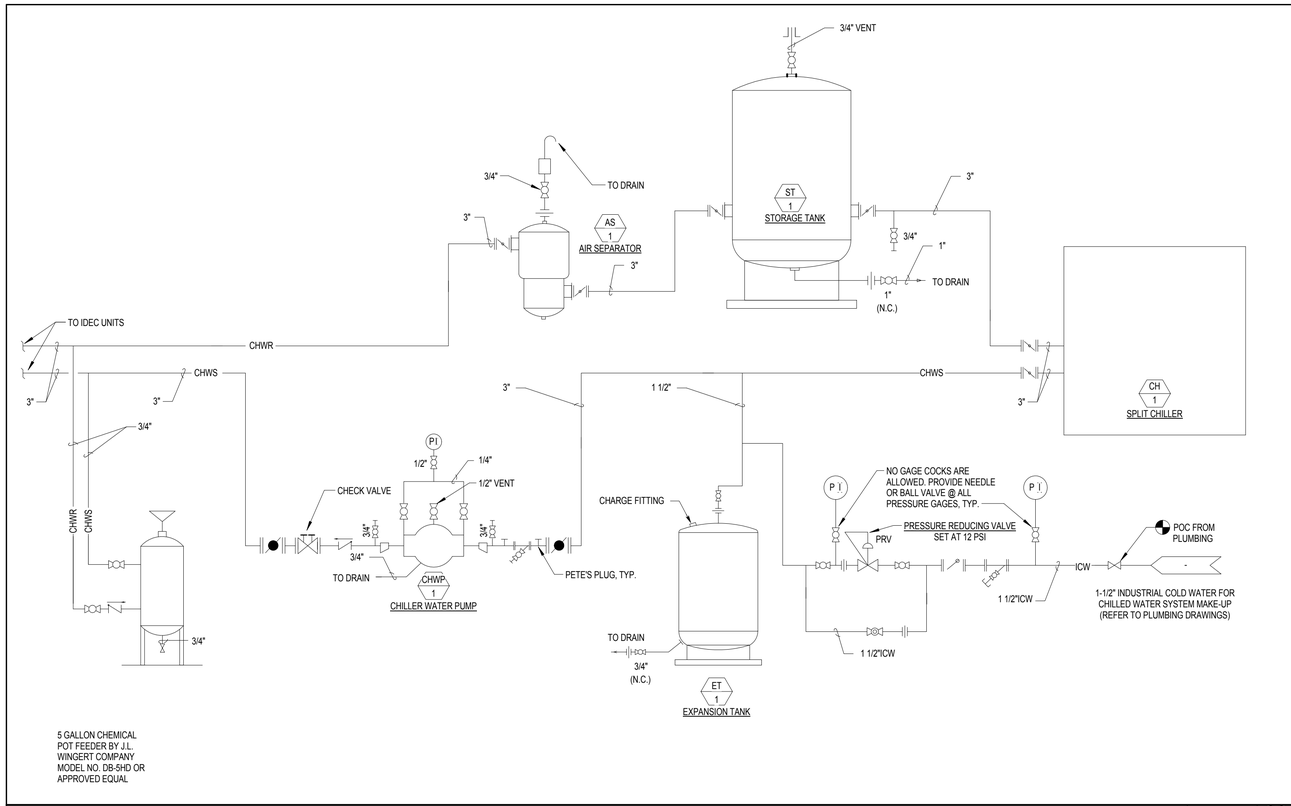

CHILLED WATER PIPING DIAGRAM

SCALE: NONE | 1 M6.3 M6.3

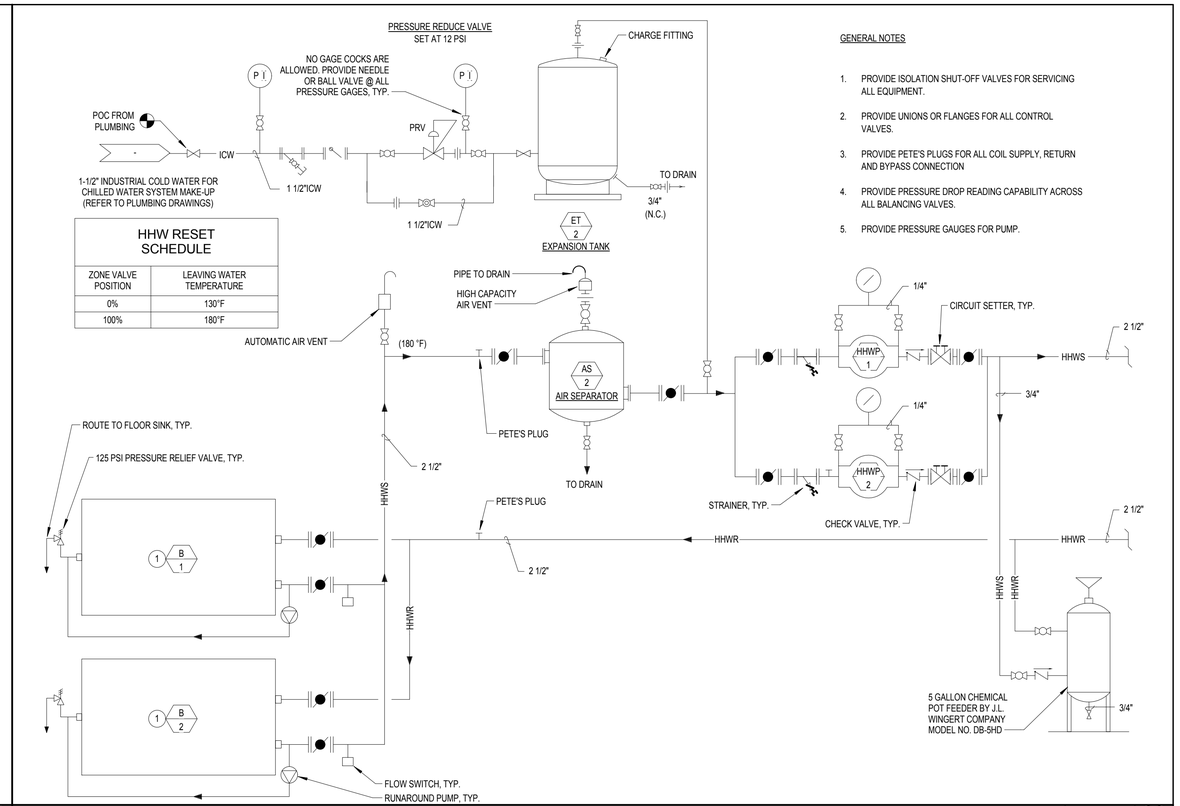

GENERAL NOTES

1. PROVIDE ISOLATION SHUT-OFF VALVES FOR SERVICING ALL EQUIPMENT.
2. PROVIDE UNIONS OR FLANGES FOR ALL CONTROL VALVES.
3. PROVIDE PETE'S PLUGS FOR ALL COIL SUPPLY, RETURN AND BYPASS CONNECTION
4. PROVIDE PRESSURE DROP READING CAPABILITY ACROSS ALL BALANCING VALVES.
5. PROVIDE PRESSURE GAUGES FOR PUMP.

HHW RESET SCHEDULE

ZONE VALVE POSITION	LEAVING WATER TEMPERATURE
0%	130°F
100%	180°F

HEATING HOT WATER PIPING DIAGRAM

SCALE: NONE | 2 M6.3 M6.3

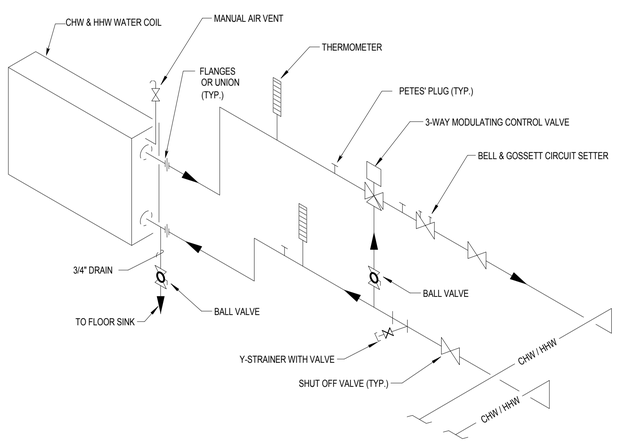

CHW & HHW COIL PIPING DIAGRAM

SCALE: NONE | 3 M6.3 M6.3

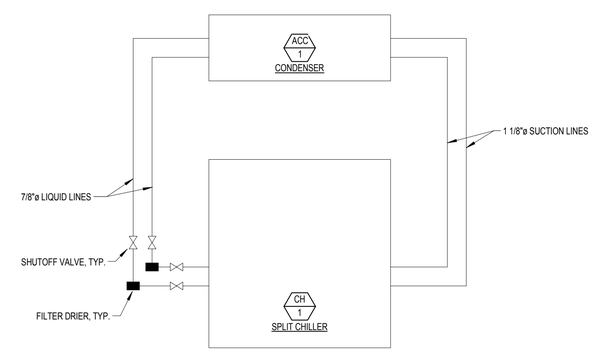

ACC-1 & CH-1 REFRIGERANT PIPING DIAGRAM

SCALE: NONE | 4 M6.3 M6.3

REGISTERED PROFESSIONAL ENGINEER DONN C. GILMORE No. 11541 Exp. 9-30-11 MECHANICAL STATE OF CALIFORNIA

DONN C. GILMORE & ASSOCIATES, INC.
Consulting Mechanical and Electrical Engineers
DCGA
4051 E. La Palma Ave., Ste. A
Anaheim, CA 92807
Ph.: 714.630.4291
Fax: 714.630.4805

DATE	SYM	REVISION	BY	A'PD

NATIONAL AERONAUTICS AND SPACE ADMINISTRATION
DRYDEN FLIGHT RESEARCH CENTER
EDWARDS, CA

DRAWING TITLE
MECHANICAL DETAILS

PROJECT TITLE
FACILITIES SUPPORT CENTER BUILDING
100% FINAL DESIGN SUBMITTAL

APPROVALS	DATE
Chief, Facilities Engineering & Asset Mgmt. Office DAN CROWLEY	4/14/11
Project Requestor /Customer DAN CROWLEY	4/14/11
Facilities Project Manager GEMMA FLORES	4/14/11
Chief, Office of Protective Services JOHN ZELLMER	4/14/11
Chief - Safety, Health, and Environmental Office DAN MULLEN	4/14/11
DFRC Chief Information Officer KEN NORLIN	4/14/11

DATE STRTD	11/08/10	DATE PRNTD	03/14/11
DRAWN BY		EDM-1703	
SCALE	AS NOTED	TRADE SH. No.	M6.3
FILE NAME		SHEET No. 128 of 193	

WEIGHTS:	STEEL BASE 110 lbs.	EQUIPMENT 1600 lbs.	FOR SPRING MOUNT DATA SEE: WF-26229-SLF
		CONCRETE 1185 lbs.	
2.0" SPECIFIED DEFLECTION		TOTAL 2895 lbs.	FOR SNUBBER DATA SEE: WF-26229-Z1225

Typical Base Layout- For Actual Locations See Plan View Below.

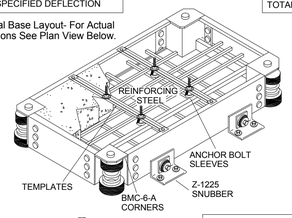

ANCHOR BOLT SLEEVE DETAIL

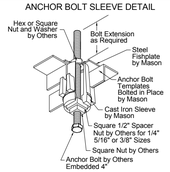

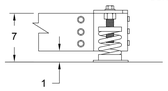

Z1225-500 Anchorage Requirements:
(2) 1/2" Dia. Hilti Kwik Bolt TZ Anchors
3 5/8" Embedment; 6" Edge Distance
3000 psi Stone Aggregate Concrete

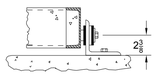

Supplied By MASON IND.

Yes	No	
■	□	BASE
■	□	TEMPLATE
■	□	ANCHOR BOLT SLEEVES AND FISHPLATE
□	■	LOOSE REINFORCING STEEL
■	□	WELDED REINFORCING STEEL

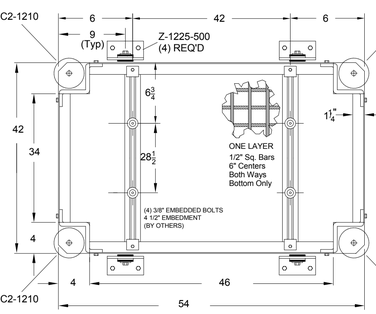

ANCHOR BOLT INSTALLATION INSTRUCTIONS

1. BMK Bases ordered with Anchor Bolt Templates are furnished with Templates already bolted in place.
2. The Mounting Carton contains the necessary number of cast iron sleeves and fishplates shown in position on the base drawing.
3. Fabricate embedded anchor bolts and bolt in position in locations shown on the drawings before pouring concrete.

MINIMUM HK PAD SIZE:62x62 (LxW)

CH-1 EQUIPMENT ANCHORAGE DETAIL

SCALE: NONE | 1 | M2.3 | M6.4

EQUIPMENT ANCHORAGE DETAILS

UNIT: TRANE CAUJC40
WEIGHT OF EQUIPMENT: 2395 LBS

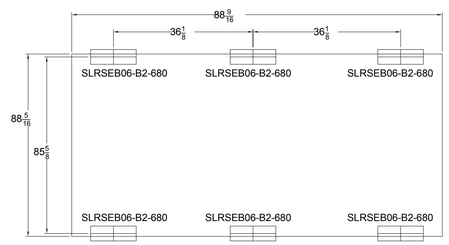

TOP VIEW

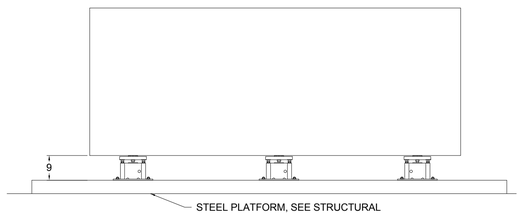

ELEVATION

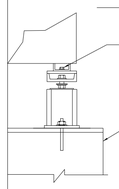

(NOTE: SS BOLTS ARE REQ'D FOR OUTDOOR/EXPOSED LOCATIONS)

ACC-1 EQUIPMENT ANCHORAGE DETAIL

SCALE: NONE | 2 | M4.0 | M6.4

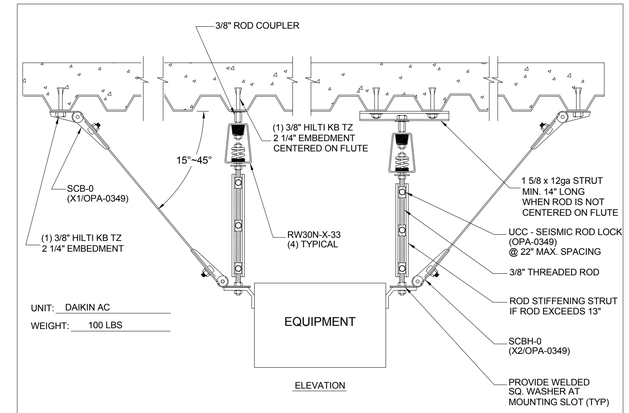

ELEVATION

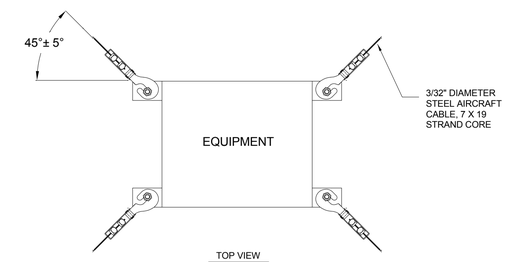

TOP VIEW

FAN COIL SUPPORT DETAIL

SCALE: NONE | 3 | M2.1 | M6.4

REGISTERED PROFESSIONAL ENGINEER DONN C. GILMORE No. 11541 Exp. 9-30-11 MECHANICAL STATE OF CALIFORNIA

DONN C. GILMORE & ASSOCIATES, INC.
Consulting Mechanical and Electrical Engineers
DCGA
4051 E. La Palma Ave., Ste. A
Anaheim, CA 92807
Ph.: 714.630.4291
Fax: 714.630.4805

DATE	SYM	REVISION	BY	A'PD

NATIONAL AERONAUTICS AND SPACE ADMINISTRATION
DRYDEN FLIGHT RESEARCH CENTER
EDWARDS, CA

DRAWING TITLE
MECHANICAL DETAILS

PROJECT TITLE
FACILITIES SUPPORT CENTER BUILDING
100% FINAL DESIGN SUBMITTAL

APPROVALS	DATE
Chief, Facilities Engineering Branch, Office DAN CROWLEY	4/14/11
Project Requestor /Customer DAN CROWLEY	4/14/11
Facilities Project Manager GEMMA FLORES	4/14/11
Chief, Office of Protective Services JOHN ZELLMER	4/14/11
Chief - Safety, Health, and Environmental Office DAN MULLEN	4/14/11
DFRC Chief Information Officer KEN NORLIN	4/14/11

DATE STRTD	11/08/10	DATE PRNTD	03/14/11
DRAWN BY			EDM-1703
SCALE	AS NOTED	TRADE SH. No.	
FILE NAME		M6.4	SHEET No. 129 of 193

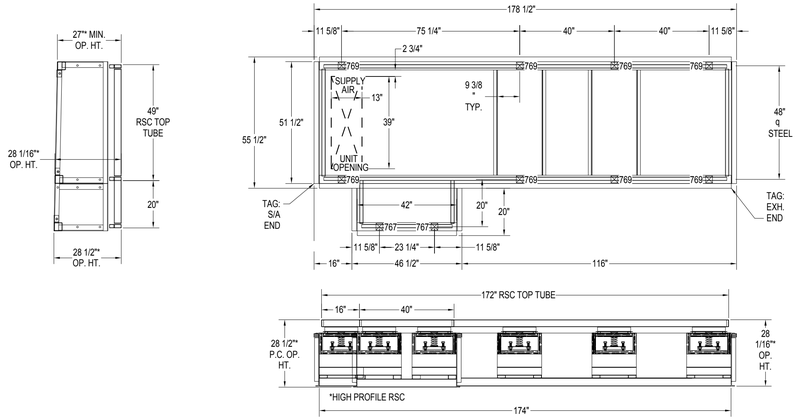

NOTE: SUPPLY DUCTING TO BE SUPPORTED OFF BOTTOM OF UNIT.

WEIGHT OF CURB = 880 LBS

IDEC-1, IDEC-2, AND IDEC-3 MOUNTING DETAIL

SCALE: 3/8" = 1'-0" | 1 | M4.1 | M6.5

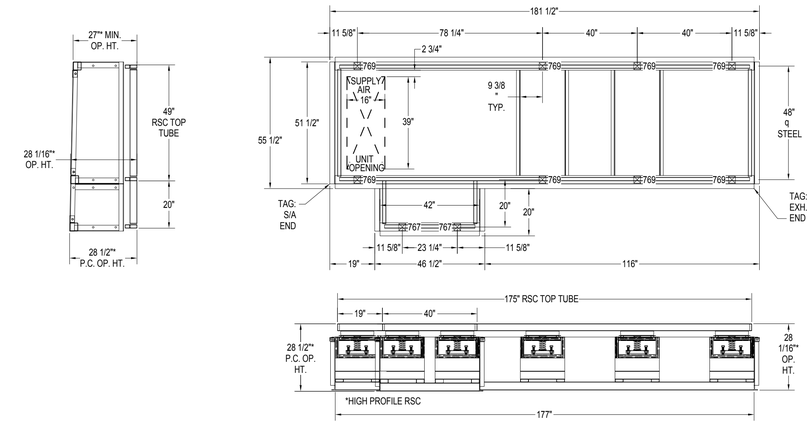

NOTE: SUPPLY DUCTING TO BE SUPPORTED OFF BOTTOM OF UNIT.

WEIGHT OF CURB = 880 LBS

IDEC-4 MOUNTING DETAIL

SCALE: 3/8" = 1'-0" | 2 | M4.1 | M6.5

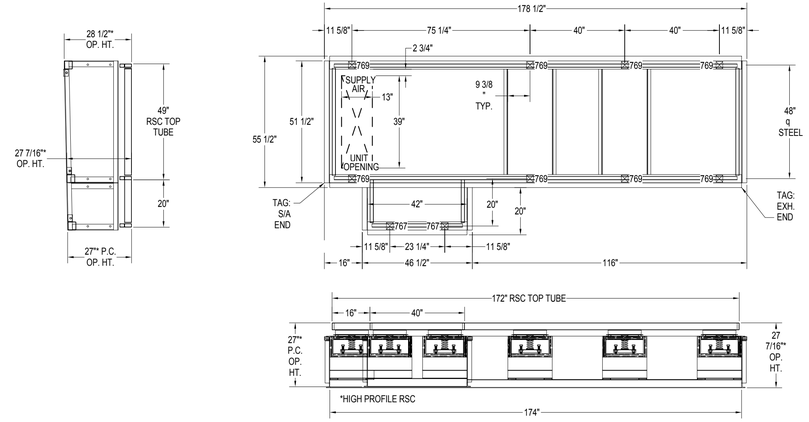

NOTE: SUPPLY DUCTING TO BE SUPPORTED OFF BOTTOM OF UNIT.

WEIGHT OF CURB = 1,200 LBS

IDEC-5 MOUNTING DETAIL

SCALE: 3/8" = 1'-0" | 3 | M4.1 | M6.5

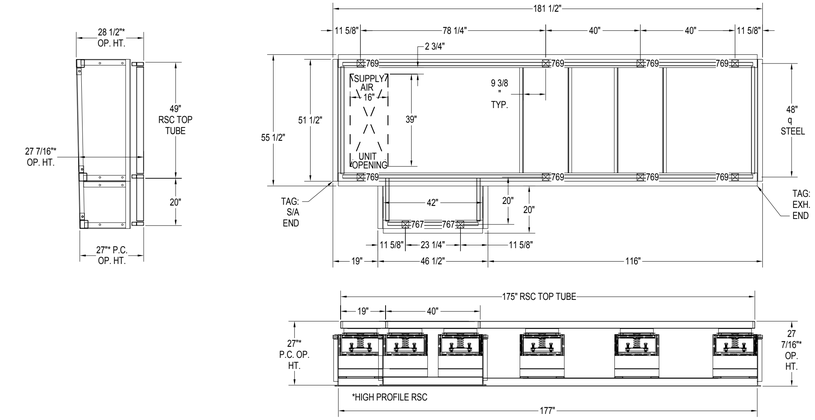

NOTE: SUPPLY DUCTING TO BE SUPPORTED OFF BOTTOM OF UNIT.

WEIGHT OF CURB = 1,200 LBS

IDEC-6 MOUNTING DETAIL

SCALE: 3/8" = 1'-0" | 4 | M4.1 | M6.5

REGISTERED PROFESSIONAL ENGINEER DONN C. GILMORE No. 11541 Exp. 9-30-11 MECHANICAL STATE OF CALIFORNIA

DONN C. GILMORE & ASSOCIATES, INC.
Consulting Mechanical and Electrical Engineers
DCGA
4051 E. La Palma Ave., Ste. A
Anaheim, CA 92807
Ph.: 714.630.4291
Fax: 714.630.4805

DATE	SYM	REVISION	BY	A'PD

NATIONAL AERONAUTICS AND SPACE ADMINISTRATION

DRYDEN FLIGHT RESEARCH CENTER
EDWARDS, CA

DRAWING TITLE

MECHANICAL DETAILS

PROJECT TITLE

FACILITIES SUPPORT CENTER BUILDING
100% FINAL DESIGN SUBMITTAL

APPROVALS	DATE
Chief, Facilities Engineering & Asset Mgmt. Office **DAN CROWLEY**	4/14/11
Project Requestor /Customer **DAN CROWLEY**	4/14/11
Facilities Project Manager **GEMMA FLORES**	4/14/11
Chief, Office of Protective Services **JOHN ZELLMER**	4/14/11
Chief - Safety, Health, and Environmental Office **DAN MULLEN**	4/14/11
DFRC Chief Information Officer **KEN NORLIN**	4/19/11

DATE STRTD	11/08/10	DATE PRNTD	03/14/11
DRAWN BY		EDM-1703	
SCALE	AS NOTED	TRADE SH. No.	M6.5
FILE NAME		SHEET No. 130 of 193	

UCC - SEISMIC ROD CLAMPS FOR STRUT CHANNELS

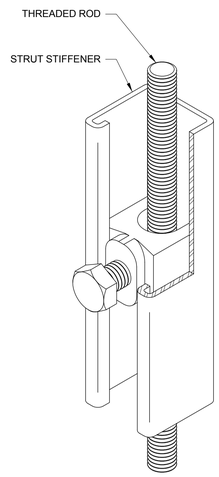

TYPE UCC WITH STEEL STRUT ASSEMBLY RATINGS

Rod Size in (mm)	Maximum Compressive Force lbs (kN)	Strut Stiffener: Minimum Size in (mm)	Strut Stiffener: Max Length in (mm)	Maximum UCC Spacing in (mm)
3/8 (10)	425 (1.9)	1 5/8 x 1 5/8 x 12 Gage (41 x 41 x 2.5)	96 (2438)	22 (559)
1/2 (13)	1275 (5.6) 1200 (5.3)	1 5/8 x 1 5/8 x 12 Gage (41 x 41 x 2.5) 1 5/8 x 1 5/8 x 12 Gage (41 x 41 x 2.5)	(2438) 120 96 (3048)	31 (787) 31 (787)
5/8 (16)	1475 (6.5) 1325 (5.9)	1 5/8 x 1 5/8 x 12 Gage (41 x 41 x 2.5) 1 5/8 x 1 5/8 x 12 Gage (41 x 41 x 2.5)	(2438) 120 (3048)	39 (991) 39 (991)
3/4 (19)	2500 (11.1)	1 5/8 x 1 5/8 x 12 Gage (41 x 41 x 2.5)	144 (3658)	48 (1212)

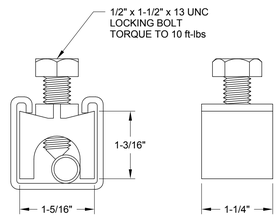

APPROVED
Fixed Equipment Anchorage
Office of Statewide Health Planning and Development
OPA-0349
on
January 16, 2009
Anthony R. Pike (916) 440-8470

Page **X5C**

Dhiru Mali
Structural Engineer
California SE No. 2811

SEISMIC ROD CLAMP DETAIL

SCALE: NONE | 3 | M6.6 | M6.6

SCB - SEISMIC CABLE BRACE

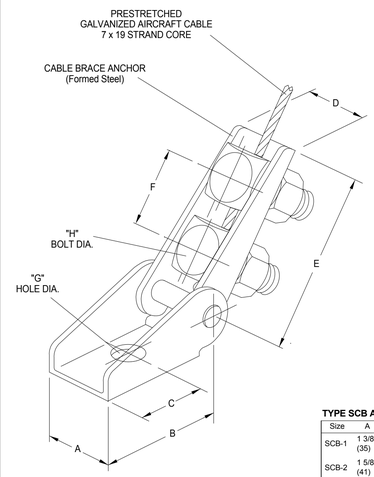

TYPE SCB ASSEMBLY RATINGS AS CONTROLLED BY CABLE BREAKING STRENGTH

Size	Cable Dia. in (mm)	OSHPD Max. Ratings lbs (kN)	Minimum Torque on Bolts ft-lbs (N-m)
SCB-1	1/8 (3)	975 (4.3)	25 (34)
SCB-2	3/16 (5)	2050 (9.1)	45 (61)
SCB-3	1/4 (6)	3150 (14.0)	55 (75)
SCB-4	3/8 (10)	6875 (30.5)	200 (271)

TYPE SCB ANCHOR DIMENSIONS - inches (mm)

Size	A	B	C	D	E	F	G	H
SCB-1	1 3/8 (35)	2 (51)	1 (25)	15/16 (24)	3 3/8 (86)	1 1/2 (38)	9/16 (14)	1/2 (13)
SCB-2	1 5/8 (41)	2 3/4 (70)	1 3/8 (35)	1 3/16 (30)	4 3/8 (111)	1 3/4 (45)	11/16 (17)	5/8 (16)
SCB-3	2 (51)	3 1/2 (89)	1 3/4 (45)	1 7/16 (37)	4 3/4 (121)	2 (51)	13/16 (21)	3/4 (19)
SCB-4	3 1/8 (79)	5 (127)	2 1/2 (64)	1 15/16 (49)	5 3/4 (146)	2 1/4 (57)	1 5/16 (33)	1 (25)

APPROVED
California Office of Statewide Health Planning and Development
FIXED EQUIPMENT ANCHORAGE
OPA-0349 August 5, 2002
*Valid for 3 Years Maximum
Bill Staehlin (916) 654-3362

Dhiru Mali
Structural Engineer
California SE No. 2811

Page **X1**

SEISMIC CABLE BRACE DETAIL

SCALE: NONE | 2 | M6.6 | M6.6

SCBH - SEISMIC CABLE BRACE WITH HOOK ATTACHMENT

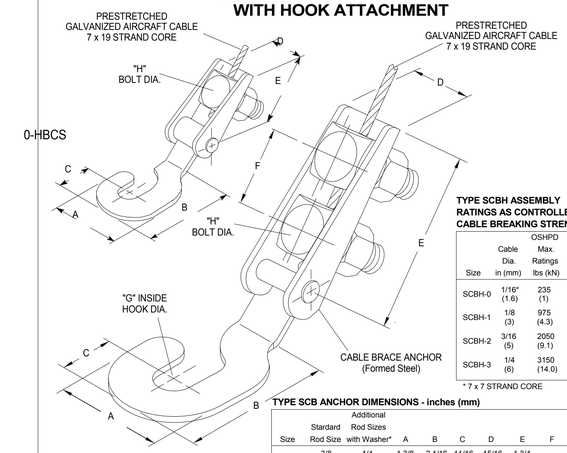

TYPE SCBH ASSEMBLY RATINGS AS CONTROLLED BY CABLE BREAKING STRENGTH

Size	Cable Dia. in (mm)	OSHPD Max. Ratings lbs (kN)	Minimum Torque on Bolts ft-lbs (N-m)
SCBH-0	1/16* (1.6)	235 (1)	30 (41)
SCBH-1	1/8 (3)	975 (4.3)	25 (34)
SCBH-2	3/16 (5)	2050 (9.1)	45 (61)
SCBH-3	1/4 (6)	3150 (14.0)	55 (75)

* 7 x 7 STRAND CORE

TYPE SCB ANCHOR DIMENSIONS - inches (mm)

Size	Standard Rod Size	Additional Rod Sizes with Washer*	A	B	C	D	E	F	G	H
SCBH-0	3/8 (10)	1/4 (6)	1 3/8 (35)	2 1/16 (52)	11/16 (18)	15/16 (24)	1 3/4 (45)	- (-)	3/8 (10)	1/2 (13)
SCBH-1	5/8 (16)	3/8 to 1/2 (10 to 13)	1 7/8 (48)	2 3/8 (60)	1 (25)	1 (25)	3 3/8 (86)	1 1/2 (38)	5/8 (16)	1/2 (13)
SCBH-2	7/8 (22)	1/2 to 3/4 (13 to 19)	2 7/8 (73)	3 3/4 (95)	1 3/8 (35)	1 3/16 (30)	4 3/8 (111)	1 3/4 (45)	7/8 (22)	5/8 (16)
SCBH-3	1 1/8 (29)	5/8 to 1 (16 to 25)	3 1/2 (89)	4 3/4 (121)	1 3/4 (44)	1 7/16 (37)	4 3/4 (121)	2 (51)	1 1/8 (29)	3/4 (19)

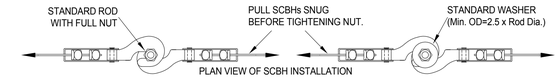

APPROVED
California Office of Statewide Health Planning and Development
FIXED EQUIPMENT ANCHORAGE
OPA-0349 August 5, 2002
*Valid for 3 Years Maximum
Bill Staehlin (916) 654-3362

Page **X2**

Dhiru Mali
Structural Engineer
California SE No. 2811

SEISMIC CABLE BRACE WITH HOOK DETAIL

SCALE: NONE | 1 | M6.6 | M6.6

REGISTERED PROFESSIONAL ENGINEER
DONN C. GILMORE
No. 11541
Exp. 9-30-11
MECHANICAL
STATE OF CALIFORNIA

DONN C. GILMORE & ASSOCIATES, INC.
Consulting Mechanical and Electrical Engineers
DCGA
4051 E. La Palma Ave., Ste. A
Anaheim, CA 92807
Ph.: 714.630.4291
Fax: 714.630.4805

DATE	SYM	REVISION	BY	A'PD

NATIONAL AERONAUTICS AND SPACE ADMINISTRATION
DRYDEN FLIGHT RESEARCH CENTER
EDWARDS, CA

DRAWING TITLE
MECHANICAL DETAILS

PROJECT TITLE
FACILITIES SUPPORT CENTER BUILDING
100% FINAL DESIGN SUBMITTAL

APPROVALS	DATE
Chief, Facilities Engineering & Asset Mgmt. Office DAN CROWLEY	4/14/11
Project Requestor (Customer) DAN CROWLEY	4/14/11
Facilities Project Manager GEMMA FLORES	4/14/11
Chief, Office of Protective Services JOHN ZELLMER	4/14/11
Chief - Safety, Health, and Environmental Office DAN MULLEN	4/14/11
DFRC Chief Information Officer KEN NORLIN	4/14/11

DATE STRTD	11/08/10	DATE PRNTD	03/14/11
DRAWN BY		EDM-1703	
SCALE	AS NOTED	TRADE SH. No.	
FILE NAME		M6.6	SHEET No. 131 of 193

TYPE

RW30N

1" Deflection
X, A, B, C, D & F
Spring Series Hangers
With Rebound Washers

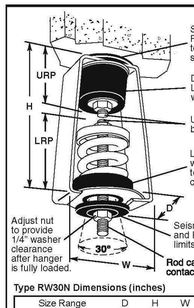

Type RW30N Dimensions (inches)

Size Range	D	H	W	LRP	URP	MRD
RW30N-X-23-210	2 1/2	5 1/2	2 7/8	3 1/4	1 3/4	3/8
RW30N-A-12-25	2 3/4	6 3/4	3 1/4	3 1/4	2 1/4	5/8
RW30N-A-41-95	2 3/4	6 3/4	3 1/4	3 5/8	2 1/4	5/8
RW30N-B-138-540	4	6 3/4	4 3/4	3 3/4	2 3/4	5/8
RW30N-C-630-1265	4 3/4	9	5 1/4	5	3	3/4
RW30N-D-1575-2150	4 3/4	12 1/2	5 3/4	7	4 1/4	7/8
RW30N-F-2760	6	14 1/2	6 1/4	7	5	7/8

LRP– Lower Rod Penetration
URL– Upper Rod Penetration
MRD– Maximum Rod Diameter

TYPE RW30N RATNGS

Size	Rated Capacity [lbs]	Rated Defl.* [in]	Spring Constant** [lbs/in]	Avg Defl. LDS Rubber [in]	Spring Color
RW30N-X-12	12	1.25	10	0.20	Orange
RW30N-X-23	23	1.50	18		Brown
RW30N-X-33	33	1.30	30		Red
RW30N-X-54	54	1.40	45		White
RW30N-X-76	76	1.22	73		Black
RW30N-X-113	113	1.20	113		Yellow
RW30N-X-130	130	1.20	130		Purple
RW30N-X-175	175	1.20	175		Silver
RW30N-X-210	210	1.20	210		Blue
RW30N-A-12	12	1.35	12	0.35	Red
RW30N-A-18	18	1.35	18		Gray
RW30N-A-25	25	1.35	25		Orange
RW30N-A-41	41	1.53	35		Pink
RW30N-A-56	56	1.49	49		Black
RW30N-A-73	73	1.41	69		Tan
RW30N-A-95	95	1.36	94		Green
RW30N-B-138	138	1.67	105	0.35	White
RW30N-B-222	222	1.51	191		Blue
RW30N-B-278	278	1.44	255		Purple
RW30N-B-336	336	1.35	336		Silver
RW30N-B-410	410	1.42	385		Black
RW30N-B-540	540	1.35	540		Yellow
RW30N-C-630	630	1.53	558	0.40	Gray
RW30N-C-800	800	1.40	800		Orange
RW30N-C-1010	1010	1.50	920		Green
RW30N-C-1265	1265	1.40	1265		Red
RW30N-D-1575	1575	1.63	1280	0.40	Pink
RW30N-D-2150	2150	1.43	2095		Purple
RW30N-F-2760	2760	1.40	2760	0.40	Silver

*includes double deflection LDS Rubber element.
**applies to spring only.
All springs have additional travel to solid equal to 50% of Rated Deflection.
Hanger elements have straight line deflection curves.

CERTIFICATION DATA

_____ **inch SPECIFIED DEFLECTION**

TAG : _____
UNIT : _____
PLAN VIEW OF HANGER LOCATION:

1 :	6 :
2 :	7 :
3 :	8 :
4 :	9 :
5 :	10 :
Material for One Set :	Sets Required

DWN : | CHKD: | DATE :

DWG NO. :

FORM S-664 10/06

PIPE SPRING HANGER

SCALE: NONE | 1 | M6.4 | M6.7

TYPE

SLF

2" Deflection
B, B2, C2 & 2-C2
Series Mountings

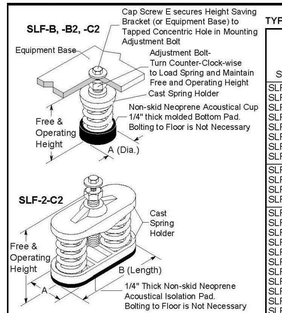

TYPE SLF DIMENSIONS (inches)

Size	Free & Oper. Height	A	B	Locking Cap Screw
SLF-B & B2	6 3/4	2 3/4	-	1/2 × 1 1/4
SLF-C2	6 3/4	3 1/4	-	1/2 × 1 1/4
SLF-2-C2	6 3/4	3 1/4	7 3/4	1/2 × 1 1/4

SPRING DATA

Spring OD	Free HT	Ratio K_1/K_2	Ratio OD/OH
2 3/8	4 - 4 1/2	0.55 - 0.90	0.79 - 1.18
2 7/8	5	0.63 - 0.85	0.96 - 1.15

TYPE SLF RATINGS

Size	Standard Ratings: Rated Capacity [lbs]	Rated Defl. [in]	Mount Constant [lbs/in]	Spring Color/Stripe	Ratings at 50% additional travel to solid: Capacity [lbs]	Defl. [in]
SLF-B-20	20	2.40	8	Tan	20	2.40
SLF-B-26	26	2.18	12	White/Blue	26	2.18
SLF-B-35	35	2.20	16	Purple	35	2.20
SLF-B-50	50	2.20	24	White/Red	50	2.20
SLF-B-65	65	2.10	31	Brown	65	2.10
SLF-B-85	85	2.10	40	White/Black	85	2.10
SLF-B-115	115	2.00	57	Silver	115	2.00
SLF-B-150	150	2.00	75	Orange	150	2.00
SLF-B2-210	210	2.12	99	Silver	210	2.12
SLF-B2-290	290	2.00	144	Blue	290	2.00
SLF-B2-450	450	2.00	224	Tan	410	1.83
SLF-B2-680	680	2.00	340	Gray	565	1.66
SLF-C2-125	125	2.50	50	Purple	125	2.50
SLF-C2-170	170	2.40	70	Brown	170	2.40
SLF-C2-210	210	2.30	90	Red	210	2.30
SLF-C2-260	260	2.20	120	White	260	2.20
SLF-C2-330	330	2.00	165	Black	330	2.00
SLF-C2-460	460	2.00	230	Blue	460	2.00
SLF-C2-610	610	2.00	305	Green	610	2.00
SLF-C2-880	880	2.00	440	Gray	800	1.82
SLF-C2-1210	1210	2.00	605	Silver	1010	1.67
SLF-C2-1540	1540	2.00	770	Gray*	1285	1.67
SLF-C2-1870	1870	2.00	935	Silver*	1560	1.67
SLF-2-C2-340	340	2.40	140	Brown	340	2.40
SLF-2-C2-420	420	2.30	180	Red	420	2.30
SLF-2-C2-520	520	2.20	240	White	520	2.20
SLF-2-C2-660	660	2.00	330	Black	660	2.00
SLF-2-C2-920	920	2.00	460	Blue	920	2.00
SLF-2-C2-1220	1220	2.00	610	Green	1220	2.00
SLF-2-C2-1760	1760	2.00	880	Gray	1600	1.82
SLF-2-C2-2420	2420	2.00	1210	Silver	2020	1.67
SLF-2-C2-3080	3080	2.00	1540	Gray *	2570	1.67
SLF-2-C2-3740	3740	2.00	1870	Silver *	3120	1.67

* with RED core spring

Multiple spring mounts have C size springs. Type SLF-2 has 2 springs. SLF-B2-450, B2-660, C2-880 thru C2-1870 and 2-C2-1760 thru 2-C2-3740 mounts have minimum 25% of rated deflection additional travel to solid. The last two columns show ratings at 50% additional travel.

CERTIFICATION DATA

_____ **inch SPECIFIED DEFLECTION**

DWN : | CHKD: | DATE :

DWG NO. :

FORM S-262-1b 01/98

SPRING ISOLATOR

SCALE: NONE | 2 | M4.1 | M6.7

TYPE

Z-1225

All Directional
Seismic Snubber
Sizes 250-2000

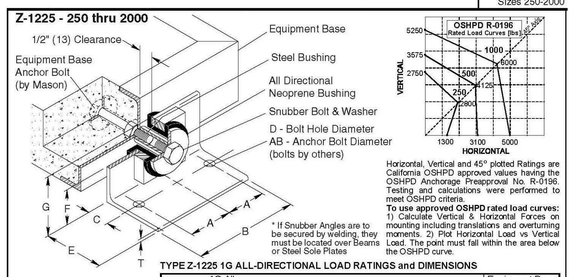

Horizontal, Vertical and 45° plotted Ratings are California OSHPD approved values having the OSHPD Anchorage Preapproval No. R-0196. Testing and calculations were performed to meet OSHPD criteria.
To use approved OSHPD rated load curves: 1) Calculate Vertical & Horizontal Forces on mounting including translations and overturning moments. 2) Plot Horizontal Load vs Vertical Load. The point must fall within the area below the OSHPD curve.

* If Snubber Angles are to be secured by welding, they must be located over Beams or Steel Sole Plates

TYPE Z-1225 1G ALL-DIRECTIONAL LOAD RATINGS and DIMENSIONS

	Size	1G All Directional Load Ratings	A	AB	B	C	D	E	F	G	T	Equipment Base Anchor Bolt Size & Length
U.S.A. or British (lbs. & Inches)	250	250 lbs	2	1/2	5	1 1/2	5/8	3	2 1/8	3 1/2	1/4	1/2"-13UNC-4"
	500	500 lbs	2 3/4	1/2	7	2	5/8	4	2 3/8	4	1/4	5/8"-11UNC-6"
	1000	1000 lbs	3	5/8	8	2 1/2	3/4	5	2 1/2	5	3/8	3/4"-10UNC-6"
	2000	2000 lbs	5	3/4	12	3	7/8	6	3	6	1/2	3/4"-10UNC-6"
Metric (kgs. & mm)	250	113 kgs	51	13	127	38	16	76	54	89	6	1/2"-13UNC-4"
	500	227 kgs	70	13	178	51	16	102	60	102	6	5/8"-11UNC-6"
	1000	454 kgs	76	16	203	64	19	127	64	127	10	3/4"-10UNC-6"
	2000	907 kgs	127	19	305	76	22	152	76	152	13	3/4"-10UNC-6"

NOTES:
1. Neoprene Bushings are 1/4" (6mm) thick throughout.
2. Operating clearances are 1/4" (6mm).
3. Set Base Anchors to protrude 3/4" (19mm) from face to face.
4. A continuous rod, threaded on each end and protruding 3/4" (19mm) from both the faces of the base may be used to secure the threaded steel bushings in lieu of the individual Base Anchor Bolts.
5. Normal clearance between base & floor is 1" (25mm).
6. Distance from Base Anchor Bolt centerline to bottom of base is F minus 1".
7. When 2" clearance between base and floor is specified, use 1" spacer plate under snubber angle.
8. Earthquake restraining angles are to be installed after equipment is in operation to assure design clearances are maintained as follows:
   a. Remove snubber bolt and washer.
   b. Screw steel bushing on Base Anchor Bolt protrusion.
   c. Pass Restraining Angle over steel bushing so it is centered horizontally.
   d. Raise or lower base with spring adjustments or shim Restraining Angle so steel bushing is centered vertically.
   e. Set Restraining Angle so inside vertical face is 1/2" (13mm) clear of base and parallel to it.
   *f. Mark and set AB anchor bolts or weld angle in position.
   g. Replace snubber bolt and washer and tighten in position.

CERTIFICATION DATA

DWN : | CHKD: | DATE :

DWG NO. :

FORM S-101-7ab 04/01

SEISMIC ANCHOR CLIP

SCALE: NONE | 3 | M2.3 | M6.7

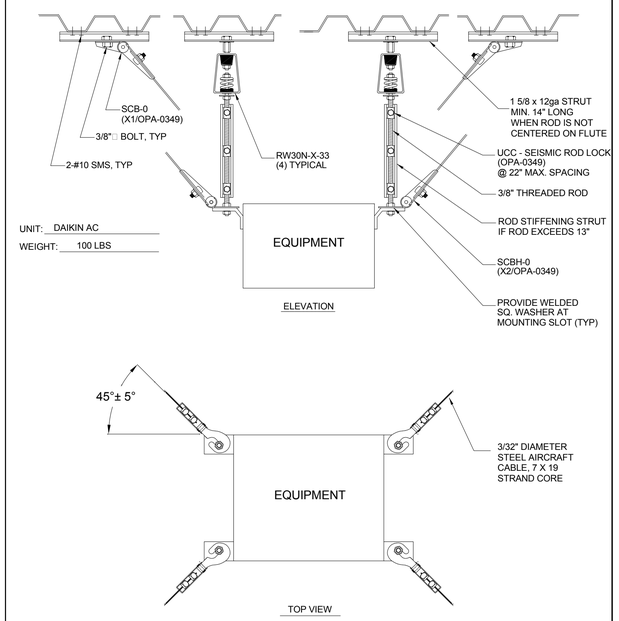

DWN SH | CHKD | DATE 1/18/11

DWG. NO. WF-26229-04A

FAN COIL MOUNTING DETAIL

SCALE: NONE | 4 | M2.1 | M2.2 | M6.7

REGISTERED PROFESSIONAL ENGINEER
DONN C. GILMORE
No. 11541
Exp. 9-30-11
MECHANICAL
STATE OF CALIFORNIA

DONN C. GILMORE & ASSOCIATES, INC.
Consulting Mechanical and Electrical Engineers
DCGA
4051 E. La Palma Ave., Ste. A
Anaheim, CA. 92807
Ph.: 714.630.4291
Fax: 714.630.4805

DATE	SYM	REVISION	BY	A'PD

NATIONAL AERONAUTICS AND SPACE ADMINISTRATION
DRYDEN FLIGHT RESEARCH CENTER
EDWARDS, CA

DRAWING TITLE
MECHANICAL DETAILS

PROJECT TITLE
FACILITIES SUPPORT CENTER BUILDING
100% FINAL DESIGN SUBMITTAL

APPROVALS	DATE
Chief, Facilities Engineering & Asset Mgmt. Office DAN CROWLEY	4/14/11
Project Requestor /Customer DAN CROWLEY	4/14/11
Facilities Project Manager GEMMA FLORES	4/14/11
Chief, Office of Protective Services JOHN ZELLMER	4/14/11
Chief - Safety, Health, and Environmental Office DAN MULLEN	4/14/11
DFRC Chief Information Officer KEN NORLIN	4/14/11

DATE STRTD	11/08/10	DATE PRNTD	03/14/11
DRAWN BY		EDM-1703	
SCALE	AS NOTED	TRADE SH. No.	M6.7
FILE NAME		SHEET No. 132 of 193	

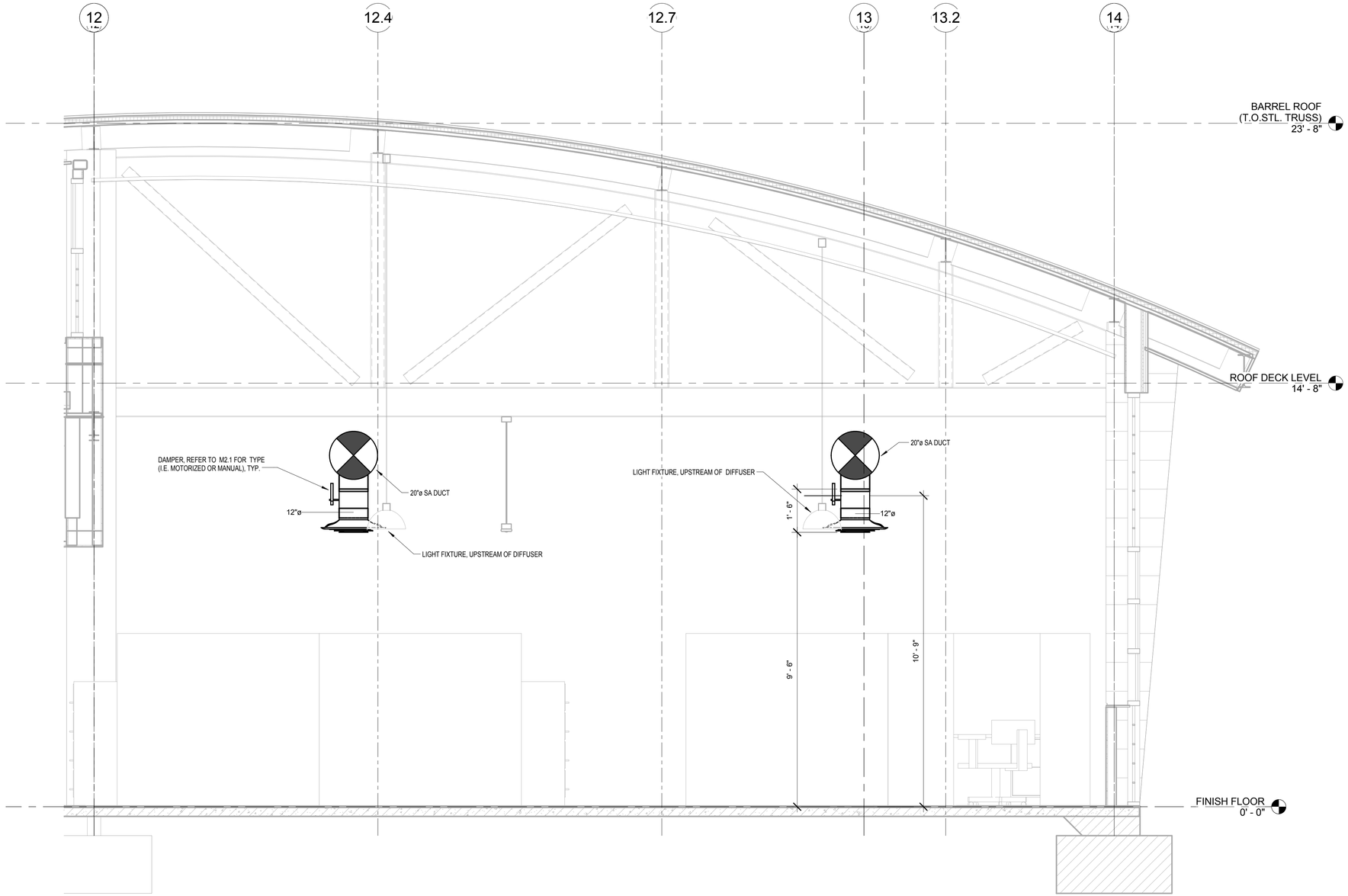

SECTION - AT 120 OFFICE SUITE

SCALE: 1/2" = 1'-0"

1 M2.1 M7.0

REGISTERED PROFESSIONAL ENGINEER
DONN C. GILMORE
No. 11541
Exp. 9-30-11
MECHANICAL
STATE OF CALIFORNIA

DONN C. GILMORE & ASSOCIATES, INC.
Consulting Mechanical and Electrical Engineers
DCGA
4051 E. La Palma Ave., Ste. A
Anaheim, CA 92807
Ph.: 714.630.4291
Fax: 714.630.4805

DATE	SYM	REVISION	BY	A'PD

NATIONAL AERONAUTICS AND SPACE ADMINISTRATION

DRYDEN FLIGHT RESEARCH CENTER
EDWARDS, CA

DRAWING TITLE

MECHANICAL SECTIONS

PROJECT TITLE

FACILITIES SUPPORT CENTER BUILDING
100% FINAL DESIGN SUBMITTAL

APPROVALS		DATE
Chief, Facilities Engineering Division, Project Mgmt Office DAN CROWLEY		4/14/11
Project Requestor /Customer DAN CROWLEY		4/14/11
Facilities Project Manager GEMMA FLORES		4/14/11
Chief, Office of Protective Services JOHN ZELLMER		4/14/11
Chief - Safety, Health, and Environmental Office DAN MULLEN		4/14/11
DFRC Chief Information Officer KEN NORLIN		4/14/11

DATE STRTD	11/08/10	DATE PRNTD	03/14/11
DRAWN BY			EDM-1703
SCALE	AS NOTED	TRADE SH. No.	
FILE NAME		M7.0	SHEET No. 133 of 193

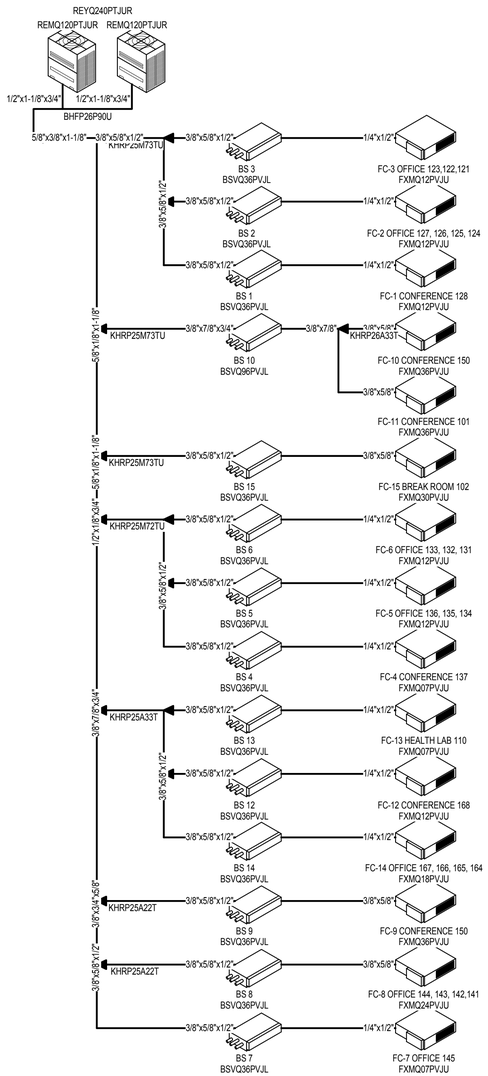

FAN COIL PIPING DIAGRAM

SCALE: NONE

1 M8.0

P1P2 = 18-2 AWG 2 CORE NON SCREENED STRANDED WIRE (NON POLARITY WIRING SYSTEM).
P1F2 = 18-2 AWG 2 CORE NON SCREENED STRANDED WIRE (NON POLARITY WIRING SYSTEM).

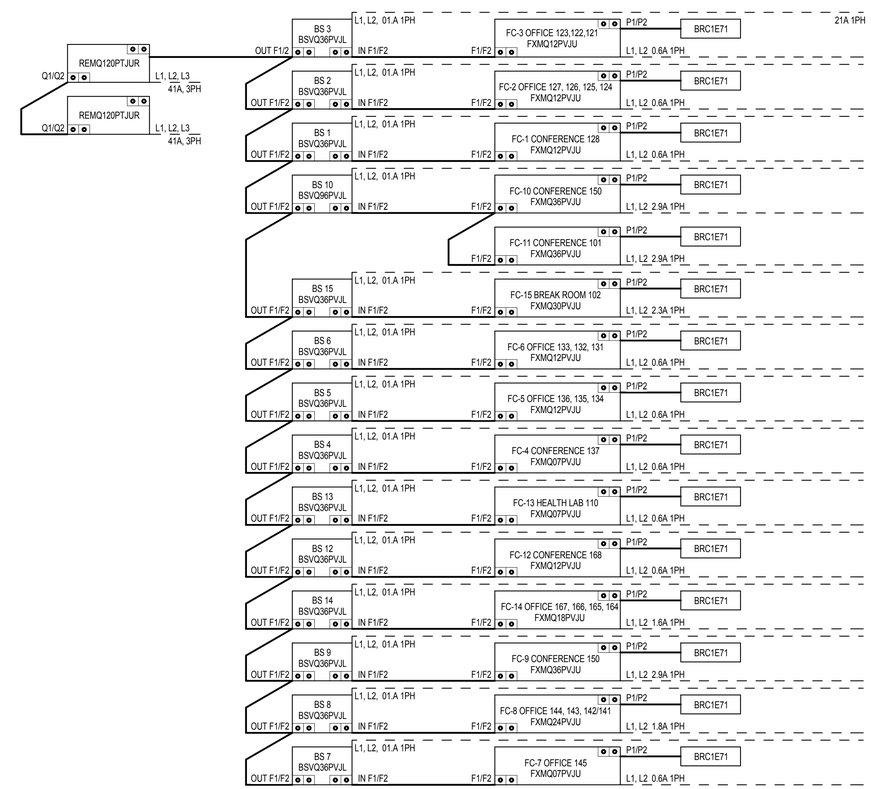

FAN COIL WIRING DIAGRAMS

SCALE: NONE

2 M8.0

DONN C. GILMORE & ASSOCIATES, INC.
Consulting Mechanical and Electrical Engineers
DCGA
4051 E. La Palma Ave., Ste. A
Anaheim, CA 92807
Ph.: 714.630.4291
Fax: 714.630.4805

REGISTERED PROFESSIONAL ENGINEER
DONN C. GILMORE
No. 11541
Exp. 9-30-11
MECHANICAL
STATE OF CALIFORNIA

DATE	SYM	REVISION	BY	A'PD

NATIONAL AERONAUTICS AND SPACE ADMINISTRATION

DRYDEN FLIGHT RESEARCH CENTER
EDWARDS, CA

DRAWING TITLE

MECHANICAL VARIABLE REFRIGERANT FLOW CONTROLS

PROJECT TITLE

FACILITIES SUPPORT CENTER BUILDING
100% FINAL DESIGN SUBMITTAL

APPROVALS		DATE
Chief, Facilities Engineering & Asset Mgmt. Office DAN CROWLEY		4/14/11
Project Requestor /Customer DAN CROWLEY		4/14/11
Facilities Project Manager GEMMA FLORES		4/14/11
Chief, Office of Protective Services JOHN ZELLMER		4/14/11
Chief - Safety, Health, and Environmental Office DAN MULLEN		4/14/11
DFRC Chief Information Officer KEN NORLIN		4/14/11

DATE STRTD	11/08/10	DATE PRNTD	03/14/11
DRAWN BY		EDM-1703	
SCALE	AS NOTED	TRADE SH. No.	
FILE NAME		M8.0	SHEET No. 134 of 193

INDIRECT-DIRECT EVAPORATIVE COOLING SEQUENCE OF OPERATION

IDEC SYSTEM SEQUENCE OF OPERATION
THE INDIRECT/DIRECT EVAPORATIVE COOLING (IDEC) SYSTEM CONSISTS OF AN INDIRECT EVAPORATIVE COOLING SECTION, FILTER BANKS, DIRECT EVAPORATIVE COOLING SECTION, A DIRECTLY DRIVEN PLENUM SUPPLY FAN WITH VARIABLE FREQUENCY DRIVE (VFD) A HOT WATER HEATING COIL AND A CHILLED WATER COOLING COIL. THE IDEC SYSTEMS OPERATE WITH 100% OUTDOOR AIR INTAKE AND AIR IS RELIEVED FROM THE BUILDING BY VARIABLE SPEED EXHAUST FANS RESPONDING TO BUILDING PRESSURE RISE.

SYSTEM OPERATION
EACH IDEC SYSTEM OPERATES AS SCHEDULED BY THE BMS UNLESS COMMANDED MANUALLY BY THE BUILDING ENGINEER OR SHUTDOWN AUTOMATICALLY UNDER ALARM CONDITIONS. RELIEF FANS ARE ENABLED WHEN THE IDEC SYSTEMS ARE ENABLED AND ARE CONTROLLED TO MAINTAIN SPACE PRESSURE.

WHEN EACH IDEC SYSTEM IS ACTIVATED, THE OUTSIDE AIR DAMPER OPENS. WHEN DAMPER IS OPEN (DAMPER POSITION STATUS SIGNAL PROOF), THE VFD IS ALLOWED TO START THE FAN. THE BMS PROGRAM SHALL STOP THE SUPPLY FAN WHEN A FAN SHUT-DOWN IS INITIATED BY A SIGNAL FROM THE HOA SWITCH, DOOR INTERLOCK SAFETY SWITCH, SUPPLY AIR SMOKE ALARM, FREEZE PROTECTION DEVICE OR BY EXCESS AN NEGATIVE PRESSURE CONTROL SWITCH HAVING MANUAL RESET BUTTON.

·MONITOR THE POWER DEMAND (KW) OF EACH IDEC SYSTEM AND TREND IT AT 5 MINUTE INTERVALS INITIALLY.

SPACE COOLING MODE
WHEN THE IDEC SYSTEM IS ENABLED IN COOLING MODE, THE SUPPLY FAN MODULATES BETWEEN 30% UP TO 100% SPEED TO MAINTAIN THE AVERAGE SPACE TEMPERATURE BETWEEN 72°F TO 76°F.
THE BAS WILL MONITOR OUTSIDE AIR DRY BULB AND DEW POINT TEMPERATURES IN ONE LOCATION (SENSORS MOUNTED ON POLE IN REPRESENTATIVE NORTH FACING AREA).
UPON A CALL FOR COOLING, AS MEASURED AT THE SPACE TEMPERATURE SENSORS TEMPERATURE RISE TO 74°F, THE INDIRECT COOLING SECTION SHALL BE ENABLED.
·THE INDIRECT EVAPORATIVE COOLING (IEC) SECTION MOTORIZED BALL VALVE WILL OPEN (ON/OFF CONTROL) AND CIRCULATION PUMP WILL START TO PROVIDE SENSIBLE COOLING TO THE AIR STRE EVAPORATION.
·ONCE IN OPERATION, THE DIRECT SECTION SHALL REMAIN OPERATIVE UNTIL THE SYSTEM SHUTS DOWN OR UNTIL THE AVERAGE SPACE TEMPERATURE DROPS BELOW 71°F.

WITH THE INDIRECT EVAPORATIVE COOLING(IEC) IN OPERATION, UPON A RISE IN THE AVERAGE SPACE TEMPERATURE TO 75°F, THE DDC SYSTEM WILL ENABLE EITHER THE CHW COIL (IF OA DEW PO/ ABOVE 62°F - ADJUSTABLE) OR ENABLE THE DIRECT EVAPORATIVE SECTION (IF OA DEW POINT IS BELOW 62°F – ADJUSTABLE).
·THE DIRECT EVAPORATIVE COOLING SECTION IS ACTIVATED BY OPENING THE MOTORIZED BALL VALVE TO ALLOW WATER TO CIRCULATE OVER THE MUNTERS "GLASDEK" EVAPORATIVE COOLING MEDIA.
·THE CHILLED WATER COIL CONTROL VALVE WILL MODULATE TO MAINTAIN THE SUPPLY AIR TEMPERATURE AT THE 62°F SETPOINT (ADJUSTABLE).
WHEN THE AVERAGE SPACE TEMPERATURE STARTS TO DROP, CAUSED BY EVAPORATIVE AND/OR CHILLED WATER COOLING, PROPORTIONALLY MODULATE THE SUPPLY FAN SPEED BETWEEN 100% 30% AS THE AVERAGE SPACE TEMPERATURE DROPS FROM 76°F DOWN TO 72°F.

SPACE HEATING MODE
IF THE SPACE TEMPERATURE DROPS INTO THE HEATING RANGE WHILE THE IEC MODULE IS ACTIVE AND THE SUPPLY AIR FLOW IS AT 30%, MODULATE THE HEATING HOT WATER VALVE TO MAINTAIN A SUPPLY AIR TEMPERATURE BETWEEN 60°F UP TO 90°F AS THE SPACE TEMPERATURE DROPS FROM 71°F DOWN TO 68°F.
·WHEN THE OUTSIDE AIR TEMPERATURE DROPS BELOW 60°F, THE IEC MODULE (1ST COOLING STAGE) SHALL BE DE-ENERGIZED.

WHEN THE SUPPLY FAN MINIMUM AIR FLOW OF 30% IS REACHED AND SPACE TEMPERATURE CONTINUES TO DROP INTO THE SPACE HEATING RANGE (71°F-68°F), THE HEATING HOT WATER COIL VALVE SHALL PROPORTIONALLY OPEN TO RESET THE SUPPLY AIR TEMPERATURE FROM 60°F TO 90°F TO MAINTAIN THE SPACE TEMPERATURE WITHIN THE HEATING RANGE.
MODULATE THE SUPPLY FAN SPEED FROM 30% UP TO 50% TO MAINTAIN THE AVERAGE SPACE TEMPERATURE BETWEEN 71°F AND 68°F IN HEATING MODE, AND ONLY WHEN THE HEATING COIL IS PROVIDING HEATED AIR.
·IF NOT PROVIDING HEAT AS SENSED BY THE LEAVING AIR TEMPERATURE SENSOR BEING WITHIN +3.0°F OF RESET TEMPERATURE FOR 5 MINUTES, THEN THE FAN SPEED WILL HOLD AT 30% AND AN OPERATOR ALARM FOR HEATING FAILURE-COLD SPACE WILL BE INITIATED.

RELIEF/EXHAUST FAN CONTROL/MONITORING:
RELIEF-E/XHAUST(R/E) FANS ASSOCIATED WITH THE IDEC UNITS SHALL BE ENABLED WHEN THE RESPECTIVE IDEC UNIT IS ENABLED. MONITOR THE SPACE PRESSURE AND CONTROL THE RELIEF/EXHAUST FAN SPEED TO HOLD THAT PRESSURE TO 0.05" POSITIVE WITH RESPECT TO THE OUTDOORS.
·TREND AND RECORD THE SPACE PRESSURE AND EXHAUST FAN SPEED AT 5 MINUTE INTERVALS WHEN THE FANS ARE RUNNING.
·PROVIDE AN AVERAGED SPACE PRESSURE INDICATION TO EACH R/E FAN VFD THROUGH THE BMS SO THAT THE SPACES WILL NOT HAVE CROSS CURRENTS BLOWING THROUGH THE ENTRANCES TO ADJACENT SPACES WHERE ANOTHER IDEC IS OPERATING.

FREEZE PROTECTION MODE
WHEN THE OUTSIDE AIR TEMPERATURE DROPS TO 33°F FOR 60 MINUTES (ADJ), INVOKE THE FREEZE PROTECTION MODE.
·STOP THE EVAPORATIVE COOLING PUMP AND OPEN THE CONTROL VALVE FOR THE DIRECT COOLING SURFACE TO ALLOW THE PIPING TO DRAIN DOWN INTO THE BASIN.
·CLOSE THE INCOMING (MAKEUP) WATER VALVE AND OPEN THE BASIN DRAIN VALVE TO DRAIN WATER FROM THE BASIN INTO THE RECYCLED WATER CISTERN BELOW PROVIDED BY PLUMBING.
·OPEN THE HEATING COIL CONTROL VALVE TO 50% AND START THE HEATING WATER SYSTEM IF THE SUPPLY FAN IS NOT RUNNING AND ALREADY PROVIDING HEATED AIR TO THE SPACES.
·ALARM THE OPERATOR WHEN THE TEMPERATURE INSIDE THE AIR HANDLER (COOLING SUPPLY AIR) DROPS BELOW 33°F SIGNIFYING A PENDING COIL FREEZE CONDITION.

WHEN THE OUTSIDE AIR TEMPERATURE RISES ABOVE 34°F FOR 60 MINUTES (ADJ), TURN OFF THE FREEZE PROTECTION MODE, ALLOWING AUTOMATIC BASIN FILL AND NORMAL SYSTEM OPERATION.

SYSTEM AUTOMATIC FILL AND ALARM CONTROL:
MODULATE THE BASIN FILL VALVE TO MAINTAIN THE BASIN WATER LEVEL AT SETPOINT.
·ALARM THE OPERATOR IF THE WATER LEVEL REACHES THE HIGH ALARM LEVEL, INDICATING TROUBLE WITH THE MAKEUP VALVE.
·ALARM THE OPERATOR WHEN THE LOW WATER LEVEL HAS BEEN REACHED AND SHUT OFF THE RECIRCULATION PUMP TO PREVENT PUMP SEAL DAMAGE FROM RUNNING DRY.

SYSTEM AUTOMATIC FLUSH CYCLE:
PERIODICALLY CLOSE THE MAKEUP WATER VALVES AND OPEN THE BASIN DRAIN VALVE TO FLUSH OUT ACCUMULATED SOLIDS AND MATTER.
·DISABLE THE RECIRCULATION PUMP WHILE THE SYSTEMS ARE DRAINED AND RE-ENABLE IT AFTER THE FLUSH CYCLE HAS COMPLETED AND THE BASINS ARE FULL OF WATER ONCE AGAIN.
·SCHEDULE THE FLUSH CYCLE AFTER NORMAL BUSINESS HOURS WHEN THE SYSTEMS ARE NORMALLY SHUT DOWN. PROGRAM THE SCHEDULE INITIALLY FOR ONCE A WEEK UNTIL THE WATER CHEMISTRY HAS BEEN FIGURED OUT AND SETTLED IN.
·LENGTHEN THE FLUSH CYCLES AS MUCH AS IS PRACTICAL TO KEEP THE RECIRCULATING WATER FRESH AND CLEAN, HAVING THE PROPER SOLIDS LEVEL.

IDEC SYSTEM CONTROL/MONITORING:
MONITOR THE OA TEMPERATURE, DEW POINT AND ENTHALPY. PROVIDE WEATHER STATION GRADE INSTRUMENTATION SYSTEM THAT ACCURATELY MEASURES THE OA TEMPERATURE, DEW POINT AND ENTHALPY.

MONITOR THE SUPPLY AIR DRY BULB AND DEW POINT TEMPERATURES AND ENTHALPY USING CHILLED MIRROR WITH PRT SENSOR FOR DEW POINT AND SEPARATE PRT SENSOR FOR DRY BULB.
·TRANSMIT THESE VARIABLES VIA 4-20 MA ANALOG SIGNALS OR BY DIGITAL INTERFACE.
·CALCULATE ENTHALPY FROM THE DEWPOINT AND DRY BULB TEMPERATURES.
·TREND THESE VARIABLES CONTINUOUSLY EVERY 5 MINUTES TO START WITH.

MONITOR THE TWO POSITION DAMPER ACTUATOR POSITIONS.

MONITOR THE IDEC BASIN WATER LEVELS WITH ANALOG FLOAT LEVEL SENSORS PRODUCING 4-20 MA OUTPUTS.
·FOR THE LOW AND HIGH LEVEL ALARMS, PROVIDE ELECTRIC CONDUCTIVITY PROBE OR FLOAT LEVEL SWITCH TYPE MONITORS INDEPENDENT FROM THE OPERATING LEVEL SENSOR.
·ENCLOSE THE LEVEL SENSORS IN A STILLING WELL FOR ACCURATE PERFORMANCE.

MOTORIZED DRAIN VALVES SHALL HAVE 5 SECOND MOTORS AND SHALL BE FULL BORE BALL VALVES FOR QUICK DRAINAGE WITH ZERO BLOCKAGE POTENTIAL.
·SIZE THE MAKEUP VALVE WITH A STANDARD (REDUCED) PORT AND BALL AND A MODULATING ACTUATOR.
·ACTUATORS SHALL PROVIDE ANALOG POSITION INDICATION FOR MONITORING BY THE DDC CONTROLLER.

HEATING WATER SYSTEM – FOR IDEC UNITS
THE HEATING WATER SYSTEM CONSISTS OF TWO NATURAL GAS BOILERS, TWO CIRCULATION PUMPS AND ACCESSORIES TO MAKE A CLOSED LOOP HEATING WATER SYSTEM FEEDING THE HEATING COILS IN THE IDEC UNITS. THE PUMPS ARE DEDICATED TO THE BOILERS AND WHEN THE PUMP IS STARTED, THE RESPECTIVE BOILER STARTS. THE SYSTEM IS DESIGNED FOR CONSTANT FLOW WITH MIXING VALVES AT EACH HEATING COIL.
·START THE LEAD PUMP/BOILER WHEN THE OUTSIDE AIR TEMPERATURE DROPS TO 60°F AND EITHER HEATING WATER CONTROL VALVE OPENS TO 50% SIGNALING A NEED FOR HEAT.
·START THE LAG PUMP/BOILER WHEN THE LEAD PUMP/BOILER OPERATION FAILS.
·SUPPLY WATER TEMPERATURE CONTROL IS BY INDIVIDUAL BOILER CONTROLLER, RESET BY THE BMS VIA A BACNET DATA LINK.
·RESET THE SUPPLY WATER TEMPERATURE FROM 150°-180°F AS THE OUTDOOR TEMPERATURE DROPS FROM 60° DOWN TO 30°F
·PROVIDE A LEAD/LAG PROGRAM THAT SWITCHES THE LEAD PUMP/BOILER ONCE A WEEK.
·MONITOR PUMP MOTOR AMPS AS A MEASURE OF STATUS
·MONITOR BOILER BURNER OPERATION AND BOILER ENABLED STATUS.
·ALARM THE OPERATOR WHEN A PUMP OR BOILER FAILS TO REPORT RUNNING STATUS OR IF A BOILER FAILS. SWITCH THE LEAD POSITION LEAVING THE FAILED BOILER IN THE LAG POSITION UNTIL THE ALARM IS ACKNOWLEDGED AND RESET.

CHILLED WATER SYSTEM – FOR IDEC UNITS
THE CHILLED WATER SYSTEM CONSISTS OF ONE AIR COOLED CHILLER WITH ONE CHILLED WATER CIRCULATING PUMP AND ACCESSORIES TO MAKE A CLOSED LOOP COOLING WATER SYSTEM FEEDING THE CHILED WATER COILS IN THE IDEC UNITS. THE SYSTEM IS DESIGNED FOR CONSTANT FLOW WITH MIXING VALVES AT EACH COOLING COIL.
·START THE CHILLED WATER PUMP WHEN EITHER IDEC UNIT CALLS FOR CHILLED WATER AS DETERMINED BY THE POSITION OF THE CONTROL VALVE. WHEN THE FIRST CONTROL VALVE OPENS TO 50%, ENABLE THE CHILLER SYSTEM.
·SUPPLY WATER TEMPERATURE IS CONTROLLED BY THE CHILLER CONTROLLER, RESET BY THE BMS VIA A BACNET DATA LINK.
·RESET THE CHILLED WATER SETPOINT REMOTELY FOR OPTIMAL PERFORMANCE OF THE SYSTEM. IT IS INTENDED THAT THE SETPOINT BE FIXED AND NOT RESET BY ANYTHING OTHER THAN THE OPERATOR.
·MONITOR CHILLED WATER PUMP MOTOR AMPS AS A MEASURE OF STATUS
·MONITOR CHILLER SYSTEM KILOWATTS AS ENABLED STATUS.
·ALARM THE OPERATOR WHEN THE PUMP OR CHILLER FAILS TO REPORT RUNNING STATUS OR IF CHILLER FAILS TO PROVIDE CHILLED WATER WITHIN 15 MINUTES OF BEING ENABLED, OR FAILS WHILE MAKING CHILLED WATER AND THE LEAVING WATER TEMPERATURE RISES PAST 60°F.
·TREND CHILLER ENABLED SIGNAL AND KW EVERY 5 MINUTES INITIALLY.

VRV SYSTEM – OFFICES AND CONFERENCE ROOMS
SEVERAL VARIABLE REFRIGERANT FLOW (VRV) HEAT PUMP SYSTEMS ARE PROVIDED TO COOL AND HEAT THE OFFICES AND CONFERENCE ROOMS IN THIS FACILITY. A VRV SYSTEM UTILIZES A COMMON REFRIGERANT HEATING/COOLING UNIT OUTDOORS CONNECTED TO MULTIPLE FAN COIL UNITS LOCATED IN THE SPACES SERVED BY REFRIGERANT LINES. THE INDOOR UNITS CONSIST OF CEILING MOUNTED FANS, DX COILS, FILTERS AND CONTROLS. THE SPACE TEMPERATURE AND THE VRV UNITS ARE CONTROLLED BY PROPRIETARY PACKAGED DIGITAL CONTROL SYSTEMS THAT ARE BACNET DEVICES THAT CAN RESIDE ON A BACNET BMS SYSTEM NETWORK.
A DEDICATED OUTDOOR AIR SYSTEM PROVIDES FRESH AIR TO INDOOR FAN COIL UNITS SERVING CONFERENCE ROOMS ONLY. THE AMOUNT OF FRESH AIR WILL BE FIXED.
OCCUPANCY SENSORS IN THE CONFERENCE ROOMS SHALL TURN OFF THE LIGHTS AND PLACE THESE SYSTEMS INTO A DAYTIME SETBACK MODE WHEN THE SPACE IS DETERMINED TO BE VACANT.
·SET INITIAL DAYTIME SETBACKS FOR 65°F AND 78°F
·SET FRESH AIR TO OFF WHEN SPACE IS UNOCCUPIED

DOAS – FRESH AIR PRECONDITIONING
A DEDICATED OUTDOOR AIR SYSTEM (DOAS) PROVIDES FILTERED AND PRE-CONDITIONED FRESH AIR TO THE CONFERENCE ROOMS EVAPORATOR UNITS.
·START THE DOAS SYSTEM WHEN ANY SPACE REQUIRING PRE-CONDITIONED FRESH AIR
·ALARM THE OPERATOR IF THE DOAS FAILS TO START AND PROVIDE FRESH AIR WHEN CALLED ON.

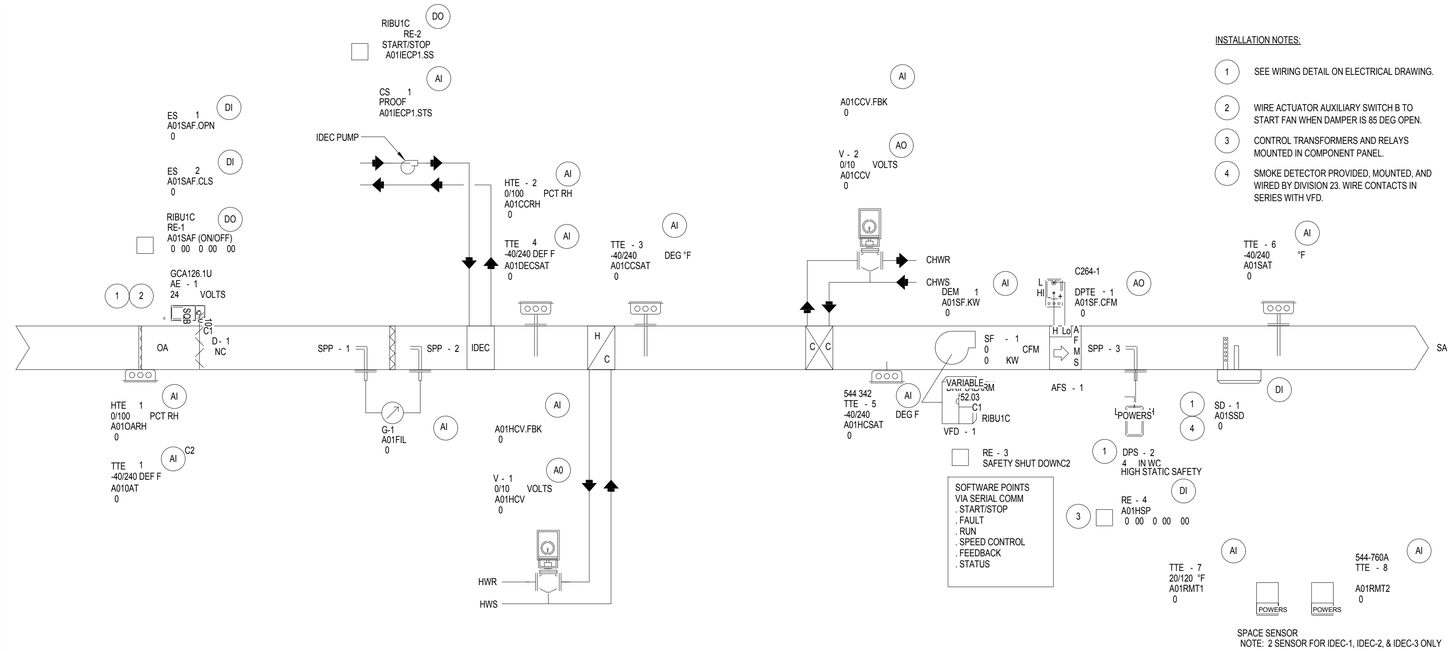

INSTALLATION NOTES:

1. SEE WIRING DETAIL ON ELECTRICAL DRAWING.
2. WIRE ACTUATOR AUXILIARY SWITCH B TO START FAN WHEN DAMPER IS 85 DEG OPEN.
3. CONTROL TRANSFORMERS AND RELAYS MOUNTED IN COMPONENT PANEL.
4. SMOKE DETECTOR PROVIDED, MOUNTED, AND WIRED BY DIVISION 23. WIRE CONTACTS IN SERIES WITH VFD.

IDEC SYSTEM CONTROL DIAGRAM

SCALE: NONE

M8.1 | M8.1

REGISTERED PROFESSIONAL ENGINEER DONN C. GILMORE No. 11541 Exp. 9-30-11 MECHANICAL STATE OF CALIFORNIA

DONN C. GILMORE & ASSOCIATES, INC.
Consulting Mechanical and Electrical Engineers
DCGA
4051 E. La Palma Ave., Ste. A
Anaheim, CA 92807
Ph.: 714.630.4291
Fax: 714.630.4805

DATE	SYM	REVISION	BY	A'PD

NATIONAL AERONAUTICS AND SPACE ADMINISTRATION
DRYDEN FLIGHT RESEARCH CENTER
EDWARDS, CA

DRAWING TITLE
MECHANICAL CONTROLS

PROJECT TITLE
FACILITIES SUPPORT CENTER BUILDING
100% FINAL DESIGN SUBMITTAL

APPROVALS	DATE
Chief, Facilities Engineering & Asset Mgmt Office DAN CROWLEY	4/14/11
Project Requestor /Customer DAN CROWLEY	4/14/11
Facilities Project Manager GEMMA FLORES	4/14/11
Chief, Office of Protective Services JOHN ZELLMER	4/14/11
Chief - Safety, Health, and Environmental Office DAN MULLEN	4/14/11
DFRC Chief Information Officer KEN NORLIN	4/14/11

DATE STRTD	11/08/10	DATE PRNTD	03/14/11
DRAWN BY			EDM-1703
SCALE	AS NOTED	TRADE SH. No.	
FILE NAME		M8.1	SHEET No. 135 of 193

BOILER SEQUENCE OF OPERATION

THE HOT WATER SYSTEM, WHICH IS 100% REDUNDANT, CONSISTS OF TWO HOT WATER BOILERS WITH RECIRCULATING PUMPS AND TWO HOT WATER DISTRIBUTION PUMPS. THE SYSTEM IS DDC CONTROLLED WITH ELECTRIC ACTUATION.

THE SYSTEM OPERATES AS FOLLOWS (ALL SUGGESTED SET POINTS AND SETTINGS ARE ADJUSTABLE.):

BOILER/PUMP ALTERNATION
BOILER/PUMP COMBINATIONS ALTERNATE TO EQUALIZE EQUIPMENT RUNTIME. SELECTION OF THE LEAD AND SECOND BOILER IS EVALUATED ON A WEEKLY BASIS. THE BOILER/PUMP COMBINATION WITH THE LEAST RUNTIME IS THE LEAD. THE BOILER/PUMP COMBINATION WITH THE MOST RUNTIME IS SECOND.

COMBUSTION AIR
THE COMBUSTION AIR DAMPER IS HARDWIRE INTERLOCKED TO OPEN WHENEVER A BOILER IS STARTED. THE END SWITCH ON THE COMBUSTION AIR DAMPER IS HARDWIRE INTERLOCKED TO PREVENT THE BOILER FROM FIRING UNTIL THE DAMPER IS OPENED.

HEATING CONTROL
AT THE BEGINNING OF THE HEATING SEASON, AS DEFINED BY THE HEATING SYSTEM ENABLE POINT BEING ENERGIZED (MANUALLY BY THE OPERATOR OR BY PROGRAM FUNCTION (I.E., TIME-OF-DAY)), THE BOILERS AND THEIR RECIRCULATING PUMPS ARE STARTED. TO AVOID THERMAL SHOCK AND CORROSION PROBLEMS, THE BOILERS RUN CONTINUOUSLY DURING THE HEATING SEASON MAINTAINING THE MINIMUM REQUIRED WATER TEMPERATURE. DURING INITIAL PLANT START UP, THERE IS A 30 MINUTE TIME DELAY BEFORE THE DISTRIBUTION PUMP IS STARTED TO ALLOW THE BOILER TO REACH MINIMUM TEMPERATURE. AT THE END OF THE HEATING SEASON (HEATING SYSTEM ENABLE POINT IS DEENERGIZED), THE BOILERS, RECIRCULATING PUMPS AND DISTRIBUTION PUMPS ARE TURNED OFF.

IF THE HEATING SYSTEM ENABLE POINT IS ON AND THE OUTDOOR AIR TEMPERATURE IS BELOW 65 DEGREES F (18 DEGREES C), THE LEAD HEATING DISTRIBUTION PUMP STARTS.

THE LEAD PUMP REMAINS ON UNTIL THE OUTDOOR AIR TEMPERATURE IS ABOVE 65 DEGREES F (18 DEGREES C) OR THE HEATING SYSTEM ENABLE POINT IS OFF.

IF A BOILER GOES INTO ALARM, THE BOILER/PUMP COMBINATION IS TURNED OFF AND THE NEXT BOILER/PUMP COMBINATION IN SEQUENCE TAKES OVER. IF A PUMP FAILS, AN ALARM IS GENERATED, THE PUMP IS TURNED OFF AND THE NEXT BOILER/PUMP COMBINATION IN SEQUENCE TAKES OVER.

THE BOILER CONTROL SYSTEM, PROVIDED BY THE BOILER MANUFACTURER, IS FACTORY WIRED EXCEPT FOR FIELD INSTALLED DEVICES (COMBUSTION AIR DAMPER INTERLOCKS, FLOW SWITCHES, LOW WATER CUT OFF, ETC.). FLAME SAFEGUARD CONTROLS ARE INCLUDED WITH THE BOILER.

THE DDC SYSTEM USES CURRENT TRANSMITTERS TO CONFIRM THE PUMPS ARE IN THE DESIRED STATE (I.E. ON OR OFF) AND GENERATES AN ALARM IF STATUS DEVIATES FROM DDC START/STOP CONTROL.

THE DDC SYSTEM MONITORS THE BOILER CONTROLS FOR A COMMON ALARM CONDITION (I.E. LOW WATER CUT OFF, FLAME FAILURE, ETC.).

THE DDC SYSTEM GENERATES AN ALARM WHEN THE WATER TEMPERATURE IS OUTSIDE THE MINIMUMS OR MAXIMUMS AS REQUIRED BY THE BOILER MANUFACTURER (I.E. DIFFERENTIAL TEMPERATURE TOO LARGE OR TOO SMALL, RETURN OR SUPPLY TEMPERATURE TOO LOW, ETC.).

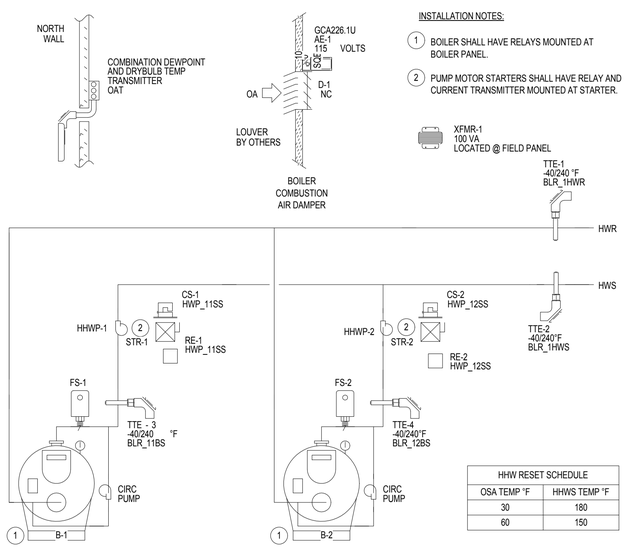

INSTALLATION NOTES:

1. BOILER SHALL HAVE RELAYS MOUNTED AT BOILER PANEL.
2. PUMP MOTOR STARTERS SHALL HAVE RELAY AND CURRENT TRANSMITTER MOUNTED AT STARTER.

XFMR-1
100 VA
LOCATED @ FIELD PANEL

HHW RESET SCHEDULE	
OSA TEMP °F	HHWS TEMP °F
30	180
60	150

BOILER SYSTEM CONTROL DIAGRAM

SCALE: NONE | 2 | M8.2 | M8.2

CHW SEQUENCE OF OPERATION

THE CHILLED WATER SYSTEM CONSISTS OF A SPLIT AIR-COOLED CHILLER CONSISTING OF INDOOR CHILLER AND ROOF MOUNTED AIR COOLED CONDENSER WITH CHILLED WATER PUMP. THE SYSTEM IS DDC CONTROLLED WITH ELECTRIC ACTUATION.

THE SYSTEM OPERATES AS FOLLOWS (ALL SUGGESTED SET POINTS AND SETTINGS ARE ADJUSTABLE.):

CHILLER CONTROL
THE CHILLED WATER SYSTEM ENABLE POINT IS CONTROLLED EITHER MANUALLY BY THE OPERATOR OR BY A PROGRAM FUNCTION (I.E., TIME-OF-DAY). IF THE CHILLED WATER SYSTEM ENABLE POINT IS ON AND THERE IS A CALL FOR COOLING BASED ON OUTDDOOR WET BULB TEMPERATURE EXCEEDING 62°F, THE CHILLER AND PUMP ARE STARTED.

AFTER FLOW IS PROVEN, THE CHILLER OPERATES UNDER ITS OPERATING AND SAFETY CONTROLS.

THE CHILLED WATER SYSTEM CONTINUES TO OPERATE UNTIL EITHER THE CHILLED WATER SYSTEM ENABLE POINT IS OFF OR COOLING IS NO LONGER REQUIRED (INDICATED BY ALL AHUS BEING OFF OR ALL COOLING COIL VALVES BEING CLOSED FOR A 30 MINUTE TIME INTERVAL). WHEN THE CHILLED WATER SYSTEM SHUTS DOWN, THE CHILLER AND PUMP GO THROUGH A CHILLER STOP SEQUENCE.

THE CHILLER STOP SEQUENCE FIRST STOPS THE CHILLER. AFTER TIME DELAY, THE CHILLED WATER PUMPS ARE STOPPED.

THE DDC SYSTEM USES CURRENT TRANSMITTER TO CONFIRM THE PUMP IS IN THE DESIRED STATE (I.E. ON OR OFF) AND GENERATES AN ALARM IF STATUS DEVIATES FROM DDC START/STOP CONTROL.

THE DDC SYSTEM MONITORS THE CHILLER ALARM POINT. UPON RECEIPT OF A CHILLER ALARM THE CHILLER AND PUMP GO THROUGH A CHILLER STOP SEQUENCE.

THE OPERATING STATUS OF THE CHILLER IS DETERMINED BY MONITORING THE START/STOP POINT, CHILLER ALARM POINT AND THE CHILLED WATER SUPPLY TEMPERATURE.

INSTALLATION NOTES:

1. CHILLER SHALL HAVE RELAY MOUNTED AT CHILLER .
2. PUMP MOTOR STARTER SHALL HAVE CURRENT TRANSMITTER AND RELAY MOUNTED AT STARTER.
3. CHILLER SHALL HAVE POWER TRANSDUCERS

XFMR - 1
100 VA
LOCATED @ FIELD PANEL

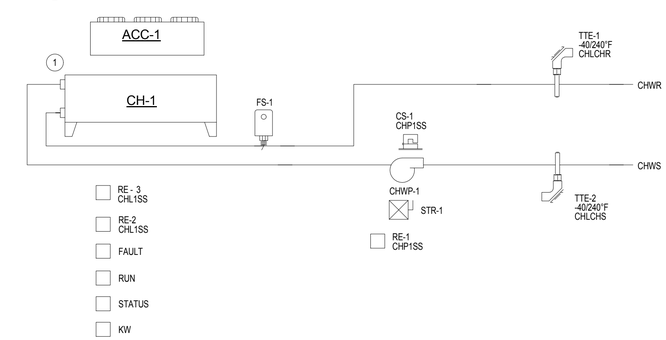

CHILLED WATER SYSTEM CONTROL DIAGRAM

SCALE: NONE | 1 | M8.2 | M8.2

REGISTERED PROFESSIONAL ENGINEER
DONN C. GILMORE
No. 11541
Exp. 9-30-11
MECHANICAL
STATE OF CALIFORNIA

DONN C. GILMORE & ASSOCIATES, INC.
Consulting Mechanical and Electrical Engineers
DCGA
4051 E. La Palma Ave., Ste. A
Anaheim, CA 92807
Ph.: 714.630.4291
Fax: 714.630.4805

DATE	SYM	REVISION	BY	A'PD

NATIONAL AERONAUTICS AND SPACE ADMINISTRATION
DRYDEN FLIGHT RESEARCH CENTER
EDWARDS, CA

DRAWING TITLE
MECHANICAL CONTROLS

PROJECT TITLE
FACILITIES SUPPORT CENTER BUILDING
100% FINAL DESIGN SUBMITTAL

APPROVALS	DATE
Chief, Facilities Engineering Branch, Office DAN CROWLEY	4/14/11
Project Requestor /Customer DAN CROWLEY	4/14/11
Facilities Project Manager GEMMA FLORES	4/14/11
Chief, Office of Protective Services JOHN ZELLMER	4/14/11
Chief - Safety, Health, and Environmental Office DAN MULLEN	4/14/11
DFRC Chief Information Officer KEN NORLIN	4/14/11

DATE STRTD	11/08/10	DATE PRNTD	03/14/11
DRAWN BY		EDM-1703	
SCALE	AS NOTED	TRADE SH. No.	
FILE NAME		M8.2	SHEET No. 136 of 193

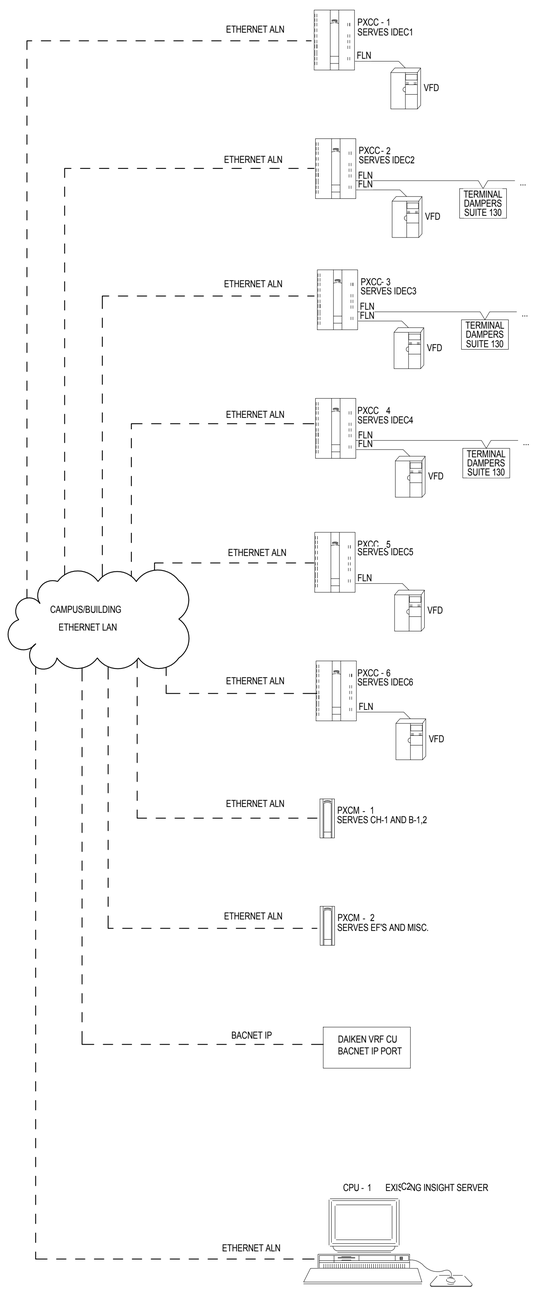

ALN RISER DIAGRAM

SCALE: NONE | 1 | M8.3 | M8.3

NASA Dryden Flight Research Center
Facilities Support Center (FSC) Building
DDC Points List - Rev 1.0 - 03.10.11

NASA Dryden FRC - Facilities Support Center Building (FSC)					
	POINT TYPE				
DESCRIPTION	**DO**	**DI**	**AO**	**AI**	**Notes:**
Energy Labs IDEC Unit (typ 6)					Dedicated controller (PXC) per IDEC
Combo Temp/RH (outside air)				2	one common for building
Outside Air Isolation Damper	6	12			"Open" & "Closed" status, for ATFP
Analog Filter DP transmitter				6	with local indicating transmitter
IDEC recirc pum	6				on/off for IDEC cooling
IDEC pump current draw				6	new CT on pump main power feed
IDEC discharge temp				6	
heating coil valve			6		
heating air temp				6	
cooling coil valve			6		
cooling coil temp				6	
SFAN VFD	6	12	6		points via FLN chip on Apogee network
Supply CFM				6	in-duct air flow station
Duct high static safety					hard-wired safety
Supply smoke detector		6			
supply temp				6	
zone temp				9	2 zone temps for IDEC 1,2, and 3
SUM OF POINTS BY TYPE	18	30	18	53	**119**
Open bay discharge dampers	**DO**	**DI**	**AO**	**AI**	**NOTES**
Suite 140 HVAC duct iso damper	5				
Suite 130 HVAC duct iso damper	5				
Suite 120 HVAC duct iso damper	5				
Suite 140 HVAC duct modu-pitch diffuser			5		
Suite 130 HVAC duct modu-pitch diffuser			5		
Suite 120 HVAC duct modu-pitch diffuser			5		
SUM OF POINTS BY TYPE	15	0	15	0	**30**
Daiken VRF Points (via BACnet/IP connection)	**DO**	**DI**	**AO**	**AI**	**NOTES**
FCU zone temp				15	
FCU cooling enable	15				
FCU fan enable	15				
FCU fan status		15			
FCU set point adjust			15		
Day/Night switchover	15				

NASA Dryden Flight Research Center
Facilities Support Center (FSC) Building
DDC Points List - Rev 1.0 - 03.10.11

SUM OF POINTS BY TYPE	45	15	15	15	**90**
Air cooled chiller					
Chiller Enable	1				
Chiller Fault		1			
Chiller KW				1	
Chiller run status		1			
Chiller alarm		1			
CHW pump enable	1				
CHW pump status		1			
CHWS temp				1	
CHWR temp				1	
Chiller room OA intake louver	1	1			
SUM OF POINTS BY TYPE	**3**	**5**	**0**	**3**	**11**
Heating Hot Water System					
Boiler Enable	2				
Boiler Fault		2			
Boiler run status		2			
Boiler alarm		2			
HW pump enable	2				
HW pump status		2			
HWS temp				3	
HWR temp				1	
Boiler room OA intake louver	1	1			
SUM OF POINTS BY TYPE	**5**	**9**	**0**	**4**	**18**
GRAND TOTAL OF ALL POINTS	**86**	**59**	**48**	**75**	**268**

General information:

Include 8 hours site specific turnover training.

1. Electrical installation of the DDC system shall be in accordance with NASA standards and Siemens standards.
2. Includes mounting devices, wire, conduit, field and panel terminations labor and materials related to the installation of the above points.
3. All Points to be wired back to PXC panels or local controllers.
4. Include FLN comm trunk and 24VAC power to each new terminal controller

Related work by Mechanical Contractor

1. Provision of air/water balance.
2. Installation of new valve control valves as required. All valves located outdoors must be installed vertically.

POINTS LIST

SCALE: NONE | 2 | M8.3 | M8.3

REGISTERED PROFESSIONAL ENGINEER
DONN C. GILMORE
No. 11541
Exp. 9-30-11
MECHANICAL
STATE OF CALIFORNIA

DONN C. GILMORE & ASSOCIATES, INC.
Consulting Mechanical and Electrical Engineers
DCGA
4051 E. La Palma Ave., Ste. A
Anaheim, CA 92807
Ph.: 714.630.4291
Fax: 714.630.4805

DATE	SYM	REVISION	BY	A'PD

NATIONAL AERONAUTICS AND SPACE ADMINISTRATION
DRYDEN FLIGHT RESEARCH CENTER
EDWARDS, CA

DRAWING TITLE
MECHANICAL CONTROLS

PROJECT TITLE
FACILITIES SUPPORT CENTER BUILDING
100% FINAL DESIGN SUBMITTAL

APPROVALS	DATE
Chief, Facilities Engineering & Asset Mgmt. Office **DAN CROWLEY**	4/14/11
Project Requestor /Customer **DAN CROWLEY**	4/14/11
Facilities Project Manager **GEMMA FLORES**	4/14/11
Chief, Office of Protective Services **JOHN ZELLMER**	04/14/11
Chief - Safety, Health, and Environmental Office **DAN MULLEN**	4/14/11
DFRC Chief Information Officer **KEN NORLIN**	4/14/11

DATE STRTD	11/08/10	DATE PRNTD	03/14/11
DRAWN BY		EDM-1703	
SCALE	AS NOTED	TRADE SH. No.	
FILE NAME		M8.3	SHEET No. 137 of 193

PLUMBING GENERAL NOTES

1. THE PLUMBING SYSTEM DESIGN, INSTALLATION AND MATERIALS SHALL CONFORM IN COMPLIANCE WITH THE FOLLOWING CODES AND STANDARDS AS ADOPTED AND AMENDED BY THE AUTHORITY HAVING JURISDICTION. NOTHING IN THESE DRAWINGS IS TO BE CONSTRUED TO PERMIT WORK NOT CONFORMING TO THESE CODES OR OTHER APPLICABLE TO THIS PROJECT. THE EDITION OF THE CALIFORNIA CODE OF REGULATIONS, TITLE 24 (CALIFORNIA BUILDING STANDARDS CODE) APPLIES TO ALL OCCUPANCIES AND CONSISTS OF THE FOLLOWING PARTS:
   - A. PART 1 - 2007 CALIFORNIA BUILDING STANDARDS ADMINISTRATIVE CODE
   - B. PART 2 - 2007 CALIFORNIA BUILDING CODE
   - C. PART 3 - 2007 CALIFORNIA ELECTRICAL CODE
   - D. PART 4 - 2007 CALIFORNIA MECHANICAL CODE
   - E. PART 5 - 2007 CALIFORNIA PLUMBING CODE
   - F. PART 6 - 2007 CALIFORNIA ENERGY CODE
   - G. PART 9 - 2007 CALIFORNIA FIRE CODE
   - H. PART 10 -2007 CALIFORNIA CODE FOR BUILDING CONSERVATION
   - I. 2002 NATIONAL FIRE PROTECTION ASSOCIATION (NFPA) 54
   - J. 2002 NATIONAL FIRE PROTECTION ASSOCIATION (NFPA) 99
   - K. HEALTH AND SAFETY CODE
2. PLUMBING QUALITY AND WEIGHTS OF MATERIALS, ALTERNATE METHODS OF CONSTRUCTION SHALL CONFORM TO CHAPTER 3 OF THE 2007 CALIFORNIA PLUMBING CODE.
3. CONTRACTOR SHALL COORDINATE ALL WORK SHOWN ON THESE DRAWINGS AND SPECIFICATIONS WITH ALL DISCIPLINES AND TRADES PRIOR TO SUBMITTAL OF BID AND INSTALLATION OF SYSTEM.
4. ALL PLUMBING FIXTURE LOCATIONS (WATER CLOSETS, LAVATORIES ETC.) ARE DIAGRAMMATIC AND CONTRACTOR SHALL REFER TO ARCHITECTURAL DRAWINGS FOR HANDICAP FIXTURES, EXACT LOCATIONS, MOUNTING HEIGHTS AND COLOR.
5. ANY DEVIATIONS FROM THE DRAWINGS OR SPECIFICATIONS SHALL BE BROUGHT TO THE ATTENTION OF THE GOVERNMENT REPRESENTATIVE PRIOR TO INSTALLATION.
6. THESE DRAWINGS DO NOT INCLUDE ALL NECESSARY SAFETY REQUIREMENTS. CONTRACTOR TO COMPLY TO SAFETY REQUIREMENTS SET FORTH BY THE LOCAL AUTHORITIES HAVING JURISDICTION.
7. CONTRACTOR SHALL VISIT THE PROJECT SITE PRIOR TO SUBMITTAL OF BID, FAMILIARIZE HIMSELF WITH EXISTING CONDITIONS AND DETAILS OF THE WORK, VERIFY DIMENSIONS IN THE FIELD AND ADVISE GOVERNMENT REPRESENTATIVE OF ANY DISCREPANCY. SUBMITTAL OF BID WILL VERIFY THAT THE CONTRACTOR HAS VISITED THE SITE.
8. TRAP PRIMERS FOR FLOOR DRAINS AND FLOOR SINKS AND WATER HAMMER ARRESTORS TO BE INSTALLED AS PER THE 2007 CPC AND THE LATEST EDITION OF THE AMERICAN SOCIETY OF SANITARY ENGINEERING (ASSE 1010) SIZING AND INSTALLATION REQUIREMENTS.
9. ALL SERVICE WATER HEATING EQUIPMENT TO BE IN COMPLIANCE WITH THE MODEL ENERGY CODE, REQUIREMENTS AND LABELED.
10. CONTRACTOR TO REFER TO PLUMBING FIXTURE SCHEDULE FOR INDIVIDUAL WASTE, VENT & WATER CONNECTIONS AT EACH PLUMBING FIXTURE.
11. ALL HOT & COLD WATER PIPING TO BE INSULATED AS PER 2007 CPC CODE REQUIREMENTS:

PIPE SIZE	INSULATION THICKNESS	INSULATION VALUE
1/2" - 1"	1-1/2"	R = 4.0
1-1/4" - 3"	1-1/2"	R = 4.0
3" AND LARGER	2"	R = 4.0

12. TEST SYSTEM(S) IN ACCORDANCE WITH REQUIREMENTS OF THE GOVERNING AUTHORITIES.
13. STEEL PLATE SUPPORTS FOR ALL WALL FIXTURES: SUPPORT WITH 3/8" THICK x 8" HIGH STEEL PLATES RECESSED AND BOLTED TO STUDS AND TAPPED FOR FIXTURE BOLTS. LENGTH OF PLATE AT LEAST ON STUD BEYOND FIXTURE, UNLESS CARRIERS ARE SPECIFIED.
14. ALL PLUMBING WORK SHALL BE INSTALLED SO AS TO AVOID INTERFERENCE WITH ELECTRICAL AND MECHANICAL EQUIPMENT AND STRUCTURAL FRAMING.
15. ALL INDIRECT WASTE PIPING ON ROOF SHALL BE TYPE "M" COPPER SUPPORTED WITH PREASSEMBLED HIGH DENSITY POLYPROPYLENE PLASTIC SUPER SLEEPER SYSTEM. SLEEPERS ARE HEIGHT ADJUSTABLE AND SHALL BE SET IN MASTIC AT 6'-0" O.C. PIPING SHALL BE SLOPED TO AND TERMINATED AT AN APPROVED RECEPTOR.
16. ALL CLEANOUTS SHALL BE INSTALLED WHERE READILY ACCESSIBLE AND LOCATED AS PER CODE REQUIREMENTS. THE CONTRACTOR SHALL COORDINATE ALL CLEAN OUT LOCATIONS WITH EQUIPMENT, CABINETS, ETC., AND THE ARCHITECT PRIOR TO ANY INSTALLATION.
17. ALL PLUMBING FIXTURE VENTS TO TERMINATE A MIN. OF 12 INCHES FROM ANY VERTICAL SURFACE AND 25 FEET FROM OR TERMINATED 3'-0" ABOVE ANY OUTSIDE AIR INTAKES.
18. ALL PIPING DISCHARGING INTO FLOOR-SINKS AND/OR FLOOR-DRAINS TO HAVE A MINIMUM AIRGAP AS REQUIRED BY LOCAL CODES.
19. ALL VALVES, UNIONS, ETC. TO BE SAME SIZE AS LINE SIZE UNLESS OTHERWISE INDICATED ON DRAWINGS.
20. UNIONS SHALL BE PROVIDED AND INSTALLED AFTER EACH SCREW-TYPE VALVE AND PRIOR TO EQUIPMENT CONNECTIONS.
21. ALL EQUIPMENT SHALL BE LATERALLY SUPPORTED IN ALL DIRECTIONS TO RESIST A MINIMUM AIRGAP AS REQUIRED BY LOCAL CODES.
22. BEFORE FABRICATION OR INSTALLATION, THIS CONTRACTOR SHALL VERIFY EXACT LOCATIONS OF ALL MECHANICAL EQUIPMENT AND EQUIPMENT PROVIDED UNDER ANOTHER SECTION OF SPECIFICATIONS. EXACT ROUGH-IN LOCATIONS AND REQUIREMENTS SHALL BE COORDINATED IN FIELD.
23. IF SOILS REPORT INDICATES THAT LOCAL SOIL IS CORROSIVE, ALL UNDERGROUND METALLIC PIPE AND FITTINGS SHALL BE PROTECTED IN ACCORDANCE WITH THE SOILS ENGINEER'S RECOMMENDATIONS.
24. NO PIPING SHALL BE DIRECTLY EMBEDDED IN CONCRETE OR MASONRY WALLS OR FOOTING.
25. THE PLUMBING CONTRACTOR SHALL COORDINATE ALL REQUIREMENTS FOR ALL POINTS OF CONNECTION WITH THE GENERAL CONTRACTOR AND OTHER TRADES PRIOR TO BID.
26. ALL WASTE AND VENT PIPING SHALL SLOPE AT 2%. IF LESS THAN 2%, APPROVAL MUST BE OBTAINED FROM BUILDING OFFICIAL OR AUTHORITY HAVING JURISDICTION PRIOR TO INSTALLATION AND REFER TO NOTE 5.
27. ALL VALVES, TRAP PRIMERS, WATER HAMMER ARRESTORS OR OTHER EQUIPMENT SHOWN IN WALLS OR ABOVE NON-ACCESSIBLE CEILINGS SHALL BE INSTALLED BEHIND AN ACCESS PANEL.
28. ALL HORIZONTAL PIPING LINES EXTENDED AND CONNECTED TO EQUIPMENT SHALL BE RUN AT THE HIGHEST POSSIBLE ELEVATIONS AND NOT LESS THAN 6" ABOVE THE FLOOR TO PROVIDE CLEARANCE FOR CLEANING. AT WALL OR COLUMN LOCATIONS, PIPING ROUGH-IN SHALL BE STUBBED IN WALLS WHENEVER POSSIBLE.
29. THESE DRAWINGS SHALL BE READ IN CONJUNCTION WITH AND BE CONSIDERED TO BE A PART OF SEPARATE COMPLETE PLUMBING SPECIFICATION.
30. THE CONTRACTOR SHALL BE RESPONSIBLE FOR PATCHING AND REPAIRING ALL AREAS INCLUDING ADJACENT AREAS WHICH ARE EXCAVATED AND/OR DAMAGED BY HIS OPERATIONS. IN ADDITION, THE CONTRACTOR SHALL RESTORE TO THEIR ORIGINAL CONDITION ALL AREAS DAMAGED BY HIS OPERATIONS.
31. ALL CONNECTIONS TO EXISTING SERVICES SHALL BE MADE SUCH THAT INTERRUPTION TIME WILL BE AS SHORT AS POSSIBLE. THE CONTRACTOR SHALL GIVE THE GOVERNMENT REPRESENTATIVE SUFFICIENT NOTICE OF SUCH INTERRUPTION AND THE ACTUAL SHUT-DOWN TIME SHALL BE AT A TIME DESIGNATED BY THE GOVERNMENT REPRESENTATIVE.
32. ALL CUTTING OF EXISTING PAVING, WALKS AND/OR FLOORS SHALL BE BY MACHINE SAW CUTTING. HOLES FOR PIPES IN CONCRETE WALLS OR FLOORS SHALL BE DONE USING CORE DRILLING EQUIPMENT.
33. VERIFY EXACT LOCATIONS, DEPTH AND SIZE OF ALL PIPING TO WHICH CONNECTIONS ARE REQUIRED. FINAL CONNECTIONS TO EXISTING UTILITIES SHALL BE BY THIS CONTRACTOR.
34. ALL NEW OR REPAIRED DOMESTIC HOT AND COLD WATER SYSTEM SHALL BE DISINFECTED BY WATER-CHLORINIZATION PRIOR TO USE. THE METHOD SHALL BE PRESCRIBED BY THE HEALTH AUTHORITY OR CPC SECTION 609. BACTERIOLOGICAL TESTING SHALL BE PERFORMED BY INDEPENDENT THIRD PARTY TESTING LABORATORY. SEE SPECIFICATION SECTION 22 00 00, SUB SECTION 3.8.5
35. ALL PLUMBING FIXTURES SPECIFIED MEET THE MINIMUM FLOW REQUIREMENTS TO MEET "LEED" CREDITS

PLUMBING LEGEND & ABBREVIATION

SYMBOL	ABBREV	PIPE DESCRIPTION
W	W	WASTE
GW	GW	GREY WASTE
V	V	VENT
CW	CW	COLD WATER
HW	HW	HOT WATER
HWR	HWR	HOT WATER RETURN
G	G	GAS
CD	CD	CONDENSATE DRAIN
D	D	EVAP. COOLER DRAIN
SD	SD	STORM DRAIN
OD	OD	OVERFLOW DRAIN
RW	RW	RECLAIMED WATER
CA	CA	COMPRESSED AIR
	UP	PIPE UP/RISER
	DN	PIPE TEE DOWN
	DN	PIPE DOWN
	FCO	FLOOR CLEANOUT
	COTG	CLEANOUT TO GRADE
	WCO	WALL CLEANOUT
	SOV	SHUT-OFF VALVE
	CV	CHECK VALVE
	U	UNION
	GSOV	GAS COCK SHUT-OFF VALVE
	AGSOV	AUTOMATIC GAS SHUT-OFF VALVE
(E)	EXIST	EXISTING EQUIPMENT/PIPING
	POC	POINT OF CONNECTION
	POD	POINT OF DISCONNECTION
(#)	FU	FIXTURE UNIT
	ABV	ABOVE
	ADA	AMERICAN DISABILITIES ACT
	AFF	ABOVE FINISH FLOOR
	AFG	ABOVE FINISH GRADE
	AP	ACCESS PANEL
	BEL	BELOW
	CLG	CEILING
	CONN	CONNECTION
	CONT	CONTINUATION
	DN	DOWN
	FLR	FLOOR
	FU	FIXTURE UNITS
	GPM	GALLONS PER MINUTE
	ICW	INDUSTRIAL COLD WATER
	IE	INVERT ELEVATION
	INT	INTEGRAL
	PSI	POUNDS PER SQUARE INCH
	T/PRV	TEMPERATURE & PRESSURE RELIEF VALVE
	TYP	TYPICAL
	W/	WITH
GM	GM	GAS MEETER
	RSW	RECLAIMED WATER SYSTEM

NATURAL GAS PIPE SIZING

PIPE SIZE INCHES	MAX DELIVERY CAP (CFH) AT .5 INCH W.C. LENGTH IN FEET								
	10	20	30	40	50	60	70	80	90
1/2	174	119	96	82	73	66	61	56	53
3/4	363	249	200	171	152	138	127	118	111
1	684	470	377	232	286	259	239	222	208
1-1/4	1404	965	775	663	588	532	490	456	428
1-1/2	2103	1445	1161	993	880	798	734	683	641
2	4050	2784	2235	1913	1696	1536	1413	1315	1234

PLUMBING MATERIAL SCHEDULE

A. WATER PIPE - TYPE 'L' COPPER WITH WROUGHT COPPER FITTINGS AND 95/5 LEAD FREE SOLDER AT 3 PSI/100 FT WITH MAX VELOCITY OF 8 FT/S FOR COLD WATER AND 5 FT/S FOR HOT WATER.

B. ALL HOT WATER AND HOT WATER RETURN PIPING SHALL BE INSULATED WITH INSULATION HAVING A K-FACTOR OF 0.25.

C. SEWER AND VENT PIPE - ABS PIPE AND FITTINGS, GRAVITY AT 2% SLOPE FOR BELOW FLOOR, AND PVC PIPES & FITTINGS FOR ABOVE FLOOR INSTALLATION.

D. STORM AND OVERFLOW DRAIN - HUBLESS CAST IRON SOIL PIPE AND FITTINGS WITH HUSKY FOUR BANDED STAINLESS STEEL COUPLING, FOR ABOVE AND BELOW FLOOR.

E. GAS - BLACK STEEL SCHEDULE 40 SCREWED FITTING INSIDE, OUTSIDE PIPE SHALL BE POLYETHYLENE BUTYL-A WITH #12 BARE TRACE WIRE.

F. ANCHOR WATER SUPPLY PIPING IN WALL WITH CAST BRASS OR WROUGHT COPPER 90° DROP ELL FITTING AS MANUFACTURED BY NIBCO OR APPROVED EQUAL.

G. SUPPORT PIPING WTH CLEVIS OR SPLIT RING TYPE HANGERS. "PLUMBERS TAPE" OR WIRE IS NOT PERMITTED.

WATER CALCULATION

STREET PRESSURE (ASSUMED).....	70	PSI
SYSTEM DESIGN	70	PSI
PRESSURE LOSSES:		
STATIC 15 x 0.433.....	6.5	PSI
2 METER AT 60 GPM.....	3.5	PSI
RESIDUAL REQUIRED AT WATER CLOSET.....	30	PSI
PRESSURE REDUCING VALVE	0	PSI
BACKFLOW PREVENTER	12	PSI
SUB TOTAL PRESSURE LOSSES	52	PSI
PRESSURE AVAILABLE FOR FRICTION LOSS:		
SYSTEM DESIGN - SUB TOTAL LOSSES [70 - 52] = ...	16	PSI
SYSTEM DEVELOPED LENGTH 190 + 20% = ...	228	FT
[(16 x 100) / 228] = 7 PSI LOSS PER 100 FT		
COLD WATER MAX VELOCITY	8 FT/S	
HOT WATER MAX VELOCITY	5 FT/S	

WATER CALCULATION

PIPE SIZE	COLD WATER				HOT WATER		
	FLOW GPM	FL-TANK FIXT. UNIT	FL-VALVE FIXT. UNIT	VELOCITY FT./SEC.	FLOW GPM	FL-TANK FIXT. UNIT	VELOCITY FT./SEC.
1/2"	2	1	1	-	2	1	-
3/4"	5	6	6	-	5	6	-
1"	10	16	16	-	10	16	-
1-1/4"	19	28	28	-	19	28	-
1-1/2"	30	54	54	-	30	54	-
2"	55	151	151	-	55	151	-
2-1/2"	93	347	347	-	93	347	-
3"	125	506	506	-	125	506	-

PLUMBING FIXTURE UNIT COUNT

FIXTURE	QUANTITY	FIXTURE UNITS - F.U.			
		C.W.	WASTE	SUB-TOTAL C.W.	SUB-TOTAL WASTE
WATER CLOSET	11	10	6	110	66
LAVATORY	8	1	1	8	8
URINAL	4	5	2	20	8
MOP SINK	2	3	4	6	8
KITCHEN SINK	1	2	2	2	2
FLOOR DRAIN	10	-	2	-	20
DRINKING FOUNTAIN	2	1	1	2	2
HOSE BIBB	3	5	-	15	-
FLOOR SINK	1	-	6	-	6
SHOWERS	6	2	2	12	12
TOTAL				175 F.U.	132 F.U.

REGISTERED PROFESSIONAL ENGINEER
DONN C. GILMORE
No. 11541
Exp. 9-30-11
MECHANICAL
STATE OF CALIFORNIA

DONN C. GILMORE & ASSOCIATES, INC.
Consulting Mechanical and Electrical Engineers
DCGA
4051 E. La Palma Ave., Ste. A
Anaheim, CA. 92807
Ph.: 714.630.4291
Fax: 714.630.4805

DATE	SYM	REVISION	BY	A'PD

NATIONAL AERONAUTICS AND SPACE ADMINISTRATION

DRYDEN FLIGHT RESEARCH CENTER
EDWARDS, CA

DRAWING TITLE

PLUMBING NOTES, LEGEND AND ABBREVIATIONS

PROJECT TITLE

FACILITIES SUPPORT CENTER BUILDING
100% FINAL DESIGN SUBMITTAL

APPROVALS	DATE
Chief, Facilities Engineering & Asset Mgmt. Office DAN CROWLEY	4/14/11
Project Requestor /Customer DAN CROWLEY	4/14/11
Facilities Project Manager GEMMA FLORES	4/14/11
Chief, Office of Protective Services JOHN ZELLMER	4/14/11
Chief - Safety, Health, and Environmental Office DAN MULLEN	4/14/11
DFRC Chief Information Officer KEN NORLIN	4/14/11

DATE STRTD	11/08/10	DATE PRNTD	03/14/11
DRAWN BY		EDM-1703	
SCALE	AS NOTED	TRADE SH. No. P0.1	
FILE NAME		SHEET No. 138 of 193	

PLUMBING FIXTURE SCHEDULE

SYMBOL	FIXTURE	ROUGH-IN SIZE S	TRAP	V	CW	HW	DESCRIPTION / REMARKS
WC 1	WATER CLOSET 15"HIGH ADULT WALL HUNG	4"	INTEGRAL	2"	1-1/2"	-	KOHLER "KINGSTON" K-4325, 1.28 GPF, (HET) WALL HUNG VITREOUS CHINA, ELONGATED BOWL, COMPLETE WITH SLOAN "ROYAL" 111-1.28 GPF FLUSH VALVE, BEMIS 1955C OPEN FRONT SEAT LESS COVER AND J.R. SMITH 0210R WATER CLOSET CARRIER. (INDICATED MANUFACTURER OR APPROVED EQUAL FOR ALL COMPONENTS.)
WC 2	WATER CLOSET 17" HIGH ADA WALL HUNG	4"	INTEGRAL	2"	1-1/2"	-	KOHLER "KINGSTON" K-4325, 1.28 GPF, (HET) WALL HUNG VITREOUS CHINA, ELONGATED BOWL, COMPLETE WITH SLOAN "ROYAL" 111-1.28 GPF FLUSH VALVE, BEMIS 1955C OPEN FRONT SEAT LESS COVER AND J.R. SMITH 0210R WATER CLOSET CARRIER. (INDICATED MANUFACTURER OR APPROVED EQUAL FOR ALL COMPONENTS.)
UR 1	URINAL 24"HIGH ADULT (TOILET RM)	2"	INTEGRAL	1-1/2"	3/4"	-	KOHLER "BARDON 1/8TH GPF" K-4904-ET, 0.125 GPF, (HET), WALL HUNG, VITREOUS CHINA, 14" EXTENDED RIM, COMPLETE WITH SLOAN "ROYAL" 186-0.13 GPF FLUSH VALVE AND J.R. SMITH 0637 URINAL SUPPORT. (INDICATED MANUFACTURER OR APPROVED EQUAL FOR ALL COMPONENTS.)
UR 2	URINAL 17"HIGH ADA (TOILET RM)	2"	INTEGRAL	1-1/2"	3/4"	-	KOHLER "BARDON 1/8TH GPF" K-4904-ET, 0.125 GPF, (HET), WALL HUNG, VITREOUS CHINA, 14" EXTENDED RIM, COMPLETE WITH SLOAN "ROYAL" 186-0.13 GPF FLUSH VALVE AND J.R. SMITH 0637 URINAL SUPPORT. (INDICATED MANUFACTURER OR APPROVED EQUAL FOR ALL COMPONENTS.) SET TOP OF RIM AT +17" A.F.F.
L 1	LAVATORY 34"HIGH ADA (TOILET RM)	2"	1-1/4" x 1-1/2"	1-1/2"	1/2"	1/2"	BRADLEY "TERREON LAV DECK" LD-3010-2 TERREON LAVATORY DECK WITH (2) INTEGRAL BOWLS, CENTER SHANK FAUCET DRILLING, SIDE APRONS, FRONT APRON, BACK SPLASH AND SIDE SPLASHES PROVIDE (2) LD-TRAP STAINLESS STEEL TRAP COVERS AND (2) D-ASSY DRAIN, STRAINER TAILPIECE. (2) DELTA 601T050 DECK MOUNTED, CHROME PLATED, BATTERY OPERATED, ELECTRONIC LAVATORY FAUCET, WITH PROXIMITY SENSING TECHNOLOGY. (2) DELTA R2970-MIX THERMOSTATIC MIXING VALVE. PROVIDE T & S STOPS AND SUPPLIES . CHROME PLATED 17 GA. L.A. PATTERN CAST BRASS P-TRAP. (INDICATED MANUFACTURER OR APPROVED EQUAL FOR ALL COMPONENTS.) SET TOP OF LAV AT +34" A.F.F.
L 2	LAVATORY 34"HIGH ADA (TOILET RM)	2"	1-1/4" x 1-1/2"	1-1/2"	1/2"	1/2"	BRADLEY "TERREON LAV DECK" LD-3010-3 TERREON LAVATORY DECK WITH (3) INTEGRAL BOWLS, CENTER SHANK FAUCET DRILLING, SIDE APRONS, FRONT APRON, BACK SPLASH AND SIDE SPLASHES PROVIDE (3) LD-TRAP STAINLESS STEEL TRAP COVERS AND (3) D-ASSY DRAIN, STRAINER TAILPIECE. (3) DELTA 601T050 DECK MOUNTED, CHROME PLATED, BATTERY OPERATED, ELECTRONIC LAVATORY FAUCET, WITH PROXIMITY SENSING TECHNOLOGY. (2) DELTA R2970-MIX THERMOSTATIC MIXING VALVE. PROVIDE T & S STOPS AND SUPPLIES. CHROME PLATED 17 GA. L.A. PATTERN CAST BRASS P-TRAP. (INDICATED MANUFACTURER OR APPROVED EQUAL FOR ALL COMPONENTS.) SET TOP OF LAV AT +34" A.F.F.
KS 1	KITCHEN SINK (BREAK RM)	2"	1-1/2"	1-1/2"	1/2"	1/2"	JUST DL-ADA-2233-A-GR, 22"x33"x6" DEEP, DOUBLE COMP., 18 GA STAINLESS STEEL SINK WITH (3) FAUCET HOLES ON 4" CENTERS. JUST J-ADA-35 STAINLESS STEEL CUP STRAINER WITH OFFSET TAILPIECE. DELTA 476 "WATERFALL-PULL OUT" SINGLE HANDLE, WIDE SPREAD. DECK MOUNTED, PROVIDE COMPLETE WITH SOAP DISPENSER AND LOOP HANDLE. PROVIDE T & S STOPS AND SUPPLIES. CHROME PLATED 17 GA L.A. PATTERN CAST BRASS P-TRAP. P-TRAP AND WATER SUPPLIES SHALL BE COVERED FOR ACCESSIBLE SCALD PROTECTION. (INDICATED MANUFACTURER OR APPROVED EQUAL FOR ALL COMPONENTS.)
GD 1	GARBAGE DISPOSER (BREAK RM)	2"	1-1/2"	-	-	-	IN-SINK-ERATOR BADGER 5XP CONTINUOUS FEED WITH WALL SWITCH. 3/4" H.P. 120V, 1PH, 60HZ.
SS 1	SERVICE SINK (JANITOR'S RM)	3"	3"	2"	3/4"	3/4"	KOHLER "WHITBY" K-6710, CAST IRON WITH ACID RESISTANT ENAMEL FINISH, FLOOR MTD., KOHLER K-8940 WIRE RIM GUARD. KOHLER K-9146 SERVICE SINK STRAINER. DELTA 28C8073 TWO HANDLE 8" WALL MOUNTER SERVICE SINK FAUCET, ROUGH CHROME PLATED, SPOUT END VACUUM BREAKER WITH GARDEN HOSE END, 48" HOSE STAINLESS STEEL HANGER. (INDICATED MANUFACTURERS OR APPROVED EQUAL FOR ALL COMPONENTS.
EWC 1	ELECTRIC WATER COOLER 27" KNEE CLR ADA	2"	1-1/4" x 1-1/2"	1-1/2"	1/2"	-	HAWS HWUACP8LSS "HI-LO" PRESSURE DRINKING WATER COOLER 8 GPH, FRONT AND SIDE MOUNTED PUSH PADS AND STAINLESS STEEL FINISH OR APPROVED EQUAL. 1/5 HP, 120V, 1PH, 60HZ.
HB 1	HOSE BIBB EXTERIOR WALL	-	-	-	3/4"	-	WALL MOUNTED CAST BRASS FREEZE PROOF HOSE BIBB. MANUFACTURED BY WOODFORD OR APPROVED EQUAL.
HB 2	HOSE BIBB ROOF	-	-	-	3/4"	-	ROOF MOUNTED CAST BRASS FREEZE PROOF HOSE BIBB, WITH DUAL CHECK BACKFLOW PREVENTER, ROOF MOUNTING ASSEMBLY WITH UNDERDECK FLANGE, NO DRAIN REQUIRED. HOSE BIBB MODEL NO. SRH-M5 MANUFACTURED BY WOODFORD OR APPROVED EQUAL.
FD 1	FLOOR DRAIN	3"	3"	2"	-	-	COATED CAST IRON BODY WITH DOUBLE DRAINAGE FLANGE, BOTTOM OUTLET, ADJUSTABLE SATIN FINISH BRONZE STAINE, MANUFACTURED BY JOSAM OR APPROVED EQUAL.
FS 1	FLOOR SINK	3"	3"	2"	-	-	DUCO CAST IRON BODY WITH ACID RESISTANT INTERIOR COATING. PROVIDE 1/2 GRATE COVER. MANUFACTURED BY JOSAM OR APPROVED EQUAL.
RD 1	ROOF DRAIN	SEE PLANS FOR SIZE					DUCO COATED CAST IRON ROOF DRAIN WITH LARGE SUMP AND POLYPROPYLENE LOCKING DOME. PROVIDE UNDERDECK CLAMP. ROOF DRAIN MANUFACTURED BY JOSAM OR APPROVED EQUAL. PROVIDE WITH DOWNSPOUT FILTER ASSEMBLY CORROSION RESISTANT STAINLESS STEEL, FLOWGUARD FGDS4 OR APPROVED EQUAL.
OD 1	OVERFLOW DRAIN	SEE PLANS FOR SIZE					DUCO CAST IRON OVERLFOW DRAIN WITH INTERNAL WATER GUARD AND LARGE POLYPROPYLENE LOCKING DOME. ROOF OVERFLOW DRAIN MANUFACTURED BY JOSAM OR APPROVED EQUAL. PROVIDE WITH DOWNSPOUT FILTER ASSEMBLY CORROSION RESISTANT STAINLESS STEEL, FLOWGUARD FGDS4 OR APPROVED EQUAL.
WH 1	DOMESTIC HOT WATER HEATER	-	-	-	3/4"	3/4"	ENERGY STAR GAS FIRED TANKLESS WATER HEATER , HEAVY DUTY RATED AT 7.4 & GPM, 199,000 BTU INPUT. PROVIDE P & TPRV. PROVIDE 4" FLUE THRU ROOF VENT. MANUFACTURED BY RHEEM OR APPROVED EQUAL. PROVIDE WITH MANIFOLD CONTROLLER. 120V/60HZ, 3AMP.
WH 2	DOMESTIC HOT WATER HEATER	-	-	-	3/4"	3/4"	ENERGY STAR GAS FIRED TANKLESS WATER HEATER , HEAVY DUTY RATED AT 7.4 & GPM, 199,000 BTU INPUT. PROVIDE P & TPRV. PROVIDE 4" FLUE THRU ROOF VENT. MANUFACTURED BY RHEEM OR APPROVED EQUAL
ET 1	EXPANSION TANK	-	-	-	3/4"	-	THERMALLY FUSED EPOXY LINER WITH RUGGED FLEXIBLE BUTYL DIAPHRAGM FIELD ADJUSTABLE PRE-CHARGED TANK MANUFACTURED BY WATTS OR APPROVED EQUAL
CP 1	CIRCULATING PUMP	-	-	-	-	3/4"	INLINE CIRCULATORS RATED AT 10GPM AT 25FT HD. 1/6HP, 120V, 1PH, 60HZ QUITE OPERATION BRONZE BODY. MANUFACTURED BY ARMSTRONG PUMP INC OR APPROVED EQUAL.
WHA 1	WATER HAMMER ARRESTOR (TOILET ROOM)	-	-	-	3/4"	-	PISTON TYPE WATER HAMMER ARRESTOR, THICK WALLED ONE PIECE SEAMLESS COPPER BODY, SIZED PER PDI-WH-201.
TP 1	TRAP PRIMER	-	-	-	3/4"	-	TRAP PRIMER VALVE WITH TRAP PRIMER DISTRIBUTION UNIT. MACHINED CORROSION RESISTANT BRASS. MANUFACTURED BY PRECISION PLUMBING PRODUCTOR OR APPROVED EQUAL.
BFP 1	REDUCED PRESS. BACKFLOW PREVENTER	-	-	-	-	-	REDUCED PRESSURE BACK FLOW PREVENTER MANUFACTURED BY WATTS OR APPROVED EQUAL.
SHR 1	SHOWER TRIM	-	-	-	1/2"	1/2"	PRESSURE BALANCED VALVES WITH SHOWER HEAD EQUAL FLOW IC-C5 HIGH POLISHED CHROME FINISH. MANUFACTURED BY BRADLEY OR APPROVED EQUAL.
SHR 2	SHOWER TRIM (HANDICAP)	-	-	-	1/2"	1/2"	SAME ABOVE EXCEPT WITH RETRACTABLE HAND SHOWER WITH MOUNTING BAR. MANUFACTURED BY BRADLEY OR APPROVED EQUAL.
LHB 1	LAUNDRY HOSE BOX	3"	3"	2"	3/4"	3/4"	RECESSED WASHING MACHINE VALVE WITH SWEAT CONNECTION VALVE. PROVIDE WITH 2" CENTER DRAIN ABS PIPE MANUFACTURED BY GUYGRAX OR APPROVED EQUAL
EES 1	EMERGENCY EYEWASH SHOWER	-	-	-	-	-	COMBINATION SHOWER EYE/FACE WASH, SHALL INCLUDE S.S. 11" ROUND BOWL, AN ANTIMICROBIALY TREATED EYE/FACE WASH HEAD. 10-5/8" ABS PLASTIC SHOWER HEAD WITH 20 GPM FLOW CONTROL. MANUFACTURER BY HAWS OR APPROVED EQUAL
S 1	SINK	2"	2"	1-1/2"	1/2"	1/2"	STAINLESS STEEL, 18 GAUGE, SELF-RIMMING SINK 17-1/2"x19"x7-1/2" DEEP WITH LEDGE MOUNTED FAUCET WITH GOOSENECK SPOUT AND 4" WRIST BLADE HANDLES. PROVIDE WITH CRUMB CUP STRAINER. SINK AND FAUCET MANUFACTURED BY JUST OR APPROVED.
S 2	SINK (SHOP/LAB)	2"	2"	1-1/2"	1/2"	1/2"	STAINLESS STEEL, 18 GAUGE, SELF-RIMMING SINK 21"x33"x10-1/2" DEEP WITH LEDGE MOUNTED FAUCET WITH GOOSENECK SPOUT, AND 4" WRIST BLADE HANDLES. PROVIDE WITH STAINLESS STEEL GRID DRAIN. SINK AND FAUCET MANUFACTURED BY JUST MANUFACTURING OR APPROVED EQUAL.
PRV 1	PRESSURE REDUCING VALVE	-	-	-	VARIES	VARIES	ALL BRONZE BODY AND BELL HOUSING, PRESSURE RATED AT 300 PSI, SPRING RANGE 25 TO 75 PSI, FACTORY SET AT 50 PSI. PRV MANUFACTURED BY WILKINS OR APPROVED EQUAL.

RECLAIM WATER EQUIPMENT

SYMBOL	NAME	DESCRIPTION / REMARKS
RWS 1	RECLAIM WATER SYSTEM	UNIT SHALL BE COMPLETELY FACTORY PREFRABRICATED, FACTORY TESTED AND GUARANTEED GRAY WATER RECOVERY AND TREATMENT SYSTEM. ENTIRE PACKAGE SHALL BE ASSEMBLED HORIZONTAL BY MANUFACTURER THAT PRODUCES PREFRABRICATED EQUIPMENT LISTED BY UNDERWRITERS LABORATORIES (U.L.) SYSTEM SHALL FILTER AND DISINFECT WATER TO MAINTAIN (OXIDATION REDUCTION POTENTIAL) OF 400 MV OR MORE. SYSTEM SHALL CONSIST OF THE FOLLOWING: -DISTRIBUTION PUMPS -WATER TREATMENT SYSTEM CONSIST OF: -OZONE GENERATORS -AIR PREPARATION UNIT -FILTERS -OZONE INJECTION AND DISTRIBUTION WITH SELF PRIMMING CIRCULATION PUMP. -U/G COLLECTION TANK -SAFETY AND ALARM COMPONENTS -PUMP CONTROLS AND CONTROL PANELS -GAUGES -PRESSURE REGULATING VALVE PILOT OPERATED OZONE COMPATIBLE -HYDROPNEUMATIC TANK -FACTORY ASSEMBLED IN COMMON STEEL BASE -TESTING / WARRANTY -START UP AND SERVICE.

PLUMBING EQUIPMENT SCHEDULE

SYMBOL	NAME	DESCRIPTION / REMARKS
AC 1	AIR COMPRESSOR	TANK MOUNTED AIR COMPRESSOR 7-1/2 H.P. WITH ASME 120 GALLON AIR RECEIVER INCLUDING PRESSURE RELIEF VALVE, DRAIN VALVE 9' SERVICE VALVE. 990 RPM, CFM DISP 28.7, 23.4 CFM DELIVERY AT 125 PSI RATING, MANUFACTURED BY CHAMPION OR APPROVED EQUAL.
RAD 1	REFRIGERATED AIR DRYER	REFRIGERATED AIR DRYER CYCLING DRYER, CAPACITY 24CFM @ 38°F PRESSURE DEWPOINT WALL MOUNTED, DIMENSION 14"Lx13"Dx15"H, 7.3FLA, 115V, 1HP, 60HZ OPTG WT 90 LBS MANUFACTURED BY CHAMPION OR APPROVED EQUAL.

REGISTERED PROFESSIONAL ENGINEER
DONN C. GILMORE
No. 11541
Exp. 9-30-11
MECHANICAL
STATE OF CALIFORNIA

DONN C. GILMORE & ASSOCIATES, INC.
Consulting Mechanical and Electrical Engineers
DCGA
4051 E. La Palma Ave., Ste. A
Anaheim, CA 92807
Ph.: 714.630.4291
Fax: 714.630.4805

DATE	SYM	REVISION	BY	A'PD

NATIONAL AERONAUTICS AND SPACE ADMINISTRATION
DRYDEN FLIGHT RESEARCH CENTER
EDWARDS, CA

DRAWING TITLE
SCHEDULES

PROJECT TITLE
FACILITIES SUPPORT CENTER BUILDING
100% FINAL DESIGN SUBMITTAL

APPROVALS		DATE
Chief, Facilities Engineering Division Project Office DAN CROWLEY		4/14/11
Project Requestor /Customer DAN CROWLEY		4/14/11
Facilities Project Manager GEMMA FLORES		4/14/11
Chief, Office of Protective Services JOHN ZELLMER		4/14/11
Chief - Safety, Health, and Environmental Office DAN MULLEN		4/14/11
DFRC Chief Information Officer KEN NORLIN		4/14/11

DATE STRTD	11/08/10	DATE PRNTD	03/14/11
DRAWN BY		EDM-1703	
SCALE	AS NOTED	TRADE SH. No.	
FILE NAME		P0.2	SHEET No. 139 of 193

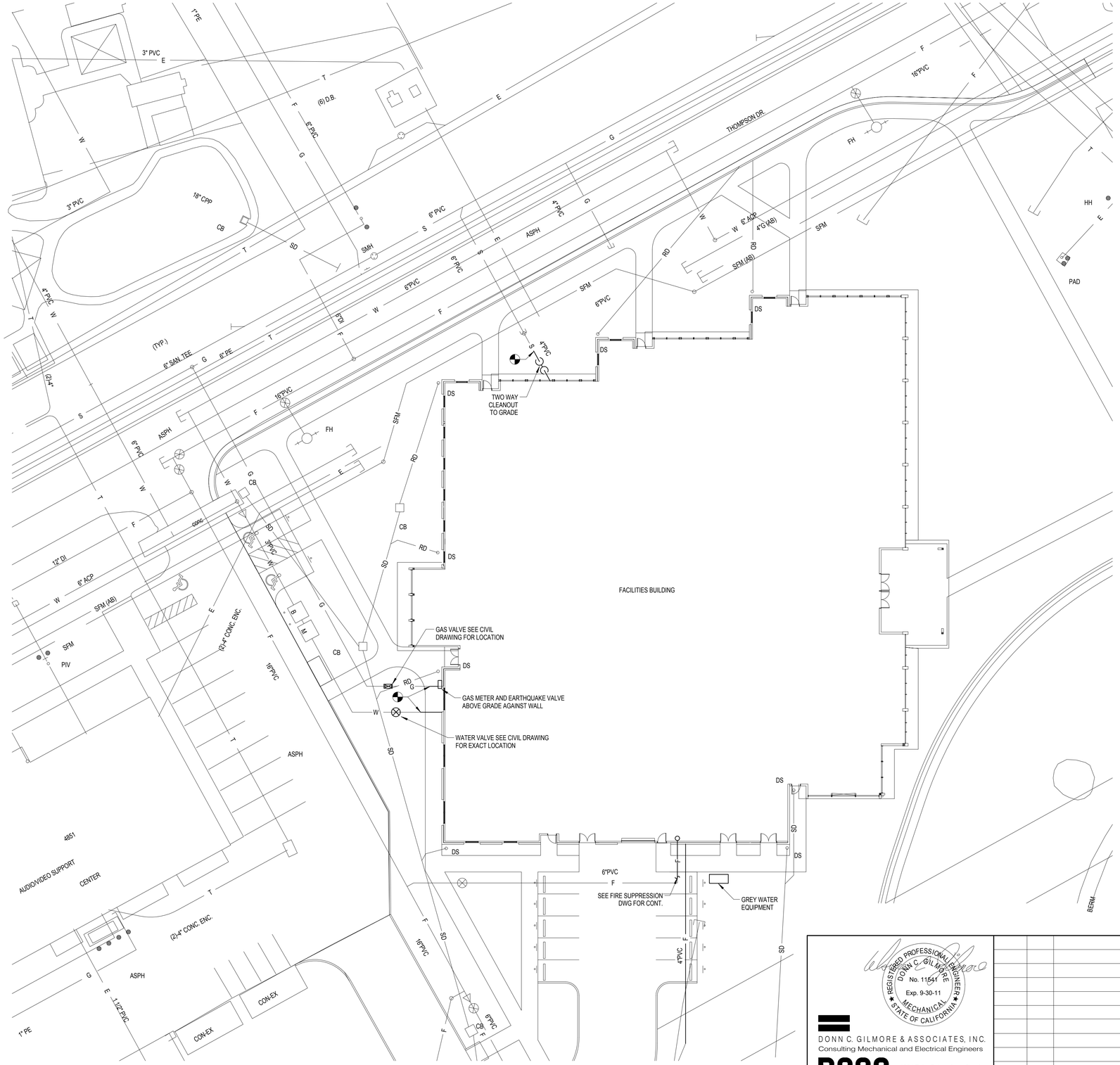

DONN C. GILMORE & ASSOCIATES, INC.
Consulting Mechanical and Electrical Engineers

DCGA

4051 E. La Palma Ave., Ste. A
Anaheim, CA. 92807
Ph.: 714.630.4291
Fax: 714.630.4805

REGISTERED PROFESSIONAL ENGINEER — DONN C. GILMORE — No. 11541 — Exp. 9-30-11 — MECHANICAL — STATE OF CALIFORNIA

DATE	SYM	REVISION	BY	A'PD

NATIONAL AERONAUTICS AND SPACE ADMINISTRATION

DRYDEN FLIGHT RESEARCH CENTER
EDWARDS, CA

DRAWING TITLE

PLUMBING SITE PLAN

PROJECT TITLE

FACILITIES SUPPORT CENTER BUILDING
100% FINAL DESIGN SUBMITTAL

APPROVALS		DATE
Chief, Facilities Engineering & Asset Mgmt. Office **DAN CROWLEY**	David Crowley	4/14/11
Project Requestor /Customer **DAN CROWLEY**	David Crowley	4/14/11
Facilities Project Manager **GEMMA FLORES**	Gemma Flores	4/14/11
Chief, Office of Protective Services **JOHN ZELLMER**	[illegible]	4/14/11
Chief - Safety, Health, and Environmental Office **DAN MULLEN**	Dan Mullen	4/14/11
DFRC Chief Information Officer **KEN NORLIN**	[illegible]	4/19/11

DATE STRTD	11/08/10	DATE PRNTD	03/14/11
DRAWN BY		EDM-1703	
SCALE	AS NOTED	TRADE SH. No.	P1.0
FILE NAME		SHEET No. 140 of 193	