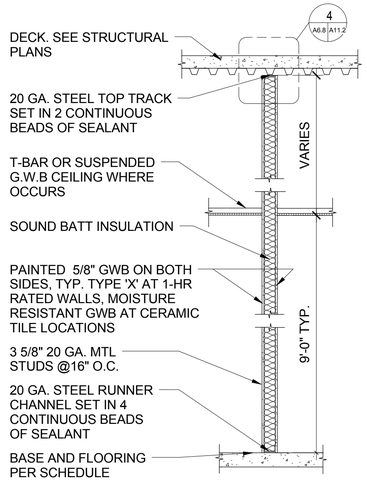

WALL TYPE 'A1' NOT RATED
WALL TYPE 'A3' 1-HR RATED
WALL TYPE 'A4' NOT RATED
(GWB ONE SIDE ONLY)

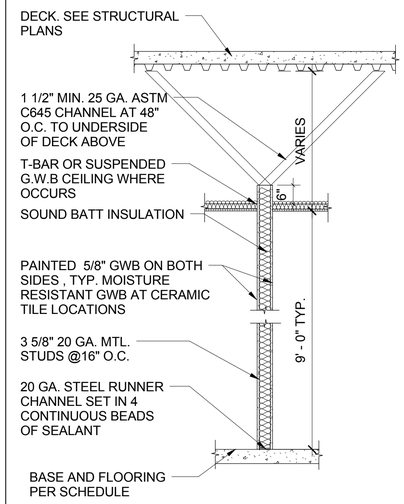

WALL TYPE 'A2'
WALL TYPE 'A5' (W/ 6" MTL. STUD)

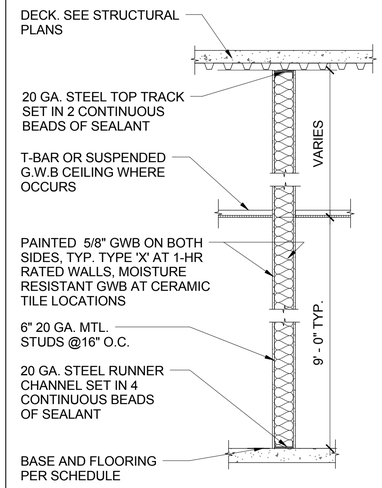

WALL TYPE 'B1' NOT RATED
WALL TYPE 'B2' 1-HR RATED

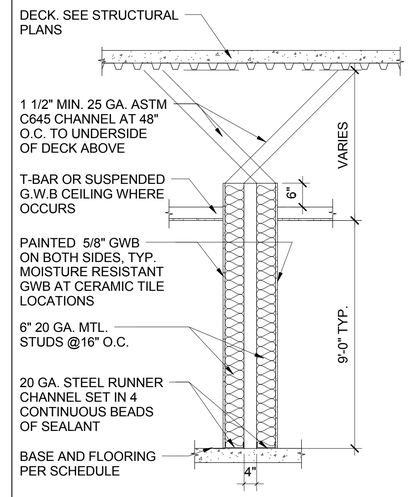

WALL TYPE 'B3' (PLUMBING WALL)

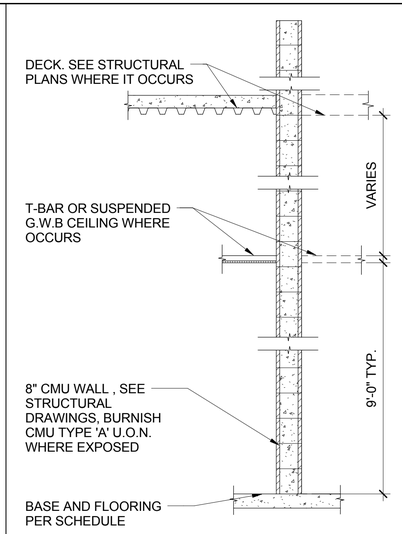

WALL TYPE 'C1'

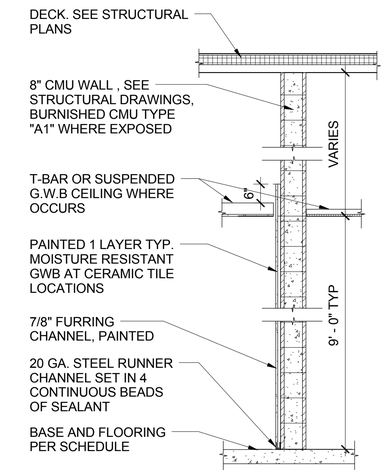

WALL TYPE 'C2'

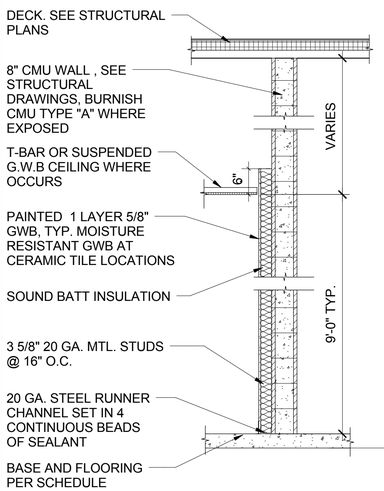

WALL TYPE 'C3'
WALL TYPE 'C7' (W/ 6" MTL STUDS)

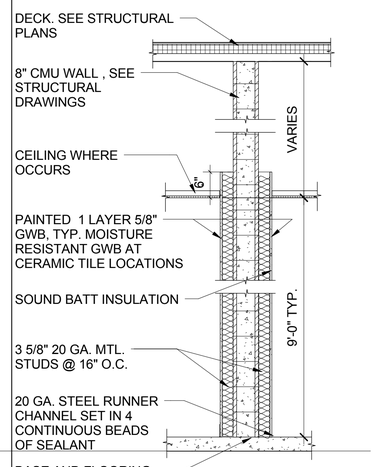

WALL TYPE 'C4'

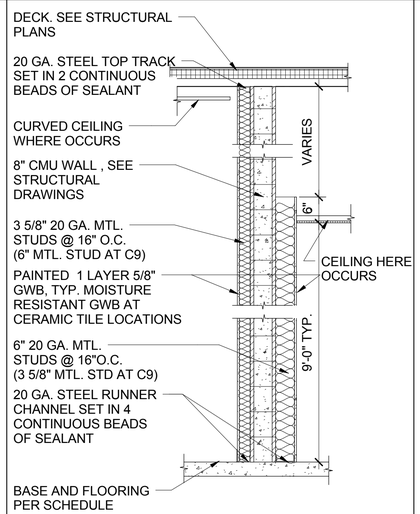

WALL TYPE 'C5'
WALL TYPE 'C9' 1-HR RATED

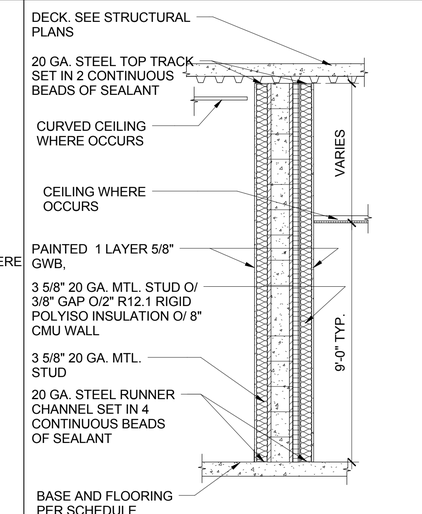

WALL TYPE 'C6'

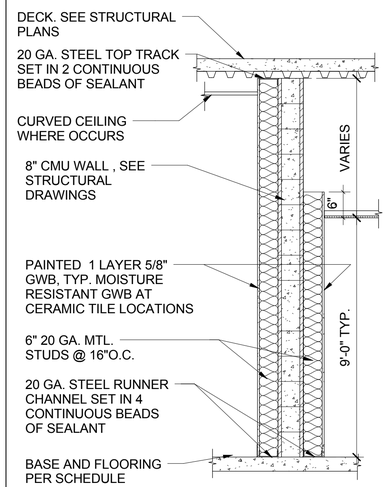

WALL TYPE 'C8'

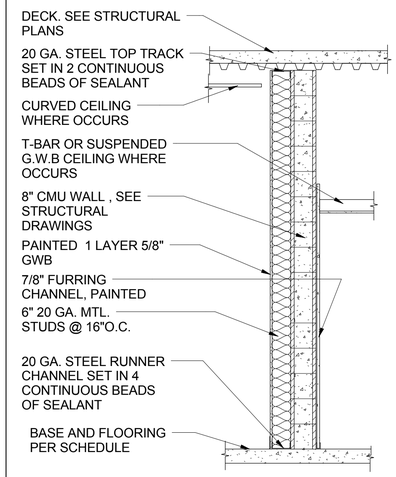

WALL TYPE 'C10' 1-HR RATED

DEVELOPMENT ONE, INC.
1611 East Fourth Street, Suite 250
Santa Ana, California 92701
J. Bruce Camino, Architect, AIA, NCARB
(714) 689-0298
(714) 648-0197 FAX

REGISTERED ARCHITECT
JOHN BRUCE CAMINO
C23740
Signature
10/31/11
RenewalDate
STATE OF CALIFORNIA

DATE	SYM	REVISION	BY	A'PD

NATIONAL AERONAUTICS AND SPACE ADMINISTRATION
DRYDEN FLIGHT RESEARCH CENTER
EDWARDS, CA

DRAWING TITLE
WALL TYPES

PROJECT TITLE
FACILITIES SUPPORT CENTER BUILDING
100% FINAL DESIGN SUBMITTAL

APPROVALS		DATE
Chief, Facilities Engineering & Asset Mgmt. Office DAN CROWLEY	David Crowley	4/14/11
Project Requestor /Customer DAN CROWLEY	David Crowley	4/14/11
Facilities Project Manager GEMMA FLORES	Gemma Flores	4/14/11
Chief, Office of Protective Services JOHN ZELLMER	[illegible]	4/14/11
Chief - Safety, Health, and Environmental Office DAN MULLEN	Dan Mullen	4/14/11
DFRC Chief Information Officer KEN NORLIN	[illegible]	4/14/11

DATE STRTD	11/16/10	DATE PRNTD	03/14/11
DRAWN BY		EDM-1703	
SCALE	AS NOTED	TRADE SH. No.	A6.8
FILE NAME		SHEET No. 61 of 193	

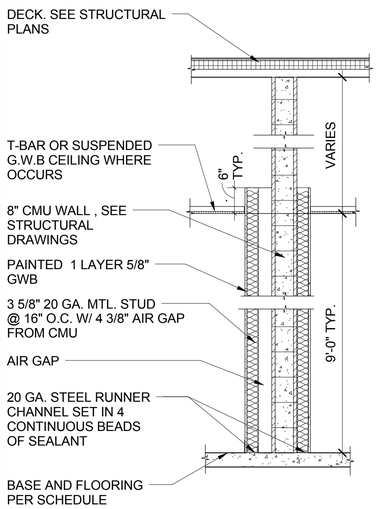

WALL TYPE 'C11'

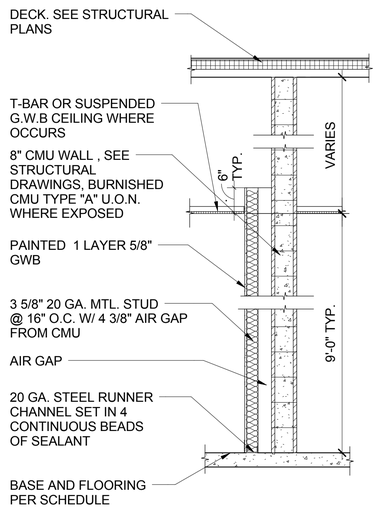

WALL TYPE 'C12'

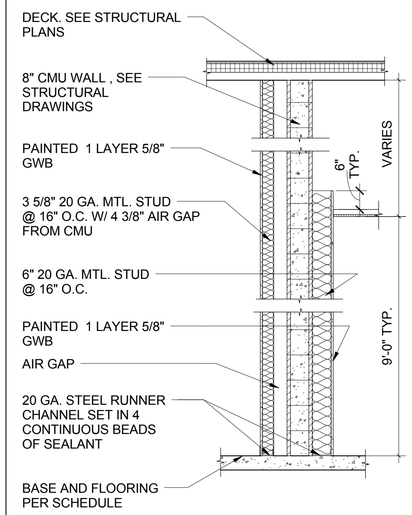

WALL TYPE 'C13'

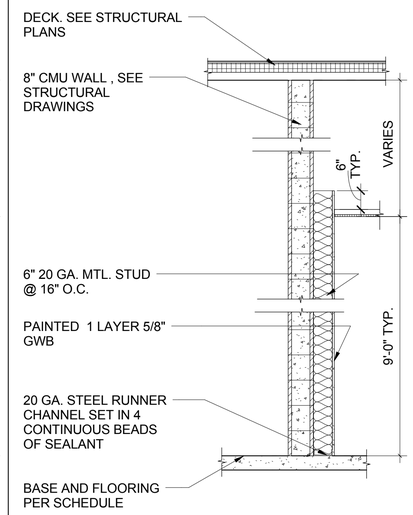

WALL TYPE 'C14'

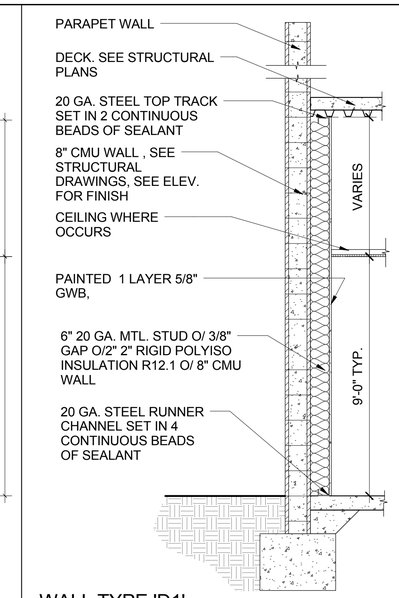

WALL TYPE 'D1'
WALL TYPE 'D2' (8" MTL. STUD AT D2)

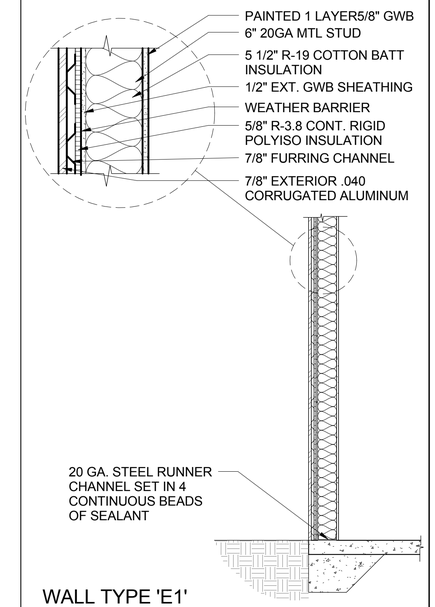

WALL TYPE 'E1'

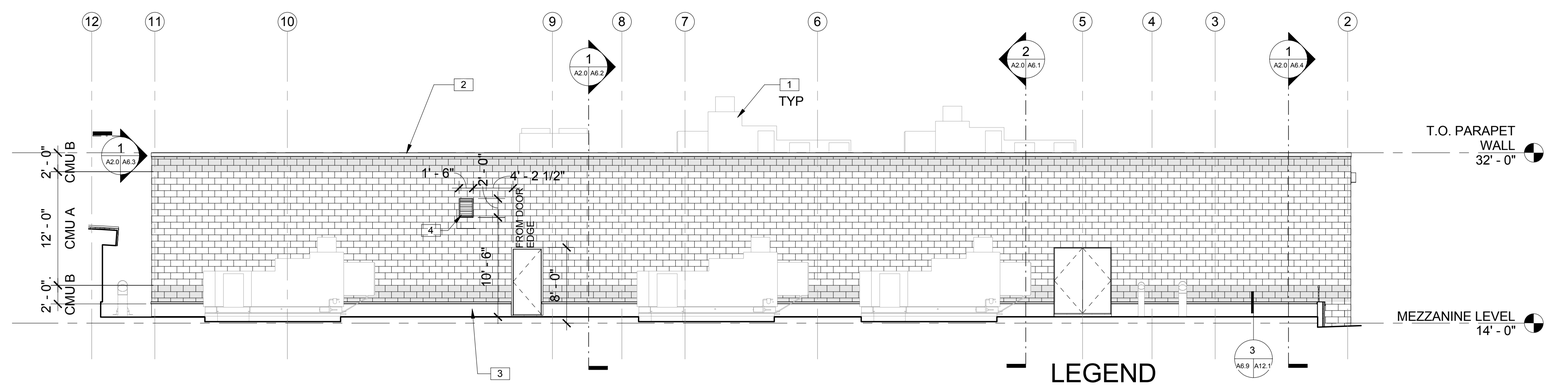

LEGEND

SEE FINISH SCHEDULE ON SHEET A7.3

CMU "B"

CMU "A"

KEYNOTES:

1 SEE MECHANICAL DRAWINGS FOR EQUIPMENT LAYOUT AND INFORMATION
2 METAL COPING AT PARAPET, SEE DETAIL 8/A12.0
3 TPO ROOF MEMBRANE WRAP UP CMU WALL
4 LOUVER, SEE MECHANICAL PLANS

PARTIAL BUILDING ELEVATION

SCALE: 1/8" = 1'-0" (1 / A2.5 A6.9)

DEVELOPMENT ONE, INC.
1611 East Fourth Street, Suite 250
Santa Ana, California 92701
J. Bruce Camino, Architect, AIA, NCARB
(714) 689-0298
(714) 648-0197 FAX

DATE	SYM	REVISION	BY	A'PD

NATIONAL AERONAUTICS AND SPACE ADMINISTRATION

DRYDEN FLIGHT RESEARCH CENTER
EDWARDS, CA

DRAWING TITLE

WALL TYPES

PROJECT TITLE

FACILITIES SUPPORT CENTER BUILDING
100% FINAL DESIGN SUBMITTAL

APPROVALS	DATE
Chief, Facilities Engineering & Asset Mgmt. Office DAN CROWLEY	4/14/11
Project Requestor /Customer DAN CROWLEY	4/14/11
Facilities Project Manager GEMMA FLORES	4/14/11
Chief, Office of Protective Services JOHN ZELLMER	4/14/11
Chief - Safety, Health, and Environmental Office DAN MULLEN	4/14/11
DFRC Chief Information Officer KEN NORLIN	4/14/11

DATE STRTD	11/17/10	DATE PRNTD	03/14/11
DRAWN BY		EDM-1703	
SCALE	AS NOTED	TRADE SH. No. A6.9	
FILE NAME		SHEET No. 62 of 193	

FIRST FLOOR DOOR SCHEDULE

NUMBER	TYPE	SIZE: WIDTH(W)	SIZE: HEIGHT(H)	SIZE: THICKNESS	HARDWARE	FIRE RATING	DOOR: MATERIAL	DOOR: FINISH	FRAME: MATERIAL	FRAME: FINISH	DETAILS: JAMB	DETAILS: HEAD	DETAILS: THRESHOLD	REMARKS
100A	F	5' - 11"	8' - 0"	0' - 2"	10		AL / GL	CLR AD	ALUM	CLR AD	6/A10.0	12A/A10.0	12B/A10.0	STOREFRONT DOOR
100B	F	6' - 0 1/2"	8' - 0"	0' - 2"	10		AL / GL	CLR AD	ALUM	CLR AD	6/A10.0	12A/A10.0	12B/A10.0	STOREFRONT DOOR
100C	F	6' - 0"	8' - 0"	0' - 2"	10		AL / GL	CLR AD	ALUM	CLR AD	6/A10.0	12A/A10.0	12B/A10.0	STOREFRONT DOOR
100D	F	6' - 0"	8' - 0"	0' - 2"	10		AL / GL	CLR AD	ALUM	CLR AD	6/A10.0	12A/A10.0	12B/A10.0	STOREFRONT DOOR
101A	A	3' - 0" / 6' - 0"	7' - 0"	0' - 2"	4		FWD	STAIN	ALUM	CLR AD	11A/A10.0	11B/A10.0	9A/A10.0	
101B	D	5' - 8"	7' - 0"	0' - 2"	5		FWD / GL	STAIN	ALUM	CLR AD	11A/A10.0	11B/A10.0	9A/A10.0	
103	L	3' - 0"	7' - 0"	0' - 2"	11		AL/ GL	PT	ALUM	PT	2/A10.0	1/A10.00	3/A10.0	
104	F	6' - 0"	7' - 0"	0' - 2"	10		AL / GL	CLR AD	ALUM	CLR AD	2/A10.0	1/A10.1	3/A10.0	
105	J	3' - 0"	7' - 0"	0' - 2"	9	20 MIN	FWD / GL	STAIN	HM	PT	8/A10.0	7/A10.0	9B/A10.0	
106A	A	3' - 0"	7' - 0"	0' - 2"	8		FWD	STAIN	HM	PT	8/A10.0	7/A10.0	10/A10.0	
106B	A	3' - 0"	7' - 0"	0' - 2"	8		FWD	STAIN	HM	PT	8/A10.0	7/A10.0	9B/A10.0	
107	A	3' - 0"	7' - 0"	0' - 2"	8		FWD	STAIN	HM	PT	8/A10.0	7/A10.0	10/A10.0	
108A	A	3' - 0"	7' - 0"	0' - 2"	8		FWD	STAIN	HM	PT	8/A10.0	7/A10.0	10/A10.0	
108B	A	3' - 0"	7' - 0"	0' - 2"	8		FWD	STAIN	HM	PT	8/A10.0	7/A10.0	9B/A10.0	
109	A	3' - 0"	7' - 0"	0' - 2"	8		FWD	STAIN	HM	PT	8/A10.0	7/A10.0	10/A10.0	
110	C	3' - 0"	7' - 0"	0' - 2"	1		WD / GL	STAIN	ALUM	CLR AD	5/A10.0	4/A10.0	9A/A10.0	
111	K	6' - 0"	7' - 0"	0' - 2"	12		FHM	PT	HM	PT	5/A10.0	5/A10.1	3/A10.0	LEVEL III GRADE
112	A	3' - 0"	7' - 0"	0' - 2"	3		FWD	STAIN	ALUM	CLR AD	8/A10.0	7/A10.0	9A/A10.0	
113	A	3' - 0"	7' - 0"	0' - 2"	1		FWD	STAIN	ALUM	CLR AD	8/A10.0	7/A10.0	9A/A10.0	
114	H	3' - 0"	7' - 0"	0' - 2"	3		FHM	PT	HM	PT	8/A10.0	7/A10.0	9B/A10.0	
115	A	3' - 0"	7' - 0"	0' - 2"	1		FWD	STAIN	ALUM	CLR AD	8/A10.0	7/A10.0	9A/A10.0	
116	K	3' - 0" / 6' - 0"	7' - 0"	0' - 2"	12		FHM	PT	HM	PT	5/A10.0	5/A10.1	3/A10.0	LEVEL III GRADE
117	J	3' - 0"	7' - 0"	0' - 2"	6	20 MIN	FHM/ GL	PT	HM	CLR AD	8/A10.0	7/A10.1	9B/A10.0	LEVEL II GRADE
120A	L	3' - 0"	7' - 0"	0' - 2"	11		FHM/ GL	PT	HM	PT	2/A10.0	1/A10.0	3/A10.0	
120B	D	5' - 8"	7' - 0"	0' - 2"	5		FWD / GL	STAIN	ALUM	CLR AD	11A/A10.0	11B/A10.0	9A/A10.0	
121	C	3' - 0"	7' - 0"	0' - 2"	4		WD / GL	STAIN	ALUM	CLR AD	11A/A10.0	11B/A10.0	9A/A10.0	
122	C	3' - 0"	7' - 0"	0' - 2"	2		WD / GL	STAIN	ALUM	CLR AD	11A/A10.0	11B/A10.0	9B/A10.0	
123	C	3' - 0"	7' - 0"	0' - 2"	2		WD / GL	STAIN	ALUM	CLR AD	11A/A10.0	11B/A10.0	9B/A10.0	
124	C	3' - 0"	7' - 0"	0' - 2"	2		WD / GL	STAIN	ALUM	CLR AD	11A/A10.0	11B/A10.0	9B/A10.0	
125	C	3' - 0"	7' - 0"	0' - 2"	2		WD / GL	STAIN	ALUM	CLR AD	11A/A10.0	11B/A10.0	9B/A10.0	
126	C	3' - 0"	7' - 0"	0' - 2"	2		WD / GL	STAIN	ALUM	CLR AD	11A/A10.0	11B/A10.0	9B/A10.0	
127	C	3' - 0" / 6' - 0"	7' - 0"	0' - 2"	2		WD / GL	STAIN	ALUM	CLR AD	11A/A10.0	11B/A10.0	9B/A10.0	
128	C	3' - 0"	7' - 0"	0' - 2"	2		WD / GL	STAIN	ALUM	CLR AD	11A/A10.0	11B/A10.0	9A/A10.0	
130A	L	3' - 0"	7' - 0"	0' - 2"	11		FHM/ GL	PT	HM	PT	2/A10.0	1/A10.0	3/A10.0	
130B	D	5' - 8"	7' - 0"	0' - 2"	5		FWD / GL	STAIN	ALUM	CLR AD	11A/A10.0	11B/A10.0	9A/A10.0	
131	C	3' - 0"	7' - 0"	0' - 2"	4		WD / GL	STAIN	ALUM	CLR AD	11A/A10.0	11B/A10.0	9A/A10.0	
131A	H	3' - 0"	7' - 0"	0' - 2"	3		FHM	PT	HM	PT	8/A10.00	7/A10.0	9B/A10.0	
132	C	3' - 0"	7' - 0"	0' - 2"	2		WD / GL	STAIN	ALUM	CLR AD	11A/A10.0	11B/A10.0	9B/A10.0	
133	C	3' - 0"	7' - 0"	0' - 2"	2		WD / GL	STAIN	ALUM	CLR AD	11A/A10.0	11B/A10.0	9B/A10.0	
134	C	3' - 0"	7' - 0"	0' - 2"	2		WD / GL	STAIN	ALUM	CLR AD	11A/A10.0	11B/A10.0	9B/A10.0	
135	C	3' - 0"	7' - 0"	0' - 2"	2		WD / GL	STAIN	ALUM	CLR AD	11A/A10.0	11B/A10.0	9B/A10.0	
136	C	3' - 0"	7' - 0"	0' - 2"	2		WD / GL	STAIN	ALUM	CLR AD	11A/A10.0	11B/A10.0	9B/A10.0	
137	C	3' - 0"	7' - 0"	0' - 2"	2		WD / GL	STAIN	ALUM	CLR AD	11A/A10.0	11B/A10.0	9A/A10.0	
140A	L	3' - 0"	7' - 0"	0' - 2"	11		FHM/ GL	PT	HM	PT	2/A10.0	1/A10.00	3/A10.0	
140B	D	5' - 8"	7' - 0"	0' - 2"	5		FWD / GL	STAIN	ALUM	CLR AD	11A/A10.0	11B/A10.0	9A/A10.0	
141	C	3' - 0"	7' - 0"	0' - 2"	4		WD / GL	STAIN	ALUM	CLR AD	11A/A10.0	11B/A10.0	9A/A10.0	
142	C	3' - 0"	7' - 0"	0' - 2"	2		WD / GL	STAIN	ALUM	CLR AD	11A/A10.0	11B/A10.0	9B/A10.0	
143	C	3' - 0"	7' - 0"	0' - 2"	2		WD / GL	STAIN	ALUM	CLR AD	11A/A10.0	11B/A10.0	9B/A10.0	
144	C	3' - 0" / 6' - 0"	7' - 0"	0' - 2"	2		WD / GL	STAIN	ALUM	CLR AD	11A/A10.0	11B/A10.0	9B/A10.0	
145	C	3' - 0"	7' - 0"	0' - 2"	2		WD / GL	STAIN	ALUM	CLR AD	11A/A10.0	11B/A10.0	9B/A10.0	
146	C	3' - 0"	7' - 0"	0' - 2"	2		WD / GL	STAIN	ALUM	CLR AD	11A/A10.0	11B/A10.0	9A/A10.0	
150	B	5' - 8"	7' - 0"	0' - 2"	5		FWD / GL	STAIN	ALUM	CLR AD	11A/A10.0	11B/A10.0	9A/A10.0	
160A	C	3' - 0"	7' - 0"	0' - 2"	6		WD / GL	STAIN	ALUM	CLR AD	11A/A10.0	11B/A10.0	9A/A10.0	
160B	J	3' - 0"	7' - 0"	0' - 2"	9	20 MIN	FWD / GL	STAIN	ALUM	CLR AD	11A/A10.0	11B/A10.0	9A/A10.0	
161A	K	6' - 0"	7' - 0"	0' - 2"	12		FHM	PT	HM	PT	5/A10.0	5/A10.1	3/A10.0	LEVEL III GRADE
161B	G	8' - 0"	8' - 0"	0' - 2"	-	20 MIN	STL	PC	STL	PT	2/A10.1	1/A10.1		ROLL-UP DOOR
161C	J	3' - 0"	7' - 0"	0' - 2"	6	20 MIN	FHM/ GL	PT	HM	CLR AD	8/A10.0	7/A10.1	9B/A10.0	LEVEL II GRADE
162	C	3' - 0"	7' - 0"	0' - 2"	2		WD / GL	STAIN	ALUM	CLR AD	11A/A10.0	11B/A10.0	9B/A10.0	
164	C	3' - 0"	7' - 0"	0' - 2"	2		WD / GL	STAIN	ALUM	CLR AD	11A/A10.0	11B/A10.0	9B/A10.0	
165	C	3' - 0"	7' - 0"	0' - 2"	2		WD / GL	STAIN	ALUM	CLR AD	11A/A10.0	11B/A10.0	9B/A10.0	
167	C	3' - 0"	7' - 0"	0' - 2"	2		WD / GL	STAIN	ALUM	CLR AD	11A/A10.0	11B/A10.0	9B/A10.0	
168A	C	3' - 0"	7' - 0"	0' - 2"	1		WD / GL	STAIN	ALUM	CLR AD	5/A10.0	4/A10.0	9A/A10.0	
168B	C	3' - 0"	7' - 0"	0' - 2"	4		WD / GL	PT	ALUM	CLR AD	11A/A10.0	11B/A10.0	9B/A10.0	
169	E	6' - 0"	7' - 0"	0' - 2"	7		FHM	PT	HM	PT	8/A10.0	7/A10.0	9B/A10.0	LEVEL II GRADE
170B	E	6' - 0"	7' - 0"	0' - 2"	7		FHM	PT	HM	PT	8/A10.0	7/A10.0	9B/A10.0	LEVEL II GRADE
170C	J	3' - 0"	7' - 0"	0' - 2"	1		FHM/ GL	PT	HM	PT	8/A10.0	7/A10.0	9B/A10.0	LEVEL II GRADE
171A	J	3' - 0"	7' - 0"	0' - 2"	1	20 MIN	FHM/ GL	PT	HM	PT	8/A10.0	7/A10.0	9B/A10.0	
171B	H	3' - 0"	7' - 0"	0' - 2"	1		FHM	PT	HM	PT	8/A10.0	7/A10.0	9B/A10.0	
172	J	3' - 0"	7' - 0"	0' - 2"	9	20 MIN	FHM/ GL	PT	HM	PT	8/A10.0	7/A10.0	9B/A10.0	LEVEL II GRADE
175A	J	3' - 0"	7' - 0"	0' - 2"	13		FHM/ GL	PT	HM	PT	2/A10.0	1/A10.0	3/A10.0	LEVEL III GRADE
175B	G	12' - 0"	14' - 0"	0' - 2"	-		STL	PC	STL	PT	2/A10.1	1/A10.1		ROLL-UP DOOR
177A	J	3' - 0"	7' - 0"	0' - 2"	3	20 MIN	FHM/ GL	PT	HM	PT	8/A10.0	7/A10.0	9A/A10.0	LEVEL II GRADE
178A	J	3' - 0"	7' - 0"	0' - 2"	9	20 MIN	FHM	PT	HM	PT	8/A10.0	7/A10.0	9B/A10.0	LEVEL II GRADE
178B	J	3' - 0"	7' - 0"	0' - 2"	11		FHM	PT	HM	PT	5/A10.0	4/A10.0	3/A10.0	LEVEL III GRADE

DOOR SCHEDULE ABBREVIATIONS:

ALUM	ALUMINUM	FWD	FLUSH WOOD DOOR	HM	HOLLOW METAL	PT	PAINT
CLR AD	CLEAR ANODIZED	GL	GLASS	STL	STEEL	WD	WOOD
FHM	FLUSH HOLLOW METAL	GALV	GALVANIZED			PC	POWDER COAT

MEZZANINE FLOOR DOOR SCHEDULE

NUMBER	TYPE	SIZE: WIDTH(W)	SIZE: HEIGHT(H)	SIZE: THICKNESS	HARDWARE	FIRE RATING	DOOR: MATERIAL	DOOR: FINISH	FRAME: MATERIAL	FRAME: FINISH	DEATAILS: JAMB	DEATAILS: HEAD	DEATAILS: THRESHOLD	REMARKS
200A	K	6' - 0"	7' - 0"	0' - 2"	15		FHM	PT	HM	PT	5/A10.0	4/A10.0	6/A10.1	LEVEL III GRADE
200C	J	3' - 0"	7' - 0"	0' - 2"	14	20 MIN	FHM/ GL	PT	HM	PT	8/10.0	7/A10.0	9B/A10.0	LEVEL II GRADE
200D	J	3' - 0"	7' - 0"	0' - 2"	16		FHM	PT	HM	PT	5/10.0	4/A10.0	6/A10.1	LEVEL III GRADE
201	J	3' - 0"	7' - 0"	0' - 2"	17	20 MIN	FHM/ GL	PT	HM	PT	8/A10.0	7/A10.0	10/A10.0 (SIM)	LEVEL II GRADE
205A	J	3' - 0"	7' - 0"	0' - 2"	17	20 MIN	FHM/ GL	PT	HM	PT	8/10.0	7/A10.0	10/A10.0 (SIM)	LEVEL II GRADE
205B	J	3' - 0"	7' - 0"	0' - 2"	17	20 MIN	FHM/ GL	PT	HM	PT	8/10.0	7/A10.0	10/A10.0 (SIM)	LEVEL II GRADE

DOOR TYPES:

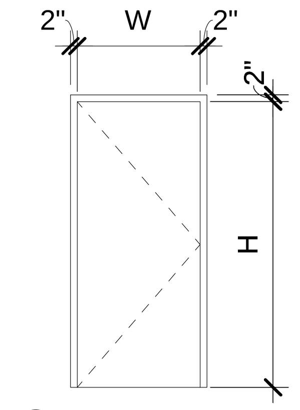

(A) FLUSH WOOD DOOR

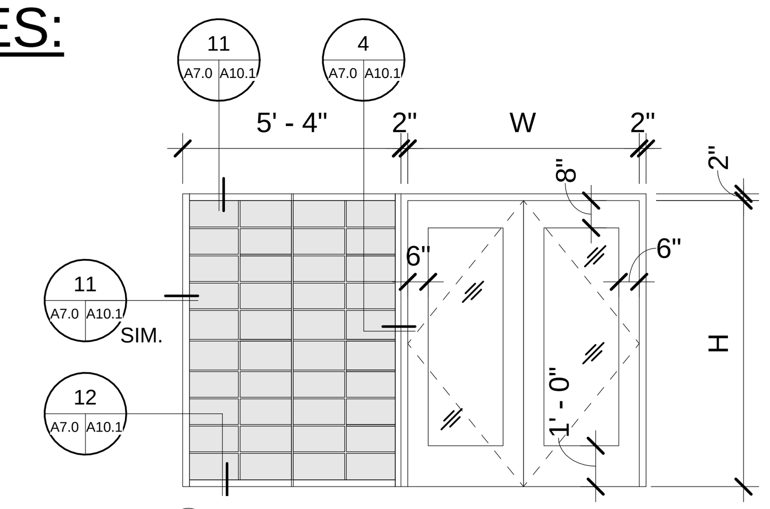

(B) FLUSH WOOD DOUBLE DOOR WITH TEMPERED GLASS LITE AND INSULATED TRANSLUCENT WALL PANEL SIDELIGHT

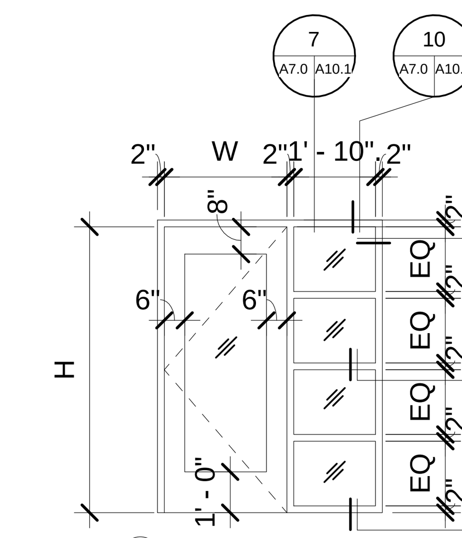

(C) WOOD DOOR WITH TEMPERED GLASS LITE AND SIDELIGHT

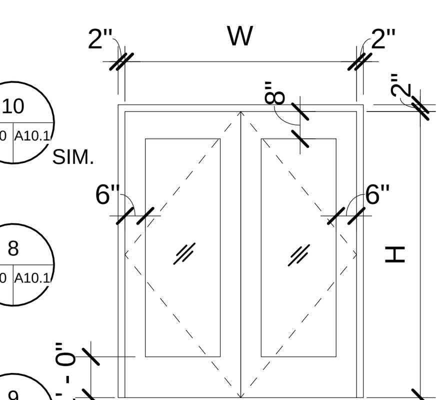

(D) FLUSH WOOD DOUBLE DOOR WITH TEMPERED GLASS LITES

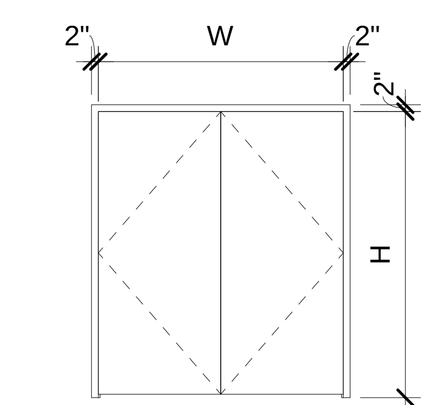

(E) FLUSH HOLLOW METAL DOUBLE DOOR

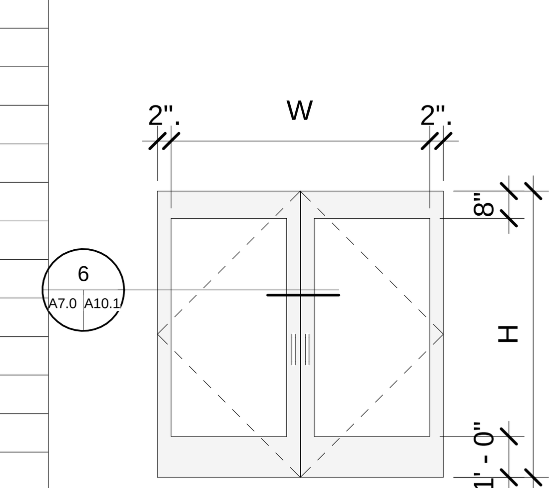

(F) ALUMINUM STOREFRONT DOUBLE DOOR WITH TEMPERED GLASS LITES

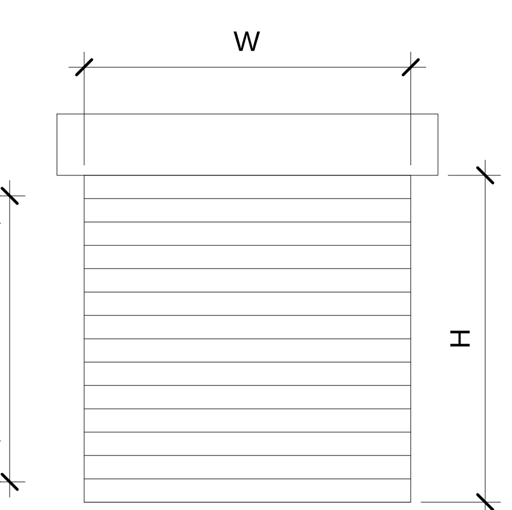

(G) OVERHEAD ROLL-UP DOOR

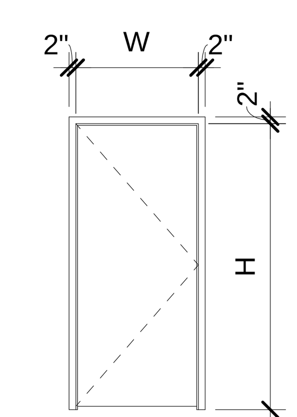

(H) FLUSH HOLLOW METAL DOOR

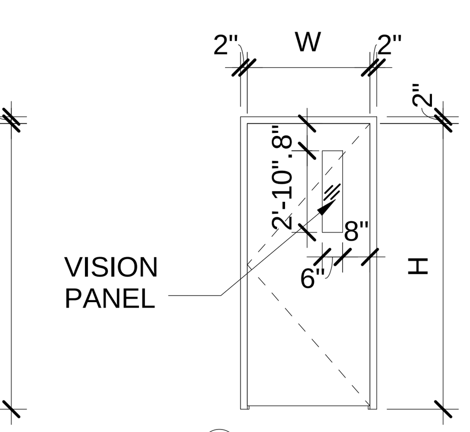

(J) FLUSH HOLLOW METAL DOOR WITH TEMPERED GLASS VISION PANEL

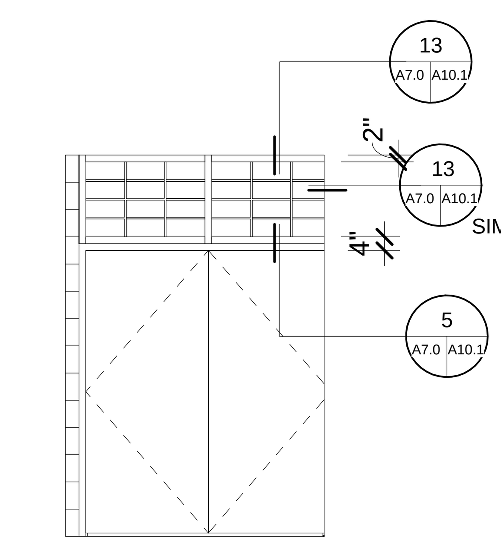

(K) FLUSH HOLLOW METAL DOUBLE DOOR WITH INSULATED TRANSLUCENT WALL PANEL TRANSOM

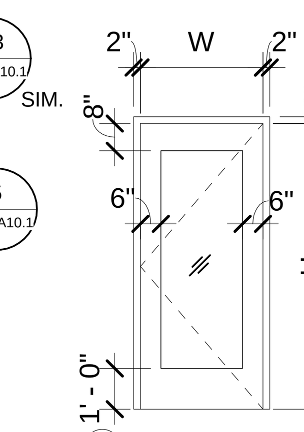

(L) ALUMINUM DOOR WITH TEMPERED GLASS LITE

DOOR HARDWARE SETS:

HARDWARE SET 1
3 EA BUTT HINGE
1 EA CLASSROOM LOCKSET
1 EA BUMPER

HARDWARE SET 2
3 EA BUTT HINGE
1 EA CLASSROOM LOCKSET
1 SET PERIMETER GASKET "PEMKO S-88" O.A.E.
1 EA BUMPER

HARDWARE SET 3
3 EA BUTT HINGE
1 EA STORE ROOM LOCKSET
1 EA BUMPER

HARDWARE SET 4
3 EA BUTT HINGE
1 EA PASSAGE LATCHSET
1 SET PERIMETER GASKET "PEMKO S-88" O.A.E.
1 EA CLOSER
1 EA HOLD OPEN
1 EA BUMPER

HARDWARE SET 5
6 EA BUTT HINGE
2 EA PASSAGE LATCHSET
1 SET PERIMETER GASKET "PEMKO S-88" O.A.E.
2 EA CLOSER
2 EA HOLD OPEN
2 EA BUMPER

HARDWARE SET 6
3 EA BUTT HINGE
1 EA CLASSROOM LOCKSET
1 EA CLOSER
1 EA HOLD OPEN
1 EA BUMPER

HARDWARE SET 7
6 EA BUTT HINGE
1 EA CLASSROOM LOCKSET
1 EA DUMMY TRIM LATCHSET
2 EA BUMPER

HARDWARE SET 8
3 EA BUTT HINGE
1 EA PUSH PLATE
1 EA FIXED PULL
1 EA CLOSER
1 EA BUMPER

HARDWARE SET 9
3 EA BUTT HINGE
1 EA CLASSROOM LOCKSET
1 EA PUSH PAD EXIT DEVICE W/ CONCEALED VERTICAL ROD AND AUTOMATIC FLUSH BOLTS
1 EA CLOSER
1 EA BUMPER

HARDWARE SET 10
6 EA BUTT HINGE
2 EA ENTRY LOCKSET
2 EA PUSH PAD EXIT DEVICE W/ CONCEALED VERTICAL ROD AND AUTOMATIC FLUSH BOLTS
2 EA CLOSER
2 EA BUMPER
1 EA THRESHOLD

HARDWARE SET 11
3 EA BUTT HINGE
1 EA ENTRY LOCKSET
1 EA PUSH PAD EXIT DEVICE W/ CONCEALED VERTICAL ROD AND AUTOMATIC FLUSH BOLTS
1 EA CLOSER
1 EA BUMPER
1 EA THRESHOLD

HARDWARE SET 12
6 EA BUTT HINGE
1 EA STORE ROOM LOCKSET
1 EA DUMMY TRIM LATCHSET
2 EA BUMPER
1 EA THRESHOLD

HARDWARE SET 13
3 EA BUTT HINGE
1 EA STORE ROOM LOCKSET
1 EA BUMPER
1 EA THRESHOLD

HARDWARE SET 14
3 EA BUTT HINGE
1 EA PASSAGE LATCHSET
1 EA CLOSER
1 EA BUMPER

HARDWARE SET 15
6 EA BUTT HINGE
2 EA STOREDOOR LOCKSET
1 EA THRESHOLD

HARDWARE SET 16
3 EA BUTT HINGE
1 EA STOREDOOR LOCKSET
1 EA THRESHOLD

HARDWARE SET 17
3 EA BUTT HINGE
1 EA STOREROOM LOCKSET
1 EA CLOSER
1 EA BUMPER

LICENSED ARCHITECT
JOHN BRUCE CAMINO
C23740
Signature
10/31/11
RenewalDate
STATE OF CALIFORNIA

DEVELOPMENT ONE, INC.
1611 East Fourth Street, Suite 250
Santa Ana, California 92701
J. Bruce Camino, Architect, AIA, NCARB
(714) 689-0298
(714) 648-0197 FAX

DATE	SYM	REVISION	BY	A'PD

NATIONAL AERONAUTICS AND SPACE ADMINISTRATION
DRYDEN FLIGHT RESEARCH CENTER
EDWARDS, CA

DRAWING TITLE
DOOR SCHEDULE

PROJECT TITLE
FACILITIES SUPPORT CENTER BUILDING
100% FINAL DESIGN SUBMITTAL

APPROVALS	DATE
Chief, Facilities Engineering & Asset Mgmt. Office DAN CROWLEY	4/14/11
Project Requestor /Customer DAN CROWLEY	4/14/11
Facilities Project Manager GEMMA FLORES	4/14/11
Chief, Office of Protective Services JOHN ZELLMER	4/14/11
Chief - Safety, Health, and Environmental Office DAN MULLEN	4/14/11
DFRC Chief Information Officer KEN NORLIN	4/14/11

DATE STRTD	11/10/10	DATE PRNTD	03/14/11
DRAWN BY		EDM-1703	
SCALE	AS NOTED	TRADE SH. No.	
FILE NAME		A7.0	SHEET No. 63 of 193

FIRST AND FLAT ROOF LEVEL WINDOW SCHEDULE

NUMBER	TYPE	ROUGH OPENING WIDTH	ROUGH OPENING HEIGHT	THICKNESS	FRAME	HEAD	JAMB	SILL	REMARKS
1	C	9' - 2"	13' - 8"	4"	AL	7/A10.2	8/A10.2	9/A10.2	
2	C	9' - 2"	13' - 8"	4"	AL	7/A10.2	8/A10.2	9/A10.2	
3	C	9' - 2"	13' - 8"	4"	AL	7/A10.2	8/A10.2	9/A10.2	
4	A	4' - 5 1/2"	13' - 8"	4"	AL	7/A10.2	8/A10.2	9/A10.2	
5	B	4' - 0"	9' - 4"	4"	AL	1/A10.2	2/A10.2	3/A10.2	
6	B	4' - 0"	9' - 4"	4"	AL	1/A10.2	2/A10.2	3/A10.2	
7	C	9' - 2"	13' - 8"	4"	AL	7/A10.2	8/A10.2	9/A10.2	
8	C	9' - 2"	13' - 8"	4"	AL	7/A10.2	8/A10.2	9/A10.2	
9	C	9' - 2"	13' - 8"	4"	AL	7/A10.2	8/A10.2	9/A10.2	
10	A	4' - 5 1/2"	13' - 8"	4"	AL	7/A10.2	8/A10.2	9/A10.2	
11	B	4' - 0"	9' - 4"	4"	AL	1/A10.2	2/A10.2	3/A10.2	
12	B	4' - 0"	9' - 4"	4"	AL	1/A10.2	2/A10.2	3/A10.2	
13	C	9' - 2"	13' - 8"	4"	AL	7/A10.2	8/A10.2	9/A10.2	
14	C	9' - 2"	13' - 8"	4"	AL	7/A10.2	8/A10.2	9/A10.2	
15	C	9' - 2"	13' - 8"	4"	AL	7/A10.2	8/A10.2	9/A10.2	
16	A	4' - 6 .	13' - 8"	4"	AL	7/A10.2	8/A10.2	9/A10.2	
17	E	14' - 4" .	13' - 8"	4"	AL	4/A10.2	8/A10.2	9/A10.2	
18	E	14' - 4" .	13' - 8"	4"	AL	4/A10.2	8/A10.2	9/A10.2	
19	E	14' - 4" .	13' - 8"	4"	AL	4/A10.2	8/A10.2	9/A10.2	
20	E	14' - 4" .	13' - 8"	4"	AL	4/A10.2	8/A10.2	9/A10.2	
21	E	14' - 4" .	13' - 8"	4"	AL	4/A10.2	8/A10.2	9/A10.2	
22	E	14' - 4" .	13' - 8"	4"	AL	4/A10.2	8/A10.2	9/A10.2	
23	P	30' - 2" .	11' - 6"	4"	AL	11/A12.2	11/A12.2	9/A10.2	
24	P	30' - 2" .	11' - 6"	4"	AL	11/A12.2	11/A12.2	9/A10.2	
25	E	11' - 10" .	13' - 8"	4"	AL	4/A10.2	8/A10.2	9/A10.2	
26	E	14' - 2" .	13' - 8"	4"	AL	4/A10.2	8/A10.2	9/A10.2	
27	E	14' - 2" .	13' - 8"	4"	AL	4/A10.2	8/A10.2	9/A10.2	
28	C	8' - 9 1/2"	13' - 8"	4"	AL	7/A10.2	8/A10.2	9/A10.2	
29	C	8' - 4" .	13' - 8"	4"	AL	7/A10.2	8/A10.2	9/A10.2	
30	C	7' - 9" .	14' - 4"	4"	AL	7/A10.2	8/A10.2	9/A10.2	
31	C	7' - 9 1/2"	14' - 4"	4"	AL	7/A10.2	8/A10.2	9/A10.2	
32	C	7' - 9 1/2"	14' - 4"	4"	AL	7/A10.2	8/A10.2	9/A10.2	
36	B	4' - 0"	9' - 4"	4"	AL	1/A10.2	2/A10.2	3/A10.2	
37	B	4' - 0"	9' - 4"	4"	AL	1/A10.2	2/A10.2	3/A10.2	
38	B	4' - 0"	9' - 4"	4"	AL	1/A10.2	2/A10.2	3/A10.2	
39	B	4' - 0"	9' - 4"	4"	AL	1/A10.2	2/A10.2	3/A10.2	
40	B	4' - 0"	9' - 4"	4"	AL	1/A10.2	2/A10.2	3/A10.2	
41	B	4' - 0"	9' - 4"	4"	AL	1/A10.2	2/A10.2	3/A10.2	
42	B	4' - 0"	9' - 4"	4"	AL	1/A10.2	2/A10.2	3/A10.2	
43	B	4' - 0"	9' - 4"	4"	AL	1/A10.2	2/A10.2	3/A10.2	
44	C	8' - 5"	13' - 8"	4"	AL	7/A10.2	8/A10.2	9/A10.2	
45	C	8' - 5"	13' - 8"	4"	AL	7/A10.2	8/A10.2	9/A10.2	
46	C	8' - 5"	13' - 8"	4"	AL	7/A10.2	8/A10.2	9/A10.2	
47	B	4' - 0"	9' - 4"	4"	AL	1/A10.2	2/A10.2	3/A10.2	
48	B	4' - 0"	9' - 4"	4"	AL	1/A10.2	2/A10.2	3/A10.2	
49	B	4' - 0"	9' - 4"	4"	AL	1/A10.2	2/A10.2	3/A10.2	
50	B	4' - 0"	9' - 4"	4"	AL	1/A10.2	2/A10.2	3/A10.2	
51	B	4' - 0"	9' - 4"	4"	AL	1/A10.2	2/A10.2	3/A10.2	
52	B	4' - 0"	9' - 4"	4"	AL	1/A10.2	2/A10.2	3/A10.2	
53	B	4' - 0"	9' - 4"	4"	AL	1/A10.2	2/A10.2	3/A10.2	
54	G	9' - 0"	7' - 2"	2 3/4"	AL	11/A10.1	11/A10.1	12/A10.1	
55	G	9' - 0"	7' - 2"	2 3/4"	AL	11/A10.1	11/A10.1	12/A10.1	
56	G	9' - 0"	7' - 2"	2 3/4"	AL	11/A10.1	11/A10.1	12/A10.1	
66	Q	19' - 4"	7' - 4"	4"	AL	1/A10.2	2/A10.2	6/A10.2	
77	K	4' - 6" .	2' - 0"	2 3/4"	AL	7/A10.2	8/A10.2	8/A10.2	
78	L	9' - 2"	4' - 7"	2 3/4"	AL	7/A10.2	8/A10.2	8/A10.2	
79	M	9' - 2"	5' - 11"	2 3/4"	AL	7/A10.2	8/A10.2	8/A10.2	
80	N	9' - 2" .	6' - 1"	2 3/4"	AL	7/A10.2	8/A10.2	8/A10.2	
81	F	14' - 2 1/2"	5' - 6"	4"	AL	11/A10.2	4/A12.2	12/A10.2	
82	F	14' - 2 1/2"	5' - 6"	4"	AL	11/A10.2	4/A12.2	12/A10.2	
83	F	14' - 2 1/2"	5' - 6"	4"	AL	11/A10.2	4/A12.2	12/A10.2	
84	F	14' - 2 1/2"	5' - 6"	4"	AL	11/A10.2	4/A12.2	12/A10.2	
85	F	14' - 2 1/2"	5' - 6"	4"	AL	11/A10.2	4/A12.2	12/A10.2	
86	F	14' - 2 1/2"	5' - 6"	4"	AL	11/A10.2	4/A12.2	12/A10.2	
87	F	7' - 8"	5' - 6"	4"	AL	11/A10.2	4/A12.2	12/A10.2	
88	F	12' - 4"	5' - 6"	4"	AL	11/A10.2	4/A12.2	12/A10.2	
89	F	7' - 8"	5' - 6"	4"	AL	11/A10.2	4/A12.2	12/A10.2	
90	K	4' - 6"	2' - 0"	2 3/4"	AL	7/A10.2	8/A10.2	8/A10.2	
91	L	9' - 2"	4' - 7"	2 3/4"	AL	7/A10.2	8/A10.2	8/A10.2	
92	M	9' - 2"	5' - 11"	2 3/4"	AL	7/A10.2	8/A10.2	8/A10.2	
93	N	9' - 2" .	6' - 1"	2 3/4"	AL	7/A10.2	8/A10.2	8/A10.2	
94	F	14' - 2 1/2"	5' - 6"	4"	AL	11/A10.2	4/A12.2	12/A10.2	
95	F	14' - 2 1/2"	5' - 6"	4"	AL	11/A10.2	4/A12.2	12/A10.2	
96	F	14' - 2 1/2"	5' - 6"	4"	AL	11/A10.2	4/A12.2	12/A10.2	
97	F	14' - 2 1/2"	5' - 6"	4"	AL	11/A10.2	4/A12.2	12/A10.2	
98	F	14' - 2 1/2"	5' - 6"	4"	AL	11/A10.2	4/A12.2	12/A10.2	
99	F	7' - 10"	5' - 6"	4"	AL	11/A10.2	4/A12.2	12/A10.2	
100	K	4' - 6"	2' - 0"	2 3/4"	AL	7/A10.2	8/A10.2	8/A10.2	
101	L	9' - 2"	4' - 7"	2 3/4"	AL	7/A10.2	8/A10.2	8/A10.2	
102	M	9' - 2"	5' - 11"	2 3/4"	AL	7/A10.2	8/A10.2	8/A10.2	
103	N	9' - 2" .	6' - 1"	2 3/4"	AL	7/A10.2	8/A10.2	8/A10.2	

FIRST AND FLAT ROOF LEVEL WINDOW SCHEDULE

NUMBER	TYPE	ROUGH OPENING WIDTH	ROUGH OPENING HEIGHT	THICKNESS	FRAME	HEAD	JAMB	SILL	REMARKS
104	F	14' - 2 1/2"	5' - 6"	4"	AL	11/A10.2	4/A12.2	12/A10.2	
105	F	14' - 2 1/2"	5' - 6"	4"	AL	11/A10.2	4/A12.2	12/A10.2	
106	F	14' - 2 1/2"	5' - 6"	4"	AL	11/A10.2	4/A12.2	12/A10.2	
107	F	14' - 2 1/2"	5' - 6"	4"	AL	11/A10.2	4/A12.2	12/A10.2	
108	F	14' - 2 1/2"	5' - 6"	4"	AL	11/A10.2	4/A12.2	12/A10.2	

Grand total: 86

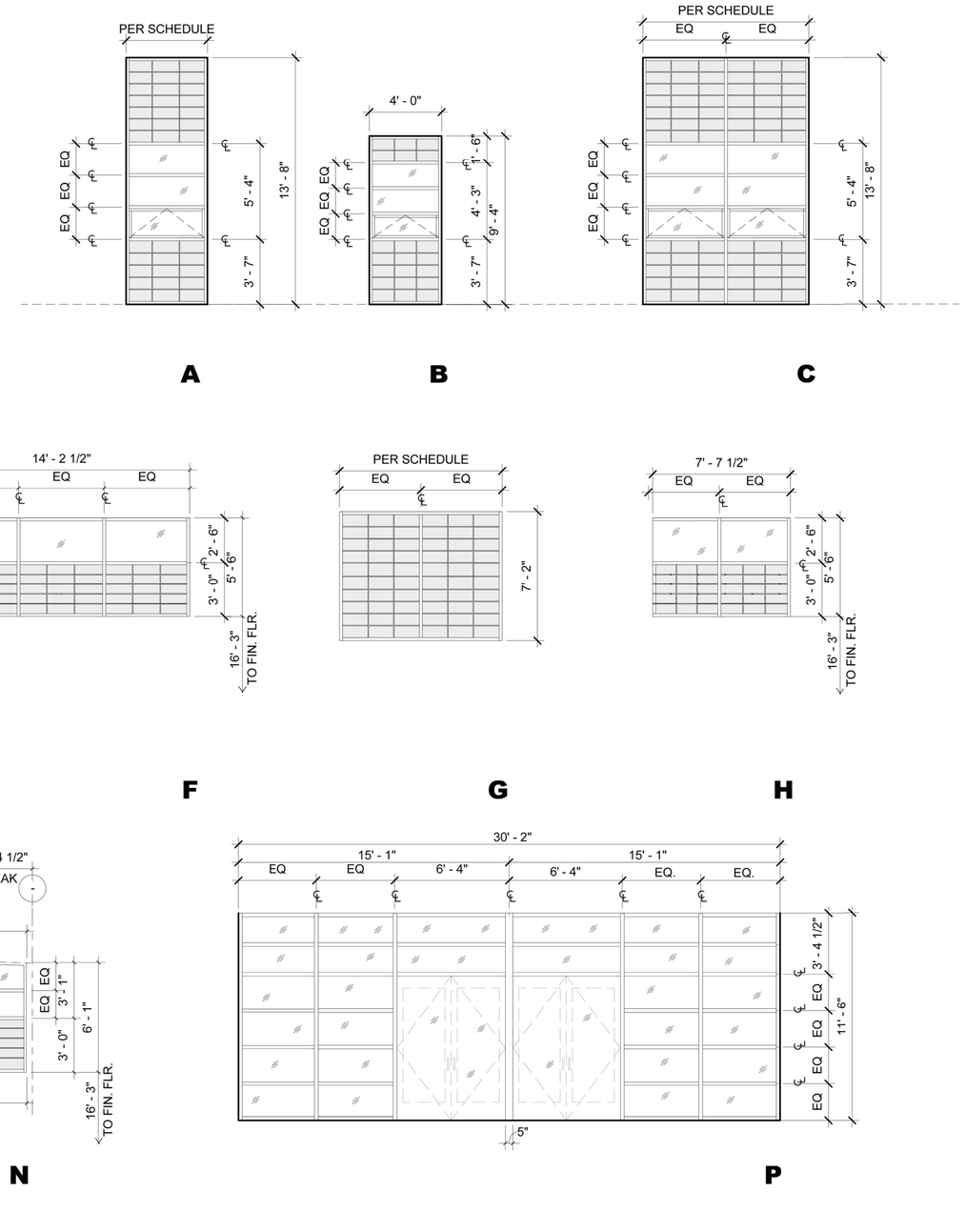

WINDOW LEGEND

EXTERIOR GLAZING 1" INSULATION DUAL-PANE MAX U-VALUE .296, MIN. SOLAR HEAT GAIN COEFFICIENT .23

INSULATED TRANSLUCENT WALL PANEL SYSTEM

REGISTERED ARCHITECT JOHN BRUCE CAMINO C23740 Signature 10/31/11 RenewalDate STATE OF CALIFORNIA

DEVELOPMENT ONE, INC.
1611 East Fourth Street, Suite 250
Santa Ana, California 92701
J. Bruce Camino, Architect, AIA, NCARB
(714) 689-0298
(714) 648-0197 FAX

DATE	SYM	REVISION	BY	A'PD

NATIONAL AERONAUTICS AND SPACE ADMINISTRATION

DRYDEN FLIGHT RESEARCH CENTER
EDWARDS, CA

DRAWING TITLE

FIRST AND FLAT ROOF LEVEL WINDOW SCHEDULE

PROJECT TITLE

FACILITIES SUPPORT CENTER BUILDING
100% FINAL DESIGN SUBMITTAL

APPROVALS		DATE
Chief, Facilities Engineering Division/Project Office DAN CROWLEY		4/14/11
Project Requestor /Customer DAN CROWLEY		4/14/11
Facilities Project Manager GEMMA FLORES		4/14/11
Chief, Office of Protective Services JOHN ZELLMER		4/14/11
Chief - Safety, Health, and Environmental Office DAN MULLEN		4/14/11
DFRC Chief Information Officer KEN NORLIN		4/14/11

DATE STRTD	11/10/09	DATE PRNTD	03/14/11
DRAWN BY		EDM-1703	
SCALE	AS NOTED	TRADE S-I. No.	
FILE NAME		A7.1	SHEET No. 64 of 193

MEZZANINE LEVEL WINDOW SCHEDULE									
NUMBER	TYPE	ROUGH OPENING		THICKNESS	FRAME	HEAD	JAMB	SILL	REMARKS
		WIDTH	HEIGHT						
58	R	4' - 0"	4' - 0"	4"	AL	1/A10.2	1/A10.2	14/A10.1	
59	R	4' - 0"	4' - 0"	4"	AL	1/A10.2	1/A10.2	14/A10.1	
60	R	4' - 0"	4' - 0"	4"	AL	1/A10.2	1/A10.2	14/A10.1	
61	R	4' - 0"	4' - 0"	4"	AL	1/A10.2	1/A10.2	14/A10.1	
62	R	4' - 0"	4' - 0"	4"	AL	1/A10.2	1/A10.2	14/A10.1	
63	R	4' - 0"	4' - 0"	4"	AL	1/A10.2	1/A10.2	14/A10.1	
64	R	4' - 0"	4' - 0"	4"	AL	1/A10.2	1/A10.2	14/A10.1	
65	R	4' - 0"	4' - 0"	4"	AL	1/A10.2	1/A10.2	14/A10.1	
66	Q	19' - 4"	7' - 4"	4"	AL	1/A10.2	2/A10.2	6/A10.2	
68	R	4' - 0"	4' - 0"	4"	AL	1/A10.2	1/A10.2	14/A10.1	
69	R	4' - 0"	4' - 0"	4"	AL	1/A10.2	1/A10.2	14/A10.1	
69	R	4' - 0"	4' - 0"	4"	AL	1/A10.2	1/A10.2	14/A10.1	
70	R	4' - 0"	4' - 0"	4"	AL	1/A10.2	1/A10.2	14/A10.1	
71	R	4' - 0"	4' - 0"	4"	AL	1/A10.2	1/A10.2	14/A10.1	
72	R	4' - 0"	4' - 0"	4"	AL	1/A10.2	1/A10.2	14/A10.1	
73	R	4' - 0"	4' - 0"	4"	AL	1/A10.2	1/A10.2	14/A10.1	
74	R	4' - 0"	4' - 0"	4"	AL	1/A10.2	1/A10.2	14/A10.1	
75	R	4' - 0"	4' - 0"	4"	AL	1/A10.2	1/A10.2	14/A10.1	
76	R	4' - 0"	4' - 0"	4"	AL	1/A10.2	1/A10.2	14/A10.1	

Grand total: 19

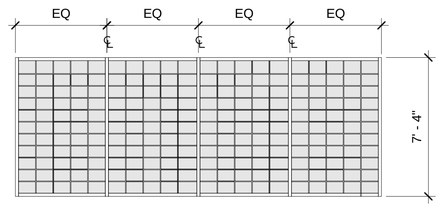

Q

R

EXTERIOR GLAZING 1" INSULATION
DUAL-PANE MAX U-VALUE .296, MIN.
SOLAR HEAT GAIN COEFFICIENT .23

INSULATED TRANSLUCENT WALL
PANEL SYSTEM

DEVELOPMENT ONE, INC.
1611 East Fourth Street, Suite 250
Santa Ana, California 92701
J. Bruce Camino, Architect, AIA, NCARB
(714) 689-0298
(714) 648-0197 FAX

DATE	SYM	REVISION	BY	A'PD

NATIONAL AERONAUTICS AND SPACE ADMINISTRATION

DRYDEN FLIGHT RESEARCH CENTER
EDWARDS, CA

DRAWING TITLE

MEZZANINE LEVEL WINDOW SCHEDULE

PROJECT TITLE

FACILITIES SUPPORT CENTER BUILDING
100% FINAL DESIGN SUBMITTAL

APPROVALS	DATE
Chief, Facilities Engineering Assessment Office DAN CROWLEY	4/14/11
Project Requestor /Customer DAN CROWLEY	4/14/11
Facilities Project Manager GEMMA FLORES	4/14/11
Chief, Office of Protective Services JOHN ZELLMER	4/14/11
Chief - Safety, Health, and Environmental Office DAN MULLEN	4/14/11
DFRC Chief Information Officer KEN NORLIN	4/14/11

DATE STRTD	11/19/10	DATE PRNTD	03/14/11
DRAWN BY		EDM-1703	
SCALE	AS NOTED	TRADE SH. No.	
FILE NAME		A7.2	SHEET No. 65 of 193

ROOM FINISH SCHEDULE

RM#	NAME	FLOOR: 2"X2" CER. TILE 1	FLOOR: S.S. GRATING	FLOOR: LINOLEUM COMP. TILE (LCT 1)	FLOOR: CARPET TILE (CARPET 1)	FLOOR: SEALED CONCRETE	FLOOR: CONC. TOPPING 1	BASE: VINYL COVE BASE 1	BASE: TILE COVE BASE 2	WALLS: CMU 'A'	WALLS: CORRUGATED METAL (PANEL 1)	WALLS: PAINTED GWB (PAINT 1)	WALLS: 4"X4" TILE 1 & 2 4'-0" WAINSCOT	WALLS: 4"X4" TILE 1	WALLS: MPI GLOSS LEVELS	CEILING: SUSPENDED ACT (CEILING 1)	CEILING: CURVED MTL PANEL (CEILING 2)	CEILING: METAL SOFFIT PANEL (CEILING 3)	CEILING: PAINTED SUSPENDED GWB (PAINT 1)	CEILING: OPEN TO ABOVE	CASEWORK: COUNTER 1	CASEWORK: BUILT-IN CABINETS (PLAM 1)	CASEWORK: BUILT-IN LOCKERS & BENCHES (HDPE 1)	REMARKS
100	LOBBY						●	●				●			G5		●							
100A	VESTIBULE		●								●				G3			●						
101	CONFERENCE RM				●			●				●			G3		●							
102	BREAK ROOM				●			●				●			G3	●								
103	CORRIDOR		●				●	●		●		●			G3	●								
104	CORRIDOR		●				●	●		●		●			G3	●								
105	VESTIBULE						●	●				●			G3	●								
106	MEN	●							●			●	●	●	G5				●		●			
107	MEN'S SHOWER	●							●			●	●	●	G5				●		●		●	
108	WOMEN	●							●			●	●	●	G5				●		●			
109	WOMEN'S SHOWER	●							●			●	●	●	G5				●		●		●	
110	HEALTH LAB				●			●				●			G3	●					●	●		
111	ELECTRICAL					●		●				●			G1					●				
112	COMM. ROOM				●			●		●		●			G1					●				
113	STORAGE				●			●		●		●			G1					●				
114	SUPPLY				●			●		●		●			G1					●				
115	LAUNDRY				●			●		●		●			G5					●				
120	OFFICE SUITE		●		●			●				●			G3	●	●							
121	COPY			●				●				●			G5	●					●	●		
122	OFFICE – A				●			●				●			G3	●								
123	OFFICE – A				●			●				●			G3	●								
124	OFFICE – A				●			●				●			G3	●								
125	OFFICE – A				●			●				●			G3	●								
126	OFFICE – A				●			●				●			G3	●								
127	OFFICE – B				●			●				●			G3	●								
128	CONFERENCE				●			●				●			G3	●								
130	OFFICE SUITE		●		●			●				●			G3	●	●							
131	COPY			●				●				●			G5	●					●	●		
131A	COMM. ROOM			●				●				●			G3	●								
132	OFFICE – A				●			●				●			G3	●								
133	OFFICE – A				●			●				●			G3	●								
134	OFFICE – A				●			●				●			G3	●								
135	OFFICE – A				●			●				●			G3	●								
136	OFFICE – B				●			●				●			G3	●								
137	CONFERENCE				●			●				●			G3	●								
140	OFFICE SUITE		●		●			●				●			G3	●	●							
141	COPY			●				●				●			G5	●					●	●		
142	OFFICE – B				●			●				●			G3	●								
143	OFFICE – B				●			●				●			G3	●								
144	OFFICE – A				●			●				●			G3	●								
145	OFFICE – A				●			●				●			G3	●								

ROOM FINISH SCHEDULE

RM#	NAME	FLOOR: ENTRANCE FLOORING	FLOOR: LINOLEUM COMP. TILE (LCT 1)	FLOOR: CARPET TILE (CARPET 1)	FLOOR: SEALED CONCRETE	FLOOR: CONC. TOPPING 1	BASE: VINYL COVE BASE 1	BASE:	WALLS: PAINTED GWB (PAINT 1)	WALLS: MPI GLOSS LEVELS	CEILING: SUSPENDED ACT (CEILING 1)	CEILING: CURVED MTL PANEL (CEILING 2)	CEILING: OPEN TO ABOVE	CASEWORK: COUNTER 1	CASEWORK: BUILT-IN CABINETS (PLAM 1)	CASEWORK:	REMARKS
146	CONFERENCE			●			●		●	G3	●						
150	CONFERENCE ROOM			●			●		●	G3		●					
160	OFFICE SUITE			●			●		●	G3	●						
161	HOT WORK SHOP				●		●		●	G1			●				
162	OFFICE			●			●		●	G3	●						
164	OFFICE			●			●		●	G3	●						
165	OFFICE			●			●		●	G3	●						
167	OFFICE			●			●		●	G3	●						
168	PLAN AND TRAINING			●			●		●	G3	●			●	●		
169	TOOL CRIB				●		●		●	G1			●				
170	TEST & DEVELOPMENT				●		●		●	G1			●	●	●		
171	JANITOR STAFF		●				●		●	G1			●				
172	VESTIBULE	●	●				●		●	G3	●						
175	SHOP				●		●		●	G1			●				
177	STAIR #1		●			●	●		●	G5			●				MICRO–TOPPING AT STAIR TREADS
178	STAIR #2	●			●	●	●		●	G5			●				MICRO–TOPPING AT STAIR TREADS
200	MEZZANINE				●		●		●	G1			●				
201	BOILER ROOM				●		●		●	G1			●				
205	CHILLER ROOM				●		●		●	G1			●				

NOTES

MPI GLOSS LEVELS

MPI GLOSS LEVELS ARE AS FOLLOWS AND AS DESCRIBED IN THE SPECIFICATIONS:

G1 – MATTE OR FLAT
G2 – VELVET
G3 – EGGSHELL
G4 – SATIN
G5 – SEMI–GLOSS
G6 – GLOSS
G7 – HIGH GLOSS

UNITS AT 60 DEGREES:
GI – 0 TO 5
G2 – 0 TO 10
G3 – 10 TO 25
G4 – 20 TO 35
G5 – 35 TO 70
G6 – 70 TO 85

UNITS AT 85 DEGREES:
G1 – 10 MAX
G2 – 10 TO 35
G3 – 10 TO 35
G4 – 35 MIN

GENERAL NOTES

1. MANUFACTURERS, COLORS, AND PATTERNS ARE LISTED AS A BASIS OF DESIGN. ALL FINISHES SHALL BE PROVIDED AS SPECIFIED, OR AN APPROVED EQUAL, AS DESCRIBED IN THE SPECIFICATIONS.

2. ALL FINISHES SHALL BE SELECTED IN ACCORDANCE WITH THE SPECIFICATIONS AND TO COMPLY WITH LEED 2009 CERTIFICATION REQUIREMENTS.

FINISH LEGEND

CMU 'A'	ANGELUS/DESERT BLOCK (OAE) – BURNISHED CMU, COLOR "CHAMPAGNE"	PANEL 1	PAC–CLAD (OAE) CORRUGATED METAL PANEL, COLOR "CHAMPAGNE", 7/8"
CMU 'B'	ANGELUS/DESERT BLOCK (OAE) – BURNISHED CMU, COLOR "SLATE"	CEILING 1	USG (OAE) SUSPENDED ACOUSTIC CEILING TILE AND GRID – RADAR CLIMA PLUS HIGH–NRC (.70), 2'X2'
CARPET 1	MILLIKEN CARPET TILE (OAE) WITH ESP BACKING AND TRACTIONBACK – COLOR AND PATTERN TO BE SUBMITTED FOR SELECTION AND APPROVAL	CEILING 2	USG (OAE) CURVED METAL CEILING PANEL – CURVATURA ONE–DIRECTIONAL 3D, COLOR "METALLIC OYSTER", PERFORATION PATTERN D375, 2'X6'
BASE 1	ROPPE 4" VINYL COVE BASE (OAE) – COLOR 114 "LUNAR DUST"		
BASE 2	DAL TILE "ECO TILE" NATURAL HUES (OAE) – COLOR QH43 "ATLANTIS", 4"X4" COVE BASE	CEILING 3	PAC–CLAD (OAE) SOFFIT FLUSH PANEL – 24 GA. GALV. STEEL, COLOR "CHAMPAGNE", 12" O.C.
LCT 1	FORBO (OAE) LINOLEUM COMPOSITION TILE – MARMOLEUM MCT, COLOR TO BE SUBMITTED FOR SELECTION AND APPROVAL, 13"X13"	PAINT1	VISTA PAINT (OAE) EARTH COAT SERIES – COLOR 80 "OAT CAKE" ALL INTERIOR WALLS, U.O.N.
CONCRETE TOPPING 1	1/8" CONCRETE MICRO–TOPPING – ARDEX SD–M OR EQUAL, COLOR TO BE SELECTED FROM MFR'S STANDARD PALETTE.	COUNTER 1	BRADLEY SOLID SURFACE COUNTERTOPS (OAE) – TERREON RE, COLOR "OAT"
ENTRANCE FLOORING	C/S GROUP (OAE) ENTRANCE FLOORING SYSTEM – FLOOROMETRY 101, STAINLESS STEEL, STANDARD PATTERN, 18"X18"	PLAM 1	PIONITE (OAE) PLASTIC LAMINATE SURFACES, COLOR "SLATE" AT ALL CASEWORK U.O.N.
TILE 1	DAL TILE "ECO TILE" NATURAL HUES (OAE) – COLOR QH02 "ALMOND", 2X2 AT FLOOR, 4X4 AT WAINSCOT AND WALLS	HDPE 1	BRADLEY (OAE) HDPE LOCKERS AND BENCHES, LENOX SERIES, COLOR "CHARCOAL GRAY"
TILE 2	DAL TILE "ECO TILE" NATURAL HUES (OAE) – COLOR QH43 "ATLANTIS", 1 ROW AT TOP OF WAINSCOT		

LICENSED ARCHITECT
JOHN BRUCE CAMINO
C23740
Signature
10/31/11
Renewal Date
STATE OF CALIFORNIA

DEVELOPMENT ONE, INC.
1611 East Fourth Street, Suite 250
Santa Ana, California 92701
J.Bruce Camino, Architect, AIA, NCARB
(714) 689-0298
(714) 648-0197 FAX

DATE	SYM	REVISION	BY	A'PD

NATIONAL AERONAUTICS AND SPACE ADMINISTRATION
DRYDEN FLIGHT RESEARCH CENTER
EDWARDS, CA

DRAWING TITLE
FINISH SCHEDULE

PROJECT TITLE
FACILITIES SUPPORT CENTER BUILDING
100% FINAL DESIGN SUBMITTAL

APPROVALS	DATE
Chief, Facilities Engineering & Asset Mngt. Office DAN CROWLEY	4/14/11
Project Requestor/Customer DAN CROWLEY	4/14/11
Facilities Project Manager GEMMA FLORES	4/14/11
Chief, Office of Protective Services JOHN ZELLMER	4/14/11
Chief – Safety, Health and Environmental Office DAN MULLEN	4/14/11
DFRC Chief Information Officer KEN NORLIN	4/14/11

DATE STRTD	11/04/10	DATE PRNTD	03/14/11
DRAWN BY		EDM–1703	
SCALE	AS NOTED	TRADE SH. No.	A7.3
FILE NAME		SHEET No.	66 of 193

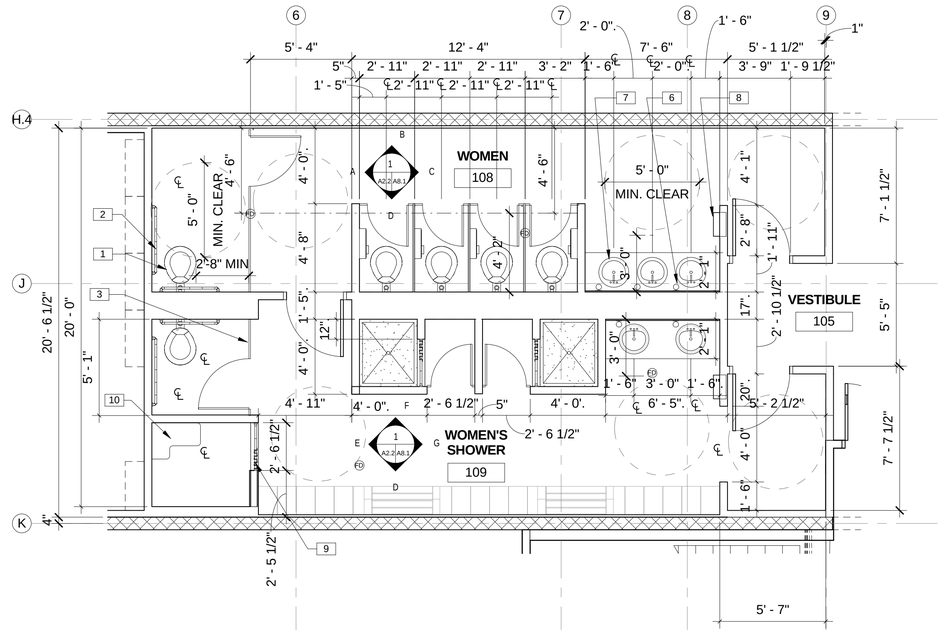

ENLARGED WOMEN RESTROOM PLAN

SCALE: 1/4" = 1'-0" | 2 | A2.4 | A8.0

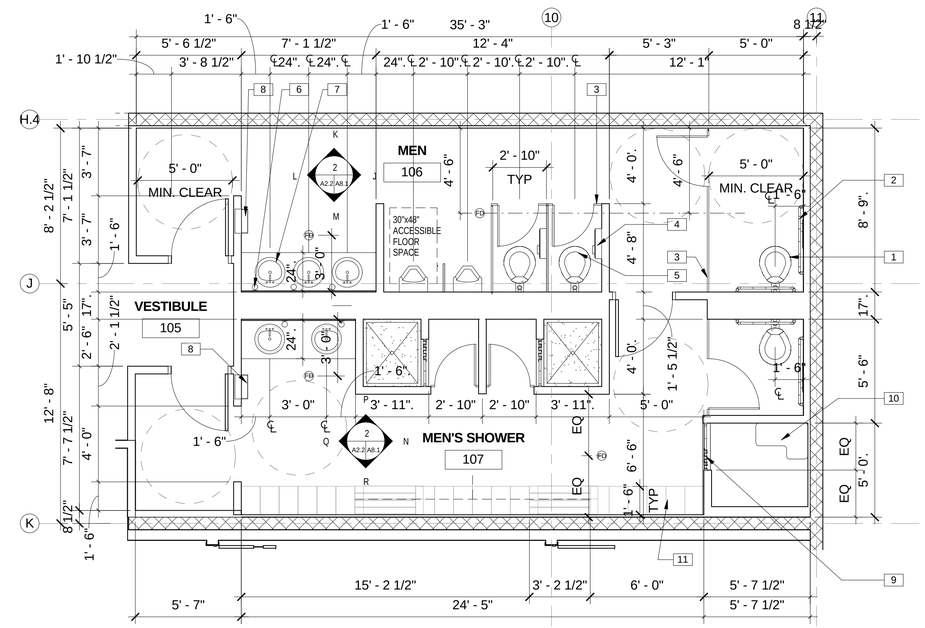

ENLARGED MEN RESTROOM PLAN

SCALE: 1/4" = 1'-0" | 1 | A2.4 | A8.0

KEYNOTES:

1. 15" HIGH ACCESSIBLE AUTOMATIC DUAL- FLUSH WALL MOUNTED TOILET - WHITE VITREOUS CHINA, TYP
2. S.S. GRAB BAR, 250 POUND CAPACITY, SEE DETAIL 5/A11.4
3. SOLID POLYMER PLASTIC TOILET PARTITION, SEE DETAIL 4/A11.4
4. SURFACE MOUNTED TOILET TISSUE AND SEAT COVER DISPENSER
5. 17" HIGH ACCESSIBLE AUTOMATIC DUAL- FLUSH WALL MOUNTED TOILET - WHITE VITREOUS CHINA
6. SOAP DISPENSER
7. LAVATORY AND FAUCET PER ADA REQUIREMENTS, SEE PLUMBING DRAWINGS FOR ADA LAVATORY COMPLIANCE DETAIL
8. RECESS PAPER TOWEL DISPENSER W/ WASTE RECEPTACLE
9. SHOWER CURTAIN
10. SHOWER SEAT, SEE DETAIL
11. LOCKER & BENCHS
12. SUSPENDED GYPSUM BOARD CEILING, SEE DETAIL 1/11.2
13. 14" X 14" GWB CEILING ACCESS PANEL, SEE DETAIL 6/A11.2

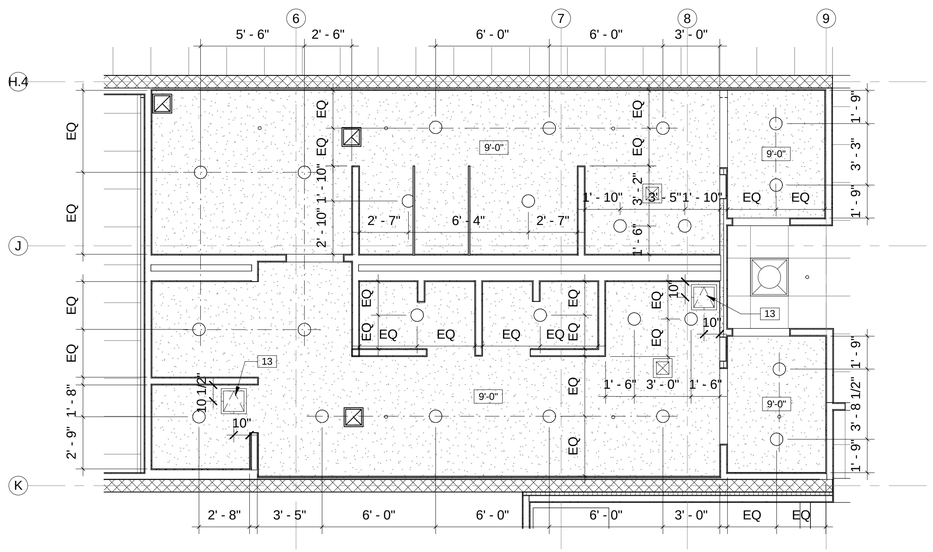

ENLARGED WOMEN RESTROOM RCP

SCALE: 1/4" = 1'-0" | 4 | A3.2 | A8.0

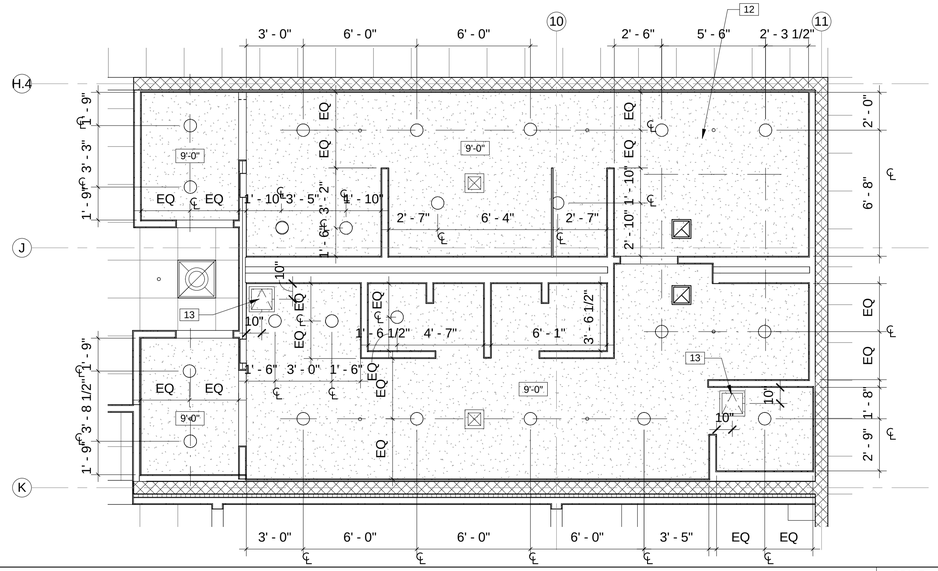

ENLARGED MEN RESTROOM RCP

SCALE: 1/4" = 1'-0" | 3 | A3.2 | A8.0

RCP LEGEND:

- 2' X 2' SUSPENDED CEILING GRID WITH ACOUSTICAL TILES & TRIGULAR EDGE. SEE DETAIL 7/A11.2
- SUSPENDED GYPSUM BOARD CEILING SEE DETAIL 1/ A11.2
- CEILING GRILLE - EXHAUST
- CEILING GRILLE -RETURN
- CEILING GRILLE -SUPPLY
- X'-X" CEILING HEIGHT, ABOVE FINISH FLOOR (A.F.F.)
- RECESSED MOUNTED LED CEILING LIGHT FIXTURE, SEE DETAIL 3/A11.2
- 5'-0" DIA. ADA MIN CLR.

NOTE:
1. SEE A11.3 FOR ACCESSIBILITY NOTES, DIMENSIONS & DETAILS
2. PROVIDE 4" HIGH CONCRETE CURB TO ALL TOILET WALLS, SEE DETAIL 11/A11.3

DEVELOPMENT ONE, INC.
1611 East Fourth Street, Suite 250
Santa Ana, California 92701
J. Bruce Camino, Architect, AIA, NCARB
(714) 689-0298
(714) 648-0197 FAX

DATE	SYM	REVISION	BY	A'PD

NATIONAL AERONAUTICS AND SPACE ADMINISTRATION

DRYDEN FLIGHT RESEARCH CENTER
EDWARDS, CA

DRAWING TITLE

ENLARGED RESTROOM PLANS

PROJECT TITLE

FACILITIES SUPPORT CENTER BUILDING
100% FINAL DESIGN SUBMITTAL

APPROVALS		DATE
Chief, Facilities Engineering Branch, Office of Center Operations DAN CROWLEY		4/14/11
Project Requestor /Customer DAN CROWLEY		4/14/11
Facilities Project Manager GEMMA FLORES		4/14/11
Chief, Office of Protective Services JOHN ZELLMER		4/14/11
Chief - Safety, Health, and Environmental Office DAN MULLEN		4/14/11
DFRC Chief Information Officer KEN NORLIN		4/14/11

DATE STRTD	11/08/10	DATE PRNTD	03/14/11
DRAWN BY		EDM-1703	
SCALE	AS NOTED	TRADE SH. No.	
FILE NAME	A8.0	SHEET No. 67 of 193	

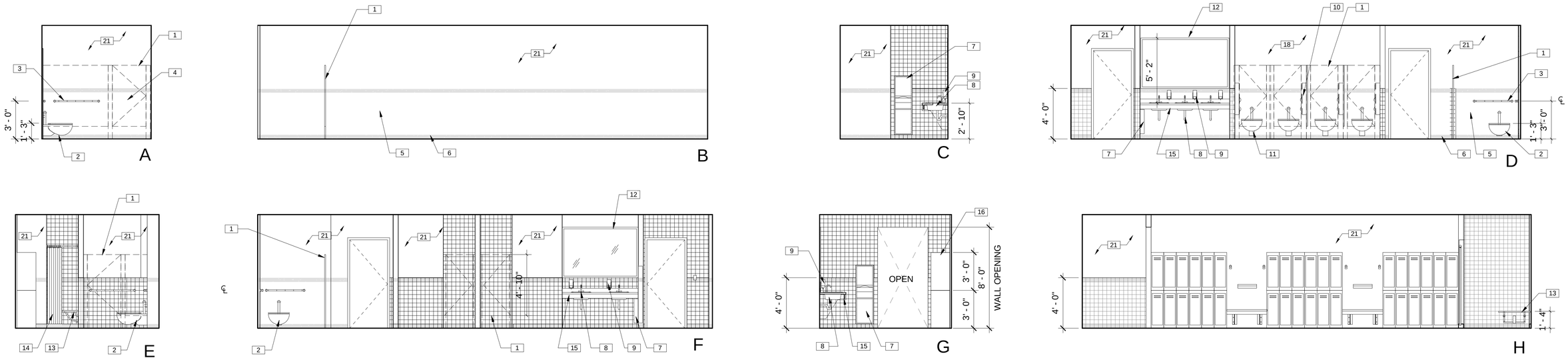

INTERIOR ELEVATIONS - WOMEN'S RESTROOM & SHOWER ROOM

SCALE: 1/4" = 1'-0" | 1 | A2.2 | A8.1

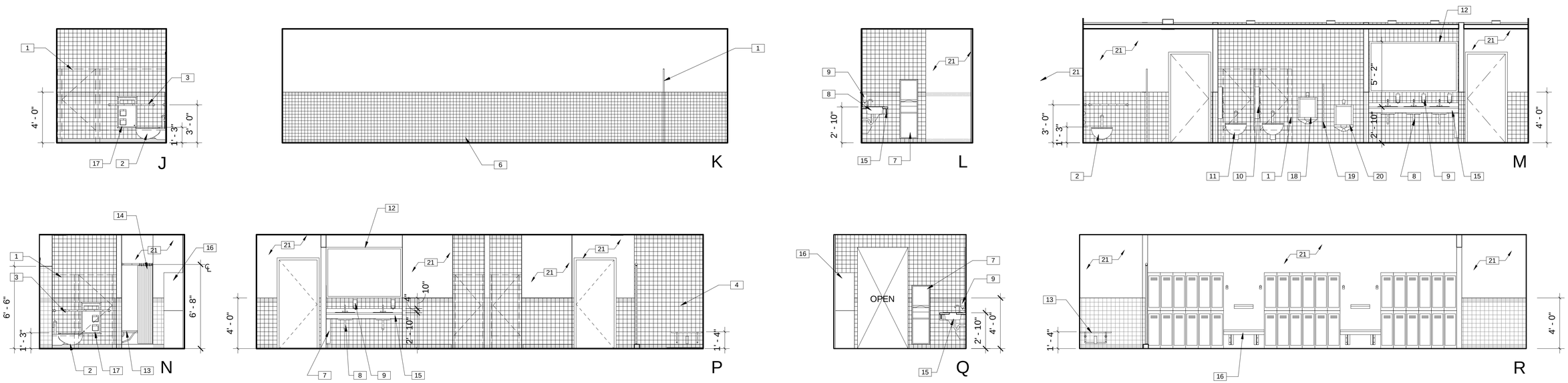

INTERIOR ELEVATIONS - MEN'S RESTROOM & SHOWER ROOM

SCALE: 1/4" = 1'-0" | 2 | A2.2 | A8.1

KEYNOTES:

1. SOLID POLYMER PLASTIC TOILET PARTITION, SEE DETAIL 4/A11.4
2. 15" HIGH ACCESSIBLE AUTOMATIC DUAL- FLUSH WALL MOUNTED TOILET - WHITE VITREOUS CHINA, TYP
3. S.S. GRAB BAR, 250 POUND CAPACITY, SEE DETAIL 5/A11.4
4. 4" X 4" CERAMIC WALL TILE OVER 5/8" MOISTURE RESISTANT GWB - COLOR "A" PER FINISH SCHEDULE
5.
6. 4" X 4" CERAMIC WALL TILE COVE BASE OVER 5/8" MOISTURE RESISTANT GWB - COLOR "B" PER FINISH SCHEDULE
7. RECESS PAPER TOWEL DISPENSER W/ WASTE RECEPTACLE
8. LAVATORY AND FAUCET PER ADA REQUIREMENTS, SEE PLUMBING DRAWINGS FOR ADA LAVATORY COMPLIANCE DETAIL
9. SOAP DISPENSER
10. SURFACE MOUNTED TOILET TISSUE AND SEAT COVER DISPENSER
11. 17" HIGH ACCESSIBLE AUTOMATIC DUAL- FLUSH WALL MOUNTED TOILET - WHITE VITREOUS CHINA
12. SURFACE MOUNTED MIRROR
13. SHOWER SEAT, SEE DETAIL
14. ~~SHOWER CURTAIN~~
15. SOLID SURFACE COUNTERTOP WITH INTEGRATED 4" BACKSPLASH
16. LOCKER & BENCHS
17. RECESS MOUNTED TOILET TISSUE AND SEAT COVER DISPENSER
18. 24" HIGH ACCESSIBLE LOW- FLOW URINAL - WHITE VITREOUS CHINA
19. URINAL PARTITION - SOLID POLYMER PLASTIC
20. 17" HIGH ACCESSIBLE LOW- FLOW URINAL - WHITE VITREOUS CHINA
21. PAINTED FINISH, SEE FINISH SCHEDULE

REGISTERED ARCHITECT
JOHN BRUCE CAMINO
C23740
Signature
10/31/11
RenewalDate
STATE OF CALIFORNIA

DEVELOPMENT ONE, INC.
1611 East Fourth Street, Suite 250
Santa Ana, California 92701
J. Bruce Camino, Architect, AIA, NCARB
(714) 689-0298
(714) 648-0197 FAX

DATE	SYM	REVISION	BY	A'PD

NATIONAL AERONAUTICS AND SPACE ADMINISTRATION

DRYDEN FLIGHT RESEARCH CENTER
EDWARDS, CA

DRAWING TITLE

RESTROOM INTERIOR ELEVATIONS

PROJECT TITLE

FACILITIES SUPPORT CENTER BUILDING
100% FINAL DESIGN SUBMITTAL

APPROVALS	DATE
Chief, Facilities Engineering Division, Office DAN CROWLEY	4/14/11
Project Requestor /Customer DAN CROWLEY	4/14/11
Facilities Project Manager GEMMA FLORES	4/14/11
Chief, Office of Protective Services JOHN ZELLMER	4/14/11
Chief - Safety, Health, and Environmental Office DAN MULLEN	4/14/11
DFRC Chief Information Officer KEN NORLIN	4/14/11

DATE STRTD	11/08/10	DATE PRNTD	03/14/11
DRAWN BY		EDM-1703	
SCALE	AS NOTED	TRADE SH. No.	
FILE NAME		A8.1	SHEET No. 68 of 193

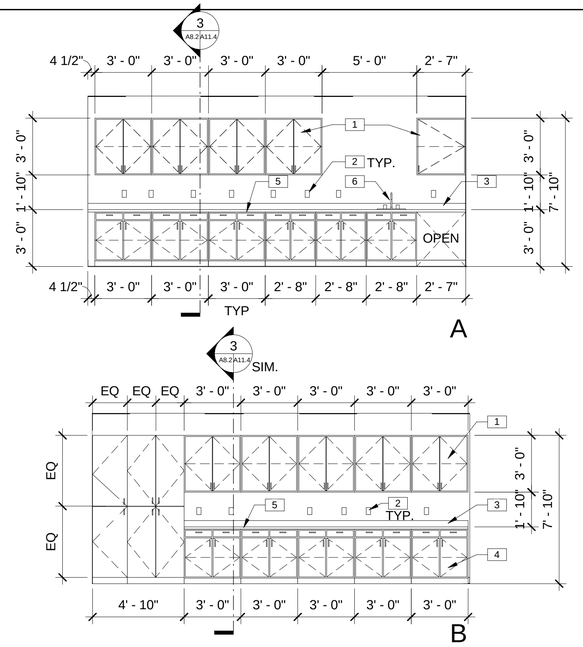

HEALTH LAB 110 - INTERIOR ELEVATIONS

SCALE: 1/4" = 1'-0" | 5 | A2.3 | A8.2

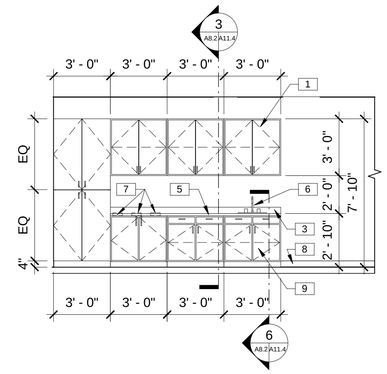

COPY ROOM 121 - INTERIOR ELEVATION

SCALE: 1/4" = 1'-0" | 3 | A2.1 | A8.2

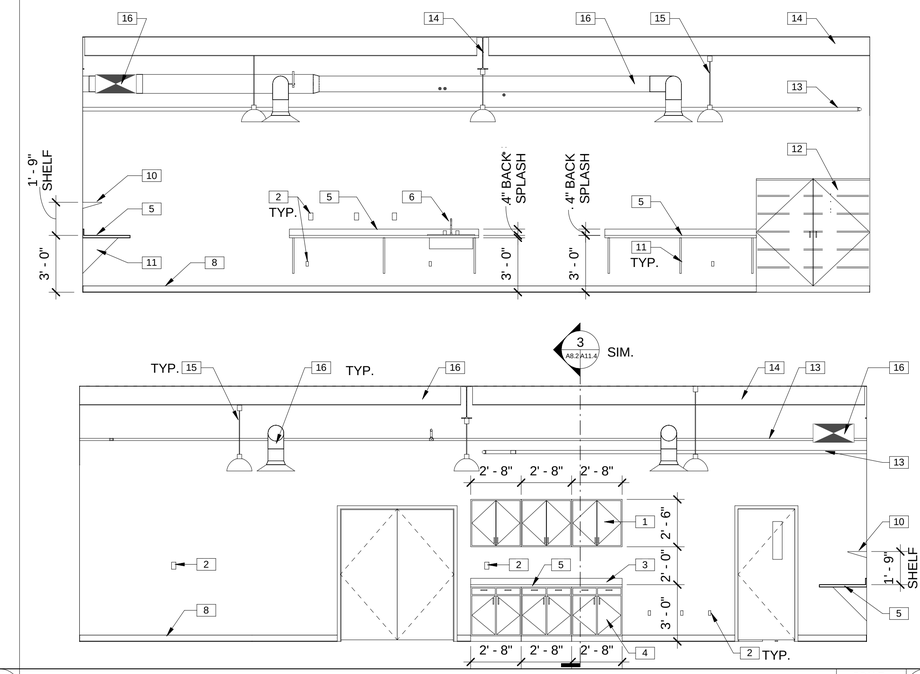

TEST & DEVELOPMENT SHOP/LAB

SCALE: 1/4" = 1'-0" | 1 | A2.4 | A8.2

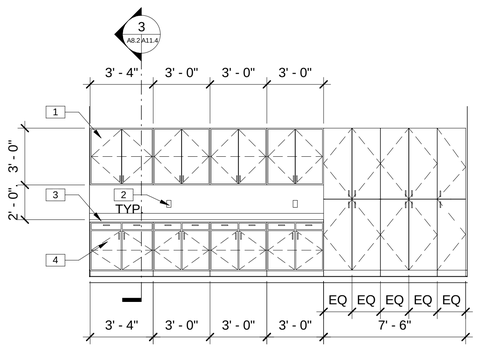

PLAN AND TRAINING 168 - INTERIOR ELEVATION

SCALE: 1/4" = 1'-0" | 6 | A2.2 | A8.2

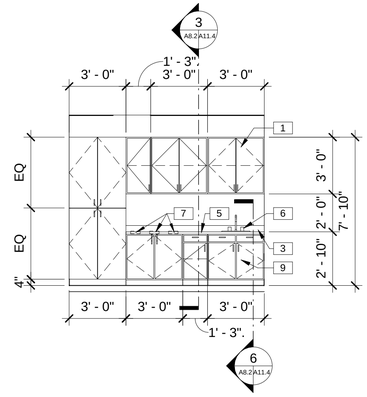

COPY ROOM 131 - INTERIOR ELEVATION

SCALE: 1/4" = 1'-0" | 4 | A2.1 | A8.2

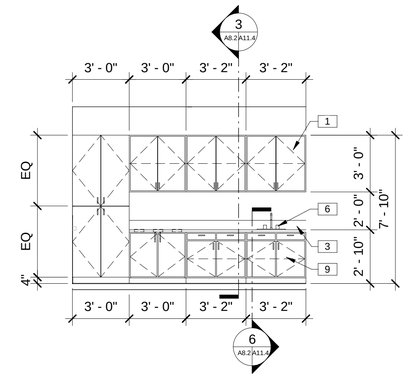

COPY ROOM 141 - INTERIOR ELEVATION

SCALE: 1/4" = 1'-0" | 2 | A2.1 | A8.2

INTERIOR ELEVATION KEYNOTES:

1. WALL HUNG CABINET, FINISH SURFACE PER SCHEDULE, SEE DETAIL 3/A11.4
2. ELECTRICAL OUTLET PER ELECTRICAL PLANS
3. 4" BACKSPLASH
4. BASE CABINET, SEE DETAIL 3/A11.4
5. COUNTERTOP FINISH SURFACE PER FINISH SCHEDULE
6. COUNTERTOP SINK, SEE PLUMBING PLANS
7. 8" DIA. OPENING IN COUNTERTOP FOR RECYCLABLES
8. 4" RUBBER BASE SEE FINISH SCHEDULE
9. ACCESSIBLE BASE CABINET, FINISH SURFACE PER FINISH SCHEDULE, SEE DETAILS 1/A11.4 & 6/A11.4
10. WALL MOUNTED ADJUSTABLE SHELVING
11. CORBEL COUNTERTOP SUPPORT
12. METAL CASEWORK PROVIDED BY OWNER - N.I.C.
13. PLUMBING PIPE, SEE PLUMBING PLANS
14. STRUCTURAL MEMBER, SEE STRUCTURAL PLANS
15. LIGHTING FIXTURES, SEE REFLECTED CEILING PLAN AND ELECTRICAL PLANS
16. MECHANICAL DUCT PER MECHANICAL PLANS

REGISTERED ARCHITECT J. BRUCE CAMINO C23740 Signature 10/31/11 RenewalDate STATE OF CALIFORNIA

DEVELOPMENT ONE, INC.
1611 East Fourth Street, Suite 250
Santa Ana, California 92701
J. Bruce Camino, Architect, AIA, NCARB
(714) 689-0298
(714) 648-0197 FAX

DATE	SYM	REVISION	BY	A'PD

NATIONAL AERONAUTICS AND SPACE ADMINISTRATION

DRYDEN FLIGHT RESEARCH CENTER
EDWARDS, CA

DRAWING TITLE

INTERIOR ELEVATIONS

PROJECT TITLE

FACILITIES SUPPORT CENTER BUILDING
100% FINAL DESIGN SUBMITTAL

APPROVALS		DATE
Chief, Facilities Engineering Assoc. Office		
DAN CROWLEY		4/14/11
Project Requestor /Customer		
DAN CROWLEY		4/14/11
Facilities Project Manager		
GEMMA FLORES		4/14/11
Chief, Office of Protective Services		
JOHN ZELLMER		4/14/11
Chief - Safety, Health, and Environmental Office		
DAN MULLEN		4/14/11
DFRC Chief Information Officer		
KEN NORLIN		4/14/11

DATE STRTD	11/20/10	DATE PRNTD	03/14/11
DRAWN BY		EDM-1703	
SCALE	AS NOTED	TRADE SH. No.	
FILE NAME		A8.2	SHEET No. 69 of 193

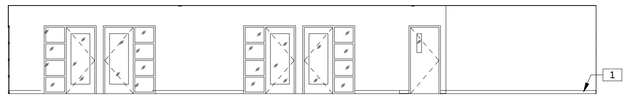

INTERIOR ELEVATION SUITE 160 - EAST

SCALE: 1/8" = 1'-0" | 5 | A2.2 | A8.3

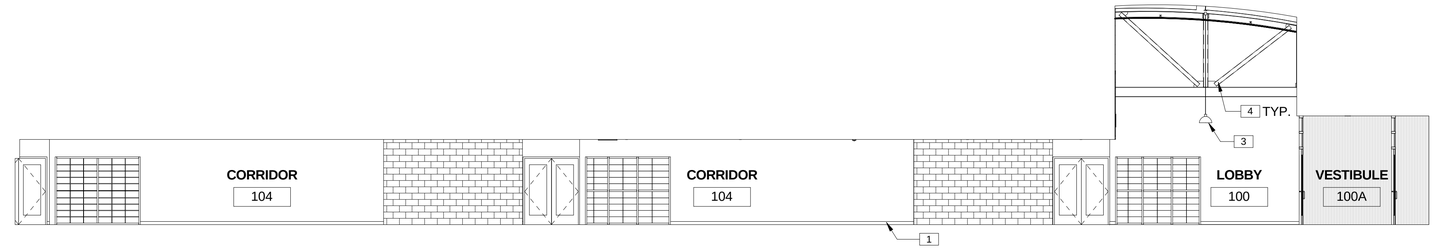

CORRIDOR INTERIOR ELEVATION - NORTH

SCALE: 1/8" = 1'-0" | 1 | A2.1 | A8.3

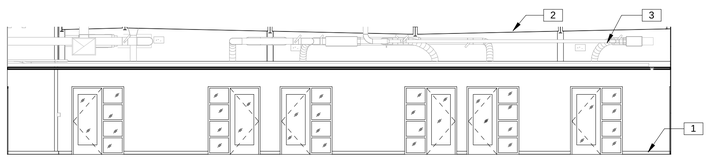

INTERIOR ELEVATION SUITE 140 - WEST

SCALE: 1/8" = 1'-0" | 4 | A2.1 | A8.3

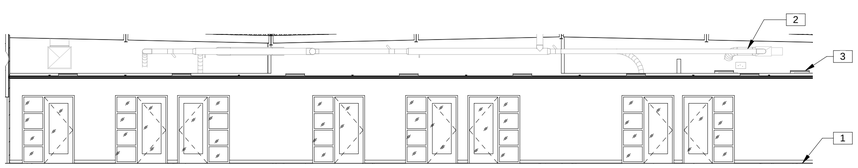

INTERIOR ELEVATION SUITE 120 - WEST

SCALE: 1/8" = 1'-0" | 3 | A2.1 | A8.3

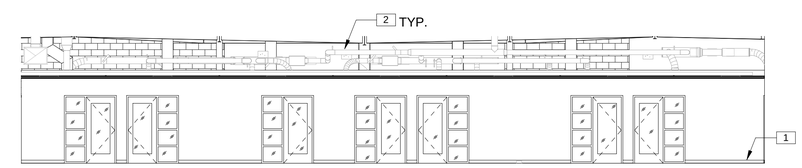

INTERIOR ELEVATION OFFICE SUITE 130 - WEST

SCALE: 1/8" = 1'-0" | 2 | A2.3 | A8.3

INTERIOR ELEVATION KEYNOTES:

1. 4" RUBBER BASE SEE FINISH SCHEDULE
2. MECHANICAL DUCT PER MECHANICAL PLANS
3. LIGHTING FIXTURES, SEE REFLECTED CEILING PLAN AND ELECTRICAL PLANS
4. STRUCTURAL MEMBER, SEE STRUCTURAL PLANS

DEVELOPMENT ONE, INC.
1611 East Fourth Street, Suite 250
Santa Ana, California 92701
J. Bruce Camino, Architect, AIA, NCARB
(714) 689-0298
(714) 648-0197 FAX

DATE	SYM	REVISION	BY	A'PD

NATIONAL AERONAUTICS AND SPACE ADMINISTRATION
DRYDEN FLIGHT RESEARCH CENTER
EDWARDS, CA

DRAWING TITLE
INTERIOR ELEVATIONS

PROJECT TITLE
FACILITIES SUPPORT CENTER BUILDING
100% FINAL DESIGN SUBMITTAL

APPROVALS	DATE
Chief, Facilities Engineering Assist Mgmt Office DAN CROWLEY	4/14/11
Project Requestor /Customer DAN CROWLEY	4/14/11
Facilities Project Manager GEMMA FLORES	4/14/11
Chief, Office of Protective Services JOHN ZELLMER	4/14/11
Chief - Safety, Health, and Environmental Office DAN MULLEN	4/14/11
DFRC Chief Information Officer KEN NORLIN	4/14/11

DATE STRTD	11/23/10	DATE PRNTD	03/14/11
DRAWN BY		EDM-1703	
SCALE	AS NOTED	TRADE SH. No.	
FILE NAME		A8.3	SHEET No. 70 of 193

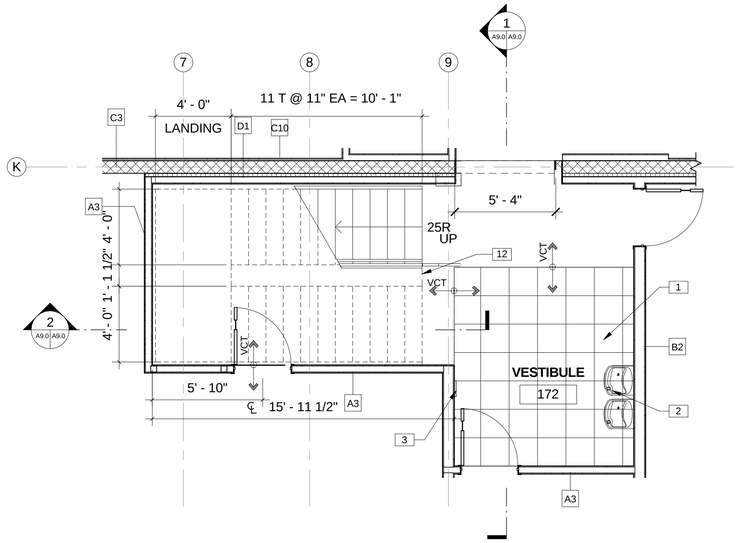

ENLARGED PLAN STAIR 177

SCALE: 1/4" = 1'-0" | 3 A2.4 A9.0

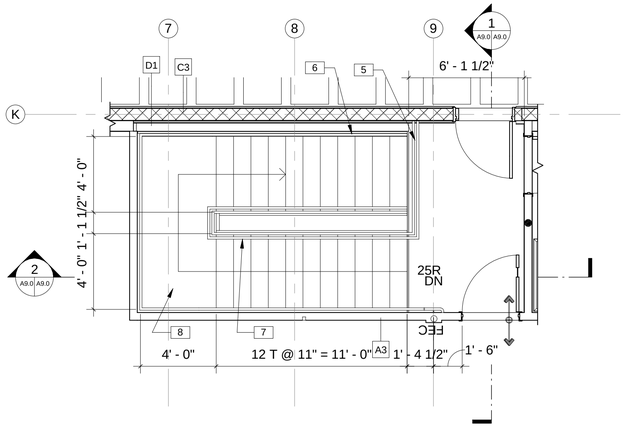

ENLARGED STAIR #1 AT MEZZANINE

SCALE: 1/4" = 1'-0" | 4 A2.5 A9.0

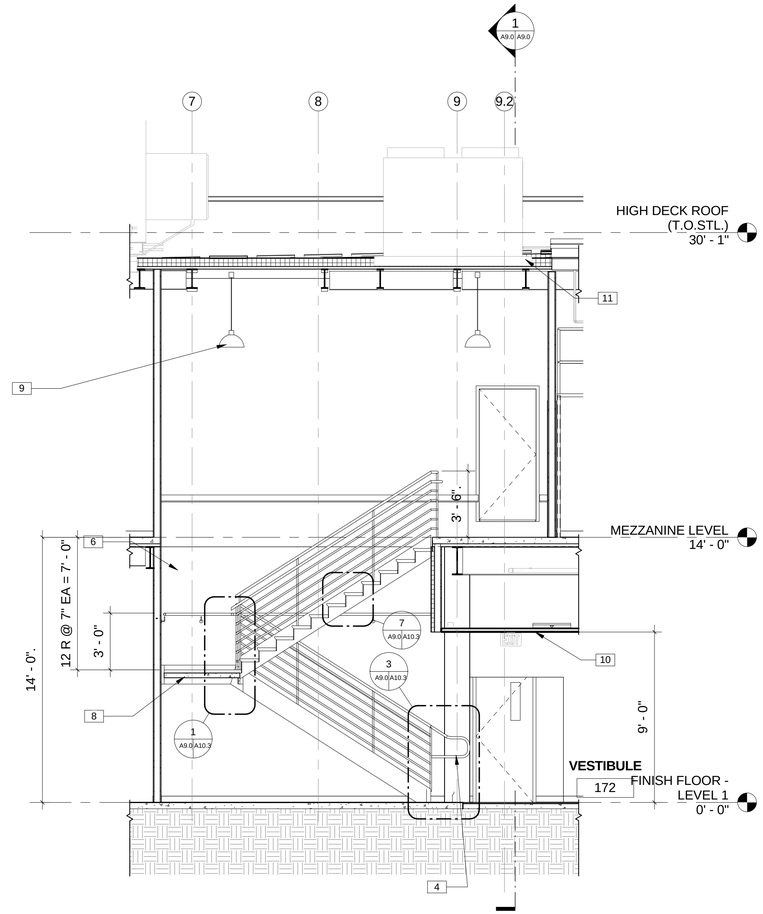

STAIR #1 AT MEZZANINE

SCALE: 1/4" = 1'-0" | 2 A9.0 A9.0

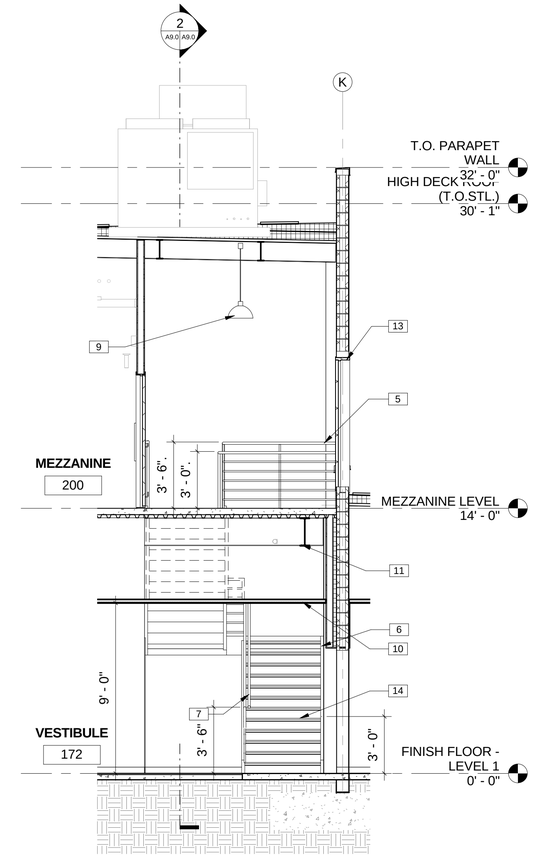

STAIR #1

SCALE: 1/4" = 1'-0" | 1 A9.0 A9.0

KEYNOTES:

1. ENTRY GRID SYSTEM - 18"X18"X3/4" REMOVABLE MODULAR S.S. OPEN GRID TILES IN RECESSED SLAB FLUSH WITH FLOOR FINISH, SEE SLAB PLAN FOR DIMENSIONS
2. ACCESSIBLE DRINKING FOUNTAIN
3. STAIR SIGNAGE - SEE DETAIL 7/A10.7
4. HANDRAIL & GUARDRAIL TO EXTEND 1' - 11" BEYOND FACE OF LOWEST TREAD OF TREAD
5. 42" HIGH METAL GUARDRAILL, SEE DETAIL 4/A10.8
6. 3' - 0" HIGH WALL MOUNTED PAINTED STEEL HANDRAIL, SEE DETAIL 11/A10.7
7. STAIR - MOUNTED PAINTED STEEL 3' - 0" HIGH HANDRAIL
8. CONCRETE FILLED LANDING
9. LED PENDANT LIGHT FIXTURE
10. SUSPENDED CEILING PER PLAN
11. PAINTED STEEL TRUSS - SEE STRUCTURAL DRAWINGS
12. LINE OF FLOOR ABOVE
13. BURNISHED 8" CMU WALL
14. STAIR NOSING, SEE DETAIL 6/A10.7

LEGEND

X — WALL TYPE, SEE SHEET A6.6 & A6.7

FLOOR TRANSITION, SEE SHEET FOR FINISH SCHEDULE

DEVELOPMENT ONE, INC.
1611 East Fourth Street, Suite 250
Santa Ana, California 92701
J. Bruce Camino, Architect, AIA, NCARB
(714) 689-0298
(714) 648-0197 FAX

DATE	SYM	REVISION	BY	A'PD

NATIONAL AERONAUTICS AND SPACE ADMINISTRATION

DRYDEN FLIGHT RESEARCH CENTER
EDWARDS, CA

DRAWING TITLE

ENLARGED STAIR #1 PLAN AND SECTION

PROJECT TITLE

FACILITIES SUPPORT CENTER BUILDING
100% FINAL DESIGN SUBMITTAL

APPROVALS	DATE
Chief, Facilities Engineering Assessment Office DAN CROWLEY	4/14/11
Project Requestor /Customer DAN CROWLEY	4/14/11
Facilities Project Manager GEMMA FLORES	4/14/11
Chief, Office of Protective Services JOHN ZELLMER	4/14/11
Chief - Safety, Health, and Environmental Office DAN MULLEN	4/14/11
DFRC Chief Information Officer KEN NORLIN	4/14/11

DATE STRTD	11/08/10	DATE PRNTD	03/14/11
DRAWN BY		EDM-1703	
SCALE	AS NOTED	TRADE SH. No.	A9.0
FILE NAME		SHEET No. 71 of 193	

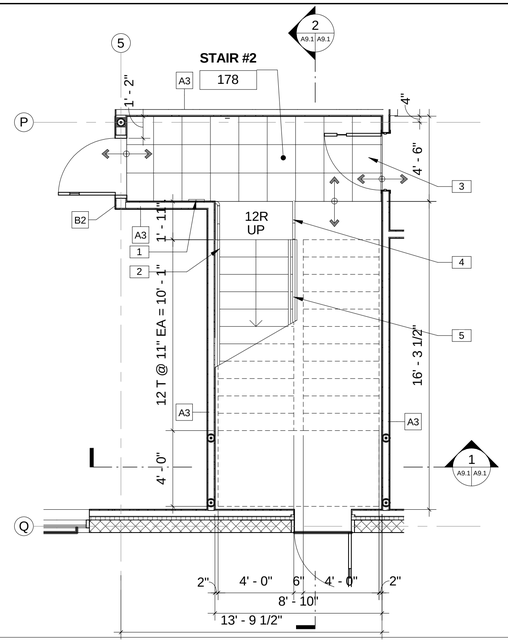

ENLARGED PLAN STAIR 204

SCALE: 1/4" = 1'-0" (3 / A2.4 A9.1)

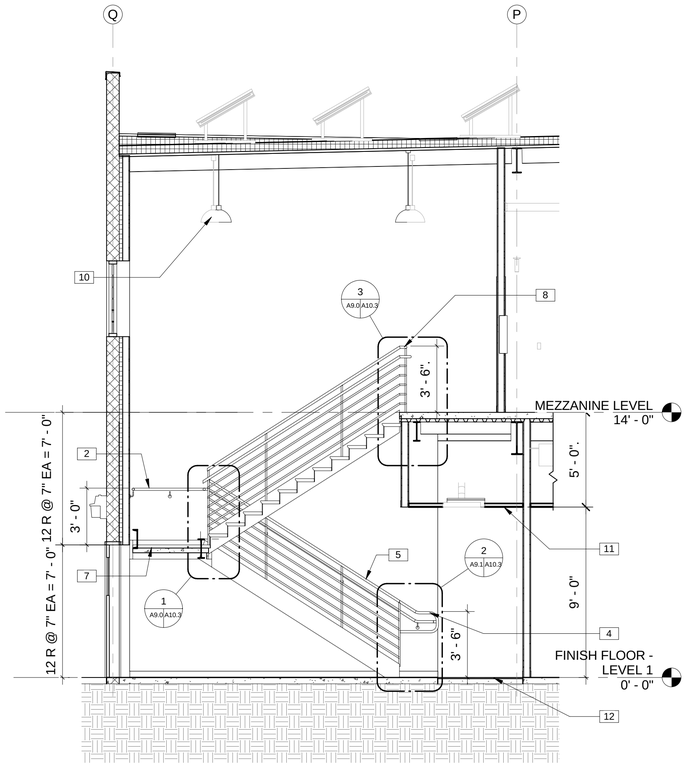

ENLARGED STAIR #2 SECTION

SCALE: 1/4" = 1'-0" (2 / A9.1 A9.1)

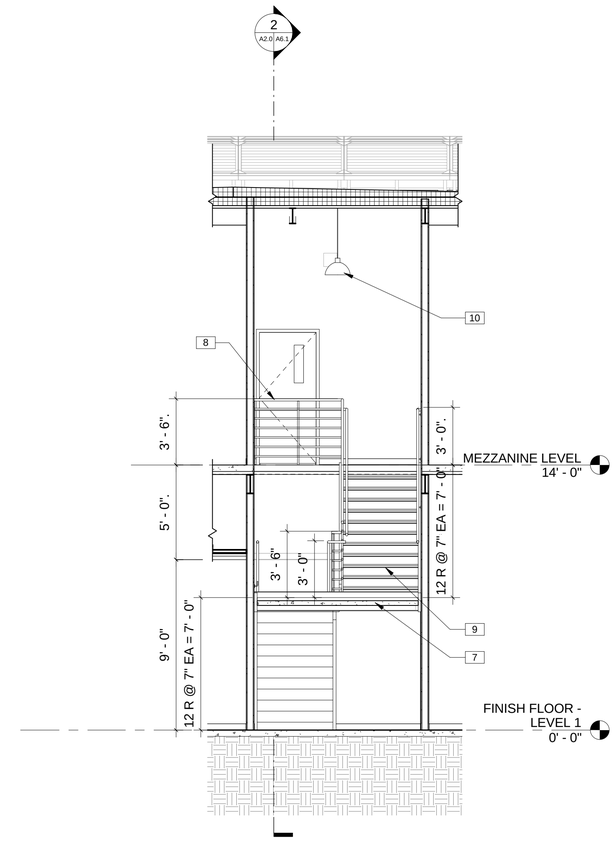

STAIR #2 AT MEZZANINE

SCALE: 1/4" = 1'-0" (1 / A9.1 A9.1)

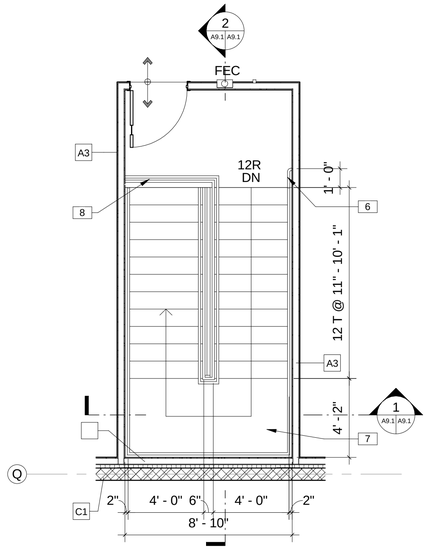

ENLARGED STAIR #2 AT MEZZANINE

SCALE: 1/4" = 1'-0" (4 / A2.5 A9.1)

KEYNOTES:

1. STAIR SIGNAGE - SEE DETAIL 7/A10.7
2. 3' - 0" HIGH WALL MOUNTED PAINTED STEEL HANDRAIL, SEE DETAIL 11/A10.7
3. ENTRY GRID SYSTEM - 18"X18"X3/4" REMOVABLE MODULAR S.S. OPEN GRID TILES IN RECESSED SLAB FLUSH WITH FLOOR FINISH, SEE SLAB PLAN FOR DIMENSIONS
4. HANDRAIL & GUARDRAIL TO EXTEND 1' - 11" BEYOND FACE OF LOWEST TREAD OF TREAD
5. STAIR - MOUNTED PAINTED STEEL 3' - 6" HIGH GUARDRAIL
6. HANDRAIL TO EXTEND 12" BEYOND FACE OF TREAD
7. CONCRETE FILLED LANDING
8. 42" HIGH METAL GUARDRAILL, SEE DETAIL 4/A10.8
9. STAIR NOSING, SEE DETAIL 6/A10.7
10. LED PENDANT LIGHT FIXTURE
11. SUSPENDED CEILING PER PLAN
12. 3/4" ENTRY MAT SLAB DEPRESSION

LEGEND

- X — WALL TYPE, SEE SHEET A6.6 & A6.7
- FLOOR TRANSITION, SEE SHEET FOR FINISH SCHEDULE

DEVELOPMENT ONE, INC.
1611 East Fourth Street, Suite 250
Santa Ana, California 92701
J. Bruce Camino, Architect, AIA, NCARB
(714) 689-0298
(714) 648-0197 FAX

REGISTERED ARCHITECT — JOHN BRUCE CAMINO — C23740 — Signature — 10/31/11 — RenewalDate — STATE OF CALIFORNIA

DATE	SYM	REVISION	BY	A'PD

NATIONAL AERONAUTICS AND SPACE ADMINISTRATION

DRYDEN FLIGHT RESEARCH CENTER
EDWARDS, CA

DRAWING TITLE

ENLARGED STAIR #2 PLAN AND SECTION

PROJECT TITLE

FACILITIES SUPPORT CENTER BUILDING
100% FINAL DESIGN SUBMITTAL

APPROVALS		DATE
Chief, Facilities Engineering Division, Office DAN CROWLEY		4/14/11
Project Requestor /Customer DAN CROWLEY		4/14/11
Facilities Project Manager GEMMA FLORES		4/14/11
Chief, Office of Protective Services JOHN ZELLMER		4/14/11
Chief - Safety, Health, and Environmental Office DAN MULLEN		4/14/11
DFRC Chief Information Officer KEN NORLIN		4/14/11

DATE STRTD	11/08/10	DATE PRNTD	03/24/11
DRAWN BY		EDM-1703	
SCALE	AS NOTED	TRADE SH. No.	
FILE NAME		A9.1	SHEET No. 72 of 193

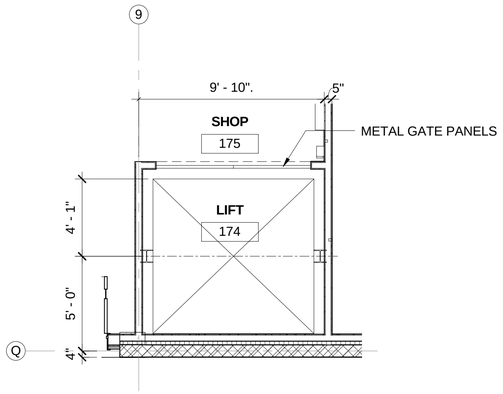

ENLARGED LIFT PLAN

SCALE: 1/4" = 1'-0" (2 / A2.4 A9.2)

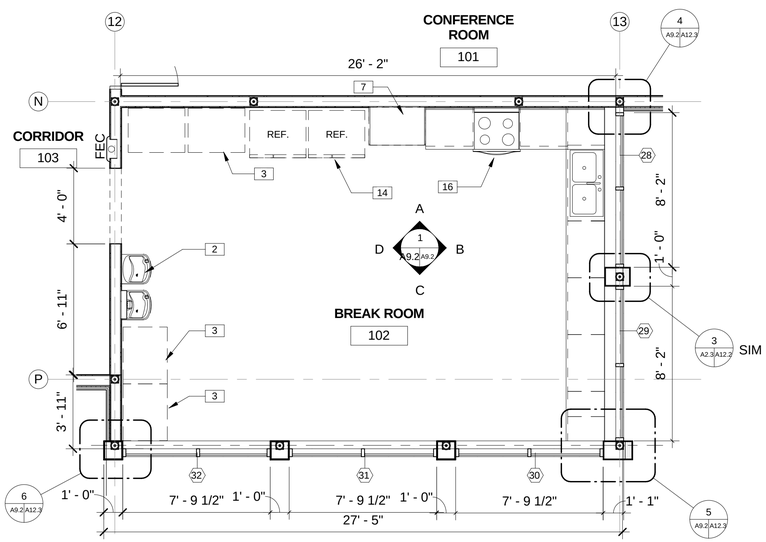

ENLARGED BRAKE ROOM PLAN

SCALE: 1/4" = 1'-0" (3 / A2.4 A9.2)

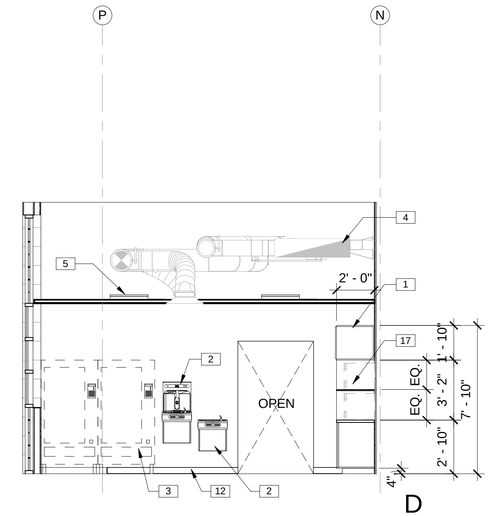

D

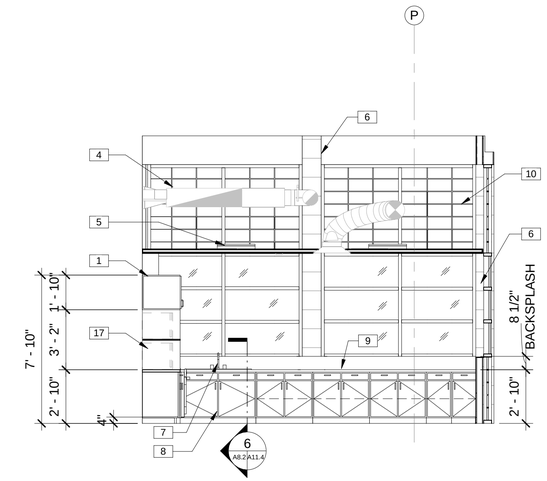

B

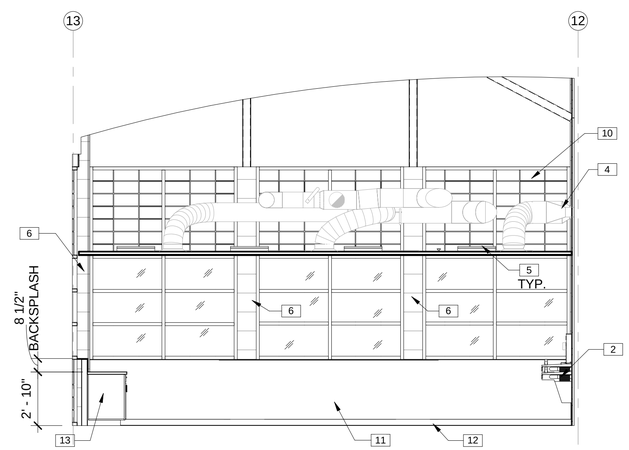

C

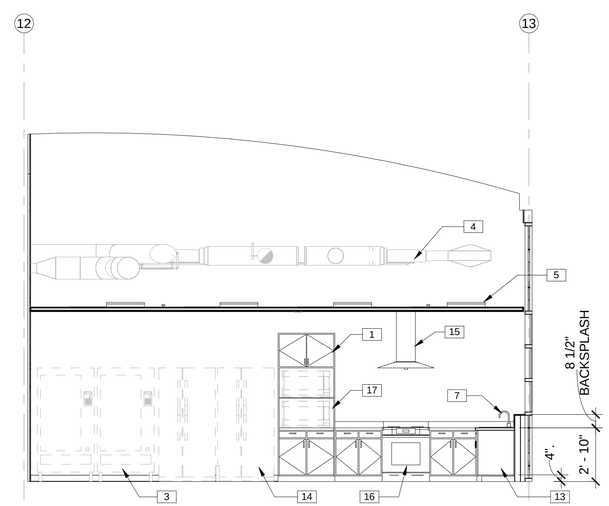

A

BREAK ROOM INTERIOR ELEVATIONS

SCALE: 1/4" = 1'-0" (1 / A9.2 A9.2)

INTERIOR ELEVATION KEYNOTES:

1. WALL HUNG CABINET, FINISH SURFACE PER SCHEDULE, SEE DETAIL 3/A11.4
2. DRINKING FOUNTAIN, ADA-COMPLIANT
3. VENDING MACHINE PROVIDED BY OWNER (N.I.C.)
4. MECHANICAL DUCT PER MECHANICAL PLANS
5. LIGHTING FIXTURES, SEE REFLECTED CEILING PLAN AND ELECTRICAL PLANS
6. 10-GA. FINISH METAL ENCLOSURE, SEE DETAILS ON SHEET A12.2
7. COUNTERTOP SINK, SEE PLUMBING PLANS
8. ACCESSIBLE BASE CABINET, FINISH SURFACE PER FINISH SCHEDULE, SEE DETAILS 1/A11.4 & 6/A11.4
9. COUNTERTOP FINISH SURFACE PER FINISH SCHEDULE
10. WINDOW SYSTEM BEYOND
11. PAINTED GYP. BOARD WALL PER PLAN
12. 4" RUBBER BASE SEE FINISH SCHEDULE
13. BASE CABINET, SEE DETAIL 3/A11.4
14. REFRIGERATOR PROVIDED BY OWNER (N.I.C.)
15. STAINLESS STEEL RANGE HOOD - 200 CFM, SEE MECHANICAL PLANS
16. STAINLESS STEEL RANGE BY OWNER (N.I.C.)
17. BUILT-IN MICROWAVE PROVIDED BY OWNER (N.I.C.)

LICENSED ARCHITECT J. BRUCE CAMPBELL C23740 Signature 10/31/11 RenewalDate STATE OF CALIFORNIA

DEVELOPMENT ONE, INC.
1611 East Fourth Street, Suite 250
Santa Ana, California 92701
J. Bruce Camino, Architect, AIA, NCARB
(714) 689-0298
(714) 648-0197 FAX

DATE	SYM	REVISION	BY	A'PD

NATIONAL AERONAUTICS AND SPACE ADMINISTRATION

DRYDEN FLIGHT RESEARCH CENTER
EDWARDS, CA

DRAWING TITLE

ENLARGED LIFT PLAN AND SECTION

PROJECT TITLE

FACILITIES SUPPORT CENTER BUILDING
100% FINAL DESIGN SUBMITTAL

APPROVALS	DATE
Chief, Facilities Engineering Assoc. Office DAN CROWLEY	4/14/11
Project Requestor /Customer DAN CROWLEY	4/14/11
Facilities Project Manager GEMMA FLORES	4/14/11
Chief, Office of Protective Services JOHN ZELLMER	4/14/11
Chief - Safety, Health, and Environmental Office DAN MULLEN	4/14/11
DFRC Chief Information Officer KEN NORLIN	4/14/11

DATE STRTD	11/08/10	DATE PRNTD	03/14/11
DRAWN BY		EDM-1703	
SCALE	AS NOTED	TRADE SH. No.	
FILE NAME		A9.2	SHEET No. 73 of 193

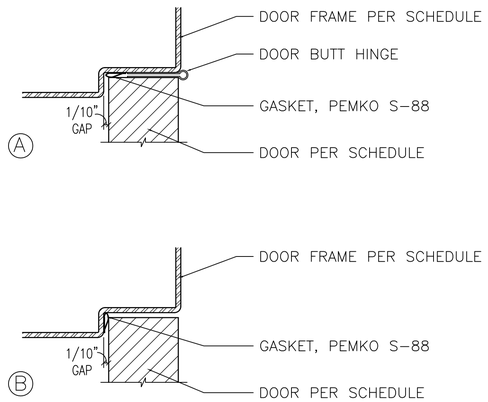

ACOUSTIC DOOR GASKET

SCALE: N.T.S. | 11 | A7.0 | A10.0

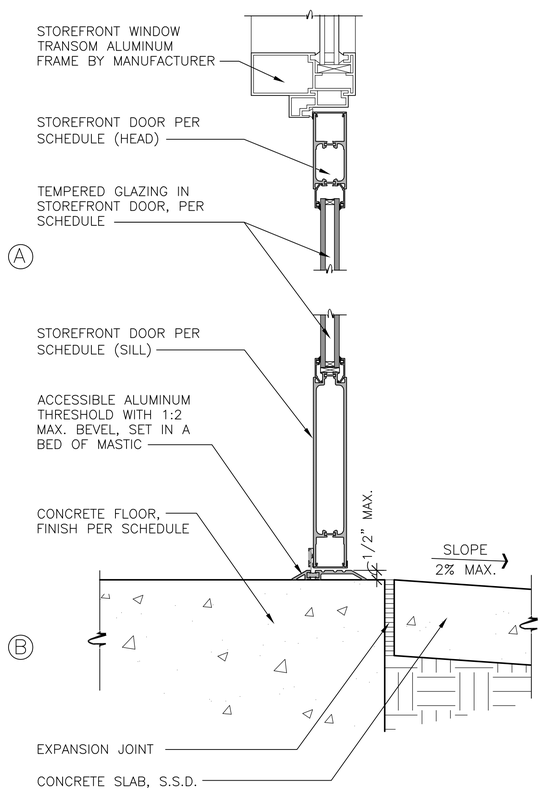

STOREFRONT DOOR

SCALE: 3"=1'-0" | 12 | A7.0 | A10.0

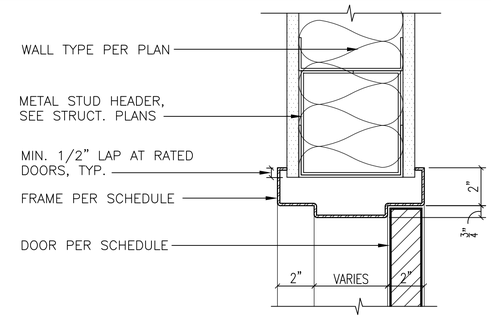

INT. DOOR HEAD

SCALE: 3"=1'-0" | 7 | A7.0 | A10.0

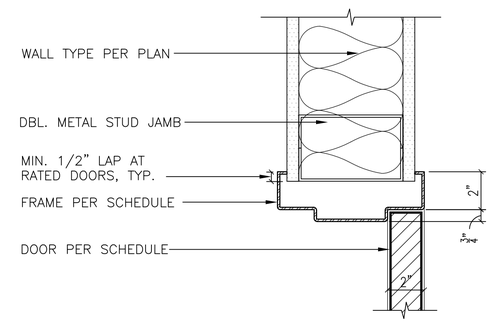

INT. DOOR JAMB

SCALE: 3"=1'-0" | 8 | A7.0 | A10.0

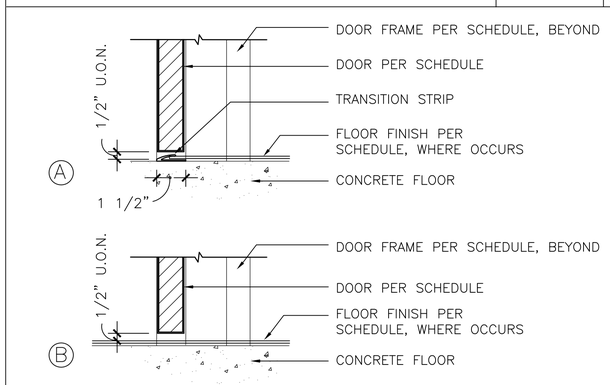

INTERIOR THRESHOLD

SCALE: 3"=1'-0" | 9 | A7.0 | A10.0

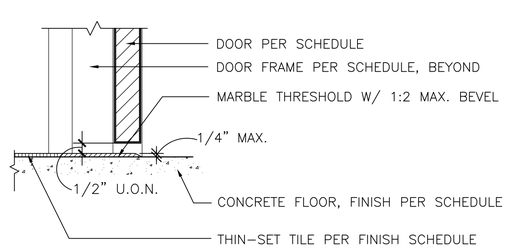

INTERIOR THRESHOLD

SCALE: 3"=1'-0" | 10 | A7.0 | A10.0

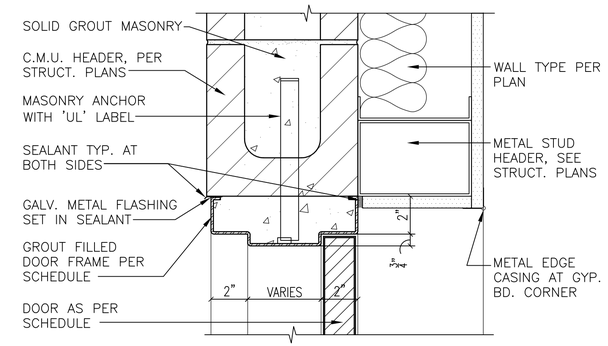

DOOR HEAD

SCALE: 3"=1'-0" | 4 | A7.0 | A10.0

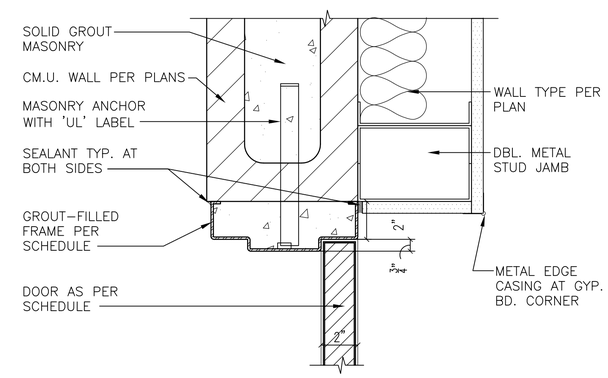

DOOR JAMB

SCALE: 3"=1'-0" | 5 | A7.0 | A10.0

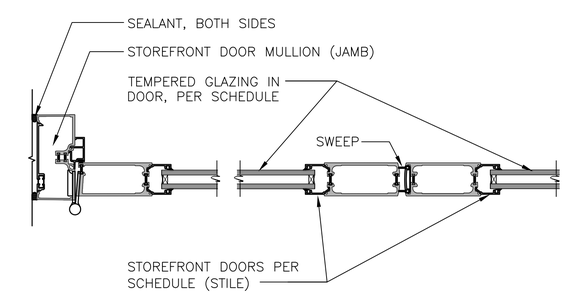

STOREFRONT DOOR

SCALE: 1 1/2"=1'-0" | 6 | A7.0 | A10.0

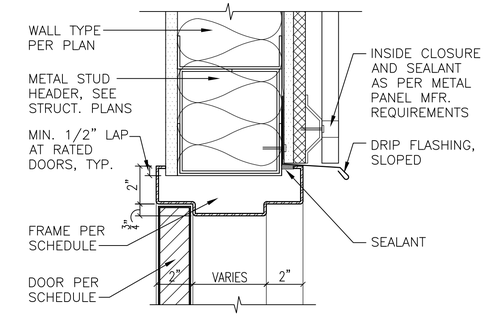

DOOR HEAD

SCALE: 3"=1'-0" | 1 | A7.0 | A10.0

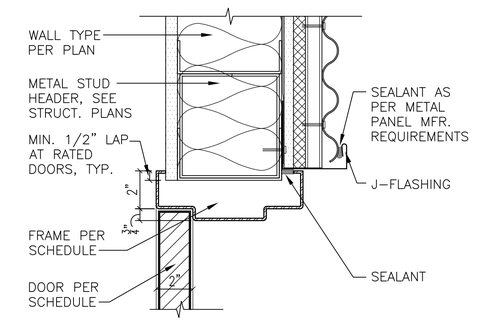

DOOR JAMB

SCALE: 3"=1'-0" | 2 | A7.0 | A10.0

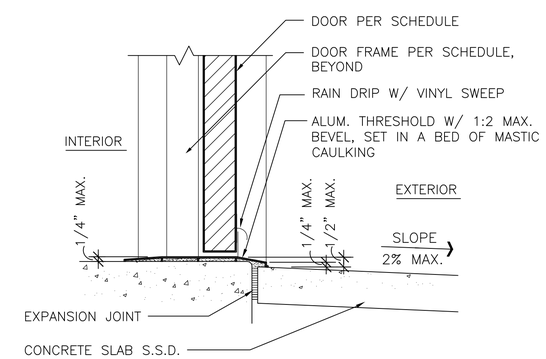

EXTERIOR THRESHOLD

SCALE: 3"=1'-0" | 3 | A7.0 | A10.0

LICENSED ARCHITECT
JOHN BRUCE CAMINO
C23740
Signature
10/31/11
Renewal Date
STATE OF CALIFORNIA

DEVELOPMENT ONE, INC.
1611 East Fourth Street, Suite 250
Santa Ana, California 92701
J.Bruce Camino, Architect, AIA, NCARB
(714) 689-0298
(714) 648-0197 FAX

DATE	SYM	REVISION	BY	A'PD

NATIONAL AERONAUTICS AND SPACE ADMINISTRATION
DRYDEN FLIGHT RESEARCH CENTER
EDWARDS, CA

DRAWING TITLE
DOOR DETAILS

PROJECT TITLE
FACILITIES SUPPORT CENTER BUILDING
100% FINAL DESIGN SUBMITTAL

APPROVALS		DATE
Chief, Facilities Engineering & Asset Mgt. Office DAN CROWLEY	Daniel J. Crowley	4/14/11
Project Requestor/Customer DAN CROWLEY	Daniel J. Crowley	4/14/11
Facilities Project Manager GEMMA FLORES	Gemma Flores	4/14/11
Chief, Office of Protective Services JOHN ZELLMER	[illegible]	4/14/11
Chief – Safety, Health and Environmental Office DAN MULLEN	Daniel J. Mullen	4/14/11
DFRC Chief Information Officer KEN NORLIN	[illegible]	4/14/11

DATE STRTD	11/04/10	DATE PRNTD	03/14/11
DRAWN BY		EDM-1703	
SCALE	AS NOTED	TRADE SH. No.	
FILE NAME		A10.0	SHEET No. 74 of 193

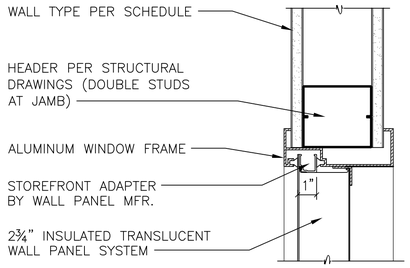

SIDELIGHT HEAD (JAMB SIM.)

SCALE: 3"=1'-0" | 11 | A7.0 | A10.1

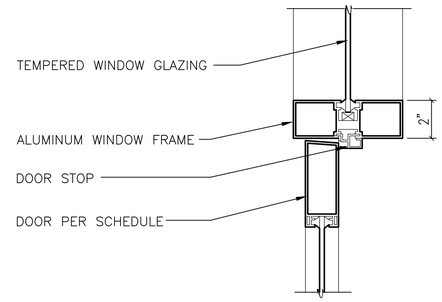

DOOR TO SIDELIGHT MULLION

SCALE: 3"=1'-0" | 7 | A7.0 | A10.1

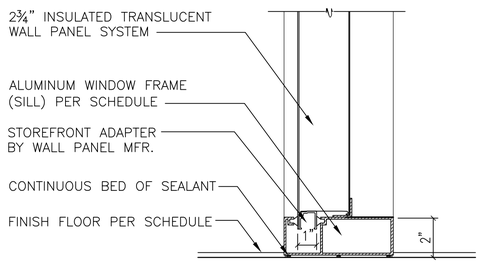

SIDELIGHT SILL

SCALE: 3"=1'-0" | 12 | A7.0 | A10.1

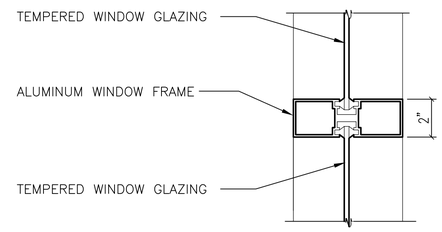

SIDELIGHT MULLION

SCALE: 3"=1'-0" | 8 | A7.0 | A10.1

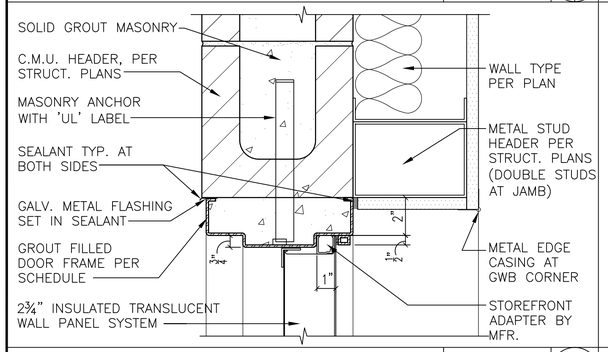

WINDOW HEAD (JAMB SIM.)

SCALE: 3"=1'-0" | 13 | A7.0 | A10.1

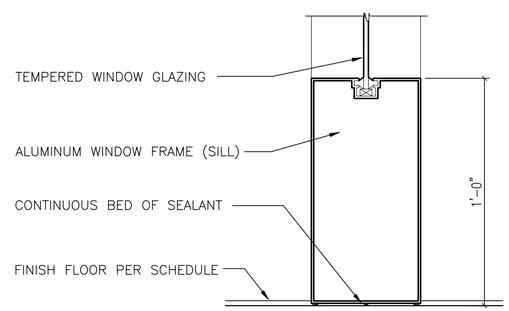

SIDELIGHT SILL

SCALE: 3"=1'-0" | 9 | A7.0 | A10.1

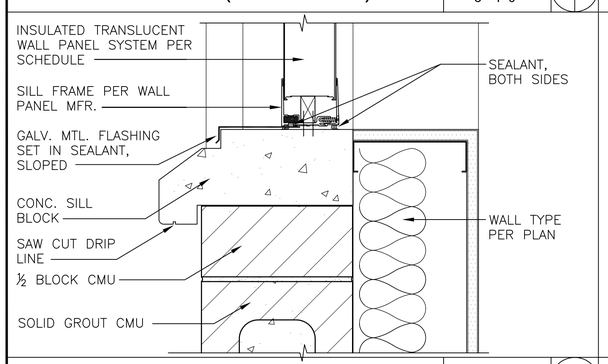

WINDOW SILL

SCALE: N.T.S. | 14 | A7.0 | A10.1

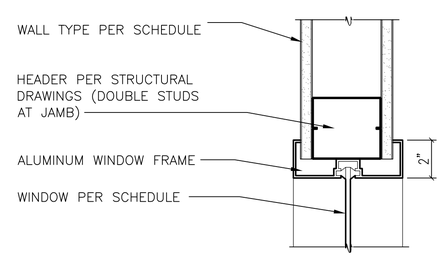

SIDELIGHT HEAD (JAMB SIM.)

SCALE: 3"=1'-0" | 10 | A7.0 | A10.1

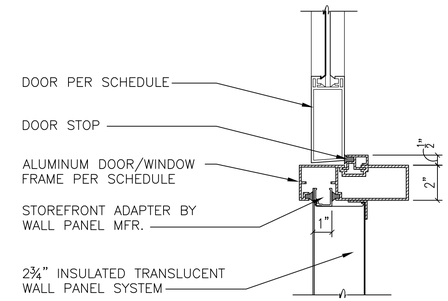

DOOR TO SIDELIGHT MULLION

SCALE: 3"=1'-0" | 4 | A7.0 | A10.1

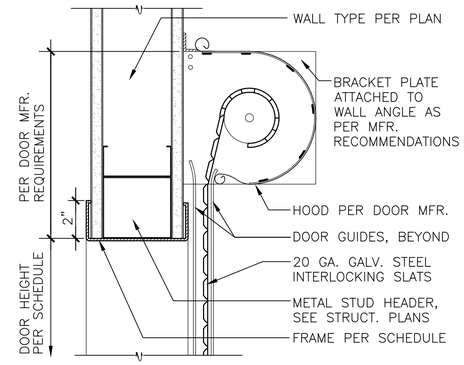

ROLL-UP DOOR HEAD

SCALE: 3"=1'-0" | 1 | A7.0 | A10.1

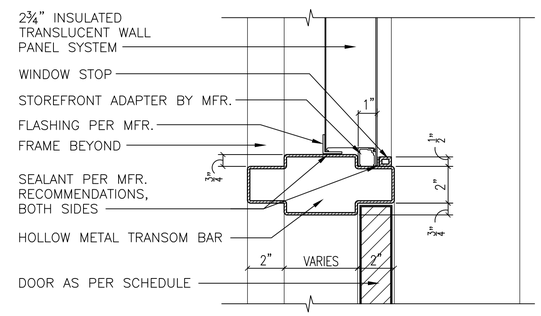

DOOR TO TRANSOM MULLION

SCALE: 1 1/2"=1'-0" | 5 | A7.0 | A10.1

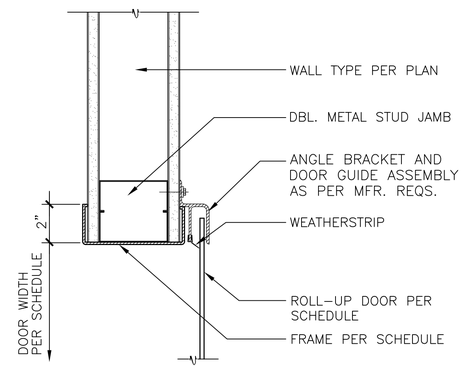

ROLL-UP DOOR JAMB

SCALE: 3"=1'-0" | 2 | A7.0 | A10.1

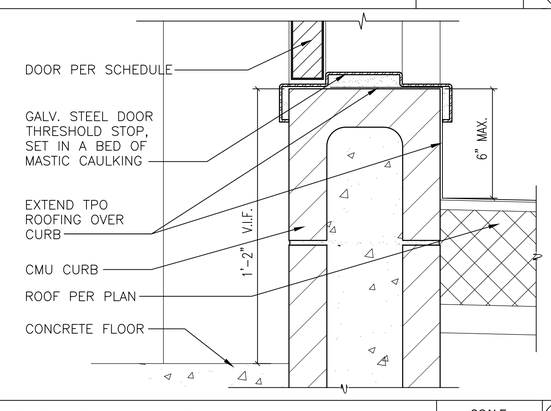

DOOR SILL AT CURB

SCALE: 1 1/2"=1'-0" | 6 | A7.0 | A10.1

SCALE: | 3 | A7.0 | A10.1

LICENSED ARCHITECT
JOHN BRUCE CAMINO
C23740
Signature
10/31/11
Renewal Date
STATE OF CALIFORNIA

DEVELOPMENT ONE, INC.
1611 East Fourth Street, Suite 250
Santa Ana, California 92701
J.Bruce Camino, Architect, AIA, NCARB
(714) 689-0298
(714) 648-0197 FAX

DATE	SYM	REVISION	BY	A'PD

NATIONAL AERONAUTICS AND SPACE ADMINISTRATION
DRYDEN FLIGHT RESEARCH CENTER
EDWARDS, CA

DRAWING TITLE
DOOR DETAILS

PROJECT TITLE
FACILITIES SUPPORT CENTER BUILDING
100% FINAL DESIGN SUBMITTAL

APPROVALS	DATE
Chief, Facilities Engineering & Asset Mgt. Office DAN CROWLEY	4/14/11
Project Requestor/Customer DAN CROWLEY	4/14/11
Facilities Project Manager GEMMA FLORES	4/14/11
Chief, Office of Protective Services JOHN ZELLMER	4/14/11
Chief – Safety, Health and Environmental Office DAN MULLEN	4/14/11
DFRC Chief Information Officer KEN NORLIN	4/14/11

DATE STRTD	11/04/10	DATE PRNTD	03/14/11
DRAWN BY		EDM–1703	
SCALE	AS NOTED	TRADE SH. No.	
FILE NAME		A10.1	SHEET No. 75 of 193

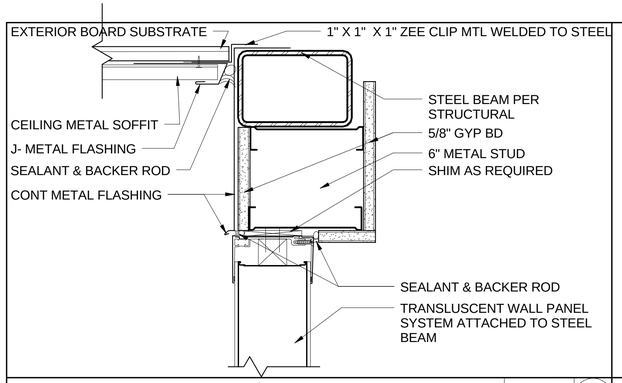

WINDOW HEAD DETAIL — SCALE: 3" = 1'-0" — 11 (A12.0 / A10.2)

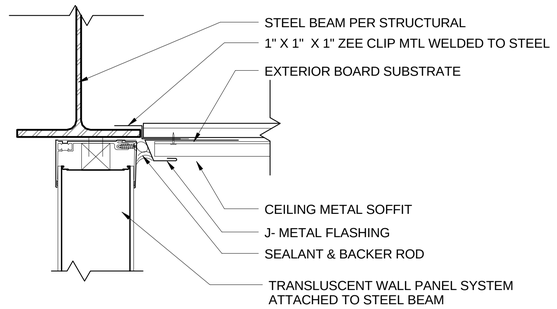

WINDOW HEAD @ STEEL — SCALE: 3" = 1'-0" — 7 (A6.6 / A10.2)

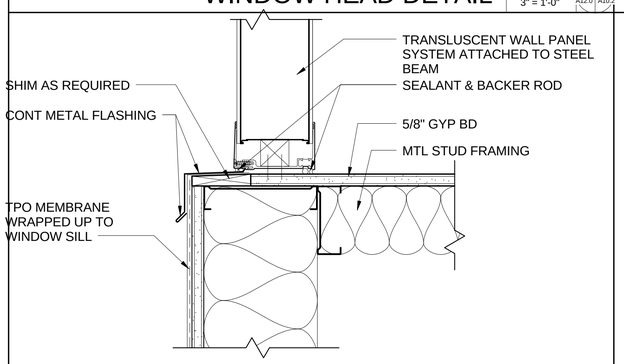

WINDOW SILL DETAIL — SCALE: 3" = 1'-0" — 12 (A12.0 / A10.2)

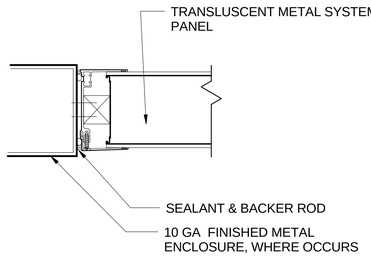

WINDOW JAMB @ MTL ENCLOSURE — SCALE: 3" = 1'-0" — 8 (A6.6 / A10.2)

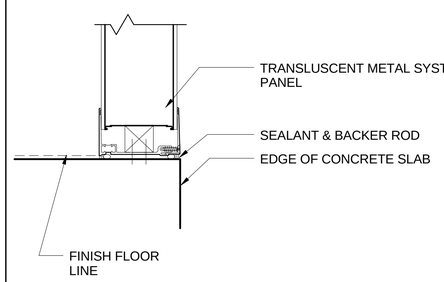

WINDOW SILL @ CONC FLOOR FIN — SCALE: 3" = 1'-0" — 9 (A6.6 / A10.2)

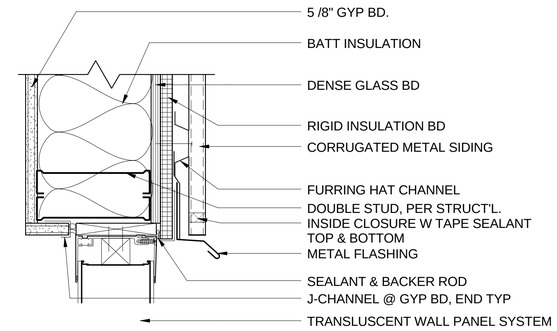

HEAD DTL @ MTL WALL CORR. SIDING — SCALE: 3" = 1'-0" — 4 (A12.0 / A10.2)

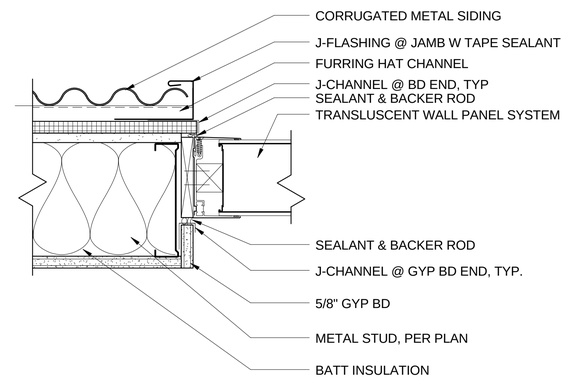

JAMB DTL @ MTL WALL CORR. SIDING — SCALE: 3" = 1'-0" — 5 (A10.2)

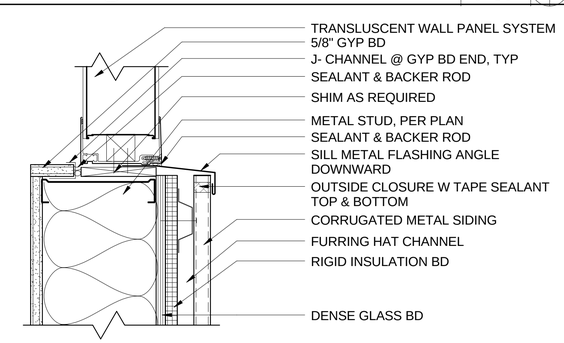

SILL DTL @ MTL WALL CORR. SIDING — SCALE: 3" = 1'-0" — 6 (A10.2)

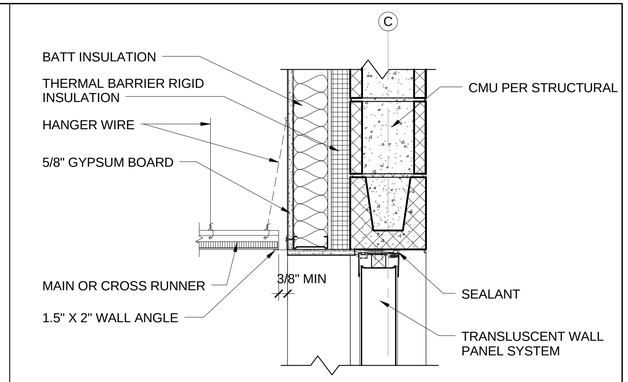

WINDOW HEAD DETAIL @ CMU — SCALE: 1 1/2" = 1'-0" — 1 (A6.7 / A10.2)

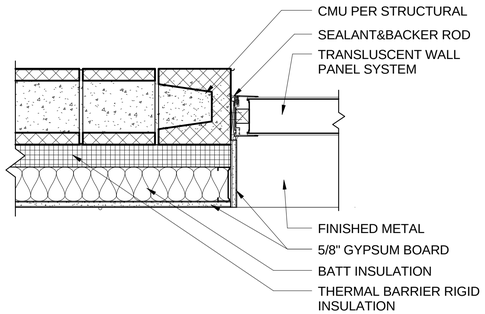

WINDOW JAMB DETAIL @ CMU — SCALE: 1 1/2" = 1'-0" — 2 (A10.2)

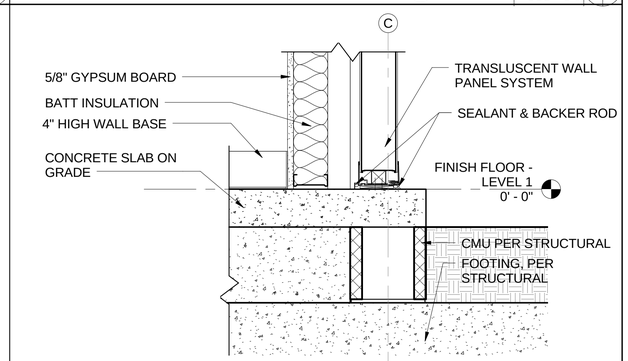

WINDOW SILL DETAIL — SCALE: 1 1/2" = 1'-0" — 3 (A6.7 / A10.2)

LICENSED ARCHITECT
J. BRUCE CAMINO
C23740
Signature
10/31/11
RenewalDate
STATE OF CALIFORNIA

DEVELOPMENT ONE, INC.
1611 East Fourth Street, Suite 250
Santa Ana, California 92701
J. Bruce Camino, Architect, AIA, NCARB
(714) 689-0298
(714) 648-0197 FAX

DATE	SYM	REVISION	BY	A'PD

NATIONAL AERONAUTICS AND SPACE ADMINISTRATION

DRYDEN FLIGHT RESEARCH CENTER
EDWARDS, CA

DRAWING TITLE

WINDOW DETAILS

PROJECT TITLE

FACILITIES SUPPORT CENTER BUILDING
100% FINAL DESIGN SUBMITTAL

APPROVALS	DATE
Chief, Facilities Engineering Branch, Office of Center Operations — DAN CROWLEY	4/14/11
Project Requestor /Customer — DAN CROWLEY	4/14/11
Facilities Project Manager — GEMMA FLORES	4/14/11
Chief, Office of Protective Services — JOHN ZELLMER	4/14/11
Chief - Safety, Health, and Environmental Office — DAN MULLEN	4/14/11
DFRC Chief Information Officer — KEN NORLIN	4/14/11

DATE STRTD	03/08/11	DATE PRNTD	03/14/11
DRAWN BY		EDM-1703	
SCALE	AS NOTED	TRADE SH. No.	
FILE NAME		A10.2	SHEET No. 76 of 193

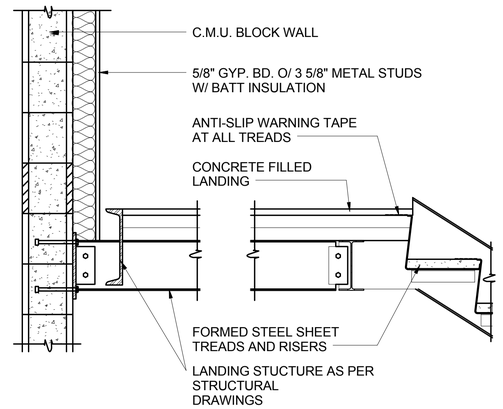

STAIR-LANDING SECTION

SCALE: 1" = 1'-0" | 5 | A10.3

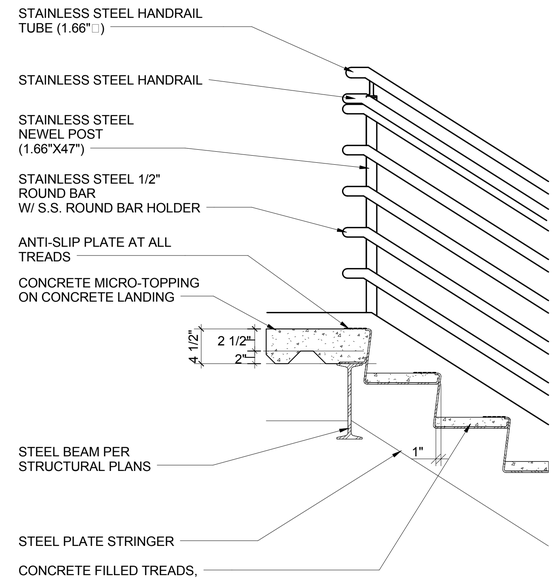

SECTION @ UPPER LANDING

SCALE: 1" = 1'-0" | 3 | A9.0 | A10.3

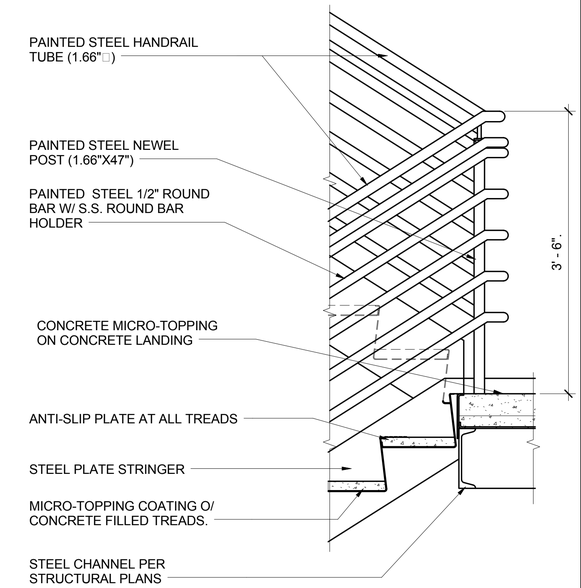

SECTION @ MIDDLE LANDING

SCALE: 1" = 1'-0" | 1 | A9.0 | A10.3

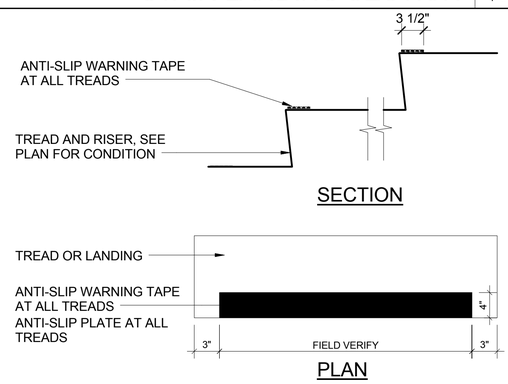

STAIR NOSING

SCALE: 1" = 1'-0" | 6 | A10.3

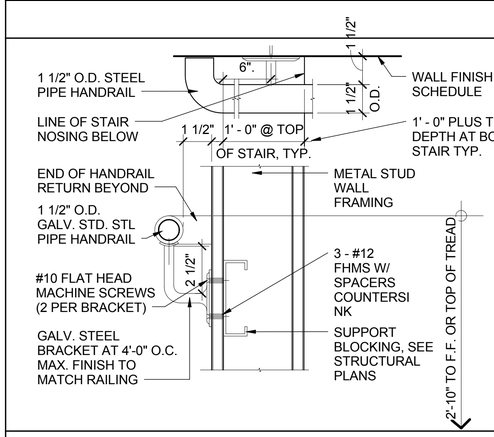

HANDRAIL WALL

SCALE: 3" = 1'-0" | 11 | A6.6 | A10.3

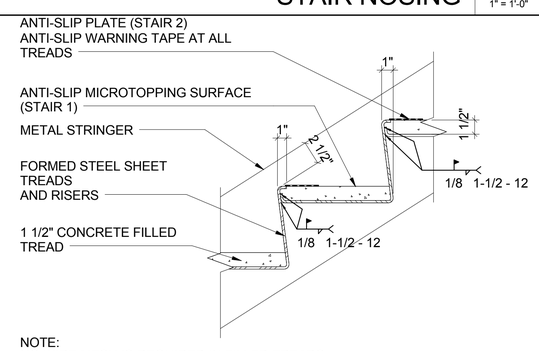

NOTE:
NO WIRE MESH IS REQUIRED IN FILLED TREADS OR LANDINGS AS LONG AS THE CONCRETE USED HAS A MINIMUM DESIGN STRENGTH OF 3000 PSI

STAIR TREADS

SCALE: 1 1/2" = 1'-0" | 7 | A9.0 | A10.3

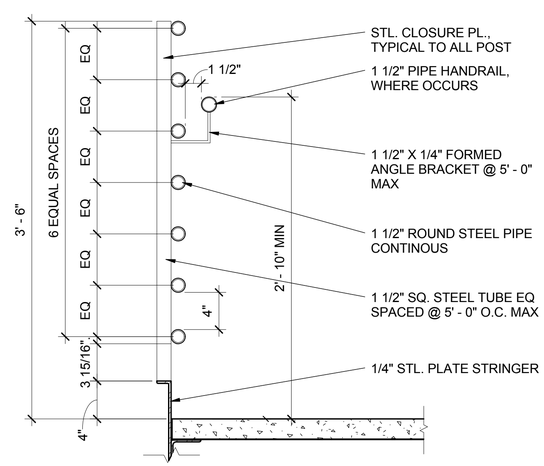

ROUND RAIL SECTION DETAIL

SCALE: 1 1/2" = 1'-0" | 4 | A10.3

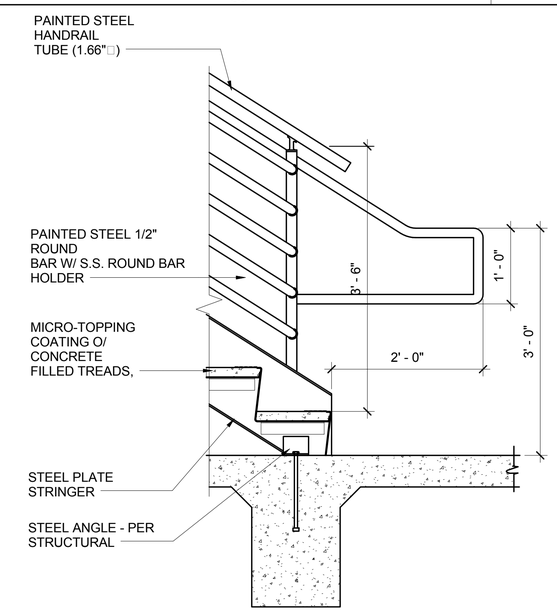

SECTION @ BOTTOM LANDING

SCALE: 1" = 1'-0" | 2 | A9.1 | A10.3

NOTE:
THE INFORMATION ON THE SIGN MUST BE PRESENTED WITH RAISED ARABIC NUMERALS AND CORRESPONDING GRADE II BRAILLE. THE MEZZANINE LEVELS SHALL HAVE THE LETTER "M" PRECEDING FLOOR NUMBER. BASEMENT LEVELS SHALL HAVE THE LETTER "B" PRECEDING THE FLOOR NUMBER.

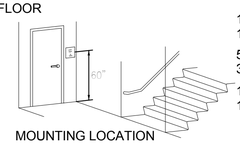

MOUNTING LOCATION

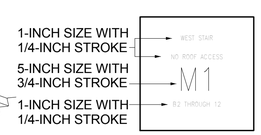

CORRESPONDING GRADE II BRAILLE TO BE LOCATED DIRECTLY UNDER OR ADJACENT TO SIGNAGE INFORMATION

STAIR SIGNAGE

SCALE: 1 1/2" = 1'-0" | 8 | A10.3

REGISTERED ARCHITECT
J. BRUCE CAMINO
C23740
Signature
10/31/11
RenewalDate
STATE OF CALIFORNIA

DEVELOPMENT ONE, INC.
1611 East Fourth Street, Suite 250
Santa Ana, California 92701
J. Bruce Camino, Architect, AIA, NCARB
(714) 889-0298
(714) 648-0197 FAX

DATE	SYM	REVISION	BY	A'PD

NATIONAL AERONAUTICS AND SPACE ADMINISTRATION

DRYDEN FLIGHT RESEARCH CENTER
EDWARDS, CA

DRAWING TITLE

STAIR DETAILS

PROJECT TITLE

FACILITIES SUPPORT CENTER BUILDING
100% FINAL DESIGN SUBMITTAL

APPROVALS	DATE
Chief, Facilities Engineering Assist Mgmt Office DAN CROWLEY	4/14/11
Project Requestor /Custom DAN CROWLEY	4/14/11
Facilities Project Manager GEMMA FLORES	4/14/11
Chief, Office of Protective Services JOHN ZELLMER	4/14/11
Chief - Safety, Health, and Environmental Office DAN MULLEN	4/14/11
DFRC Chief Information Officer KEN NORLIN	4/14/11

DATE STRTD	11/09/10	DATE PRNTD	03/14/11
DRAWN BY		EDM-1703	
SCALE	AS NOTED	TRADE SH. No.	
FILE NAME		A10.3	SHEET No. 77 of 193

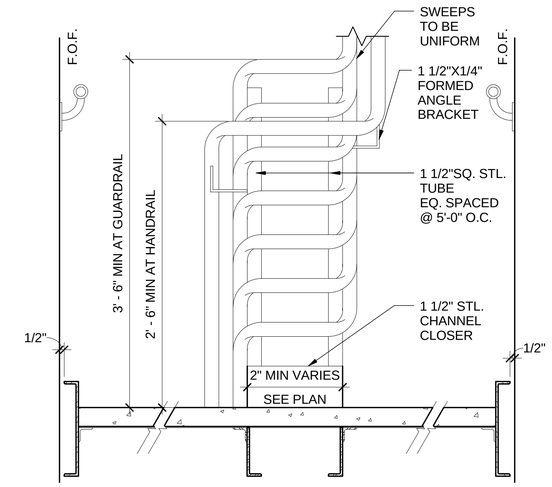

RAIL INSIDE RAILING TRANS-ELEV

SCALE: 1 1/2" = 1'-0" | 2 | A9.0 A9.1 | A10.4

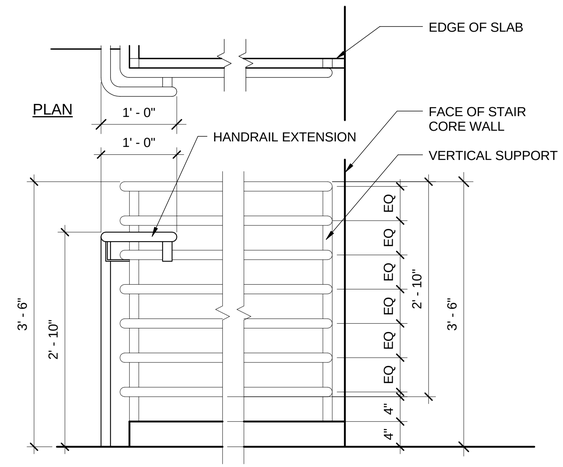

GUARDRAIL @ MEZZ LEVEL

SCALE: 1" = 1'-0" | 4 | A9.0 A9.1 | A10.4

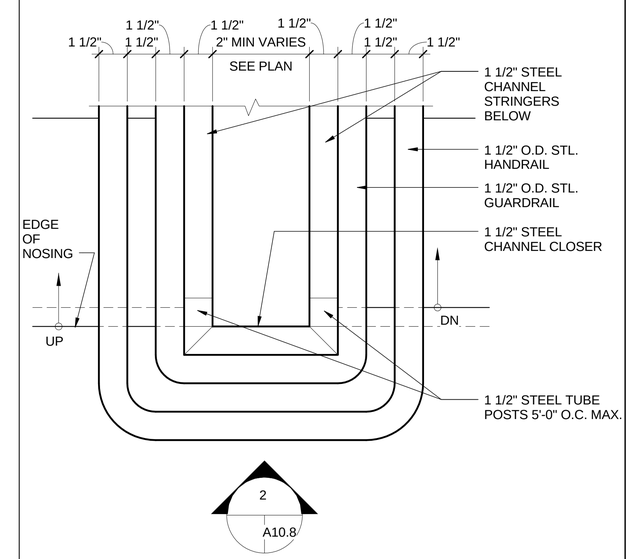

RAIL INSIDE RAILING TRANS - PLAN

SCALE: 3" = 1'-0" | 1 | A9.0 A9.1 | A10.4

DEVELOPMENT ONE, INC.
1611 East Fourth Street, Suite 250
Santa Ana, California 92701
J. Bruce Camino, Architect, AIA, NCARB
(714) 689-0298
(714) 648-0197 FAX

DATE	SYM	REVISION	BY	A'PD

NATIONAL AERONAUTICS AND SPACE ADMINISTRATION

DRYDEN FLIGHT RESEARCH CENTER
EDWARDS, CA

DRAWING TITLE

STAIR DETAILS

PROJECT TITLE

FACILITIES SUPPORT CENTER BUILDING
100% FINAL DESIGN SUBMITTAL

APPROVALS	DATE
Chief, Facilities Engineering & Assist Mgmt. Office DAN CROWLEY	4/14/11
Project Requestor /Customer DAN CROWLEY	4/14/11
Facilities Project Manager GEMMA FLORES	4/14/11
Chief, Office of Protective Services JOHN ZELLMER	4/14/11
Chief - Safety, Health, and Environmental Office DAN MULLEN	4/14/11
DFRC Chief Information Officer KEN NORLIN	4/14/11

DATE STRTD	11/09/10	DATE PRNTD	03/14/11
DRAWN BY		EDM-1703	
SCALE	AS NOTED	TRADE SH. No.	
FILE NAME		A10.4	SHEET No. 78 of 193

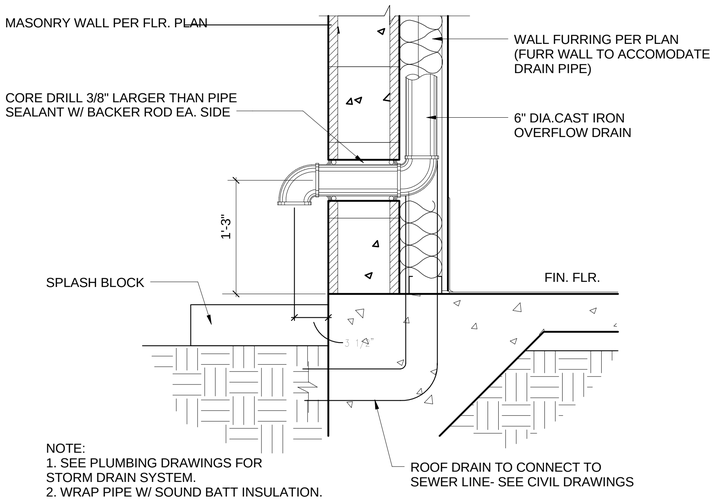

NOTE:
1. SEE PLUMBING DRAWINGS FOR STORM DRAIN SYSTEM.
2. WRAP PIPE W/ SOUND BATT INSULATION.

ROOF DRAIN/ OVERFLOW AT WALL BASE

SCALE: 1 1/2" = 1'-0" | 5 | A4.0 | A11.0

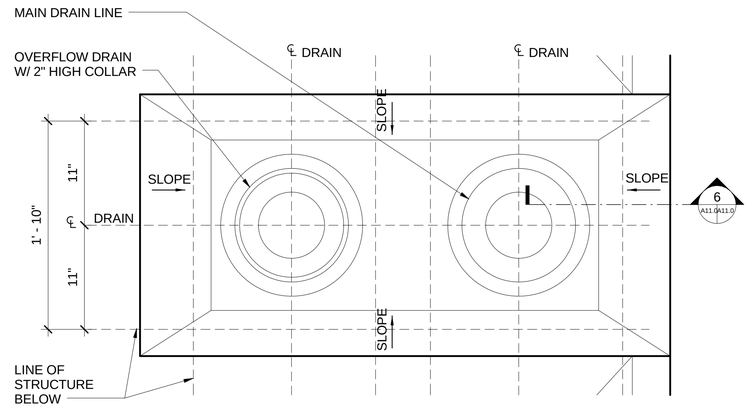

ROOF DRAIN PLAN

SCALE: 1 1/2" = 1'-0" | 3 | A4.0 | A11.0

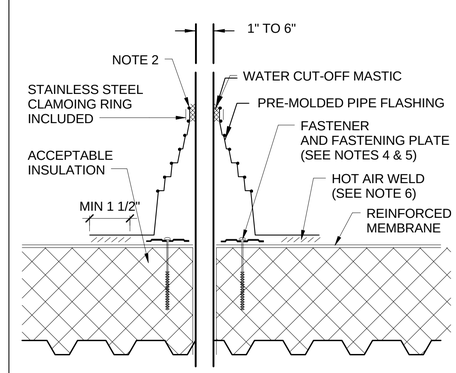

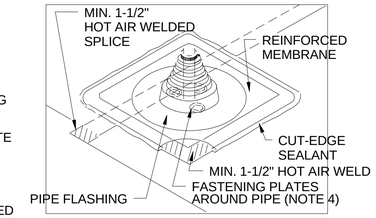

NOTES:

1. REMOVE ALL LEAD AND OTHER FLASHING.
2. TEMPERATURE OF PIPE MUST NOT EXCEED 120° F
3. PIPE SEAL MUST HAVE INTACT RIB AT TOP EDGE, REGARDLESS OF PIPE DIAMETER
4. INSTALL 3 FASTENERS AND PLATES AROUND PIPE EQUALLY SPACED. FASTENER MAY ALSO BE POSITIONED MAXIMUM 12" FROM PIPE, FASTENED 12" ON CENTER AND FLASHED WITH REINFORCED MEMBRANE
5. IF PLATES CANNOT BE INSTALLED AS SHOWN THEY CAN BE POSITIONED OUTSIDE THE PIPE FLASHING FLANGE
6. PIPE FLASHING DECK FLANGE MUST BE HOT AIR WELDED A MINIMUM OF 1 1/2" BEYOND FASTENING PLATES.
7. INSTALL A SECTION OF REINFORCED MEMBRANE OVER SPLICE INTERSECTIONS PRIOR TO INSTALLING PRE-MOLDED PIPE FLASHING.

PIPE PENETRATION

SCALE: 12" = 1'-0" | 1 | A4.0 | A11.0

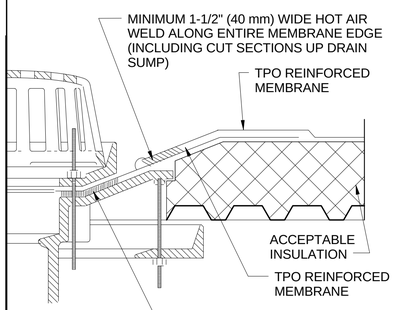

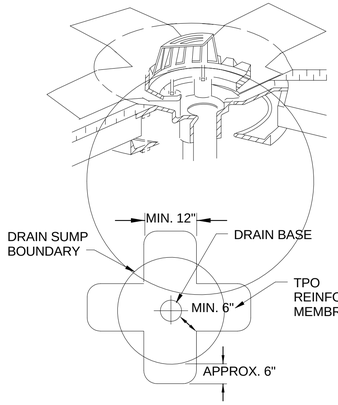

NOTES:

1. REMOVE ALL LEAD AND OTHER FLASHING.
2. ALL DRAIN BOLTS OR CLAMPS MUST BE IN PLACE TO PROVIDE COMPRESSION ON WATER CUT-OFF MASTIC.
3. CUT MEMBRANE SO IT EXTENDS A MINIMUM OF 1/2" FROM ATTACHMENT POINTS OF THE CLAMPING RING.
4. APPROXIMATELY 1/8" DIAMETER BEAD OF CUT-EDGE SEALANT IS REQUIRED ON CUT EDGES OF REINFORCED MEMBRANE.

1. CUT SECTION OF TPO REINFORCED MEMBRANE AS SHOWN AND POSITION INTO DRAIN SUMP. EXTEND MEMBRANE OUT OF DRAIN SUMP APPROXIMATELY 6" (ROUND CORNERS)
2. SEE PLUMBING AND CIVIL DRAWINGS FOR CONNECTION TO STORM DRAIN SYSTEM

ROOF DRAIN - PARTIAL SECTION

SCALE: 12" = 1'-0" | 6 | A11.0 | A11.0

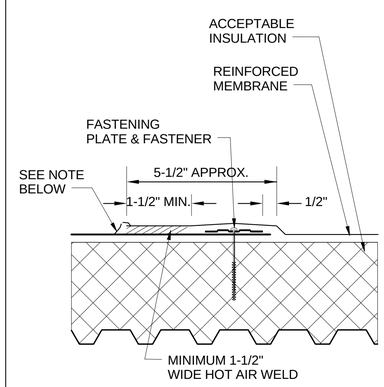

NOTE:
APPROXIMATELY 1/8" DIAMETER BEAD OF CUT-EDGE SEALANT IS REQUIRED ON CUT EDGES OF REINFORCED MEMBRANE

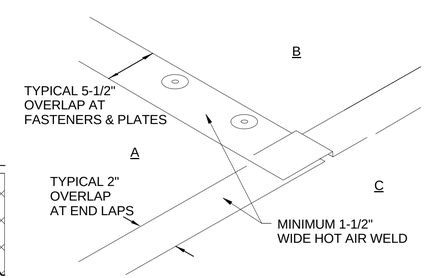

NOTE:
POSITION SHEETS AND HOT AIR WELD THE .060 INCH THICK
MEMBRANE A MINIMUM OF 1-1/2 INCHES.

MEMBRANE SPLICE

SCALE: 12" = 1'-0" | 4 | A4.0 | A11.0

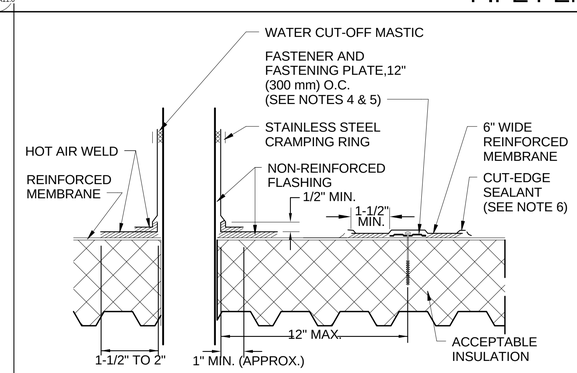

APPLY HEAT TO FLASHING AND FORM BY HAND PRIOR TO HOT AIR WELDING

NOTES:

1. REMOVE ALL LEAD AND OTHER FLASHING BEFORE INSTALLING FIELD FABRICATED PIPE SEAL.
2. TEMPERATURE OF PIPE MUST NOT EXCEED 120° F
3. NON-REINFORCED MEMBRANE WRAPPED AROUND PIPE SHALL HAVE MINIMUM 1-1/2" VERTICAL HOT AIR WELD.
4. INSTALL A MINIMUM OF 4 FASTENING PLATES AROUND PIPES WITH A DIAMETER UP TO 6". ADDITIONAL FASTENING PLATES WILL BE REQUIRED FOR PIPES GREATER THAN 6" IN DIAMETER AND SHALL BE SPACED 12" ON CENTER MAXIMUM.
5. REFER TO MANUFACTURER SPECIFICATIONS FOR PROPER FASTENERS AND PLATES.
6. APPROXIMATELY 1/8" DIAMETER BEAD OF CUT-EDGE SEALANT IS REQUIRED ON CUT EDGES OF REINFORCED MEMBRANE.

FIELD FABRICATION PENETRATION

SCALE: 12" = 1'-0" | 2 | A4.0 | A11.0

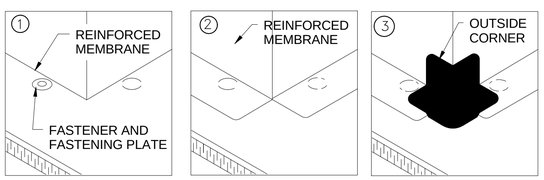

NOTES:

1. BEGIN INSTALLATION OF FASTENING PLATES APPROXIMATELY 6" FROM CORNER.
2. POSITION FASTENING PLATES 1/2" TO 1" FROM EDGE OF DECK MEMBRANE.
3. APPROXIMATELY 1/8" DIAMETER BEAD OF CUT-EDGE SEALANT IS REQUIRED ON CUT EDGES OF REINFORCED MEMBRANE.
4. REFER TO MANUFACTURER SPECIFICATIONS FOR ACCEPTABLE FASTENERS AND PLATES.

OUTSIDE CORNER

SCALE: 12" = 1'-0" | 7 | A11.0

REGISTERED ARCHITECT
J. BRUCE CAMPBELL
C23740
Signature
10/31/11
RenewalDate
STATE OF CALIFORNIA

DEVELOPMENT ONE, INC.
1611 East Fourth Street, Suite 250
Santa Ana, California 92701
J. Bruce Camino, Architect, AIA, NCARB
(714) 689-0298
(714) 648-0197 FAX

DATE	SYM	REVISION	BY	A'PD

NATIONAL AERONAUTICS AND SPACE ADMINISTRATION

DRYDEN FLIGHT RESEARCH CENTER
EDWARDS, CA

DRAWING TITLE

ROOF DETAILS

PROJECT TITLE

FACILITIES SUPPORT CENTER BUILDING
100% FINAL DESIGN SUBMITTAL

APPROVALS		DATE
Chief, Facilities Engineering Division/ Project Office DAN CROWLEY		4/14/11
Project Requestor /Customer DAN CROWLEY		4/14/11
Facilities Project Manager GEMMA FLORES		4/14/11
Chief, Office of Protective Services JOHN ZELLMER		4/14/11
Chief - Safety, Health, and Environmental Office DAN MULLEN		4/14/11
DFRC Chief Information Officer KEN NORLIN		4/14/11

DATE STRTD	11/10/10	DATE PRNTD	03/14/11
DRAWN BY		EDM-1703	
SCALE	AS NOTED	TRADE SH. No.	
FILE NAME	A11.0	SHEET No. 79 of 193	

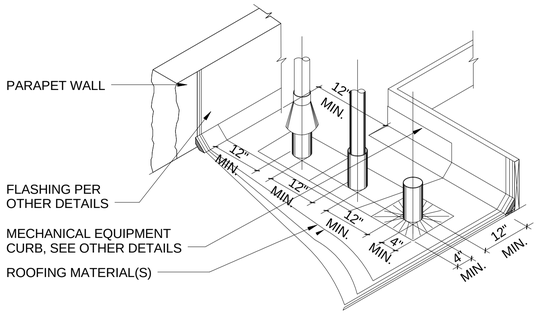

NOTE:
ITEMS IN THIS DETAIL ARE SHOWN FOR REFERENCE PURPOSES ONLY AND MAY NOT APPLY/OCCUR TO A SPECIFIC CONDITION OF THIS PROJECT, SEE OTHER DETAILS IN THIS SET FOR CLARIFICATION

PENETRATIONS

SCALE: 3" = 1'-0" | 6 | A4.0 | A11.1

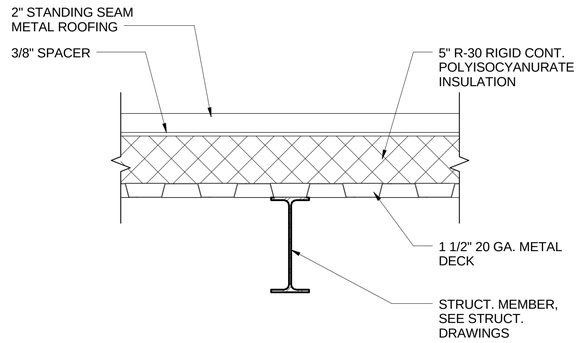

METAL STANDING SEAM ROOF

SCALE: 1 1/2" = 1'-0" | 3 | A4.0 | A11.1

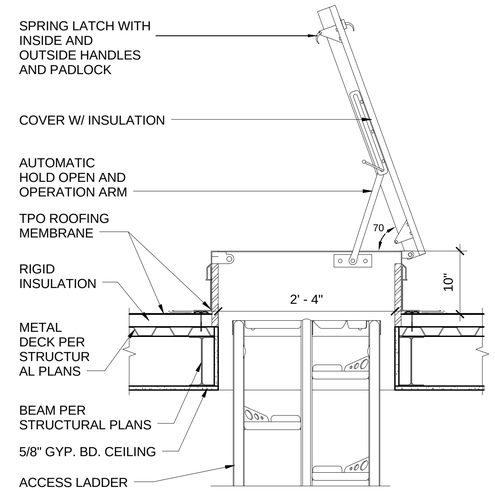

ROOF ACCESS HATCH

SCALE: 1" = 1'-0" | 1 | A4.2 | A11.1

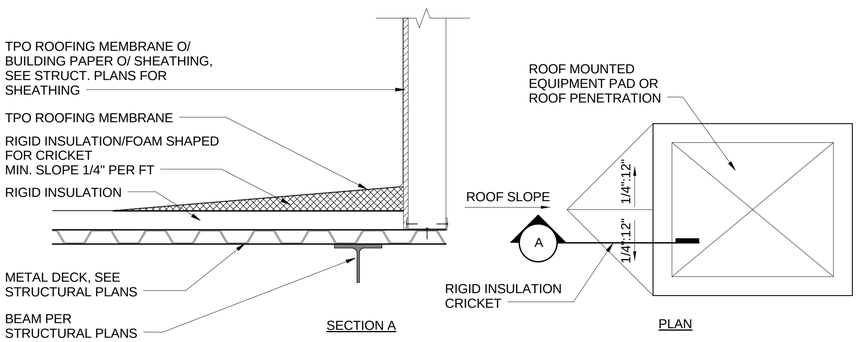

ROOF CRICKET

SCALE: 1 1/2" = 1'-0" | 7 | A4.0 | A11.1

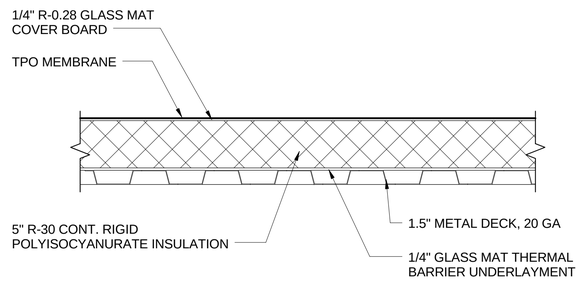

TYPICAL TPO ROOFING

SCALE: 1 1/2" = 1'-0" | 4 | A4.0 | A11.1

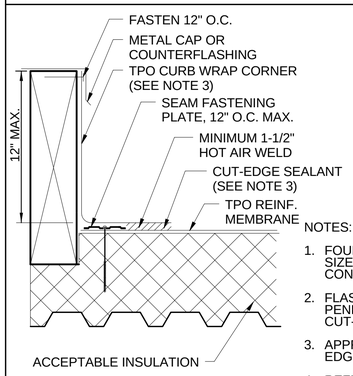

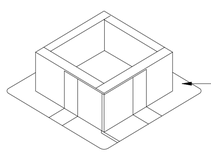

USE ONE TPO CURB WRAP CORNER AT EACH CORNER OF THE CURB. HOT AIR WELD ALL SEAMS IN ACCORDANCE WITH STANDARD SPLICING METHODS. REFER TO NOTE 1.

LIMITED TO 12" MAXIMUM FLASHING HEIGHT
(CUSTOM SIZES AVAILABLE - HEIGHT AND OVERALL LENGTH)

NOTES:

1. FOUR (4) TPO CURB WRAP CORNERS WILL COMPLETELY FLASH A MAXIMUM CURB SIZE OF 6' X 6'. FOR LARGER CURBS USE THE TPO CURB WRAP CORNERS IN CONJUNCTION WITH ADDITIONAL SECTIONS OF TPO EMBRANE.
2. FLASHING MEMBRANE FASTENED APPROXIMATELY 12" ON CENTER. IF FASTENER PENETRATES METAL COUNTERFLASHING, USE NEOPRENE WASHER OR APPLY WATER CUT-OFF MASTIC UNDER COUNTERFLASHING OR CAULK FASTENER HEAD.
3. APPROXIMATELY 1/8" BEAD OF CUT-EDGE SEALANT IS REQUIRED ON THE CUT EDGES OF THE TPO FIELD WRAP CORNER.
4. REFER TO MANUFACTURER SPECIFICATIONS FOR ACCEPTABLE FASTENERS AND PLATES.

EQUIPMENT CURB

SCALE: 12" = 1'-0" | 8 | A4.0 | A11.1

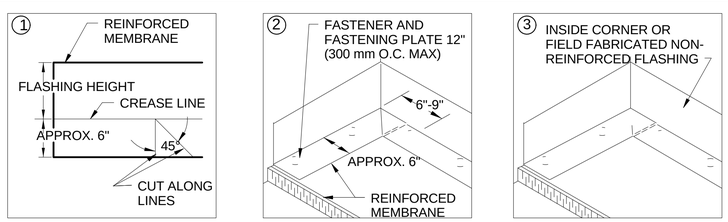

NOTES:

1. BEGIN INSTALLATION OF FASTENING PLATES 6" TO 9" FROM THE CORNER.
2. POSITION FASTENING PLATES 1/2" TO 1" FROM EDGE OF MEMBRANE.
3. APPROXIMATELY 1/8" DIAMETER BEAD OF CUT-EDGE SEALANT IS REQUIRED ON CUT EDGES OF REINFORCED MEMBRANE.
4. REFER TO MANUFACTURER SPECIFICATIONS FOR ACCEPTABLE FASTENERS AND PLATES.

EQUIPMENT CURB FLASHING

SCALE: 12" = 1'-0" | 5 | A4.0 | A11.1

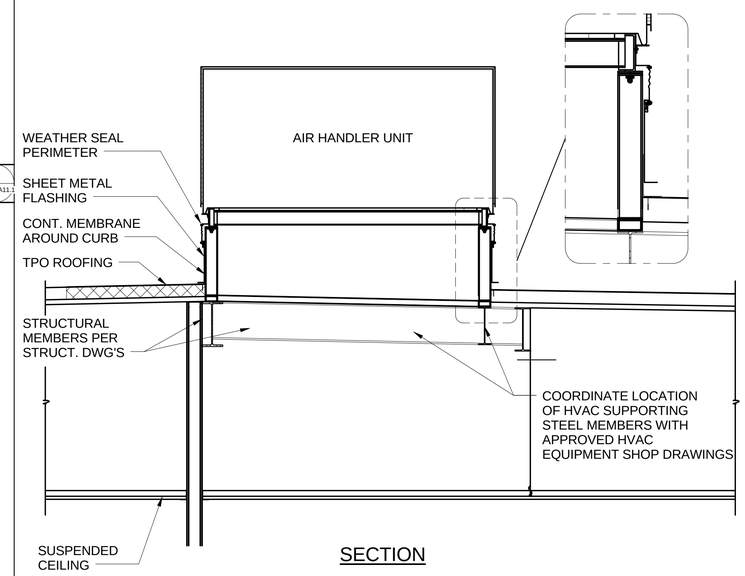

AIR HANDLING SECTION

SCALE: 1/2" = 1'-0" | 2 | A4.2 | A11.1

REGISTERED ARCHITECT
J. BRUCE CAMINO
C23740
Signature
10/31/11
RenewalDate
STATE OF CALIFORNIA

DEVELOPMENT ONE, INC.
1611 East Fourth Street, Suite 250
Santa Ana, California 92701
J. Bruce Camino, Architect, AIA, NCARB
(714) 689-0298
(714) 648-0197 FAX

DATE	SYM	REVISION	BY	A'PD

NATIONAL AERONAUTICS AND SPACE ADMINISTRATION

DRYDEN FLIGHT RESEARCH CENTER
EDWARDS, CA

DRAWING TITLE

ROOF DETAILS

PROJECT TITLE

FACILITIES SUPPORT CENTER BUILDING
100% FINAL DESIGN SUBMITTAL

APPROVALS	DATE
Chief, Facilities Engineering Division Project Office DAN CROWLEY	4/14/11
Project Requestor /Customer DAN CROWLEY	4/14/11
Facilities Project Manager GEMMA FLORES	4/14/11
Chief, Office of Protective Services JOHN ZELLMER	4/14/11
Chief - Safety, Health, and Environmental Office DAN MULLEN	4/14/11
DFRC Chief Information Officer KEN NORLIN	4/14/11

DATE STRTD	11/10/10	DATE PRNTD	03/14/11
DRAWN BY		EDM-1703	
SCALE	AS NOTED	TRADE SH. No.	
FILE NAME		A11.1	SHEET No. 80 of 193