National Aeronautics and Space Administration

DRYDEN FLIGHT RESEARCH CENTER

FACILITIES SUPPORT CENTER
100% FINAL DESIGN SUBMITTAL

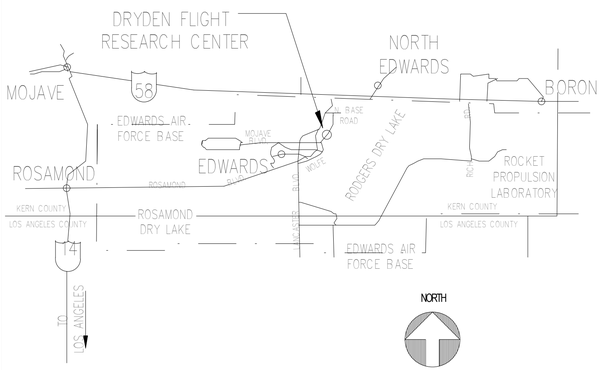

VICINITY MAP

NOT TO SCALE

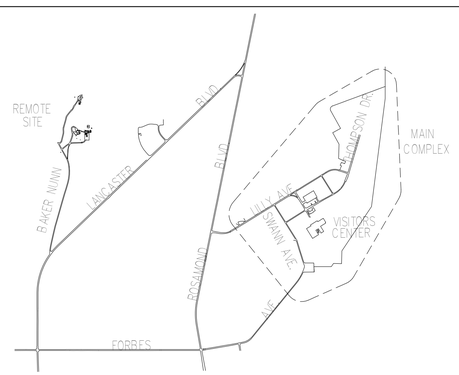

AREA PLAN

NOT TO SCALE

DRYDEN FLIGHT RESEARCH CENTER
MAIN COMPLEX SITE PLAN

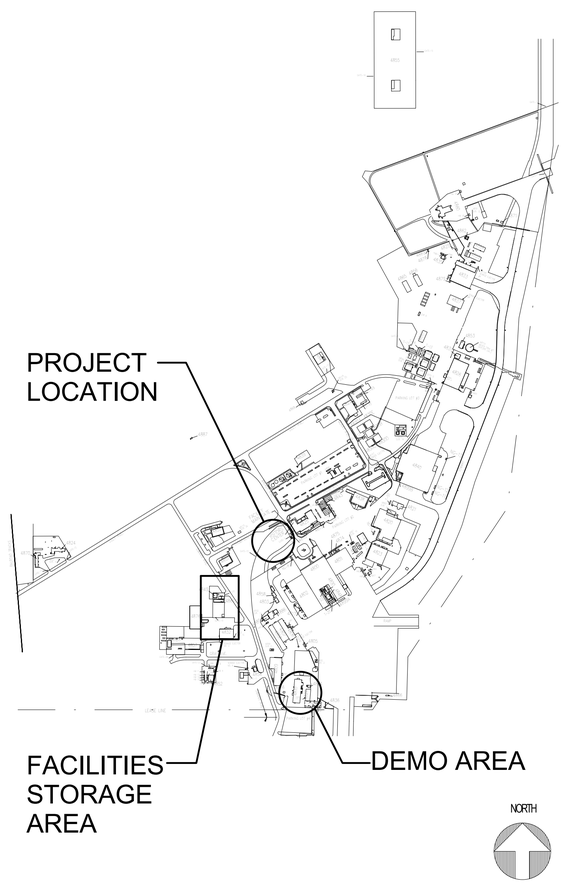

DRAWING INDEX

Sheet Number	Sheet Name
T1.0	TITLE AND INDEX SHEET
T2.0	GENERAL NOTES
C-1.1	CIVIL LEGEND & ABBREVIATIONS
C-1.2	SOIL BORINGS
C-1.3	SOIL BORINGS
C-2.1	DEMOLITION PLAN #1
C-2.2	DEMOLITION PLAN #2
C-3.1	PAVEMENT PLAN #1
C-3.2	PAVEMENT PLAN #2
C-3.3	PAVEMENT PLAN #3
C-4.1	UTILITY PLAN
C-5.1	GRADING PLAN A
C-5.2	GRADING PLAN B
C-6.1	LAYOUT PLAN
C-7.1	STRIPING PLAN
C-8.1	CIVIL DETAILS
C-8.2	CIVIL DETAILS
C-8.3	CIVIL DETAILS
C-8.4	CIVIL DETAILS
C-8.5	CIVIL DETAILS
C-8.6	CIVIL DETAILS
C-8.7	CIVIL DETAILS
C-8.8	STORM WATER PIPE PROFILE
C-8.9	PAVEMENT JOINT PLAN
C-8.10	CIVIL DETAILS
C-9.1	EROSION CONTROL PLAN
C-9.2	EROSION CONTROL NOTES
C-9.3	EROSION CONTROL DETAILS
L-1	LANDSCAPE IRRIGATION PLAN
L-2	LANDSCAPE IRRIGATION DETAILS
L-3	LANDSCAPE PLANTING PLAN
L-4	LANDSCAPE PLANTING DETAILS
A0.0	DEMOLITION SITE PLAN
A0.1	SITE PHOTOS
A0.2	SITE PHOTOS
A1.0	SITE PLAN
A2.0	BUILDING FLOOR PLAN
A2.1	NORTH SEGMENT SLAB PLAN
A2.2	SOUTH SEGMENT SLAB PLAN
A2.3	NORTH SEGMENT FLOOR PLAN
A2.4	SOUTH SEGMENT FLOOR PLAN
A2.5	MEZZANINE FLOOR PLAN
A2.6	ENLARGED PARTIAL FLOOR PLAN
A3.0	OVERALL REFLECTED CEILING PLAN
A3.1	NORTH SEGMENT REFLECTED CEILING PLAN
A3.2	SOUTH SEGMENT REFLECTED CEILING PLAN
A3.3	MEZZANINE RCP & TYPICAL CURVED CEILING LAYOUT
A4.0	ROOF PLAN
A4.1	NORTH SEGMENT ROOF PLAN AT LOW ROOFS
A4.2	SOUTH SEGMENT ROOF PLAN AT LOW ROOFS
A5.0	EXTERIOR ELEVATIONS
A5.1	EXTERIOR ELEVATIONS
A6.0	BUILDING SECTIONS
A6.1	BUILDING SECTIONS
A6.2	BUILDING SECTIONS
A6.3	BUILDING SECTIONS
A6.4	BUILDING SECTIONS
A6.5	PARTIAL & BUILDING SECTIONS
A6.6	WALL SECTIONS
A6.7	WALL SECTIONS
A6.8	WALL TYPES
A6.9	WALL TYPES
A7.0	DOOR SCHEDULE
A7.1	FIRST AND FLAT ROOF LEVEL WINDOW SCHEDULE
A7.2	MEZZANINE LEVEL WINDOW SCHEDULE
A7.3	FINISH SCHEDULE
A8.0	ENLARGED RESTROOM PLANS
A8.1	RESTROOM INTERIOR ELEVATIONS
A8.2	INTERIOR ELEVATIONS
A8.3	INTERIOR ELEVATIONS
A9.0	ENLARGED STAIR #1 PLAN AND SECTION
A9.1	ENLARGED STAIR #2 PLAN AND SECTION
A9.2	ENLARGED LIFT PLAN AND SECTION
A10.0	DOOR DETAILS
A10.1	DOOR DETAILS
A10.2	WINDOW DETAILS
A10.3	STAIR DETAILS
A10.4	STAIR DETAILS
A11.0	ROOF DETAILS
A11.1	ROOF DETAILS
A11.2	CEILING DETAILS
A11.3	TOILET ROOM ACCESSIBILITY DETAILS
A11.4	MILLWORK DETAILS
A12.0	EXTERIOR DETAILS
A12.1	EXTERIOR DETAILS
A12.2	WALL/ COLUMN DETAILS
A12.3	WALL/ COLUMN DETAILS
A13.0	MISC. DETAILS
S1.0	GENERAL NOTES
S1.1	GENERAL NOTES
S1.2	GENERAL NOTES
S2.0	TYPICAL DETAILS
S2.1	TYPICAL DETAILS
S2.2	TYPICAL DETAILS
S2.3	TYPICAL DETAILS
S2.4	TYPICAL DETAILS
S2.5	TYPICAL DETAILS
S3.0	NORTH - FOUNDATION PLAN
S3.1	SOUTH - FOUNDATION PLAN
S3.2	NORTH - LOW ROOF FRAMING PLAN
S3.3	SOUTH - LOW ROOF FRAMING PLAN AND MEZZANINE FRAMING PLAN
S3.4	NORTH - HIGH ROOF FRAMING PLAN
S3.5	SOUTH - HIGH ROOF FRAMING PLAN
S4.0	LATERAL LOAD RESISTING BRACED FRAME AND ROOF DRAG ELEVATIONS
S4.1	FRAME DETAILS
S6.0	FOUNDATION DETAILS
S7.0	FRAMING DETAILS
S7.1	FRAMING DETAILS
S7.2	FRAMING DETAILS
S7.3	FRAMING DETAILS
S7.4	FRAMING DETAILS
S7.5	FRAMING DETAILS
M0.1	MECHANICAL GENERAL NOTES, LEGEND, AND SYMBOLS LIST
M0.2	MECHANICAL SCHEDULES
M0.3	MECHANICAL SCHEDULES
M2.1	MECHANICAL PLAN - NORTH SEGMENT
M2.2	MECHANICAL PLAN - SOUTH SEGMENT
M2.3	MECHANICAL MEZZANINE
M3.1	MECHANICAL PIPING PLAN - NORTH SEGMENT
M3.2	MECHANICAL PIPING PLAN - SOUTH SEGMENT
M3.3	MECHANICAL PIPING PLAN - MEZZANINE
M4.0	MECHANICAL ROOF PLAN - NORTH SEGMENT
M4.1	MECHANICAL ROOF PLAN - SOUTH SEGMENT
M5.0	MECHANICAL ENLARGED PLAN
M6.0	MECHANICAL DETAILS
M6.1	MECHANICAL DETAILS
M6.2	MECHANICAL DETAILS
M6.3	MECHANICAL DETAILS
M6.4	MECHANICAL DETAILS
M6.5	MECHANICAL DETAILS
M6.6	MECHANICAL DETAILS
M6.7	MECHANICAL DETAILS
M7.0	MECHANICAL SECTIONS
M8.0	MECHANICAL VARIABLE REFRIGERANT FLOW CONTROL
M8.1	MECHANICAL CONTROLS
M8.2	MECHANICAL CONTROLS
M8.3	MECHANICAL CONTROLS
P0.1	PLUMBING NOTES, LEGEND AND ABBREVIATIONS
P0.2	SCHEDULES
P1.0	PLUMBING SITE PLAN
P2.0	PLUMBING OVERALL PLAN
P2.1	WATER, GAS & COMPRESSED AIR PIPING PLAN - NORTH SEGMENT
P2.2	WATER, GAS & COMPRESSED AIR PIPING PLAN - SOUTH SEGMENT
P2.3	WASTE, VENT & STORM DRAIN PIPING PLAN - NORTH SEGMENT
P2.4	WASTE, VENT & STORM DRAIN PIPING PLAN - SOUTH SEGMENT
P2.5	CONDENSATE DRAIN PIPING PLAN - NORTH SEGMENT
P2.6	CONDENSATE DRAIN PIPING PLAN - SOUTH SEGMENT
P2.7	PLUMBING MEZZANINE
P2.8	PARTIAL MEZZANINIE PLAN - BOILER ROOM
P3.0	PLUMBING ROOF PLAN
P4.0	PLUMBING ENLARGED PLANS
P4.1	PLUMBING ENLARGED PLANS
P5.0	PLUMBING PIPING DIAGRAMS
P6.0	PLUMBING DETAILS
E0.1	ELECTRICAL NOTES, LEGEND AND ABBREVIATIONS
E0.2	ELECTRICAL SCHEDULES
E0.3	ELECTRICAL SCHEDULES
E0.4	ELECTRICAL SCHEDULES
E0.5	ELECTRICAL SCHEDULES
E0.6	ELECTRICAL SINGLE LINE DIAGRAM
E0.7	ELECTRICAL SINGLE LINE DIAGRAM (CONT)
E1.0	ELECTRICAL SITE PLAN
E2.1	POWER AND SIGNAL - NORTH SEGMENT
E2.2	POWER AND SIGNAL - SOUTH SEGMENT
E2.3	POWER AND SIGNAL MEZZANINE
E3.1	LIGHTING PLAN - NORTH SEGMENT
E3.2	LIGHTING PLAN - SOUTH SEGMENT
E3.3	LIGHTING MEZZANINE
E4.0	POWER ROOF PLAN
E6.0	ELECTRICAL DETAILS
E7.0	BLDG 4810, BLDG 4827, WELD SHOP DEMOLITION
E8.0	LIGHTING CONTROL PANEL AND NOTES
FA0.1	FIRE ALARM PLAN
FA0.2	DRAWING SHEET LIST, NOTES, LEGENDS, FIRE ALARM SYSTEM OPERATIONS MATRIX
FA1.1	FIRE ALARM FLOOR PLAN FIRST FLOOR - NORTH
FA1.2	FIRE ALARM FLOOR PLAN FIRST FLOOR - SOUTH
FA1.3	FIRE ALARM FLOOR PLAN -SECOND FLOOR
FA2.1	FIRE ALARM RISER DIAGRAM CABINET #1
FA2.2	FIRE ALARM RISER DIAGRAM CABINET #2
FA3.1	FACP WIRING DIAGRAM CABINET #1
FA3.2	FACP WIRING DIAGRAM CABINET # 2
FA3.3	LOC PANEL WIRING DIAGRAM
FA3.4	FIRE ALARM POWER SUPPLY WIRING DIAGRAMS
FA3.5	MASS NOTIFICATION POWER SUPPLY WIRING DIAGRAMS
FA4.1	DEVICE WIRING DETAILS
FA4.2	DEVICE WIRING DETAILS
FS1.0	FIRE PROTECTION PLAN
FS1.1	FIRE PROTECTION SITE PLAN
FS2.1	FIRE SPRINKLER PLAN FIRST FLOOR - SOUTH
FS2.2	FIRE SPRINKLER PLAN FIRST FLOOR - NORTH
FS2.3	FIRE SPRINKLER PLAN SECOND FLOOR
FS3.0	FIRE SPRINKLER PLAN BUILDING SECTIONS
FS4.0	FIRE SPRINKLER DETAILS

REGISTERED ARCHITECT
JOHN BRUCE CAMINO
C23740
Signature
10/31/11
RenewalDate
STATE OF CALIFORNIA

DEVELOPMENT ONE, INC.
1611 East Fourth Street, Suite 250
Santa Ana, California 92701
J. Bruce Camino, Architect, AIA, NCARB
(714) 689-0298
(714) 648-0197 FAX

DATE	SYM	REVISION	BY	A'PD

NATIONAL AERONAUTICS AND SPACE ADMINISTRATION

DRYDEN FLIGHT RESEARCH CENTER
EDWARDS, CA

DRAWING TITLE

TITLE AND INDEX SHEET

PROJECT TITLE

FACILITIES SUPPORT CENTER BUILDING
100% FINAL DESIGN SUBMITTAL

APPROVALS		DATE
Chief, Facilities Engineering & Asset Mgmt. Office DAN CROWLEY		4/14/11
Project Requestor /Customer DAN CROWLEY		4/14/11
Facilities Project Manager GEMMA FLORES		4/14/11
Chief, Office of Protective Services JOHN ZELLMER		4/14/11
Chief - Safety, Health, and Environmental Office DAN MULLEN		4/14/11
DFRC Chief Information Officer KEN NORLIN		4/14/11

DATE STRTD	11/08/10	DATE PRNTD	03/14/11
DRAWN BY		EDM-1703	
SCALE	AS NOTED	TRADE SH. No.	
FILE NAME		T1.0	SHEET No. 1 of 193

ABBREVIATIONS

ACT	ACOUSTIC TILE
ACP	ACCESS PANEL
ACT	ASBESTOS COMPOSITION TILE
AFF	ABOVE FINISH FLOOR
ALUM	ALUMINUM
BD	BOARD
BLDG	BUILDING
CPT	CARPET
CEM	CEMENT
CH	CEILING HEIGHT
CLG	CEILING
CLR	CLEAR
CMU	CONCRETE MASONRY UNIT
CONC	CONCRETE
CPOI	CONTRACTOR PROVIDED OWNER INSTALLED
CT	CERAMIC TILE
DIA	DIAMETER
DWP	DRYWALL PAINTED
DR	DOOR
DBL	DOUBLE
(E)	EXISTING
EM	ELASTOMERIC MEMBRANE
EN	ENAMEL
EWC	ELECTRIC WATER COOLER
EXIST	EXISTING
EC	EXPOSED CONSTRUCTION
ECP	EXPOSED CONSTRUCTION PAINTED
EXTR	EXTRUDED
EXT	EXTERIOR
FBI	FEDERAL BUREAU OF INVESTIGATION
FC	FINISH CEILING
FD	FLOOR DRAIN
FF	FINISHED FLOOR
FIN	FINISH(ED)
FEC	FIRE EXTINGUISHER CABINET
FL	FLOOR
FOW	FACE OF WALL
GALV	GALVANIZED
GL	GLASS
GWB	GYPSUM WALL BOARD
GYP	GYPSUM
HC	HOLLOW CORE
HDW	HARDWARE
HM	HOLLOW METAL
HR	HOUR
HT	HEIGHT
HWD	HARDWOOD
INS	INSULATION
INT	INTERIOR
LAM	LAMINATE
LCT	LINOLEUM COMPOSITION TILE
MAX	MAXIMUM
MFT	MINERAL FISSURED TILE
MIN	MINIMUM
MWP	MEMBRANE WATERPROOFING
NAT	NATURAL
(N)	NEW
NIC	NOT IN CONTRACT
OAE	OR APPROVED EQUAL
OPCI	OWNER PROVIDED, CONTRACTOR INSTALLED
OPOI	OWNER PROVIDED, OWNER INSTALLED
PEB	PRE-ENGINEERED BUILDING
PERF	PERFORATED
PL	PLASTER
P-LAM	PLASTIC LAMINATE
PNL	PANEL
PT	PAINT
PTN	PARTITION
PWD	PLYWOOD
QT	QUARRY TILE
RB	RUBBER BASE
RE	REFER TO
REC	RECESSED
REIN	REINFORCING
RM	ROOM
SC	SOLID CORE
SIM	SIMILAR
ST	STEEL
SS	STAINLESS STEEL
SSD	SEE STRUCTURAL DRAWINGS
STRUCT	STRUCTURAL
SUSP	SUSPENDED
T&G	TONGUE & GROOVE
TBD	TO BE DETERMINED
TEL	TELEPHONE
THLD	THRESHOLD
T.O.D.	TOP OF DECK
T.O.M.	TOP OF MASONRY
T.O.P.	TOP OF PARAPET
T.O.S.	TOP OF STEEL
UBC	UNIFORM BUILDING CODE
TYP	TYPICAL
UC	UNDER CUT
UON	UNLESS OTHERWISE NOTED
VCT	VINYL COMPOSITION TILE
VIF	VERIFY IN FIELD
VWC	VINYL WALL COVERING
VYN	VINYL
WC0	WALL CLEAN OUT
WD	WOOD
WR	WATER RESISTANT
W/	WITH
WWF	WOVEN WIRE FABRIC

ABBREVIATIONS

EXTERIOR ELEVATION AND PHOTO REFERENCES

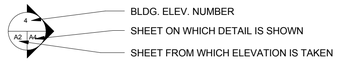

SYMBOL LEGEND

ROOM REFERENCE

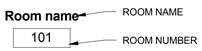

DETAIL REFERENCE

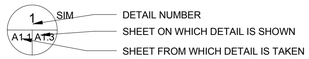

BUILDING SECTION

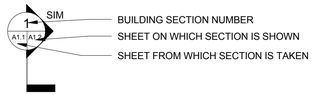

INTERIOR ELEVATION REFERENCE

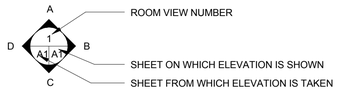

INDICATES DIMENSION IS TO CENTERLINE OF WALL/ COLUMN

INDICATES DIMENSION IS TO FACE OF STUD

INDICATES DIMENSION IS TO GRIDLINE

CONSTRUCTION BID OPTIONS

CONTRACTOR SHALL ISSUE THE BID WITH THE FOLLOWING ITEMS INCLUDED AS DISTINCT, SEPARATE BID OPTIONS. NO OTHER SEPARATION OF OPTIONS OR ALLOWANCE ITEMS IS TO BE INCLUDED IN THE BID. SEE ENTIRE SET FOR LOCATION AND DESCRIPTION OF BID OPTIONS.

OPTIONS #1	DEMOLITION OF BUILDING 4804,4810 AND 4827 TO STRUCTURAL SLAB. CUT AND CAP ALL UTILITIES AT SLAB AND ABANDON IN-PLACE
OPTIONS #2	COMPLETE PHOTOVOLTAIC SYSTEM
OPTIONS #3	ROOF-MOUNTED TUBULAR DAYLIGHTING DEVICES
OPTIONS #4	LANDSCAPING, INCLUDING ALL PLANTING, IRRIGATION, GRANITE BOULDERS, AND FLAGSTONE PATH. RUBBLE AND GRAVEL GROUNDCOVER TO REMAIN IN BASE BID. EXCLUDES PLANTING AND IRRIGATION AT PARKING LOT. SEE OPTION 7.
OPTIONS #5	DEMOLITION OF CONCRETE SLAB FOUNDATIONS FOR BUILDINGS 4804,4810 AND 4827. FINISH AREAS TO NATURAL GRADE. CUT AND CAP ALL UTILITIES AT FOUNDATION PERIMETER.
OPTIONS #6	ASPHALT PAVING AT DEMOLITION AREA OF BUILDING 4804, 4810, AND 4827
OPTIONS #7	PARKING LOT ADJACENT TO SWANN AVE. ENTRANCE TO SITE. PARKING LOT OPTION INCLUDES GRADING, PERVIOUS PAVEMENT, STRIPING, SIGNAGE, SIDEWALK AT EAST SIDE, PARKING LOT LANDSCAPING & IRRIGATION, AND LIGHTING (6 POLES).

LEGEND:

# INDICATES CONSTRUCTION BID OPTION NUMBER

INDICATES BID OPTION ITEM OR LOCATION OF REVISION

# INDICATES DRAWING REVISION NUMBER

GENERAL NOTES

1. ALL WORK SHALL BE PERFORMED IN ACCORDANCE WITH THE FOLLOWING CODES, REGULATIONS AND ORDINANCES HAVING JURISDICTION.

   - INTERNATIONAL BUILDING CODE (2006 EDITION)
   - 2006 UNIFORM PLUMBING CODE (UPC)
   - NATIONAL ELECTRICAL CODE
   - NATIONAL FIRE CODES (NFPA)
   - UNIFORM MECHANICAL CODE
   - NASA SAFETY STANDARD FOR FIRE PROTECTION (NASA-STD-8719.11)
   - USGBC LEED REFERENCE GUIDE, V3.0, LEED 2009

2. INSTALL ALL MANUFACTURED ITEMS, MATERIALS AND EQUIPMENT IN STRICT ACCORDANCE WITH THE MANUFACTURER'S SPECIFICATIONS.

3. CONTRACTOR IS RESPONSIBLE FOR EXAMINING ALL CONTRACT DOCUMENTS, AND FIELD CONDITIONS AND CONFIRMING THAT WORK MAY BE CONSTRUCTED AS SHOWN BEFORE PROCEEDING WITH CONSTRUCTION. IF THERE ARE ANY QUESTIONS REGARDING THESE OR OTHER COORDINATION QUESTIONS, THE CONTRACTOR IS RESPONSIBLE FOR OBTAINING A CLARIFICATION FROM THE CONTRACTING OFFICER BEFORE PROCEEDING WITH WORK IN QUESTION.

4. ALL WORK NOTED "N.I.C." OR "NOT IN CONTRACT" IS TO BE ACCOMPLISHED BY A CONTRACTOR OTHER THAN THE GENERAL CONTRACTOR AND IS NOT TO BE PART OF THE CONSTRUCTION AGREEMENT. THE GENERAL CONTRACTOR SHALL COORDINATE WITH OTHER CONTRACTORS AS REQUIRED.

5. "TYPICAL" AS USED IN THESE DOCUMENTS SHALL MEAN THAT THE CONDITION IS THE SAME OR REPRESENTATIVE FOR ALL SIMILAR CONDITIONS THROUGHOUT, UNLESS OTHERWISE NOTED.

6. CONTRACTOR IS TO ERECT AND MAINTAIN TEMPORARY BRACING, BARRICADES, SIGNS, AND OTHER MEASURES AS NECESSARY TO PROTECT THE PUBLIC, WORKERS, AND OTHER PERSONS, AND ADJOINING PROPERTY FROM DAMAGE FROM DEMOLITION WORK, ALL IN ACCORDANCE WITH THE APPLICABLE CODES AND REGULATION. CONTRACTOR IS TO PROVIDE NOISE AND DUST ABATEMENT AS REQUIRED TO PREVENT DISTURBANCE AND NUISANCE TO ADJACENT PREMISES AND SURROUNDING AREAS. DEMOLITION AND REMOVAL WORK SHALL BE DONE IN A MANNER WHICH WILL MINIMIZE THE SPREAD OF DUST AND FLYING PARTICLES. REMOVED MATERIALS AND DEBRIS SHALL BECOME THE PROPERTY OF THE CONTRACTOR AND SHALL BE DISPOSED OF IN A LEGAL MANNER.

7. CONTRACTOR SHALL VERIFY ALL CONDITIONS AND DIMENSIONS AT THE JOB SITE PRIOR TO BIDDING AND START OF CONSTRUCTION. IF ANY DISCREPANCIES ARE FOUND, CONTRACTING OFFICER SHALL BE NOTIFIED FOR CLARIFICATION.

8. ALL BUILDING, ELECTRICAL, PLUMBING, HVAC. AND SHOP DRAWINGS USED IN CONJUNCTION WITH THE ARCHITECTURAL DRAWINGS SHALL BE EACH CONTRACTOR'S SPECIFIC AND EXCLUSIVE RESPONSIBILITY TO VERIFY ALL EXISTING CONDITIONS AND DIMENSIONS BEFORE MANUFACTURING AND/OR FABRICATION OF ALL WORK. ANY WORK PROVIDED AND INSTALLED IN CONFLICT WITH THE ARCHITECTURAL DOCUMENTS SHALL BE CORRECTED BY EACH CONTRACTOR AT NO ADDITIONAL COST TO THE CONTRACTING AGENCY.

9. ALL FEES AND PERMITS SHALL BE PROCESSED AND OBTAINED DIRECTLY BY NASA. NO BUILDING PERMIT IS REQUIRED TO BE SECURED BY THE CONTRACTOR.

10. ALL SYMBOLS AND ABBREVIATIONS ARE CONSIDERED TO BE CONSTRUCTION STANDARDS. IF ANY CONTRACTOR HAS A QUESTION OR NEEDS CLARIFICATION, CONTRACTING AGENCY IS TO BE CONTACTED BEFORE WORK, MANUFACTURING AND/OR FABRICATION COMMENCES.

11. ALL DIMENSIONS ARE FROM FACE OF STUD TO FACE OF STUD UNLESS INDICATED OTHERWISE. DOOR OPENINGS IN GYPSUM BOARD PARTITIONS NOT DIMENSIONED ARE TO BE LOCATED WITHIN 4" OF ADJOINING PARTITIONS.

12. DO NOT SCALE DRAWINGS; WRITTEN DIMENSIONS TAKE PRECEDENCE. LARGE SCALE DETAILS GOVERN OVER SMALL SCALE DETAILS.

13. ALL LEGAL EXITS SHALL BE MAINTAINED DURING CONSTRUCTION; AND, IN THEIR FINAL CONSTRUCTION, ALL LEGAL EXITS SHALL BE OPENABLE AND HAVE CODE WORTHY HARDWARE FROM INSIDE SPACES WITHOUT THE USE OF A KEY, SPECIAL EFFORT OR KNOWLEDGE, AND SHALL BE PROVIDED WITH ILLUMINATED "EXIT" SIGNS AS REQUIRED BY CODES AND ORDINANCES AND FIRE DEPARTMENT.

14. NOT USED

15. THERE SHALL BE NO SUBSTITUTIONS ALLOWED OF ANY SPECIFIED FINISH, APPLIANCE, OR FIXTURE AS CONTAINED HEREIN UNLESS APPROVAL IS GIVEN BY THE CONTRACTING OFFICER.

16. THE CONTRACTOR SHALL COMPLY WITH THE SAFETY REQUIREMENTS AND PROCEDURES SPECIFIED IN CONTRACT SPECIFICATION SECTION O1 35 14.11 40 "DRYDEN SAFETY REQUIREMENTS" IN PERFORMING WORK UNDER THIS CONTRACT.

GENERAL NOTES (CONT)

17. THE PROJECT IS DESIGNED TO ACHIEVE PLATINUM LEED CRETIFICATION AS DESIGNATED BY THE U.S. GREEN BUILDING COUNCIL. THE LEED CREDITS SOUGHT FOR PURPOSE OF THIS CERTIFICATION ARE IDENTIFIED IN TABLE 1 OF SPECIFICATIONS SECTION 01 33 29 LEED DOCUMENTATION. ALL CONSTRUCTION ACTIVITIES MUST BE CONSISTENT WITH THE ACHIEVMENT OF THE CREDITS IDENTIFIED. IF ANY CIRCUMSTANCE OR QUESTION ARISES ABOUT THE ACHIEVEMENT OF THE LED CREDITS IDENTIFIED, THE CONTRACTOR IS RESPONSIBLE FOR OBTAINING A CLARIFICATION FROM THE CONTRACTING OFFICER BEFORE PROCEEDING WITH WORK IN QUESTION.

PROJECT TEAM

ARCHITECTURAL

DEVELOPMENT ONE, INC.
1611 E. FOURTH STREET, SUITE 250
SANTA ANA, CA 92701
TELEPHONE: (714) 689-0298 ex. 91
FAX: (714) 648-0197
E-MAIL:
architects@developmentone.net

STRUCTURAL

STEDMAN & DYSON STRUCTURAL ENGINEERS
3838 CAMINO DEL RIO NORTH, SUITE 110
SAN DIEGO, CA 92108
TELEPHONE: (619) 297-2223
FAX: (619) 297-4913

ELECTRICAL, MECHANICAL & PLUMBING

DONN C. GILMORE & ASSOCIATES, INC.
4051 E. LA PALMA, SUITE A
ANAHEIM, CA 92807
TELEPHONE: (714) 630-4291
FAX: (714) 630-4805

CIVIL

J.B. YOUNG & ASSOCIATES, LTD.
11440 RIVERSIDE DRIVE, SUITE M
LAKESIDE, CA 92040
TELEPHONE: (619) 448-9424
FAX: (619) 448-4690

LANDSCAPE

McCULLOUGH LANDSCAPE ARCHITECTURE, INC.
363 5TH AVENUE, SUITE 301
SAN DIEGO, CA 92101
TELEPHONE: (619) 296-3150
FAX: (619) 501-7725

FIRE PROTECTION

MUDRY & ASSOCIATES
12752 VALLEY VIEW ST., SUITE D
GARDEN GROVE, CA 92845
TELEPHONE: (714) 373-5741
FAX: (714) 373-5781

DEVELOPMENT ONE, INC.
1611 East Fourth Street, Suite 250
Santa Ana, California 92701
J. Bruce Camino, Architect, AIA, NCARB
(714) 689-0298
(714) 648-0197 FAX

JOHN BRUCE CAMINO
C23740
Signature
10/31/11
RenewalDate
STATE OF CALIFORNIA

DATE	SYM	REVISION	BY	A'PD

NATIONAL AERONAUTICS AND SPACE ADMINISTRATION

DRYDEN FLIGHT RESEARCH CENTER
EDWARDS, CA

DRAWING TITLE

GENERAL NOTES

PROJECT TITLE

FACILITIES SUPPORT CENTER BUILDING
100% FINAL DESIGN SUBMITTAL

APPROVALS	DATE
Chief, Facilities Engineering & Asset Mgmt. Office DAN CROWLEY	4/14/11
Project Requestor /Customer DAN CROWLEY	4/14/11
Facilities Project Manager GEMMA FLORES	4/14/11
Chief, Office of Protective Services JOHN ZELLMER	4/14/11
Chief - Safety, Health, and Environmental Office DAN MULLEN	4/14/11
DFRC Chief Information Officer KEN NORLIN	4/14/11

DATE STRTD	11/08/10	DATE PRNTD	03/04/11
DRAWN BY		EDM-1703	
SCALE	AS NOTED	TRADE SH. No.	
FILE NAME		T2.0	SHEET No. 2 of 193

EXISTING CONDITIONS LEGEND

	HORIZONTAL/VERTICAL CONTROL
LP	LIGHT POLE
PP	POWER POLE
TS	TRAFFIC SIGNAL
S, S	SIGN
SP	STAND PIPE
MH	MANHOLE
SMH	SEWER MANHOLE
WH	WATER HANDHOLE
V	VALVE WELL
PIV	POST INDICATOR VALVE
FH	FIRE HYDRANT
DI	DRAIN INLET
CB	CATCH BASIN
TB	TELEPHONE BOOTH
FP	FLAG POLE
	TREE
x 1902.4	SPOT GRADE
IE 1992.3	INVERT ELEVATION
PRV	PRESSURE REDUCING VALVE ASSY
BPA	BACKFLOW PREVENTION ASSEMBLY
	PAINTED CROSSWALK
	PAINTED STOP LINE
	CANOPY/PATIO
1732	STRUCTURE OR BUILDING AND NUMBER
	FENCE
WALL	MASONRY WALL
	RETAINING WALL
C&G	CURB/GUTTER
ASPH.	ASPHALT SURFACE
DIRT	DIRT SURFACE
CONC.	CONCRETE SURFACE
	GUARDRAIL
	TREE LINE
1750	INDEX CONTOUR (5' INTERVALS)
	INTERMEDIATE CONTOUR (1' INTERVALS)
	APPROXIMATE CONTOUR
HDWL	HEADWALL
E	ELECTRICAL LINE–UNDERGROUND
E O/H	ELECTRICAL LINE–OVERHEAD
FUEL	FUEL LINE
T	TELECOMMUNICATIONS
S	SANITARY SEWER LINE
SFM	SANITARY SEWER FORCEMAIN LINE
W	POTABLE WATER LINE
G	NATURAL GAS
F	NON–POTABLE WATER LINE USED EXCLUSIVELY FOR FIRE SUPPRESSION SYSTEMS AND FIRE HYDRANTS.

ABBREVIATIONS

A	ANGLE
AA	ABANDONED COMP AIR
AB	ABANDONED
ACP	ASBESTOS CEMENT PIPE
AC	ASPHALTIC CONCRETE
AG	ABANDONED GAS
ARV	AIR RELEASE VACUUM ASSY
AS	ABANDONED SEWER
ASPH	ASPHALT
ASSY	ASSEMBLY
AVE.	AVENUE
AW	ABANDONED WATER
A/G	ABOVE GROUND
B	BELL
BC	BEGIN CURVE
BFP	BACKFLOW PREVENTER
BLDG	BUILDING
B/G	BELOW GROUND
BOT	BOTTOM
BOV	BLOW–OFF VALVE ASSY
CB	CATCH BASIN
CICB	CURB INLET CATCH BASIN
CI	CAST IRON
CL	CLASS, CENTER LINE
CLR	CLEAR
CMU	CONCRETE MASONRY UNIT
CO	CLEANOUT
COM	COMMUNICATIONS
COMP	COMPRESSED
COND	CONDUIT
CONT	CONTINUOUS
CONC	CONCRETE
CONN	CONNECT, CONNECTION
CPLG	COUPLING
C&G	CURB/GUTTER
℄	CENTER LINE
DET	DETAIL
DBL	DOUBLE
DIA, ø	DIAMETER
DI	DUCTILE IRON
D.I.P.,DIP	DUCTILE IRON PIPE
DWG.	DRAWING
E	EAST, EASTINGS, ELECTRIC
EQ	EQUAL
EA	EACH
EC	END CURVE
EIC	ENGINEER IN CHARGE
EL	ELEVATION
ELEC	ELECTRICAL
EMH	ELECTRICAL MANHOLE
ETC	ETCETERA
EW	EACH WAY
EXP	EXPANSION
EXST	EXISTING
FH	FIRE HYDRANT
FLG	FLANGE
FIN.	FINISH
FL	FLOOR
FF	FINISHED FLOOR
FO	FIBER OPTIC
FS	FAR SIDE
FT	FEET
FW	FIRE WATER
GAL	GALLON
GALV	GALVANIZED
GB	GRADE BREAK
GP	GUARD POST
GR	GUARD RAIL
GIS	GEOGRAPHICAL INFORMATION SYSTEM
GPM	GALLONS PER MINUTE
GPS	GEOGRAPHICAL POSITIONING SYSTEM
GR	GRADE
GUT.	GUTTER
GV	GATE VALVE
H	HIGH, HEIGHT
HH	HANDHOLE
HDPE	HIGH DENSITY POLYETHYLENE
HDWL	HEADWALL
HORIZ	HORIZONTAL
HTHW	HIGH TEMPERATURE HOT WATER
HWY	HIGHWAY
I.D.	INTERIOR DIMENSION
IE	INVERT ELEVATION
INV	INVERT
IRR	IRRIGATION
L	ARC LENGTH, LENGTH
LA	LANDSCAPED AREA
MAX	MAXIMUM
MIN	MINIMUM
MH	MANHOLE
MFR	MANUFACTURER
N	NORTH, NORTHINGS
NAD	NORTH AMERICAN DATUM
NAVD	NORTH AMERICAN VERTICAL DATUM
NAVFAC	NAVAL FACILITIES
N.I.C.	NOT IN CONTRACT
NPW	NON–POTABLE WATER
NF	NOT FOUND
NS	NEAR SIDE
NO.,#	NUMBER
O/C	ON CENTER
OD	OUTSIDE DIAMETER
OH, O/H	OVER HEAD
OPNG	OPENING
OS&Y, OSY	OUTSIDE STEM & YOKE
P	POLE
PCC	PORTLAND CEMENT CONCRETE
PE	PLAIN END
PE	POLYETHYLENE
PIV	POST INDICATOR VALVE
PL	PLATE
POC	POINT OF CONNECTION
PNL	PANEL
PRV	PRESSURE REDUCING VALVE
PSF	POUNDS PER SQUARE FOOT
PSI	POUNDS PER SQUARE INCH
PT	POST
PWO	PUBLIC WORKS OFFICE
PP	POWER POLE
PVC	POLYVINYL CHLORIDE
PVMT	PAVEMENT
R	RADIUS
RD.	ROAD
RED.	REDUCER
REF	REFERENCE
REINF	REINFORCED
REQD	REQUIRED
RJ	RESTRAINED JOINT
RPBP	REDUCED PRESSURE BACKFLOW PREVENTER
S/C	CONC. LINED/COATED STEEL PIPE
SS	SANITARY SEWER
SCH	SCHEDULE
S	SIGN, SLOPE
SFM	SEWER FORCE MAIN
SIM	SIMILAR
SMH	SEWER MANHOLE
SQ	SQUARE
SST	STAINLESS STEEL
ST.	STREET
STA	STATION
STL	STEEL
SP	STANDPIPE
TAP.	TAPPING
TB	TOP OF BERM
TD	TRENCH DRAIN
TEL.	TELEPHONE
TG	TOP OF GRATE
TMH	TELEPHONE MANHOLE
TP	TOP OF PAVEMENT
TYP	TYPICAL
T&B	TOP AND BOTTOM
U/G	UNDERGROUND
UL	UNDERWRITERS LABORATORIES
UNK	UNKNOWN
U.O.N.	UNLESS OTHERWISE NOTED
UTIL	UTILITY
V	VALVE
VCP, V.C.P.	VITRIFIED CLAY PIPE
VERT	VERTICAL
VLT	VAULT
W	WATER, WIDE, WIDTH
WH	WATER HANDHOLE
WLS	WELDED STEEL
W/	WITH
±	PLUS OR MINUS
△	DELTA

HORIZONTAL AND VERTICAL CONTROL

MONUMENT #1:

CONCRETE MONUMENT AT CORNER OF WALKER AVE AND THOMPSON DR
NORTHERN 528,183.086'
EASTERN 2,033,650.182'
ELEVATION 2,292.15'

MONUMENT #2:

CONCRETE MONUMENT NEAR CORNER OF MCKAY AVE AND THOMPSON DR
NORTHERN 528,601.559'
EASTERN 2,034,416.916'
ELEVATION 2,280.77'

MONUMENT #3:

CONCRETE MONUMENT AT CORNER OF WALKER AVE AND LILLY AVE
NORTHERN 528,717.766'
EASTERN 2,033,320.393'
ELEVATION 2,305.56'

GENERAL NOTES

1) CONTRACTOR SHALL POTHOLE EXISTING UTILITY PIPES THAT CROSS NEW UTILITY PIPES AT EVERY CROSSING BEFORE ORDERING ANY CIVIL SITE MATERIALS. CONTRACTOR SHALL RECORD TOP AND BOTTOM OF PIPE / DUCT BANK ELEVATIONS AT EACH PIPE CROSSING. CONTRACTOR SHALL NOTIFY CONTRACTING OFFICER OF ANY POSSIBLE CONFLICTS BETWEEN NEW AND EXISTING UTILITY ALIGNMENTS. ALL POTENTIAL CONFLICTS SHALL BE RESOLVED BEFORE THE CONTRACTOR IS ALLOW TO ORDER ANY CIVIL UTILITY MATERIALS.

2) ALL NEW FIRE WATER PIPING 12" ø AND BELOW SHALL BE AWWA C900, CLASS 200.

3) ALL NEW FIRE WATER PIPING 14" ø AND HIGHER SHALL BE AWWA C905, CLASS 200.

4) THE CONTRACTOR SHALL PROVIDE ASBUILT GPS HORIZONTAL COORDINATES AND VERTICAL ELEVATIONS FOR ALL NEW UTILITY APPURTANCES PER NAD 83 AND NAVD 88. NEW UTILITY APPURTANCES INCLUDE: WATER & FIRE WATER PIPE BENDS & TEES (TOP OF PIPE), WATER VALVES (TOP OF HANDHOLE), WATER METERS (TOP OF BOX), WATER BPA'S (TOP OF PAD), FIRE HYDRANTS (TOP OF PAD), POST INDICATOR VALVES (TOP OF PAD), SEWER CLEANOUTS (TOP OF HANDHOLE AND INVERT), SEWER MANHOLE (TOP OF COVERS AND INVERT), NATURAL GAS PIPE BEND (TOP OF PIPE) NATURAL GAS VALVES (TOP OF HANHOLE), NATURAL GAS REGULATORS (TOP OF PAD), STORM DRAIN CATCH BASINS (TOP OF GRATE & PIPE INVERT), STORM DRAIN CLEANOUT (TOP OF COVER AND PIPE INVERT), ELECTRICAL & COMM DUCT BANKS OR CONDUIT (TOP OF DUCT BANK OR CONDUIT EVERY 50'). CONTRACTOR SHALL RECORD THIS DATA ON THE ASBUILTS.

JBY# 0622-12

REGISTERED PROFESSIONAL ENGINEER
JONATHAN BERNHARD CHI
NO. 60229
EXP. 6-30-2012
CIVIL
STATE OF CALIFORNIA

JB YOUNG & ASSOCIATES, LTD
11440 Riverside Drive, Suite M
Lakeside, California 92040
(619) 448-9424
(619) 448-4690 FAX

DATE	SYM	REVISION	BY	A'PD

NATIONAL AERONAUTICS AND SPACE ADMINISTRATION
DRYDEN FLIGHT RESEARCH CENTER
EDWARDS, CA

DRAWING TITLE
CIVIL LEGEND & ABBREVIATIONS

PROJECT TITLE
FACILITIES SUPPORT CENTER BUILDING
100% FINAL DESIGN SUBMITTAL

APPROVALS	DATE
Chief, Facilities Engineering & Asset Mgmt. Office DAN CROMLEY	4/14/11
Project Requestor/Customer DAN CROMLEY	4/14/11
Facilities Project Manager GEMMA FLORES	4/14/11
Chief, Office of Protective Services JOHN ZELLMER	4/14/11
Chief – Safety, Health and Environmental Office DAN MALLEN	4/14/11
DFRC Chief Information Officer KEN NORLIN	4/14/11

DATE STRTD	11/04/10	DATE PRNTD	03/14/11
DRAWN BY	JBY	EDM–1703	
SCALE	AS NOTED	TRADE SH. No. C–1.1	
FILE NAME		SHEET No. 3 of 193	

LOG OF BORING

HOLE NO.: B-1 **DATE DRILLED: 11/6/09** **SHEET: 1 OF 1**

PROJECT:	NASA / DRYDEN	EXPLORATION METHOD:	HOLLOW STEM
LOCATION:	FACILITIES SUPPORT CENTER	SIZE OF HOLE:	6"
GROUND ELEVATION:	2303	CONTRACTOR:	DHPE
DEPTH OF WATER TABLE:	NE	DRILLER:	SC DRILLING
DEPTH TO SOLID ROCK:		INSPECTOR:	DEVELOP. ONE

DRY DENSITY (PCF)	UNDISTURBED SAMPLES WEIGHT LBS	DROP INCHES	INCHES DRIVEN	BLOW COUNT	UNDIS	BAG	%W	DEPTH FEET	FIELD DESCRIPTION
								-0-	
								-1-	SAND (SC/SM) TOP PROBABLY DISTURBED DUE TO ROAD REMOVAL
								-2-	
114.4	140	30	12	5/7			2.6	-3-	SAME MATERIAL, TAN, ALLUVIAL SOILS. INGEOUS MINERALS, TYPICAL GRANITE MINERALS FLOATING IN A HIGHLY
								-4-	DECOMPOSED GRANITE SAND. DENSE AFTER ALLUVIUM.
								-5-	WEATHERED ROCK PROGRESSIVLY
125.0	140	30	12	20/50 FOR 5"			2.3	-6-	GETS MORE WELDED, LESS WHETHERED
								-7-	
								-8-	
								-9-	
117.9	140	30	12	32/50 FOR 5"			2.1	-10-	ROCK IS MORE DENSE ALMOST SOLID ROCK
								-11-	NOT VERY WEATHERED
								-12-	HARD TO DRILL. SAMPLE LOST WAS BATTERED ROCK SMASHED INTO SAMPLER
								-13-	TIP
								-14-	
								-15-	
				50 FOR 5"				-16-	
								-17-	END OF BORING
								-18-	
								-19-	
								-20-	

Dale Hinkle P.E., Inc.
15510 Rockfield Blvd., Suite 100
Irvine, California 92618
(949) 458-0498 Fax (949) 458-1918

LOG OF BORING

HOLE NO.: B-2 **DATE DRILLED: 11/6/09** **SHEET: 1 OF 1**

PROJECT:	NASA / DRYDEN	EXPLORATION METHOD:	HOLLOW STEM
LOCATION:	FACILITIES SUPPORT CENTER	SIZE OF HOLE:	6"
GROUND ELEVATION:	2305	CONTRACTOR:	DHPE
DEPTH OF WATER TABLE:	NE	DRILLER:	SC DRILLING
DEPTH TO SOLID ROCK:		INSPECTOR:	DEVELOP. ONE

DRY DENSITY (PCF)	UNDISTURBED SAMPLES WEIGHT LBS	DROP INCHES	INCHES DRIVEN	BLOW COUNT	UNDIS	BAG	%W	DEPTH FEET	FIELD DESCRIPTION
								-0-	
								-1-	SILTY SAND (SC/SM) POORLY SORTED FINES WITH 1CM ROCKS (UP TO)
								-2-	REDDISH TAN COLOR, ANGULAR
114.6	140	30	12	28/10			2.8	-3-	
								-4-	
								-5-	
119.8	140	30	12	11/21			8.2	-6-	
								-7-	
								-8-	
								-9-	WHETHERED GRANITE, ROCK IS BREAKING DOWN AT SEAMS OF MINERAL CONTACTS
105.8	140	30	12	33/50 FOR 2"			3.6	-10-	MINERALS REMAIN INTACT, FELDSPAR HORNBLEND, BIOTITE, ORTHOCLASE
								-11-	FELDSPAR, EPIDOTE, PYRITE
								-12-	
								-13-	
								-14-	GRANITE ROCK - ORTHOCLASE QUARTZ AND BIOTITE/HORNBLEND 1CM TO 1/2 INCH MINERALS
								-15-	VERY HARD/DENSE
114.6	140	30	12	24/50 FOR 1"			4.0	-16-	
								-17-	
								-18-	
89.3	140	30	12	50 FOR 4"			6.2	-19-	END OF BORING UNABLE TO DIG DEEPER
								-20-	

Dale Hinkle P.E., Inc.
15510 Rockfield Blvd., Suite 100
Irvine, California 92618
(949) 458-0498 Fax (949) 458-1918

LOG OF BORING

HOLE NO.: B-3 **DATE DRILLED: 11/6/09** **SHEET: 1 OF 1**

PROJECT:	NASA / DRYDEN	EXPLORATION METHOD:	HOLLOW STEM
LOCATION:	FACILITIES SUPPORT CENTER	SIZE OF HOLE:	6"
GROUND ELEVATION:	2298	CONTRACTOR:	DHPE
DEPTH OF WATER TABLE:	NE	DRILLER:	SC DRILLING
DEPTH TO SOLID ROCK:		INSPECTOR:	DEVELOP. ONE

DRY DENSITY (PCF)	UNDISTURBED SAMPLES WEIGHT LBS	DROP INCHES	INCHES DRIVEN	BLOW COUNT	UNDIS	BAG	%W	DEPTH FEET	FIELD DESCRIPTION
								-0-	SILTY SAND (SM/SC) VERY POORLY SORTED. ALLUVIUM TOP 1-2 FEET
								-1-	GRAINS ARE ANGULAR AND FINES TO 1CM STONES, DENSE, MOIST A FEW
								-2-	FEET DOWN
107.5	140	30	12	5/6			5.9	-3-	TAN/CREAM COLOR WITH TYPICAL GRANITE MINERALS
								-4-	
								-5-	
132	140	30	12	10/50			2.5	-6-	
								-7-	DENSE SANDY/BROKEN DOWN WEATHERED GRANITE
								-8-	
								-9-	
								-10-	
117.5	140	30	12	27/50 FOR 2"			1.4	-11-	DENSE ROCK STARTING SAMPLES ARE BATTERED DUE TO BLOWS
								-12-	
								-13-	
								-14-	
								-15-	
				50 FOR 5"				-16-	
								-17-	
								-18-	END OF BORING
								-19-	
								-20-	

Dale Hinkle P.E., Inc.
15510 Rockfield Blvd., Suite 100
Irvine, California 92618
(949) 458-0498 Fax (949) 458-1918

GENERAL NOTES

1) FOR SOIL BORING LOCATIONS, SEE DRAWING C-2.1.
2) SOILS REPORT TITLE: "REPORT OF GEOTECHNICAL INVESTIGATION – DRYDEN FLIGHT RESEARCH CENTER, FACILITIES SUPPORT CENTER, EDWARDS AFB". DATED 12/01/09, BY DALE HINKLE P.E. INC., RCE # 23023, RGE# 402.

JBY# 0622-12

REGISTERED PROFESSIONAL ENGINEER JONATHAN BERKOWITCH NO. 60229 EXP. 6-30-2012 CIVIL STATE OF CALIFORNIA

JB YOUNG & ASSOCIATES, LTD
11440 Riverside Drive, Suite M
Lakeside, California 92040
(619) 448-9424
(619) 448-4690 FAX

DATE	SYM	REVISION	BY	A'PD

NATIONAL AERONAUTICS AND SPACE ADMINISTRATION
DRYDEN FLIGHT RESEARCH CENTER
EDWARDS, CA

DRAWING TITLE
SOIL BORINGS

PROJECT TITLE
FACILITIES SUPPORT CENTER BUILDING
100% FINAL DESIGN SUBMITTAL

APPROVALS		DATE
Chief, Facilities Engineering & Asset Mgmt. Office DAN CROWLEY		4/14/11
Project Requestor/Customer DAN CROWLEY		4/14/11
Facilities Project Manager GEMMA FLORES		4/14/11
Chief, Office of Protective Services JOHN ZELLMER		
Chief – Safety, Health and Environmental Office DAN MULLEN		4/14/11
DFRC Chief Information Officer KEN NORLIN		4/14/11

DATE STRTD	11/04/10	DATE PRNTD	03/14/11
DRAWN BY	JBY	EDM-1703	
SCALE	AS NOTED	TRADE SH. No.	
FILE NAME		C-1.2	SHEET No. 4 of 193

LOG OF BORING

HOLE NO.: B-4 **DATE DRILLED: 11/6/09** **SHEET: 1 OF 1**

PROJECT:	NASA / DRYDEN	EXPLORATION METHOD:	HOLLOW STEM
LOCATION:	FACILITIES SUPPORT CENTER	SIZE OF HOLE:	6"
GROUND ELEVATION:	2304	CONTRACTOR:	DHPE
DEPTH OF WATER TABLE:	NE	DRILLER:	SC DRILLING
DEPTH TO SOLID ROCK:		INSPECTOR:	DEVELOP. ONE

DRY DENSITY (PCF)	UNDISTURBED SAMPLES WEIGHT LBS	DROP INCHES	INCHES DRIVEN	BLOW COUNT	UNDIS	BAG	%W	DEPTH FEET	FIELD DESCRIPTION
								-0-	SILTY SAND (SM/SC) VERY POORLY SORTED. ANGULAR GRAINS, VERY DENSE
								-1-	DRY TO MOIST AFTER A FEW FEET
								-2-	ALLUVIUM TOP 1-2 FEET
109.6		30	12	9/17			14.6	-3-	
								-4-	
								-5-	
112.4		30	12	13/34			7.5	-6-	WEATHERED ZONE, GRANITE/PEGMATITE ROCK, LARGE MINERALS, EPIDOTE, FELDSPAR, BIOTITE AND HORNBLEND
								-7-	
								-8-	
								-9-	
								-10-	
105.6		30	12	22/50 FOR 2"			27	-11-	ROCK STARTING, MORE SOLID, VERY HARD
								-12-	
								-13-	
								-14-	
								-15-	END OF BORING, UNABLE TO AUGER
								-16-	
								-17-	
								-18-	
								-19-	
								-20-	

Dale Hinkle P.E., Inc.
15510 Rockfield Blvd., Suite 100
Irvine, California 92618
(949) 458-0498 Fax (949) 458-1918

LOG OF BORING

HOLE NO.: B-5 **DATE DRILLED: 11/6/09** **SHEET: 1 OF 1**

PROJECT:	NASA / DRYDEN	EXPLORATION METHOD:	HOLLOW STEM
LOCATION:	FACILITIES SUPPORT CENTER	SIZE OF HOLE:	6"
GROUND ELEVATION:	2302	CONTRACTOR:	DHPE
DEPTH OF WATER TABLE:	NE	DRILLER:	SC DRILLING
DEPTH TO SOLID ROCK:		INSPECTOR:	DEVELOP. ONE

DRY DENSITY (PCF)	UNDISTURBED SAMPLES WEIGHT LBS	DROP INCHES	INCHES DRIVEN	BLOW COUNT	UNDIS	BAG	%W	DEPTH FEET	FIELD DESCRIPTION
								-0-	SILTY SAND (SM/SC) VERY POORLY SORTED, TAN/BROWN, DRY AT SURFACE
								-1-	MOIST A FEW FEET DOWN
								-2-	BROKEN DOWN ROCK AT 2 FEET, ALLUVIUM TOP 1-2 FEET. LARGE MINERALS
126.0		30	12	15/18			1.3	-3-	ON TOP. (POSSIBLE ROAD DEMO TOP FEW FT)
								-4-	
								-5-	
120.3		30	12	14/17			9.6	-6-	DENSE SILTY SAND, TAN/BROWN MINERALS APPROXIMATELY 1MM TO 1CM, FAIRLY DRY, DENSE
								-7-	
								-8-	
								-9-	
								-10-	DENSE SILTY SAND
97.8		30	6	50 FOR 6"			5.4	-11-	WEATHERED ROCK/LARGE MINERALS IN GRANITE ROCK (PEGMATITIC ALMOST) SEAMS ARE BRITTLE, MINERALS ARE HARD
								-12-	
								-13-	
								-14-	
								-15-	
120.3		30	12	22/32			6.0	-16-	ROCK GETS HARDER AND WELDED BETTER
								-17-	
								-18-	
								-19-	
				50 FOR 5"				-20-	END OF BORING

Dale Hinkle P.E., Inc.
15510 Rockfield Blvd., Suite 100
Irvine, California 92618
(949) 458-0498 Fax (949) 458-1918

GENERAL NOTES

1) FOR SOIL BORING LOCATIONS, SEE DRAWING C-2.1.

JBY# 0622-12

REGISTERED PROFESSIONAL ENGINEER
JONATHAN E. BERNICHI
NO. 60229
EXP. 6-30-2012
CIVIL
STATE OF CALIFORNIA

JB YOUNG & ASSOCIATES, LTD
11440 Riverside Drive, Suite M
Lakeside, California 92040
(619) 448-9424
(619) 448-4690 FAX

DATE	SYM	REVISION	BY	A'PD

NATIONAL AERONAUTICS AND SPACE ADMINISTRATION
DRYDEN FLIGHT RESEARCH CENTER
EDWARDS, CA

DRAWING TITLE
SOIL BORINGS

PROJECT TITLE
FACILITIES SUPPORT CENTER BUILDING
100% FINAL DESIGN SUBMITTAL

APPROVALS		DATE
Chief, Facilities Engineering & Asset Mgmt. Office DAN CROWLEY		4/14/11
Project Requestor/Customer DAN CROWLEY		4/14/11
Facilities Project Manager GEMMA FLORES		4/14/11
Chief, Office of Protective Services JOHN ZELLMER		4/14/11
Chief – Safety, Health and Environmental Office DAN MULLEN		4/14/11
DFRC Chief Information Officer KEN NORLIN		4/14/11

DATE STRTD	11/04/10	DATE PRNTD	03/14/11
DRAWN BY	JBY	EDM-1703	
SCALE	AS NOTED	TRADE SH. No. C-1.3	
FILE NAME		SHEET No. 5 of 193	

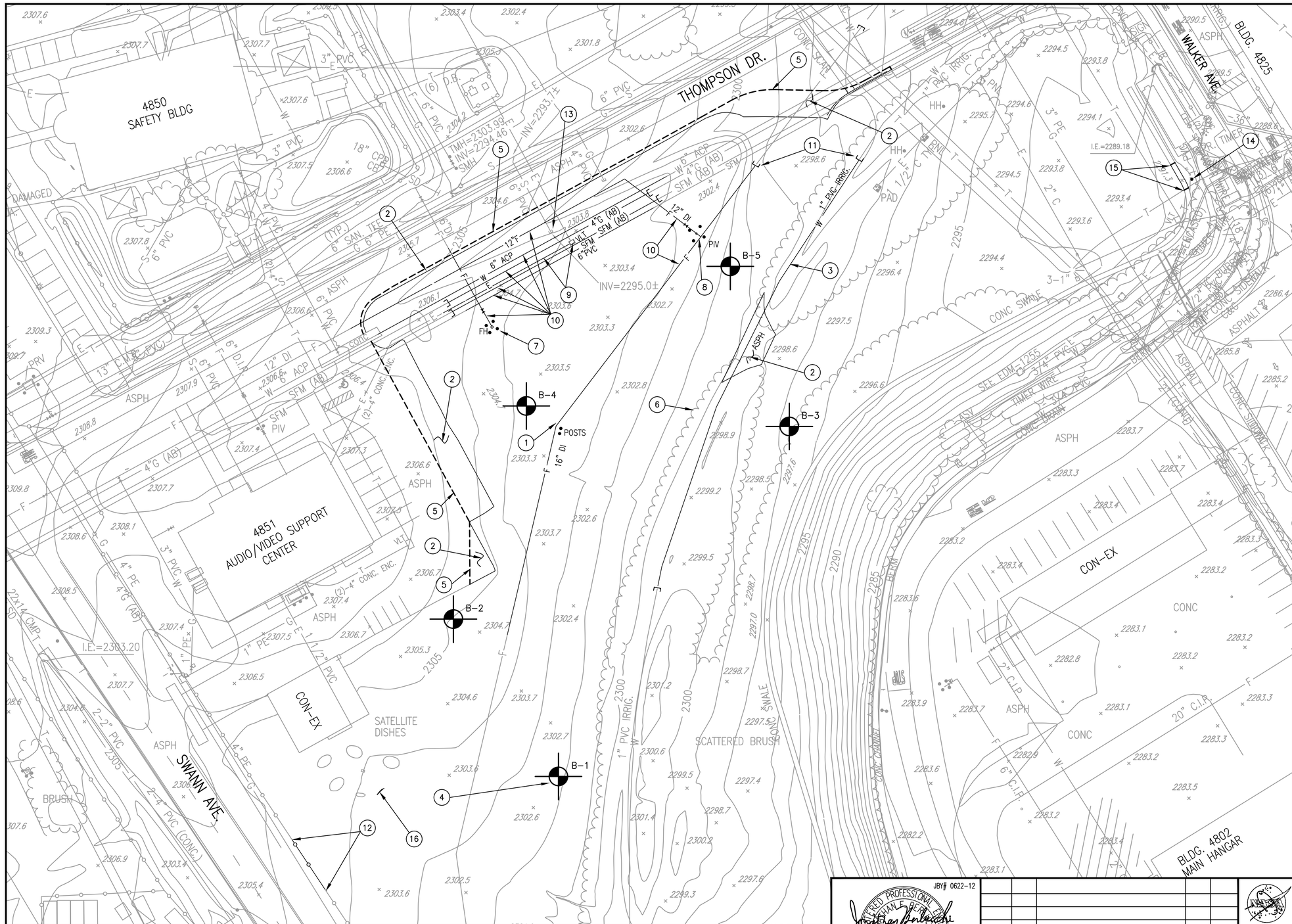

DEMOLITION PLAN #1

SCALE 1" = 30'

GRAPHIC SCALE: 1" = 30'

30' 0 30' 60' 90'

(XX) NOTES:

1) REMOVE AND DISPOSE OF EXST METAL POSTS.
2) REMOVE AND DISPOSE OF ASPHALT PAVEMENT.
3) REMOVE AND DISPOSE OF 1" IRRIGATION LINE.
4) APPROXIMATE SOIL BORING LOCATION, SEE DRAWING C-1.2 & 1.3 FOR LOGS.
5) SAWCUT LINE
6) REMOVE AND DISPOSE OF ALL VEGETATION WITHIN THE LIMITS OF WORK. SEE LIMITS OF WORK LINE ON DRAWING C-9.1.
7) REMOVE AND DISPOSE OF GUARD POSTS AND FIRE HYDRANT
8) REMOVE AND DISPOSE OF GUARD POSTS AND POST INDICATOR
9) REMOVE AND DISPOSE OF PORTION OF EXST U/G CONDUIT & CONDUCTORS. REMOVE AND SALVAGE VAULT. SEE ELECTRICAL DRAWINGS FOR RELOCATION NOTES.
10) REMOVE AND DISPOSE OF U/G UTILITY PIPE.
11) CAP EXISTING U/G PIPE (TYP), SEE DETAIL 1 / C-2.1 | C-8.1
12) REMOVE AND DISPOSE OF EXST CHAIN LINK FENCING AND PREPARE FOR NEW GATE.
13) CONTRACTOR SHALL POTHOLE EXST SEWER PIPE LATERAL AND MEASURE & RECORD PIPE END INVERT BEFORE CONSTRUCTION. CONTRACTOR SHALL INFORM THE CONTRACTING OFFICER OF THE INVERT ELEVATION BEFORE CONSTRUCTION.
14) REMOVE, SALVAGE, AND RELOCATE METAL SIGN AND POST, SEE DWG C-7.1.
15) SAWCUT, REMOVE, AND DISPOSE SECTION OF CONCRETE SWALE.
16) REMOVE AND SALVAGE EXST SATELLITE DISH.

LEGEND:

- DEMOLISH, REMOVE & DISPOSE OF ITEM
- EXISTING ITEM TO REMAIN
- NEW SAWCUT LINE

GENERAL NOTES:

1) REMOVE AND RECYCLE ALL DEMOLITION DEBRIS AT EDWARDS AIR FORCE BASE RECYCLING CENTER AT NO ADDITIONAL COST TO THE GOVERNMENT.
2) UTILITY TRENCH PAVEMENT DEMOLITION NOT SHOWN ON C-2.1 & C-2.2 DEMOLITION PLANS, SEE UTILITY DRAWINGS.

JBY# 0622-12

REGISTERED PROFESSIONAL ENGINEER
JONATHAN BERNSTEIN
NO. 60229
EXP. 6-30-2012
CIVIL
STATE OF CALIFORNIA

JB YOUNG & ASSOCIATES, LTD
11440 Riverside Drive, Suite M
Lakeside, California 92040
(619) 448-9424
(619) 448-4690 FAX

DATE	SYM	REVISION	BY	A'PD

NATIONAL AERONAUTICS AND SPACE ADMINISTRATION
DRYDEN FLIGHT RESEARCH CENTER
EDWARDS, CA

DRAWING TITLE
DEMOLITION PLAN #1

PROJECT TITLE
FACILITIES SUPPORT CENTER BUILDING
100% FINAL DESIGN SUBMITTAL

APPROVALS	DATE
Chief, Facilities Engineering & Asset Mgmt. Office DAN CROWLEY	4/14/11
Project Requestor/Customer DAN CROWLEY	4/14/11
Facilities Project Manager GEMMA FLORES	4/14/11
Chief, Office of Protective Services JOHN ZELLMER	4/14/11
Chief – Safety, Health and Environmental Office DAN MULLEN	4/14/11
DFRC Chief Information Officer KEN NORLIN	4/14/11

DATE STRTD	11/04/10	DATE PRNTD	03/14/11
DRAWN BY	JBY	EDM-1703	
SCALE	AS NOTED	TRADE SH. No. C-2.1	
FILE NAME		SHEET No. 6 of 193	

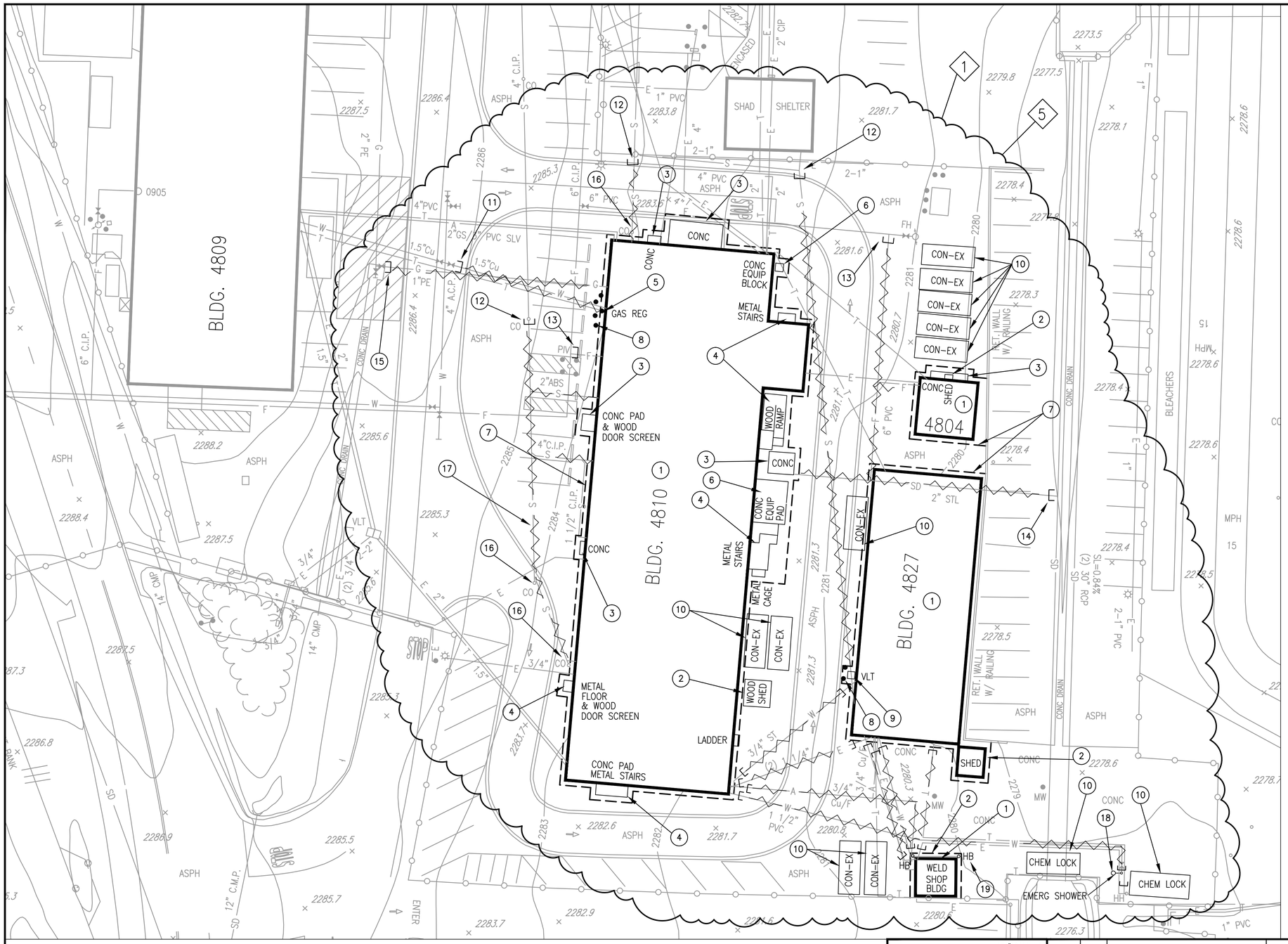

(XX) NOTES:

1) COMPLETELY DEMOLISH, REMOVE, & DISPOSE OF BUILDING 4810, 4827, 4804, & WELD SHOP BLDG, INCLUDING CONCRETE FOUNDATIONS, CONCRETE PADS, UTILITIES.
2) COMPLETELY DEMOLISH, REMOVE, & DISPOSE OF SHED & CONC FOUNDATION.
3) REMOVE AND DISPOSE OF CONC PAD.
4) REMOVE AND DISPOSE OF STAIRS, RAMPS, & DOOR SCREENS.
5) REMOVE AND DISPOSE OF NATURAL GAS REGULATOR.
6) REMOVE AND DISPOSE OF MECH & ELECT EQUIPMENT & CONC FOUNDATIONS.
7) PAVEMENT SAWCUT LINE. REMOVE AND DISPOSE OF ASPHALT / CONC PAVEMENT.
8) REMOVE AND DISPOSE OF GUARD POST (TYP).
9) REMOVE AND DISPOSE OF VAULT.
10) REMOVE, SALVAGE, AND RELOCATE EXISTING CON-EX BOXES & CHEMICAL LOCKERS. MOVE 10 TO BLDG 4851 AREA (SEE DRAWING C-3.3) AND MOVE 2 TO FSC BLDG AREA (SEE DRAWING C-3.1) PER CONTRACTING OFFICERS DIRECTION.
11) CUT & CAP EXISTING WATER LINE AT VALVE. CLOSE VALVE, REMOVE AND DISPOSE OF VALVE WELL AND CONC COLLAR. REPAIR PAVEMENT TO MATCH EXISTING. SEE DETAIL 1 C-2.2 | C-8.1
12) CUT & CAP EXISTING SEWER PIPE AT BEND OR CLEANOUT, REPAIR PAVEMENT TO MATCH EXISTING. SEE DETAIL 1 C-2.2 | C-8.1
13) CUT & CAP EXISTING FIRE WATER PIPE AT TEE, REPAIR PAVEMENT TO MATCH EXISTING. SEE DETAIL 1 C-2.2 | C-8.1
14) CUT & CAP EXISTING ROOF DRAIN PIPE AT STORM DRAIN PIPE MAIN, REPAIR PAVEMENT TO MATCH EXISTING. SEE DETAIL 1 C-2.2 | C-8.1
15) CUT & CAP EXISTING NATURAL GAS PIPE AT VALVE. CLOSE VALVE. REPAIR PAVEMENT TO MATCH EXISTING.
16) CUT & CAP EXISTING SEWER CLEANOUT A MINIMUM OF 24" BELOW FINISHED GRADE. REMOVE AND DISPOSE OF PIPE RISER AND CONC COLLAR. REPAIR PAVEMENT TO MATCH EXISTING. SEE DETAIL 1 C-2.2 | C-8.1
17) ABANDON EXISTING U/G UTILITY PIPE IN PLACE.
18) REMOVE AND DISPOSE OF EMERGENCY SHOWER AND PIPE RISER. PLUG WATER PIPE.
19) REMOVE AND DISPOSE OF HOSE BIB PIPE RISER. PLUG WATER PIPE A MINIMUM OF 24" BELOW FINISHED GRADE (TYP).

GENERAL NOTES:

1) REMOVE AND DISPOSE OF ANY ABANDONED HANDHOLE OR VALVE WELL COVER. FILL HANDHOLE OR VALVE WELL WITH 300 PSI CONCRETE.

LEGEND:

SEE DWG C-1 FOR DEMO LEGEND.

DEMOLITION PLAN #2

SCALE 1" = 20'

GENERAL NOTES:

1) REMOVE AND RECYCLE ALL DEMOLITION DEBRIS AT EDWARDS AIR FORCE BASE RECYCLING CENTER AT NO ADDITIONAL COST TO THE GOVERNMENT.

GRAPHIC SCALE: 1" = 20'

20' 0 20' 40' 60'

TRUE NORTH

JBY# 0622-12

REGISTERED PROFESSIONAL ENGINEER JONATHAN BERNICHI NO. 60229 EXP. 6-30-2012 CIVIL STATE OF CALIFORNIA

JB YOUNG & ASSOCIATES, LTD
11440 Riverside Drive, Suite M
Lakeside, California 92040
(619) 448-9424
(619) 448-4690 FAX

DATE	SYM	REVISION	BY	A'PD

NATIONAL AERONAUTICS AND SPACE ADMINISTRATION
DRYDEN FLIGHT RESEARCH CENTER
EDWARDS, CA

DRAWING TITLE
DEMOLITION PLAN #2

PROJECT TITLE
FACILITIES SUPPORT CENTER BUILDING
100% FINAL DESIGN SUBMITTAL

APPROVALS		DATE
Chief, Facilities Engineering & Asset Mgmt. Office DAN CROWLEY		4/14/11
Project Requestor/Customer DAN CROWLEY		4/14/11
Facilities Project Manager GEMMA FLORES		4/14/11
Chief, Office of Protective Services JOHN ZELLMER		4/14/11
Chief – Safety, Health and Environmental Office DAN MULLEN		4/14/11
DFRC Chief Information Officer KEN NORLIN		4/14/11

DATE STRTD	11/04/10	DATE PRNTD	03/14/11
DRAWN BY	JBY	EDM-1703	
SCALE	AS NOTED	TRADE SH. No. C-2.2	SHEET No. 7 of 193
FILE NAME			

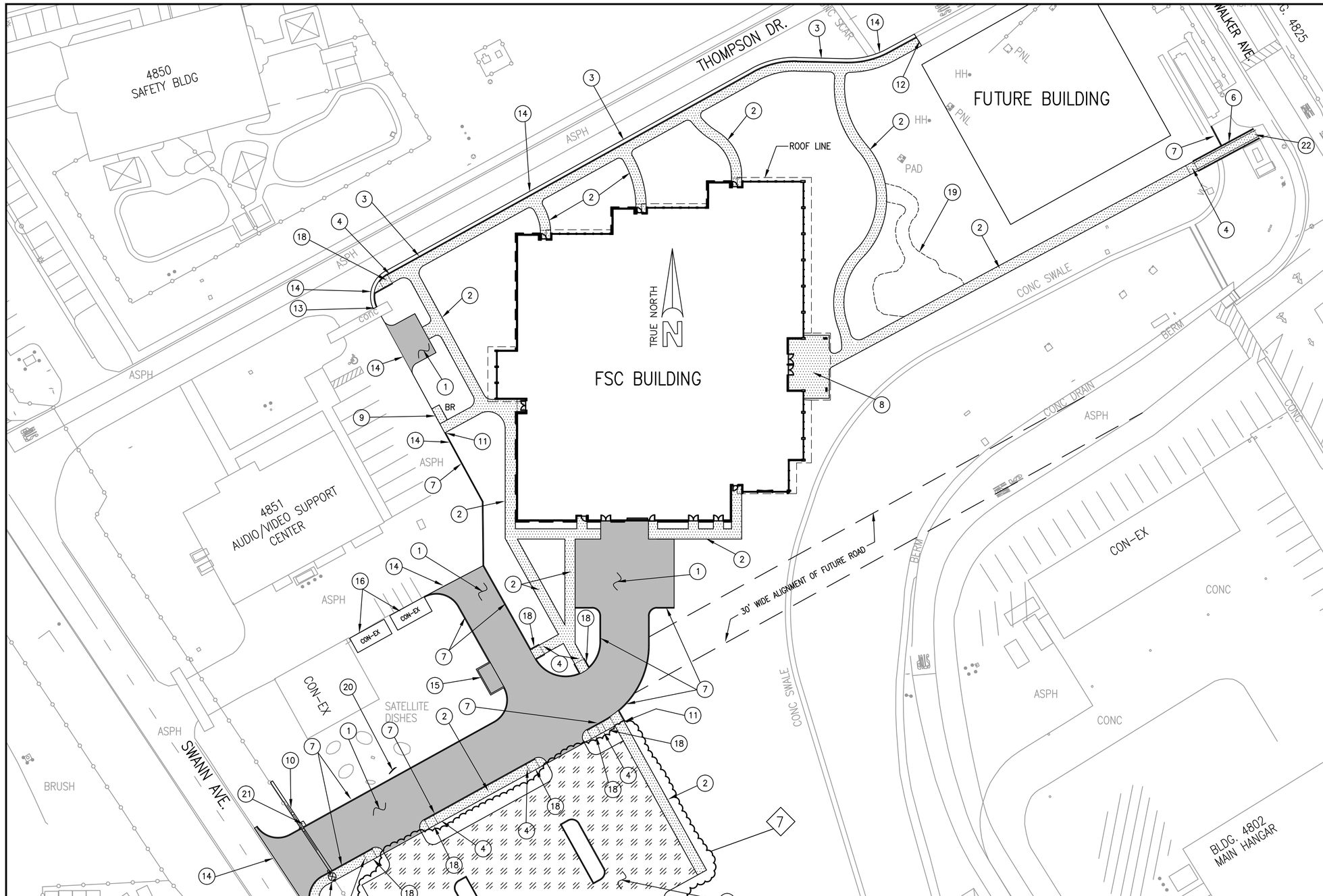

PAVEMENT PLAN

SCALE 1" = 30'

GRAPHIC SCALE: 1" = 30'

30' 0 30' 60' 90'

(XX) NOTES:

1) NEW "WHITE" CONCRETE PARKING & DRIVEWAY PAVEMENT, SEE DETAIL 8 C-3.1 | C-8.1
2) NEW "WHITE" CONCRETE SIDEWALK, SEE DETAIL 7 C-3.1 | C-8.1
3) NEW "WHITE" CONCRETE SIDEWALK, CURB & GUTTER, SEE DETAIL 2 C-3.1 | C-8.1
4) INSTALL GROOVED SECTION OF SIDEWALK AT TOP OF RAMP, SEE DETAIL 2 C-3.1 | C-8.10
5) NEW "WHITE" PERVIOUS CONCRETE PAVED PARKING LOT, SEE DETAIL 5 C-3.1 | C-8.1
6) INSTALL "WHITE" CONC HANDICAP RAMP & HANDRAILS, SEE DETAIL 4 C-3.1 | C-8.2
7) NEW "WHITE" CONCRETE CURB, SEE DETAIL 4 C-3.1 | C-8.1
8) NEW "WHITE" CONCRETE PATIO AREA, SEE DETAIL 7 C-3.1 | C-8.1
9) NEW BIKE RACK, SEE LANDSCAPE DRAWINGS FOR DETAIL.
10) NEW 30' WIDE AUTOMATED MOTORIZED CHAIN LINK VEHICLE SLIDING GATE WITH CONC GATE TRACK & CARD READER, SEE DETAIL 1 C-3.1 | C-8.2
11) TAPER END OF CURB DOWN AT 1 VERT / 3 HORIZ.
12) MATCH NEW CONCRETE CURB, GUTTER, AND SIDEWALK TO EXISTING WITH A NEW EXPANSION JOINT, SEE DETAIL 3 C-3.1 | C-8.1
13) MATCH NEW CURB AND GUTTER TO EXST CONC SWALE WITH A NEW EXPANSION JOINT, SEE DETAIL 3 C-3.1 | C-8.1
14) SAWCUT, REMOVE, AND REPLACE 12" WIDE STRIP OF ASPHALT PAVEMENT ALONG EDGE OF NEW PVMT, CURB OR GUTTER TO PROVIDE A SMOOTH TRANSITION, SEE DETAIL 6 C-3.1 | C-8.1
15) NEW TRASH ENCLOSURE, SEE DETAIL 2 C-3.1 | C-8.7
16) INSTALL SALVAGED CON-EX BOX AND NEW FOUNDATION PIERS, SEE DETAIL 5 C-3.1 | C-8.4
17) INSTALL NEW AUTOMATED PEDESTRIAN TURNSTILE WITH CARD READER, SEE DETAIL 1 C-3.1 | C-8.9
18) NEW CONCRETE HANDICAP SIDEWALK RAMP, SEE DETAIL 1 C-3.1 | C-8.10
19) NEW LANDSCAPE GATHERING AREA, SEE LANDSCAPE DRAWINGS.
20) INSTALL SALVAGED SATELLITE DISH AND NEW CONCRETE FOUNDATION TO MATCH EXISTING.
21) NEW AUTOMATIC GATE MOTOR OPERATOR ON 6" THICK CONC PAD PER MANUF RECOMMENDATIONS.
22) INSTALL TRUNCATED DOMES AT BOTTOM OF RAMP, SEE DETAIL 3 C-3.1 | C-8.10

LEGEND

- NEW CONCRETE PAVEMENT
- NEW CONCRETE SIDEWALK, CURB & GUTTERS.
- NEW PERVIOUS CONCRETE PAVEMENT

JBY# 0622-12

REGISTERED PROFESSIONAL ENGINEER
JONATHAN BERNHARDT
NO. 60229
EXP. 6-30-2012
CIVIL
STATE OF CALIFORNIA

JB YOUNG & ASSOCIATES, LTD
11440 Riverside Drive, Suite M
Lakeside, California 92040
(619) 448-9424
(619) 448-4690 FAX

DATE	SYM	REVISION	BY	A'PD

NATIONAL AERONAUTICS AND SPACE ADMINISTRATION
DRYDEN FLIGHT RESEARCH CENTER
EDWARDS, CA

DRAWING TITLE
PAVEMENT PLAN #1

PROJECT TITLE
FACILITIES SUPPORT CENTER BUILDING
100% FINAL DESIGN SUBMITTAL

APPROVALS		DATE
Chief, Facilities Engineering & Asset Mgmt. Office DAN CROWLEY		4/14/11
Project Requestor/Customer DAN CROWLEY		4/14/11
Facilities Project Manager GEMMA FLORES		4/14/11
Chief, Office of Protective Services JOHN ZELLMER		4/14/11
Chief – Safety, Health and Environmental Office DAN MULLEN		4/14/11
DFRC Chief Information Officer KEN NORLIN		4/14/11

DATE STRTD	11/04/10	DATE PRNTD	03/14/11
DRAWN BY	JBY	EDM-1703	
SCALE	AS NOTED	TRADE SH. No. C-3.1	
FILE NAME		SHEET No. 8 of 193	

NOTES:

1) INSTALL NEW ASPHALT PAVEMENT, SEE DETAIL 6 / C-3.2 | C-8.1
2) INSTALL NEW CONCRETE PAVEMENT, SEE DETAIL 8 / C-3.2 | C-8.1
3) INSTALL NEW STORM WATER CATCH BASIN, SEE DETAIL 4 / C-3.2 | C-8.4
   T.G. ELEV = 2279.50.
   I.E. ELEV = 2277.0
4) INSTALL NEW 8" PVC STORM WATER PIPE, SEE DETAIL 1 / C-3.2 | C-8.3
   MINIMUM SLOPE = 2%.
5) BORE NEW STORM WATER PIPE UNDER EXISTING RETAINING WALL.
6) CONNECT NEW STORM DRAIN PIPE TO EXISTING, SEE DETAIL 1 / C-3.2 | C-3.2
7) SAWCUT, REMOVE, DISPOSE, AND REPLACE ASPHALT PAVEMENT, SEE DETAIL. 6 / C-3.2 | C-8.1

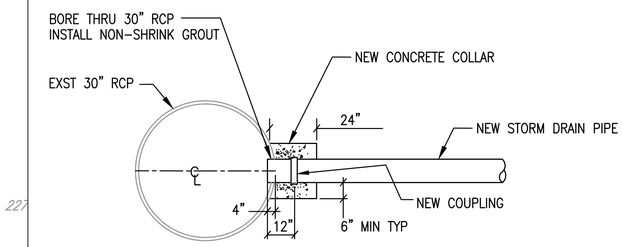

CONNECT TO 30" RCP

DETAIL 1 / C-3.2 | C-3.2
NO SCALE

LEGEND:

SEE DWG C-1 FOR DEMO LEGEND.

PAVEMENT PLAN #2

SCALE 1" = 20'

GENERAL NOTES:

1) REMOVE AND RECYCLE ALL DEMOLITION DEBRIS AT EDWARDS AIR FORCE BASE RECYCLING CENTER AT NO ADDITIONAL COST TO THE GOVERNMENT.

GRAPHIC SCALE: 1" = 20'

20' 0 20' 40' 60'

TRUE NORTH

JBY# 0622-12

REGISTERED PROFESSIONAL ENGINEER JONATHAN BERNHARDT NO. 60229 EXP. 6-30-2012 CIVIL STATE OF CALIFORNIA

JB YOUNG & ASSOCIATES, LTD
11440 Riverside Drive, Suite M
Lakeside, California 92040
(619) 448-9424
(619) 448-4690 FAX

DATE	SYM	REVISION	BY	A'PD

NATIONAL AERONAUTICS AND SPACE ADMINISTRATION
DRYDEN FLIGHT RESEARCH CENTER
EDWARDS, CA

DRAWING TITLE
PAVEMENT PLAN #2

PROJECT TITLE
FACILITIES SUPPORT CENTER BUILDING
100% FINAL DESIGN SUBMITTAL

APPROVALS	DATE
Chief, Facilities Engineering & Asset Mgmt. Office DAN CROWLEY	4/14/11
Project Requestor/Customer DAN CROWLEY	4/14/11
Facilities Project Manager GEMMA FLORES	4/14/11
Chief, Office of Protective Services JOHN ZELLMER	4/14/11
Chief – Safety, Health and Environmental Office DAN MULLEN	4/14/11
DFRC Chief Information Officer KEN NORLIN	4/14/11

DATE STRTD	11/04/10	DATE PRNTD	03/14/11
DRAWN BY	JBY	EDM-1703	
SCALE	AS NOTED	TRADE SH. No. C-3.2	
FILE NAME		SHEET No. 9 of 193	

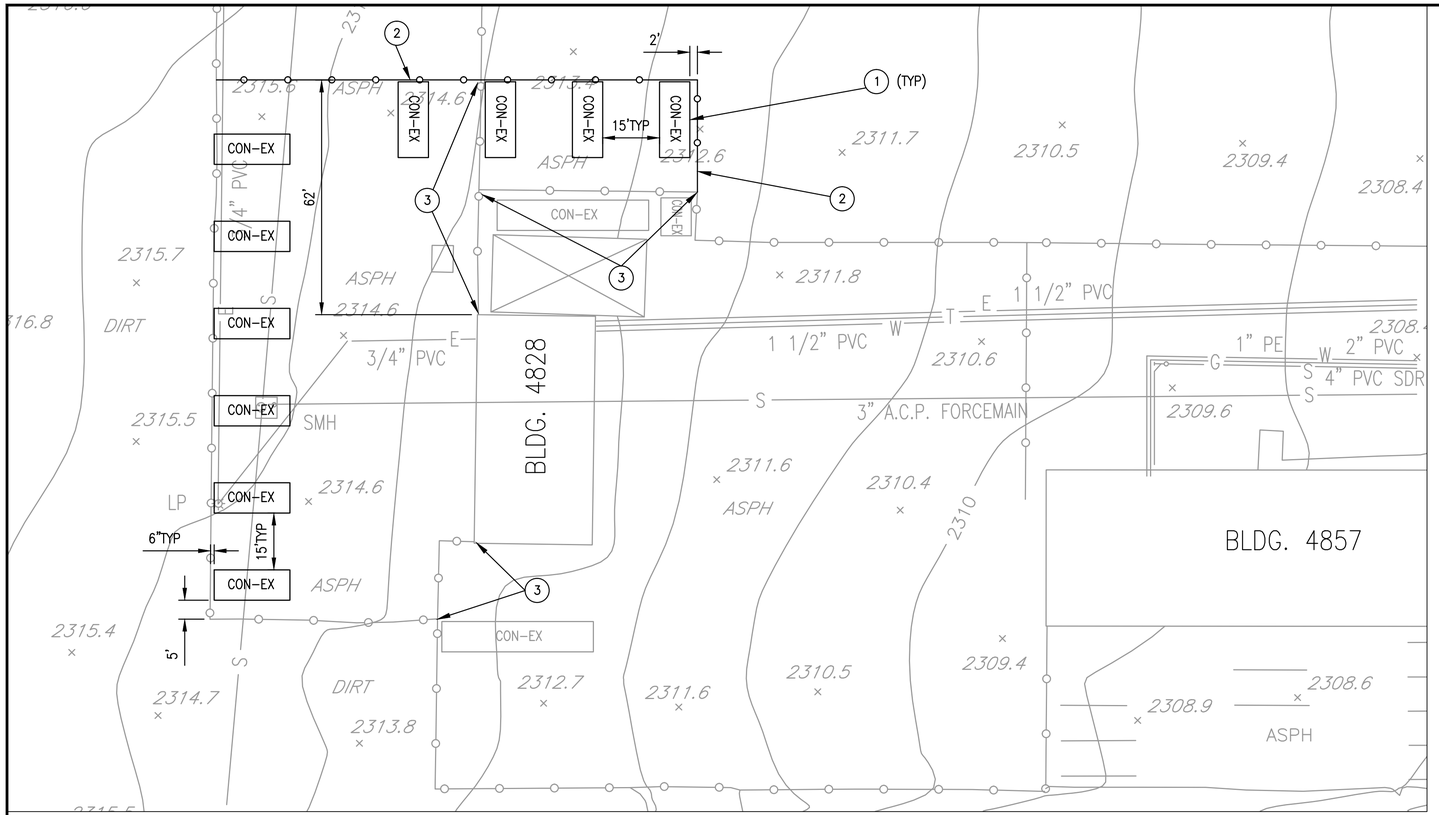

PAVEMENT PLAN #3

SCALE 1" = 20'

LEGEND:

SEE DWG C-1 FOR DEMO LEGEND.

GENERAL NOTES:

1) REMOVE AND RECYCLE ALL DEMOLITION DEBRIS AT EDWARDS AIR FORCE BASE RECYCLING CENTER AT NO ADDITIONAL COST TO THE GOVERNMENT.
2) ALL WORK SHOWN ON THIS SHEET SHALL BE PERFORMED DURING THE FINAL MONTH OF THE CONTRACT PERFORMANCE PERIOD.

(XX) NOTES:

1) INSTALL SALVAGED CON-EX BOX AND NEW FOUNDATION PIERS, SEE DETAIL 5 C-3.3 | C-8.4
2) INSTALL NEW CHAIN LINK FENCING, SEE DETAIL 5 C-3.3 | C-8.2
3) REMOVE AND DISPOSE OF EXISTING CHAIN LINK FENCING.

GRAPHIC SCALE: 1" = 20'

20' 0 20' 40' 60'

TRUE NORTH

JBY# 0622-12

REGISTERED PROFESSIONAL ENGINEER JONATHAN BERNACCHI NO. 60229 EXP. 6-30-2012 CIVIL STATE OF CALIFORNIA

JB YOUNG & ASSOCIATES, LTD
11440 Riverside Drive, Suite M
Lakeside, California 92040
(619) 448-9424
(619) 448-4690 FAX

DATE	SYM	REVISION	BY	A'PD

NATIONAL AERONAUTICS AND SPACE ADMINISTRATION
DRYDEN FLIGHT RESEARCH CENTER
EDWARDS, CA

DRAWING TITLE
PAVEMENT PLAN #3

PROJECT TITLE
FACILITIES SUPPORT CENTER BUILDING
100% FINAL DESIGN SUBMITTAL

APPROVALS		DATE
Chief, Facilities Engineering & Asset Mgmt. Office DAN CROMLEY		4/14/11
Project Requestor/Customer DAN CROMLEY		4/14/11
Facilities Project Manager GEMMA FLORES		4/14/11
Chief, Office of Protective Services JOHN ZELLMER		4/14/11
Chief - Safety, Health and Environmental Office DAN MULLEN		4/14/11
DFRC Chief Information Officer KEN NORLIN		4/14/11

DATE STRTD	11/04/10	DATE PRNTD	03/14/11
DRAWN BY	JBY	EDM-1703	
SCALE	AS NOTED	TRADE SH. No. C-3.3	
FILE NAME		SHEET No. 10 of 193	

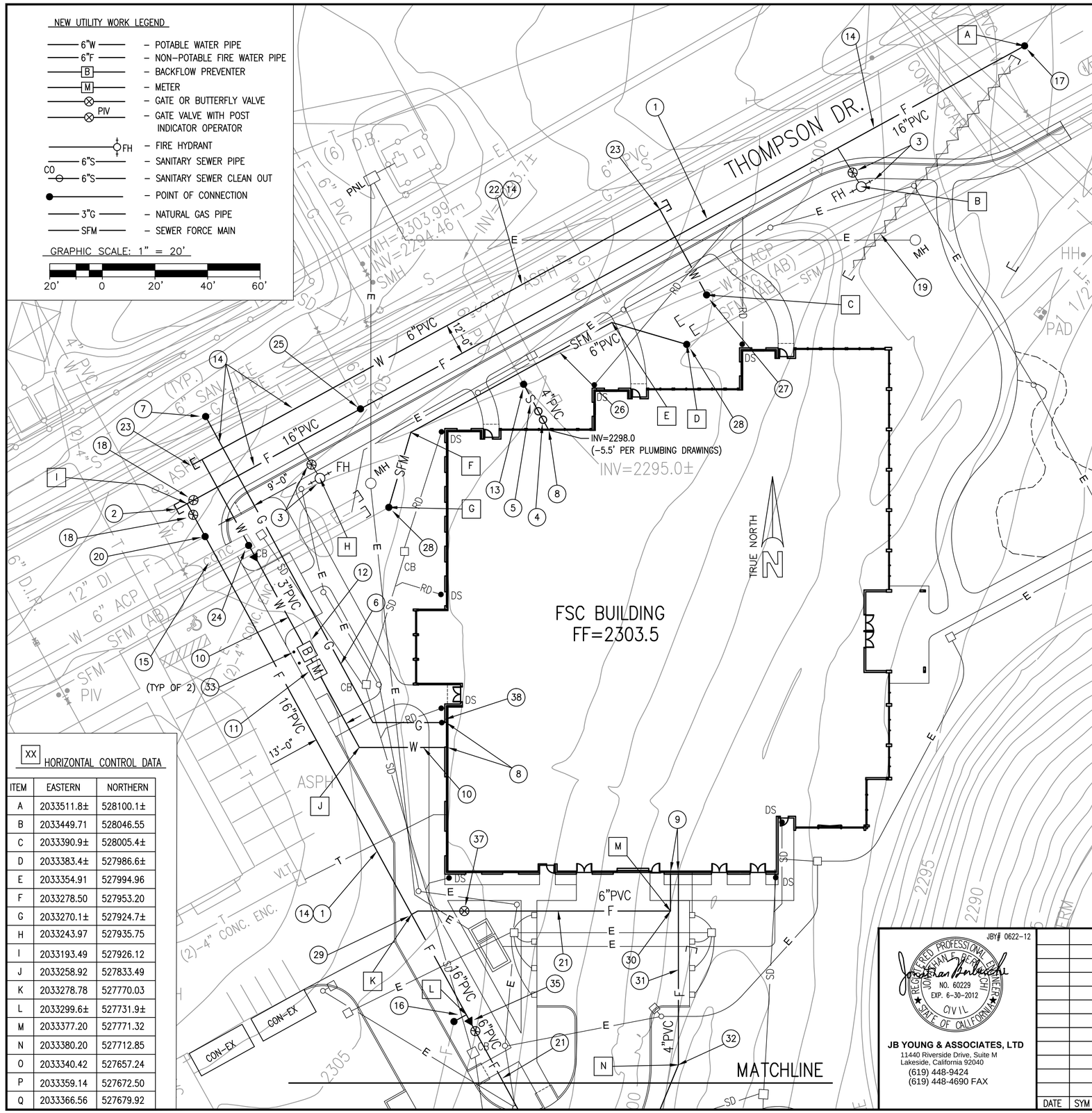

ITEM	EASTERN	NORTHERN
A	2033511.8±	528100.1±
B	2033449.71	528046.55
C	2033390.9±	528005.4±
D	2033383.4±	527986.6±
E	2033354.91	527994.96
F	2033278.50	527953.20
G	2033270.1±	527924.7±
H	2033243.97	527935.75
I	2033193.49	527926.12
J	2033258.92	527833.49
K	2033278.78	527770.03
L	2033299.6±	527731.9±
M	2033377.20	527771.32
N	2033380.20	527712.85
O	2033340.42	527657.24
P	2033359.14	527672.50
Q	2033366.56	527679.92

XX NOTES:

1) NEW FIRE WATER 16" FIRE WATER PIPE, SEE DETAIL 1 C-4.1 C-8.3 C900 PVC, CLASS 200.
2) INSTALL 16"X16" DI TEE, 16" DI BLIND FLANGE, AND THRUST BLOCKS FOR FUTURE EXTENSION, SEE DETAIL 5 C-4.1 C-8.3
3) NEW 16"x6" DI TEE, 6" GATE VALVE, 6" PVC PIPE, FIRE HYDRANT, & THRUST BLOCK, SEE DETAIL 5 C-4.1 C-8.3 2 C-4.1 C-8.4
4) INSTALL NEW 4" DOUBLE CLEANOUT, SEE DETAIL 1 C-4.1 C-8.4
5) INSTALL NEW 4" PVC SEWER PIPE, SEE DETAIL 1 C-4.1 C-8.3
6) NEW 1" PE NATURAL GAS PIPELINE, SEE DETAIL 1 C-4.1 C-8.3
7) TAP EXISTING 6" PE GAS MAIN AS REQUIRED.
8) SEE PLUMBING DRAWINGS FOR CONTINUATION.
9) SEE FIRE SUPPRESSION DRAWINGS FOR CONTINUATION.
10) INSTALL 3" PVC WATER PIPE, SEE DETAIL 1 C-4.1 C-8.3
11) INSTALL 2" WATER METER, SEE DETAIL 3 C-4.1 C-8.3
12) INSTALL 3" RPBP AND STRAINER, SEE DETAIL 4 C-4.1 C-8.3
13) CONNECT TO EXISTING 6" PVC SEWER PIPE WITH PVC PIPE REDUCER.
14) SAWCUT, REMOVE, DISPOSE, AND REPLACE ASPHALT PAVEMENT, AS REQUIRED, SEE DETAIL 6 C-4.1 C-8.1
15) SAWCUT, REMOVE, DISPOSE AND REPLACE 6" THICK CONC SWALE, AS REQUIRED. MATCH EXISTING.
16) CONNECT TO EXISTING 16" PVC PIPE WITH 16"x16" DI TEE, 45° BEND, ADAPTER COUPLING, & THRUST BLOCKS, SEE DETAIL 5 C-4.1 C-8.3
17) CONNECT TO EXISTING 16" DI PIPE W/ 22.5° BEND, ADAPTER COUPLING, & THRUST BLOCK, SEE DETAIL 5 C-4.1 C-8.3
18) INSTALL NEW 16" BFV, SEE DETAIL 2 C-4.1 C-8.3
19) ABANDON EXST U/G UTILITY PIPE IN PLACE.
20) INSTALL NEW 16" X 12" DI TEE (RJ), 12" ADAPTER COUPLING, AND THRUST BLOCK. CONNECT TO EXISTING. SEE DETAIL 5 C-4.1 C-8.3
21) NEW 6" PVC FIRE WATER PIPE, SEE DETAIL 1 C-4.1 C-8.3 C900 PVC, CLASS 200.
22) NEW 6" PVC POTABLE WATER MAIN PIPE, SEE DETAIL 1 C-4.1 C-8.3
23) INSTALL NEW 6" DI TEE (RJ) AND BLIND FLANGE FOR FUTURE WATER LINE EXTENSION.
24) INSTALL NEW 6" DI TEE, THRUST BLOCK, 6"X3" DI REDUCER & ADAPTER COUPLING. CONNECT TO EXISTING. SEE DETAIL 5 C-4.1 C-8.3
25) INSTALL NEW 16" X 6" DI TEE, 6" ADAPTER COUPLING, AND THRUST BLOCK. CONNECT TO EXISTING. SEE DETAIL 5 C-4.1 C-8.3
26) INSTALL NEW 6" PVC SEWER FORCE MAIN PIPE. SEE DETAIL 1 C-4.1 C-8.3
27) INSTALL NEW 6" 90° DI BEND AND THRUST BLOCK. CONNECT TO EXISTING. SEE DETAIL 5 C-4.1 C-8.3
28) INSTALL NEW 6" PVC 45° BEND & THRUST BLOCK (TYP OF 4). CONNECT TO EXST. SEE DETAIL 5 C-4.1 C-8.3
29) NEW 16" X 6" DI TEE, 6" 45° BEND, & THRUST BLOCK, SEE DETAIL 5 C-4.1 C-8.3
30) NEW 6" 45° DI BEND, RESTRAINED JOINT.
31) NEW 4" PVC FIRE WATER PIPE, SEE DETAIL 1 C-4.1 C-8.3 C900 PVC, CLASS 200.
32) NEW 4" 22.5° DI BEND, RESTRAINED JOINT.
33) NEW 6" ø GUARD POST, SEE DETAIL 2 C-4.1 C-8.2
34) NEW FIRE DEPARTMENT CONNECTION, SEE DETAIL 1 C-4.1 C-8.8 INSTALL DRIP VALVE MANHOLE.
35) NEW 16"X6" DI REDUCER & 6" GATE VALVE, SEE DETAIL 2 C-4.1 C-8.3
36) NEW FIRE HYDRANT, SEE DETAIL 2 C-4.1 C-8.4 AND 6" GATE VALVE
37) NEW 6" GATE VALVE & PIV, SEE DETAIL 6 C-4.1 C-8.3
38) NEW GAS METER AND REGULATOR, SEE PLUMBING DRAWINGS.

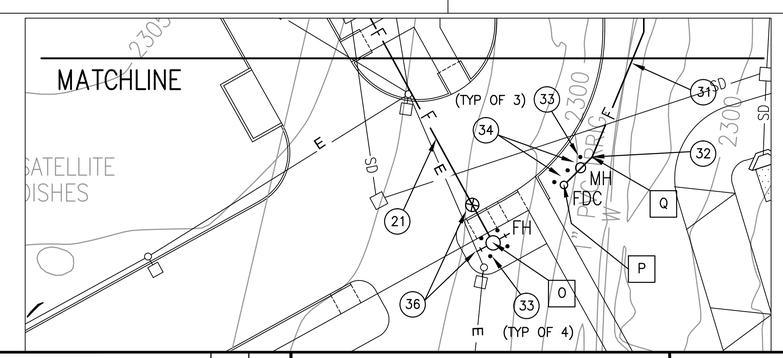

JBY# 0622-12

REGISTERED PROFESSIONAL ENGINEER JONATHAN BERKSHIRE NO. 60229 EXP. 6-30-2012 CIVIL STATE OF CALIFORNIA

JB YOUNG & ASSOCIATES, LTD
11440 Riverside Drive, Suite M
Lakeside, California 92040
(619) 448-9424
(619) 448-4690 FAX

DATE	SYM	REVISION	BY	A'PD

NATIONAL AERONAUTICS AND SPACE ADMINISTRATION
DRYDEN FLIGHT RESEARCH CENTER
EDWARDS, CA

DRAWING TITLE
UTILITY PLAN

PROJECT TITLE
FACILITIES SUPPORT CENTER BUILDING
100% FINAL DESIGN SUBMITTAL

APPROVALS	DATE
Chief, Facilities Engineering & Asset Mgmt. Office DAN CROWLEY	4/14/11
Project Requestor/Customer DAN CROWLEY	4/14/11
Facilities Project Manager GEMMA FLORES	4/14/11
Chief, Office of Protective Services JOHN ZELLMER	4/14/11
Chief – Safety, Health and Environmental Office DAN MULLEN	4/14/11
DFRC Chief Information Officer KEN NORLIN	4/14/11

DATE STRTD	11/04/10	DATE PRNTD	03/14/11
DRAWN BY	JBY	EDM-1703	
SCALE	AS NOTED	TRADE SH. No. C-4.1	
FILE NAME		SHEET No. 11 of 193	

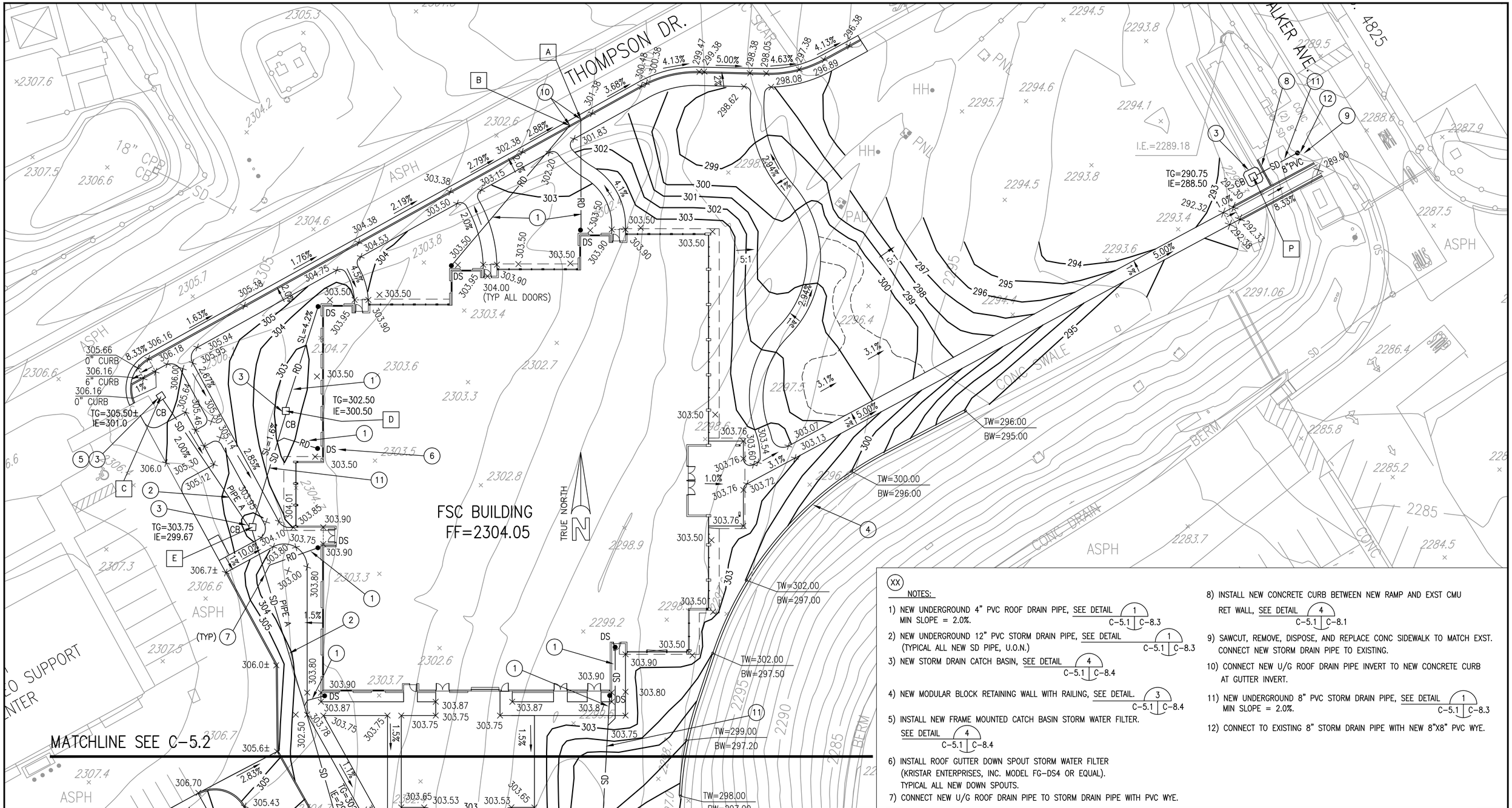

XX

NOTES:

1) NEW UNDERGROUND 4" PVC ROOF DRAIN PIPE, SEE DETAIL 1 C-5.1 | C-8.3
MIN SLOPE = 2.0%.

2) NEW UNDERGROUND 12" PVC STORM DRAIN PIPE, SEE DETAIL 1 C-5.1 | C-8.3
(TYPICAL ALL NEW SD PIPE, U.O.N.)

3) NEW STORM DRAIN CATCH BASIN, SEE DETAIL 4 C-5.1 | C-8.4

4) NEW MODULAR BLOCK RETAINING WALL WITH RAILING, SEE DETAIL. 3 C-5.1 | C-8.4

5) INSTALL NEW FRAME MOUNTED CATCH BASIN STORM WATER FILTER.
SEE DETAIL 4 C-5.1 | C-8.4

6) INSTALL ROOF GUTTER DOWN SPOUT STORM WATER FILTER
(KRISTAR ENTERPRISES, INC. MODEL FG-DS4 OR EQUAL).
TYPICAL ALL NEW DOWN SPOUTS.

7) CONNECT NEW U/G ROOF DRAIN PIPE TO STORM DRAIN PIPE WITH PVC WYE.

8) INSTALL NEW CONCRETE CURB BETWEEN NEW RAMP AND EXST CMU
RET WALL, SEE DETAIL 4 C-5.1 | C-8.1

9) SAWCUT, REMOVE, DISPOSE, AND REPLACE CONC SIDEWALK TO MATCH EXST.
CONNECT NEW STORM DRAIN PIPE TO EXISTING.

10) CONNECT NEW U/G ROOF DRAIN PIPE INVERT TO NEW CONCRETE CURB
AT GUTTER INVERT.

11) NEW UNDERGROUND 8" PVC STORM DRAIN PIPE, SEE DETAIL 1 C-5.1 | C-8.3
MIN SLOPE = 2.0%.

12) CONNECT TO EXISTING 8" STORM DRAIN PIPE WITH NEW 8"X8" PVC WYE.

GENERAL NOTES:

1) ADD 2000 FEET TO ALL NEW SPOT GRADE AND CONTOUR LABELS TO OBTAIN TRUE ELEVATIONS, U.O.N.
2) ALL SPOT GRADES ON CURBS ARE "TOP OF CURB" GRADES U.O.N.
3) SEE DRAWING C-8.8 FOR STORM DRAIN PIPE A PROFILE.

GRAPHIC SCALE: 1" = 20'

20' 0 20' 40' 60'

GRADING PLAN A

SCALE 1" = 20'

XX HORIZONTAL CONTROL DATA

SEE DRAWING C-5.2.

NEW WORK LEGEND:

X 301.28	– SPOT GRADE
RD	– U/G ROOF DRAIN PIPE.
SD HDWL	– STORM DRAIN PIPE AND CONC HEADWALL
CO	– STORM DRAIN CLEANOUT MANHOLE
2%	– FINISHED GRADE SLOPE
CB	– STORM DRAIN CATCH BASIN
TW 298.0 / BW 297.0	– TOP OF WALL & BOTTOM OF WALL ELEV

JBY# 0622-12

REGISTERED PROFESSIONAL ENGINEER
JONATHAN BERNSTEIN
NO. 60229
EXP. 6-30-2012
CIVIL
STATE OF CALIFORNIA

JB YOUNG & ASSOCIATES, LTD
11440 Riverside Drive, Suite M
Lakeside, California 92040
(619) 448-9424
(619) 448-4690 FAX

DATE	SYM	REVISION	BY	A'PD

NATIONAL AERONAUTICS AND SPACE ADMINISTRATION

DRYDEN FLIGHT RESEARCH CENTER
EDWARDS, CA

DRAWING TITLE

GRADING PLAN A

PROJECT TITLE

FACILITIES SUPPORT CENTER BUILDING
100% FINAL DESIGN SUBMITTAL

APPROVALS		DATE
Chief, Facilities Engineering & Asset Mgmt. Office DAN CROWLEY		4/14/11
Project Requestor/Customer DAN CROWLEY		4/14/11
Facilities Project Manager GEMMA FLORES		4/14/11
Chief, Office of Protective Services JOHN ZELLMER		4/14/11
Chief – Safety, Health and Environmental Office DAN MULLEN		4/14/11
DFRC Chief Information Officer KEN NORLIN		4/14/11

DATE STRTD	11/04/10	DATE PRNTD	03/14/11
DRAWN BY	JBY	EDM-1703	
SCALE	AS NOTED	TRADE SH. No. C-5.1	
FILE NAME		SHEET No. 12 of 193	

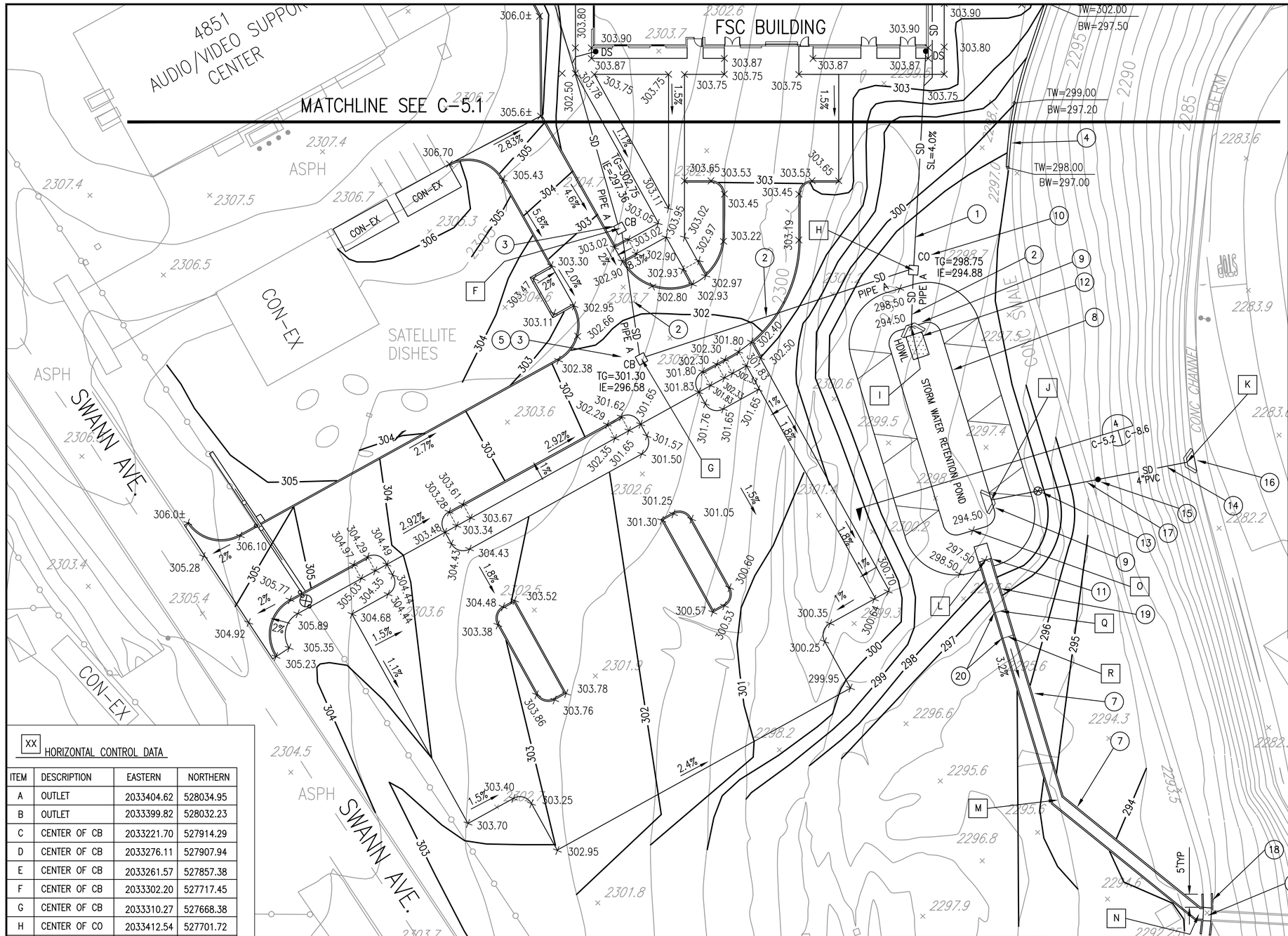

XX NOTES:

1) NEW UNDERGROUND 8" PVC STORM DRAIN PIPE, SEE DETAIL 1 C-5.2 | C-8.3
2) NEW UNDERGROUND 15" PVC STORM DRAIN PIPE, SEE DETAIL 1 C-5.2 | C-8.3
3) NEW STORM DRAIN CATCH BASIN, SEE DETAIL 4 C-5.2 | C-8.4
4) NEW MODULAR BLOCK RETAINING WALL WITH RAILING, SEE DETAIL. 3 C-5.2 | C-8.4
5) INSTALL NEW FRAME MOUNTED CATCH BASIN STORM WATER FILTER, SEE DETAIL 4 C-5.2 | C-8.4
6) SAWCUT, REMOVE, DISPOSE, AND REPLACE 4" THICK SECTION OF EXST CONC SWALE. GRADE NEW SWALE TO DRAIN TOWARDS OUTLET.
7) NEW CONCRETE OVERFLOW SWALE W/ 6" CURBS, SEE DETAIL 3 C-5.2 | C-8.6
8) NEW STORM WATER RETENTION POND, SEE DETAIL 4 C-5.2 | C-8.6
9) NEW CONCRETE HEADWALL, SEE DETAIL 1 C-5.2 | C-8.5
10) NEW STORM DRAIN CLEANOUT, SEE DETAIL 2 C-5.2 | C-8.6
11) NEW POND OVERFLOW OUTLET, SEE DETAIL 7 C-5.2 | C-8.6
12) INSTALL RIP RAP EROSION PROTECTION, SEE DETAIL 5 C-5.2 | C-8.6
13) INSTALL NEW 4" BALL VALVE, SEE DETAIL 2 C-5.2 | C-8.3
14) INSTALL NEW 4" PRESSURE RATED PVC DRAIN PIPE, SEE DETAIL 1 C-5.2 | C-8.3
MINIMUM PIPE SLOPE = 2%. MINIMUM COVER = 14"
15) INSTALL NEW 4" PVC VERTICAL BEND AS REQUIRED.
16) CONNECT TO EXISTING CONCRETE SWALE, SEE DETAIL 6 C-5.2 | C-8.6
INSTALL NEW CONC HEADWALL.
17) SAWCUT, REMOVE, DISPOSE & REPLACE CONC BROW DITCH TO MATCH EXST.
18) INSTALL NEW CONCRETE CURB UP AGAINST EXST CONC SWALE, SEE DETAIL 4 C-5.2 | C-8.1
19) NEW CONCRETE OVERFLOW SWALE W/ 12" CURBS, SEE DETAIL 3 C-5.2 | C-8.6
20) TAPER SWALE CURB FROM 12" HIGH TO 6" HIGH

XX HORIZONTAL CONTROL DATA

ITEM	DESCRIPTION	EASTERN	NORTHERN
A	OUTLET	2033404.62	528034.95
B	OUTLET	2033399.82	528032.23
C	CENTER OF CB	2033221.70	527914.29
D	CENTER OF CB	2033276.11	527907.94
E	CENTER OF CB	2033261.57	527857.38
F	CENTER OF CB	2033302.20	527717.45
G	CENTER OF CB	2033310.27	527668.38
H	CENTER OF CO	2033412.54	527701.72
I	OUTLET CENTER	2033411.72	527680.43
J	INLET CENTER	2033441.80	527615.34
K	OUTLET CENTER	2033515.51	527629.78
L	CL OF SWALE	2033439.60	527592.78
M	CL OF SWALE	2033466.64	527502.54
N	CL OF SWALE	2033519.83	527459.55
O	CL OF POND	2033434.82	527603.84
P	CENTER OF CB	2033697.48	528009.90
Q	CL OF SWALE	2033445.22	527573.55
R	CL OF SWALE	2033448.11	527563.98

TRUE NORTH

GRADING PLAN B

SCALE 1" = 20'

NEW WORK LEGEND:

SEE DRAWING C-5.1

GENERAL NOTES:

1) ADD 2000 FEET TO ALL NEW SPOT GRADE AND CONTOUR LABELS TO OBTAIN TRUE ELEVATIONS, U.O.N.
2) ALL SPOT GRADES ON CURBS ARE "TOP OF CURB" GRADES U.O.N.
3) SEE DRAWING C-8.8 FOR STORM DRAIN PIPE A PROFILE.

GRAPHIC SCALE: 1" = 20'

20' 0 20' 30' 60'

JBY# 0622-12

REGISTERED PROFESSIONAL ENGINEER JONATHAN BENJAMIN CHRISTENSEN NO. 60229 EXP. 6-30-2012 CIVIL STATE OF CALIFORNIA

JB YOUNG & ASSOCIATES, LTD
11440 Riverside Drive, Suite M
Lakeside, California 92040
(619) 448-9424
(619) 448-4690 FAX

DATE	SYM	REVISION	BY	A'PD

NATIONAL AERONAUTICS AND SPACE ADMINISTRATION
DRYDEN FLIGHT RESEARCH CENTER
EDWARDS, CA

DRAWING TITLE
GRADING PLAN B

PROJECT TITLE
FACILITIES SUPPORT CENTER BUILDING
100% FINAL DESIGN SUBMITTAL

APPROVALS	DATE
Chief, Facilities Engineering & Asset Mgmt. Office DAN CROWLEY	4/14/11
Project Requestor/Customer DAN CROWLEY	4/14/11
Facilities Project Manager GEMMA FLORES	4/14/11
Chief, Office of Protective Services JOHN ZELLMER	4/14/11
Chief – Safety, Health and Environmental Office DAN MULLEN	4/14/11
DFRC Chief Information Officer KEN NORLIN	4/14/11

DATE STRTD	11/04/10	DATE PRNTD	03/14/11
DRAWN BY	JBY	EDM-1703	
SCALE	AS NOTED	TRADE SH. No. C-5.2	
FILE NAME		SHEET No. 13 of 193	

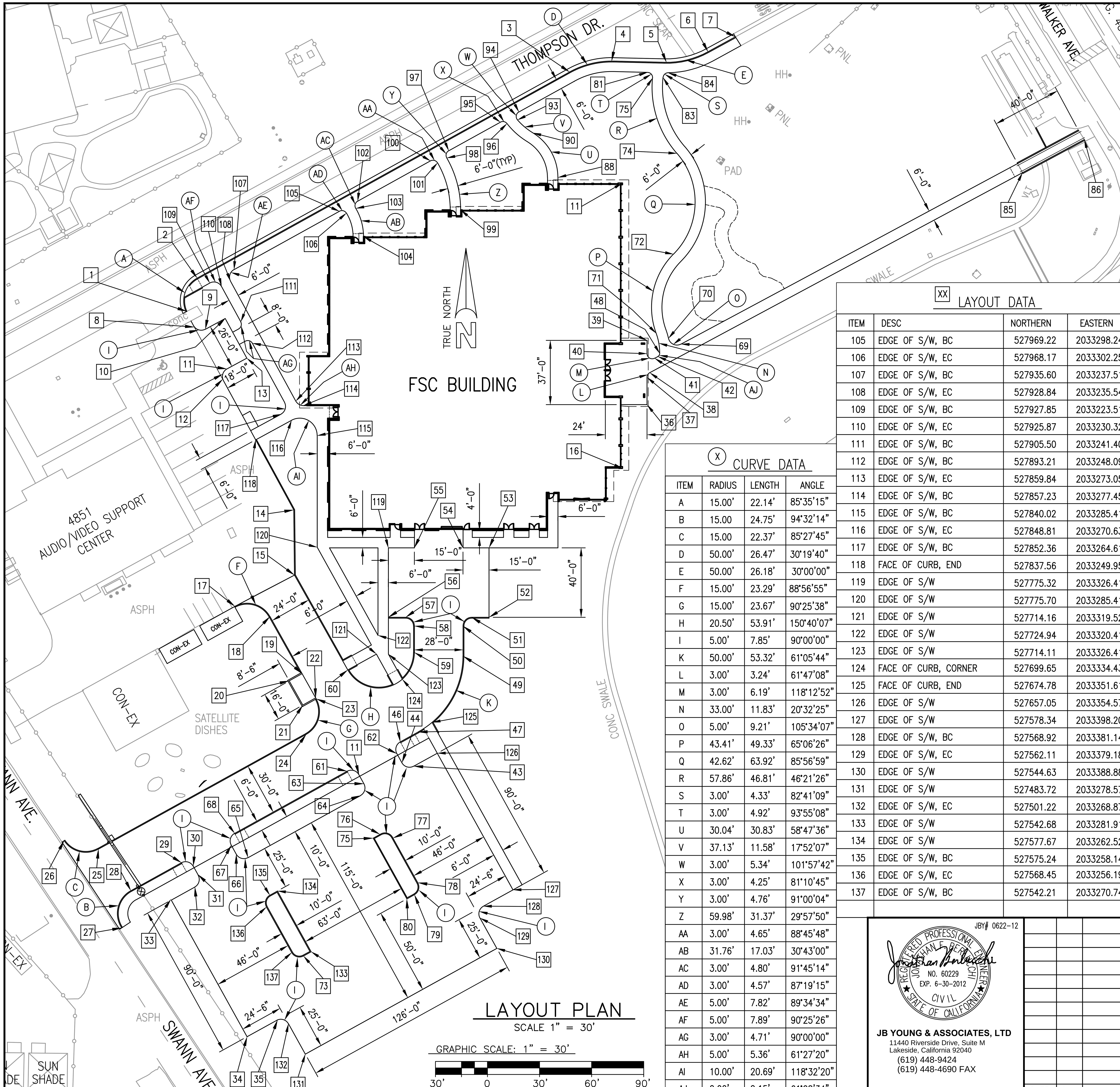

LAYOUT PLAN

SCALE 1" = 30'

GRAPHIC SCALE: 1" = 30'

30' 0 30' 60' 90'

(X) CURVE DATA

ITEM	RADIUS	LENGTH	ANGLE
A	15.00'	22.14'	85°35'15"
B	15.00	24.75'	94°32'14"
C	15.00	22.37'	85°27'45"
D	50.00'	26.47'	30°19'40"
E	50.00'	26.18'	30°00'00"
F	15.00'	23.29'	88°56'55"
G	15.00'	23.67'	90°25'38"
H	20.50'	53.91'	150°40'07"
I	5.00'	7.85'	90°00'00"
K	50.00'	53.32'	61°05'44"
L	3.00'	3.24'	61°47'08"
M	3.00'	6.19'	118°12'52"
N	33.00'	11.83'	20°32'25"
O	5.00'	9.21'	105°34'07"
P	43.41'	49.33'	65°06'26"
Q	42.62'	63.92'	85°56'59"
R	57.86'	46.81'	46°21'26"
S	3.00'	4.33'	82°41'09"
T	3.00'	4.92'	93°55'08"
U	30.04'	30.83'	58°47'36"
V	37.13'	11.58'	17°52'07"
W	3.00'	5.34'	101°57'42"
X	3.00'	4.25'	81°10'45"
Y	3.00'	4.76'	91°00'04"
Z	59.98'	31.37'	29°57'50"
AA	3.00'	4.65'	88°45'48"
AB	31.76'	17.03'	30°43'00"
AC	3.00'	4.80'	91°45'14"
AD	3.00'	4.57'	87°19'15"
AE	5.00'	7.82'	89°34'34"
AF	5.00'	7.89'	90°25'26"
AG	3.00'	4.71'	90°00'00"
AH	5.00'	5.36'	61°27'20"
AI	10.00'	20.69'	118°32'20"
AJ	2.00'	2.15'	61°28'34"

[XX] LAYOUT DATA

ITEM	DESC	NORTHERN	EASTERN
105	EDGE OF S/W, BC	527969.22	2033298.24
106	EDGE OF S/W, EC	527968.17	2033302.25
107	EDGE OF S/W, BC	527935.60	2033237.51
108	EDGE OF S/W, EC	527928.84	2033235.54
109	EDGE OF S/W, BC	527927.85	2033223.51
110	EDGE OF S/W, EC	527925.87	2033230.32
111	EDGE OF S/W, BC	527905.50	2033241.40
112	EDGE OF S/W, BC	527893.21	2033248.09
113	EDGE OF S/W, EC	527859.84	2033273.059
114	EDGE OF S/W, BC	527857.23	2033277.45
115	EDGE OF S/W, BC	527840.02	2033285.41
116	EDGE OF S/W, EC	527848.81	2033270.63
117	EDGE OF S/W, BC	527852.36	2033264.61
118	FACE OF CURB, END	527837.56	2033249.95
119	EDGE OF S/W	527775.32	2033326.41
120	EDGE OF S/W	527775.70	2033285.41
121	EDGE OF S/W	527714.16	2033319.52
122	EDGE OF S/W	527724.94	2033320.41
123	EDGE OF S/W	527714.11	2033326.41
124	FACE OF CURB, CORNER	527699.65	2033334.43
125	FACE OF CURB, END	527674.78	2033351.61
126	EDGE OF S/W	527657.05	2033354.57
127	EDGE OF S/W	527578.34	2033398.20
128	EDGE OF S/W, BC	527568.92	2033381.14
129	EDGE OF S/W, EC	527562.11	2033379.18
130	EDGE OF S/W	527544.63	2033388.88
131	EDGE OF S/W	527483.72	2033278.57
132	EDGE OF S/W, EC	527501.22	2033268.87
133	EDGE OF S/W	527542.68	2033281.91
134	EDGE OF S/W	527577.67	2033262.52
135	EDGE OF S/W, BC	527575.24	2033258.14
136	EDGE OF S/W, EC	527568.45	2033256.19
137	EDGE OF S/W, BC	527542.21	2033270.74

ITEM	DESC	NORTHERN	EASTERN	ITEM	DESC	NORTHERN	EASTERN
53	FACE OF CURB, POB	527775.32	2033384.41	1	FACE OF CURB, BC	527911.34	2033209.87
54	S/W ANGLE POINT	527775.32	2033369.41	2	FACE OF CURB, EC	527930.70	2033216.25
55	FACE OF CURB, EC	527775.32	2033341.41	3	FACE OF CURB, BC	528049.45	2033430.82
56	FACE OF CURB, POB	527735.32	2033326.41	4	FACE OF CURB, EC	528055.69	2033456.22
57	FACE OF CURB, BC	527735.32	2033336.41	5	FACE OF CURB, BC	528054.99	2033485.41
58	FACE OF CURB, EC	527730.32	2033341.41	6	FACE OF CURB, EC	528061.09	2033510.56
59	FACE OF CURB, BC	527713.27	2033341.33	7	FACE OF CURB, END CURB	528069.68	2033526.28
60	FACE OF CURB, PCR	527705.02	2033303.04	8	FACE OF CURB, BC	527902.52	2033214.72
61	FACE OF CURB, CURVE POINT	527646.66	2033302.64	9	FACE OF CURB, EC	527901.25	2033221.01
62	FACE OF CURB, CURVE POINT	527644.70	2033309.43	10	FACE OF CURB, ANGLE POINT	527907.46	2033232.43
63	FACE OF CURB, CURVE POINT	527939.44	2033312.33	11	BLDG CORNER	527985.47	2033461.24
64	FACE OF CURB, CURVE POINT	527632.65	2033310.37	12	FACE OF CURB, EC	527871.63	2033231.43
65	FACE OF CURB, CURVE POINT	527596.88	2033245.59	13	FACE OF CURB, ANGLE POINT	527884.56	2033244.88
66	FACE OF CURB, CURVE POINT	527598.84	2033238.80	14	FACE OF CURB, ANGLE POINT	527797.18	2033271.92
67	FACE OF CURB, CURVE POINT	527604.09	2033235.90	15	FACE OF CURB, ANGLE POINT	527759.65	2033272.34
68	FACE OF CURB, CURVE POINT	527610.89	2033237.86	16	BLDG CORNER	527821.16	2033461.24
69	EDGE OF S/W, BC	527892.70	2033495.02	17	FACE OF CURB, BC	527741.65	2033238.04
70	EDGE OF S/W, EC	527896.01	2033487.77	18	FACE OF CURB, EC	527735.79	2033258.22
71	EDGE OF S/W, BC	527898.89	2033480.71	19	FACE OF CURB, ANGLE POINT	527706.66	2033274.59
72	EDGE OF S/W, EC	527944.53	2033490.68	20	FACE OF CURB, ANGLE POINT	527702.50	2033267.18
73	EDGE OF S/W, EC	527540.26	2033277.54	21	FACE OF CURB, ANGLE POINT	527688.55	2033275.01
74	EDGE OF S/W, EC	528002.60	2033492.60	22	FACE OF CURB, ANGLE POINT	527692.71	2033282.42
75	EDGE OF S/W, BC	528045.95	2033478.61	23	FACE OF CURB, BC	527688.35	203328487
76	FACE OF CURB, ANGLE POINT	527608.12	2033317.67	24	FACE OF CURB, EC	527667.87	2033279.05
77	FACE OF CURB, CURVE POINT	527608.59	2033329.08	25	FACE OF CURB, BC	527601.81	2033159.39
78	FACE OF CURB, CURVE POINT	527582.36	2033343.38	26	FACE OF CURB, BC	527606.67	2033139.62
79	FACE OF CURB, CURVE POINT	527575.56	2033341.43	27	FACE OF CURB, BC	527556.45	2033172.79
80	FACE OF CURB, ANGLE POINT	527573.13	2033337.06	28	FACE OF CURB, EC	52577.85	2033178.06
81	EDGE OF S/W, EC	528049.22	2033475.69	29	FACE OF CURB, CURVE POINT	527593.97	2033207.22
82	C.L. OF BLDG EAST ENTRANCE	527877.65	2033451.41	30	FACE OF CURB, CURVE POINT	527592.01	2033214.01
83	EDGE OF S/W, BC	528046.32	2033484.65	31	FACE OF CURB, CURVE POINT	527587.20	2033216.67
84	EDGE OF S/W, EC	528048.99	2033487.58	32	FACE OF CURB, CURVE POINT	527579.96	2033214.95
85	FACE OF CURB, BEGIN RAMP	527991.42	2033691.70	33	FACE OF CURB, ANGLE POINT	527572.54	2033201.50
86	FACE OF CURB, END RAMP	528010.54	2033727.34	34	FACE OF CURB, ANGLE POINT	527493.01	2033245.02
87	FACE OF CURB, CURVE POINT	527610.10	2033322.28	35	FACE OF CURB, BC	527503.17	2033262.07
88	EDGE OF S/W, EC	527988.70	2033424.08	36	EDGE OF S/W	527857.85	2033475.41
89	C.L. S/W INTERSECTION	527713.34	2033323.41	37	EDGE OF S/W, BC	527873.58	2033475.41
90	EDGE OF S/W, BC	528014.39	2033409.60	38	EDGE OF S/W, EC	527876.22	2033476.99
91	C.L. S/W INTERSECTION	527921.48	2033539.90	39	EDGE OF S/W	527894.84	2033475.41
92	C.L. S/W INTERSECTION	527928.88	2033554.10	40	EDGE OF S/W, BC	527887.20	2033475.41
93	EDGE OF S/W, EC	528021.83	2033400.78	41	EDGE OF S/W, EC	527884.55	2033479.83
94	EDGE OF S/W, BC	528026.42	2033401..60	42	EDGE OF S/W, BC	527885.55	2033481.69
95	EDGE OF S/W, EC	528020.51	2033390.93	43	FACE OF CURB, BC	527649.57	2033341.01
96	EDGE OF S/W, BC	528019.73	2033394.75	44	FACE OF CURB, EC	527651.53	2033334.22
97	EDGE OF S/W, EC	528004.06	2033361.21	45	FACE OF CURB, BC	527656.78	2033331.31
98	EDGE OF S/W, BC	527999.94	2033360.06	46	FACE OF CURB, EC	527663.58	2033333.27
99	EDGE OF S/W, EC	527969.98	2033368.08	47	FACE OF CURB, EC	527669.24	2033343.58
100	EDGE OF S/W, BC	527998.25	2033350.70	48	EDGE OF S/W, EC	527887.30	2033482.74
101	EDGE OF S/W, EC	527997.14	2033354.75	49	FACE OF CURB, BC	527710.83	2033369.36
102	EDGE OF S/W, BC	527975.03	2033308.75	50	FACE OF CURB, EC	527730.32	2033369.41
103	EDGE OF S/W, EC	527970.87	2033307.62	51	FACE OF CURB, BC	527735.32	2033374.41
104	EDGE OF S/W, BC	527954.65	2033312.08	52	FACE OF CURB ANGLE POINT	527735.32	2033384.41

JBY# 0622-12

REGISTERED PROFESSIONAL ENGINEER
JONATHAN E. BERLUCCHI
NO. 60229
EXP. 6-30-2012
CIVIL
STATE OF CALIFORNIA

JB YOUNG & ASSOCIATES, LTD
11440 Riverside Drive, Suite M
Lakeside, California 92040
(619) 448-9424
(619) 448-4690 FAX

DATE	SYM	REVISION	BY	A'PD

NATIONAL AERONAUTICS AND SPACE ADMINISTRATION

DRYDEN FLIGHT RESEARCH CENTER
EDWARDS, CA

DRAWING TITLE

LAYOUT PLAN

PROJECT TITLE

FACILITIES SUPPORT CENTER BUILDING
100% FINAL DESIGN SUBMITTAL

APPROVALS	DATE
Chief, Facilities Engineering & Asset Mgmt. Office DAN CROWLEY	4/14/11
Project Requestor/Customer DAN CROWLEY	4/14/11
Facilities Project Manager GEMMA FLORES	4/14/11
Chief, Office of Protective Services JOHN ZELLMER	4/14/11
Chief – Safety, Health and Environmental Office DAN MULLEN	4/14/11
DFRC Chief Information Officer KEN NORLIN	4/14/11

DATE STRTD	11/04/10	DATE PRNTD	03/14/11
DRAWN BY	JBY		EDM-1703
SCALE	AS NOTED	TRADE SH. No. C-6.1	SHEET No. 14 of 193
FILE NAME			

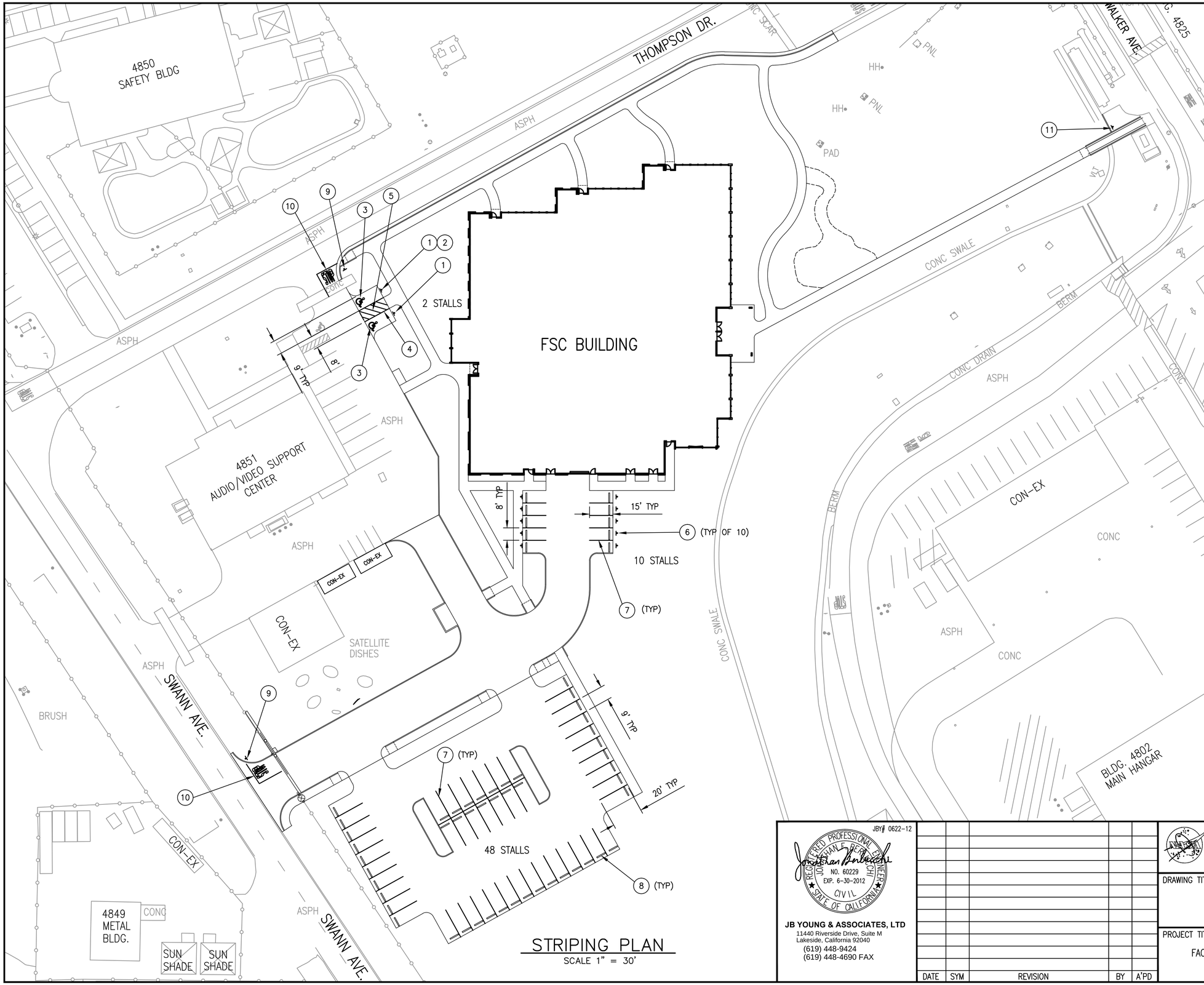

STRIPING PLAN
SCALE 1" = 30'

(XX) NOTES:

1) NEW HANDICAP PARKING SIGN, SEE DETAIL 1 C-7.1 | C-8.6
2) NEW VAN ACCESSIBLE PARKING SIGN, SEE DETAIL 1 C-7.1 | C-8.6
3) NEW HANDICAP PARKING PAINTED SYMBOL, SEE DETAIL 1 C-7.1 | C-8.6
4) NEW BLUE PAINTED 4" WIDE STRIPE.
5) NEW BLUE PAINTED 4" WIDE STRIPE AT 45° AND 36" ON CENTER.
6) NEW ELECTRIC VEHICLE PARKING SIGN, SEE DETAIL 5 C-7.1 | C-8.5
7) NEW WHITE PAINTED 4" WIDE STRIPE.
8) NEW PRE-CAST CONCRETE WHEEL STOP, SEE DETAIL 2 C-7.1 | C-8.5
9) NEW STOP SIGN, SEE DETAIL 6 C-7.1 | C-8.5
10) NEW PAINTED STOP BAR AND TEXT, SEE DETAIL 4 C-7.1 | C-8.5
11) INSTALL SALVAGED METAL SIGN AND POST. INSTALL NEW CONC FOUNDATION.

TRUE NORTH

GRAPHIC SCALE: 1" = 30'
30' 0 30' 60' 90'

JBY# 0622-12

REGISTERED PROFESSIONAL ENGINEER
JONATHAN BERNSTEIN CHU
NO. 60229
EXP. 6-30-2012
CIVIL
STATE OF CALIFORNIA

JB YOUNG & ASSOCIATES, LTD
11440 Riverside Drive, Suite M
Lakeside, California 92040
(619) 448-9424
(619) 448-4690 FAX

DATE	SYM	REVISION	BY	A'PD

NATIONAL AERONAUTICS AND SPACE ADMINISTRATION
DRYDEN FLIGHT RESEARCH CENTER
EDWARDS, CA

DRAWING TITLE
STRIPING PLAN

PROJECT TITLE
FACILITIES SUPPORT CENTER BUILDING
100% FINAL DESIGN SUBMITTAL

APPROVALS		DATE
Chief, Facilities Engineering & Asset Mgmt. Office DAN CROWLEY		4/14/11
Project Requestor/Customer DAN CROWLEY		4/14/11
Facilities Project Manager GEMMA FLORES		4/14/11
Chief, Office of Protective Services JOHN ZELLMER		4/14/11
Chief – Safety, Health and Environmental Office DAN MULLEN		4/14/11
DFRC Chief Information Officer KEN NORLIN		4/14/11

DATE STRTD	11/04/10	DATE PRNTD	03/14/11
DRAWN BY	JBY	EDM-1703	
SCALE	AS NOTED	TRADE SH. No. C-7.1	
FILE NAME		SHEET No. 15 of 193	

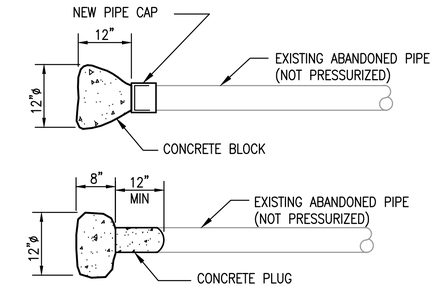

NOTES:

1) ALL ABANDONED PIPING SHALL BE CAPPED OR PLUGGED.

CAP EXST ABANDONED PIPE

DETAIL 1 — NO SCALE — C-2.1 | C-8.1 — C-2.2

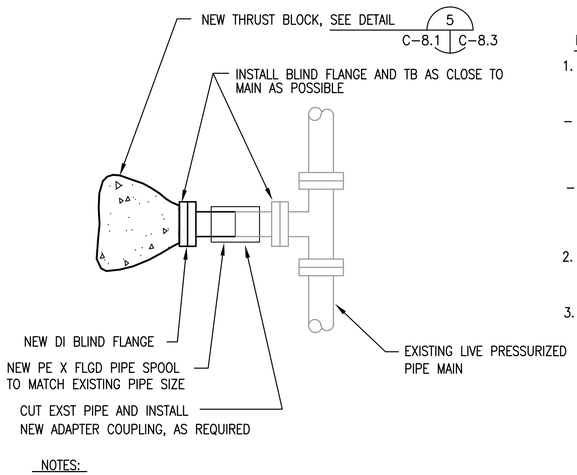

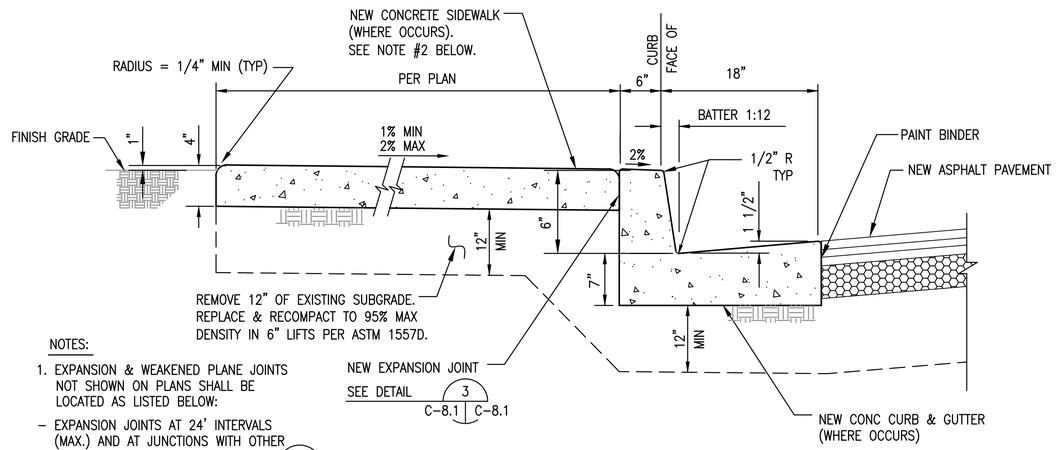

NOTES:

1. EXPANSION & WEAKENED PLANE JOINTS NOT SHOWN ON PLANS SHALL BE LOCATED AS LISTED BELOW:
   - EXPANSION JOINTS AT 24' INTERVALS (MAX.) AND AT JUNCTIONS WITH OTHER WALKS AND SLABS. SEE DETAIL 3 C-8.1 | C-8.1
   - WEAKENED PLANE JOINTS AT 6' INTERVALS (MAX). SEE DETAIL 3 C-8.1 | C-8.1
2. NEW SIDEWALK PANEL FINISH SHALL ALTERNATE BETWEEN "LIGHT BROOM FINISH" AND "MEDIUM ROCK SALT FINISH". MATCH EXISTING DRYDEN SIDEWALK FINISH PATTERNS.
3. NEW PVMT SOLAR REFLECTIVE INDEX (SDR) SHALL BE GREATER THAN 29.0.

NEW SIDEWALK AND 6" CONC CURB & GUTTER

DETAIL 2 — NO SCALE — C-3.1 | C-8.1

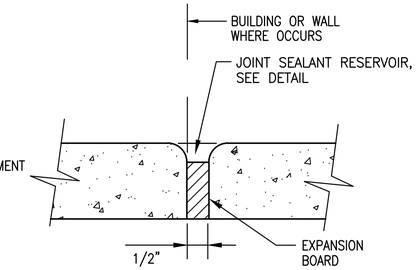

EXPANSION JOINT

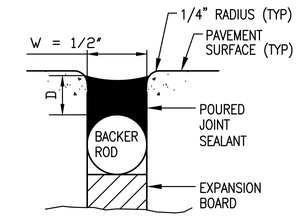

JOINT SEALANT RESERVOIR

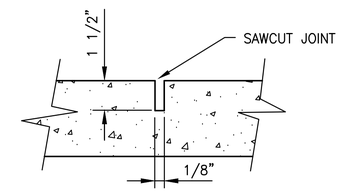

WEAKENED PLANE JOINT

NOTES:

1) W = WIDTH OF SEALANT RESERVOIR.
2) D = DEPTH OF SEALANT = 0.5 X W FOR SILICONE SEALANT.
3) DIAMETER OF BACKER ROD = W + 1/8".
4) TOP OF SEALANT SHALL BE 1/4" TO 1/16" BELOW TOP OF PVMT.

CONCRETE PAVEMENT CONTROL JOINTS

DETAIL 3 — NO SCALE — C-8.1 | C-8.1 — C-8.6 C-8.2 C-8.9 C-8.4 C-3.1

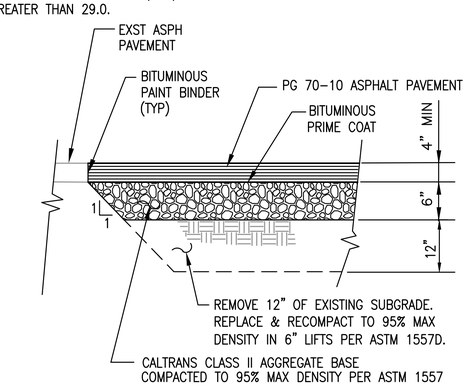

NEW ASPHALT PAVEMENT

DETAIL 6 — NO SCALE — C-3.2 C-3.1 | C-8.1 — C-4.1

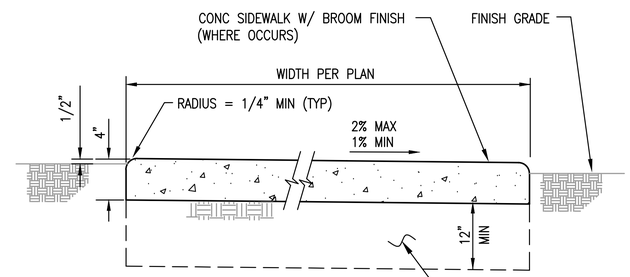

NOTES:

1) EXPANSION & WEAKENED PLANE JOINTS NOT SHOWN ON PLANS SHALL BE LOCATED AS LISTED BELOW:
   - EXPANSION JOINTS AT 24' INTERVALS (MAX.) AND AT JUNCTIONS WITH OTHER WALKS AND SLABS. SEE DETAIL 3 C-8.1 | C-8.1
   - WEAKENED PLANE JOINTS AT 6' INTERVALS (MAX). SEE DETAIL 3 C-8.1 | C-8.1
2) MAXIMUM SLOPE OF SIDEWALK WALKING PATH = 5%.
3) NEW SIDEWALK PANEL FINISH SHALL ALTERNATE BETWEEN "LIGHT BROOM FINISH" AND "MEDIUM ROCK SALT FINISH". MATCH EXISTING DRYDEN SIDEWALK FINISH PATTERNS.
4) NEW PVMT SOLAR REFLECTIVE INDEX (SDR) SHALL BE GREATER THAN 29.0.

NEW CONCRETE SIDEWALK / PATIO

DETAIL 7 — NO SCALE — C-3.1 | C-8.1

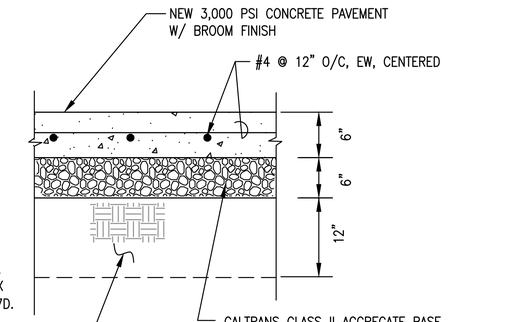

NOTES:

1. INSTALL EXPANSION & WEAKENED PLANE JOINTS PER JOINT PLAN ON DRAWING C-8.9.
2. NEW PVMT SOLAR REFLECTIVE INDEX (SDR) SHALL BE GREATER THAN 29.0.

NEW CONCRETE DRIVEWAY PAVEMENT

DETAIL 8 — NO SCALE — C-3.1 | C-8.1 — C-3.2

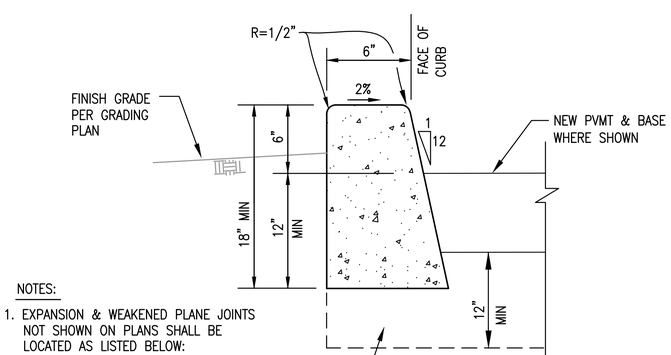

NOTES:

1. EXPANSION & WEAKENED PLANE JOINTS NOT SHOWN ON PLANS SHALL BE LOCATED AS LISTED BELOW:
   - EXPANSION JOINTS AT 24' INTERVALS (MAX.) AND AT JUNCTIONS WITH OTHER WALKS AND SLABS. SEE DETAIL 3 C-8.1 | C-8.1
   - WEAKENED PLANE JOINTS AT 6' INTERVALS (MAX). SEE DETAIL 3 C-8.1 | C-8.1
2. NEW PVMT SOLAR REFLECTIVE INDEX (SDR) SHALL BE GREATER THAN 29.0.

6" CONCRETE CURB

DETAIL 4 — NO SCALE — C-5.1 C-3.1 | C-8.1 — C-5.2

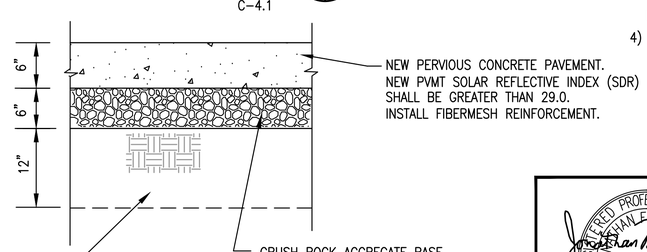

NOTES:

1. INSTALL WEAKENED PLANE JOINTS PER JOINT PLAN ON DRAWING C-8.9.

NEW PERVIOUS CONCRETE PARKING LOT

DETAIL 5 — NO SCALE — C-3.1 | C-8.1

JBY# 0622-12

REGISTERED PROFESSIONAL ENGINEER — JONATHAN BINKLEY — NO. 60229 — EXP. 6-30-2012 — CIVIL — STATE OF CALIFORNIA

JB YOUNG & ASSOCIATES, LTD
11440 Riverside Drive, Suite M
Lakeside, California 92040
(619) 448-9424
(619) 448-4690 FAX

DATE	SYM	REVISION	BY	A'PD

NATIONAL AERONAUTICS AND SPACE ADMINISTRATION

DRYDEN FLIGHT RESEARCH CENTER
EDWARDS, CA

DRAWING TITLE

CIVIL DETAILS

PROJECT TITLE

FACILITIES SUPPORT CENTER BUILDING
100% FINAL DESIGN SUBMITTAL

APPROVALS	DATE
Chief, Facilities Engineering & Asset Mgmt. Office — DAN CROWLEY	4/14/11
Project Requestor/Customer — DAN CROWLEY	4/14/11
Facilities Project Manager — GEMMA FLORES	4/14/11
Chief, Office of Protective Services — JOHN ZELLMER	4/14/11
Chief – Safety, Health and Environmental Office — DAN MULLEN	4/14/11
DFRC Chief Information Officer — KEN NORLIN	4/19/11

DATE STRTD	11/04/10	DATE PRNTD	03/14/11
DRAWN BY	JBY	EDM-1703	
SCALE	AS NOTED	TRADE SH. No.	C-8.1
FILE NAME		SHEET No.	16 of 193

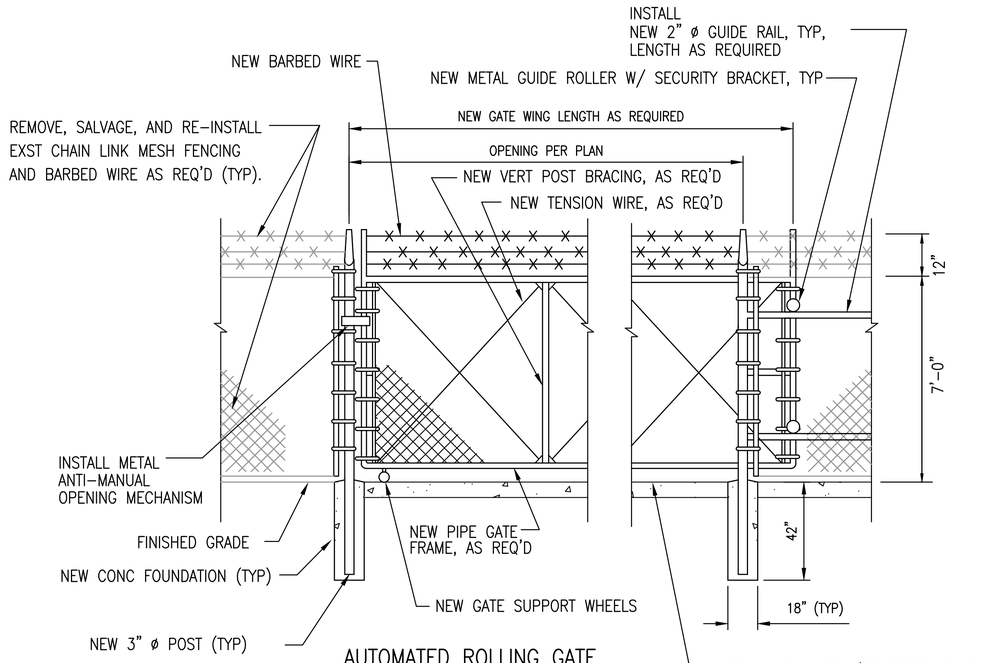

AUTOMATED ROLLING GATE

DETAIL 1
NO SCALE C-3.1 C-8.2

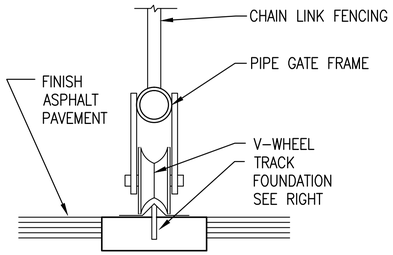

V-TRACK SECTION

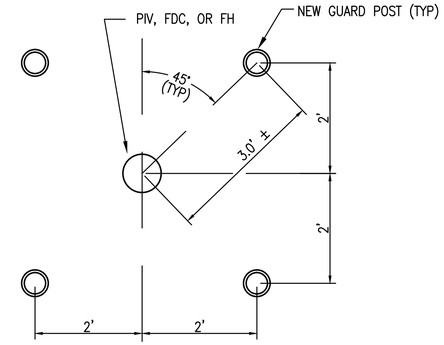

PLAN

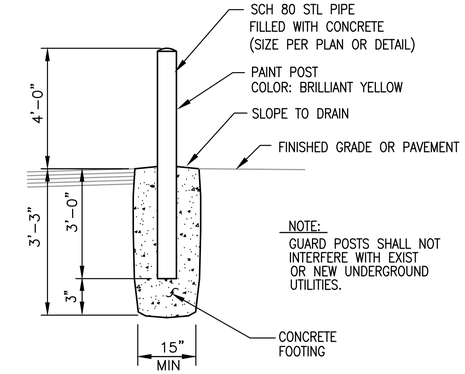

GUARD POST

SECTION

DETAIL 2
NO SCALE C-4.1 C-8.2

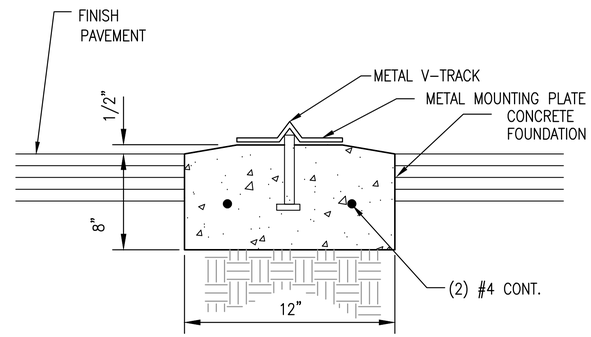

TRACK FOUNDATION

ROLLING GATE TRACK

DETAIL 3
NO SCALE C-11 C-11

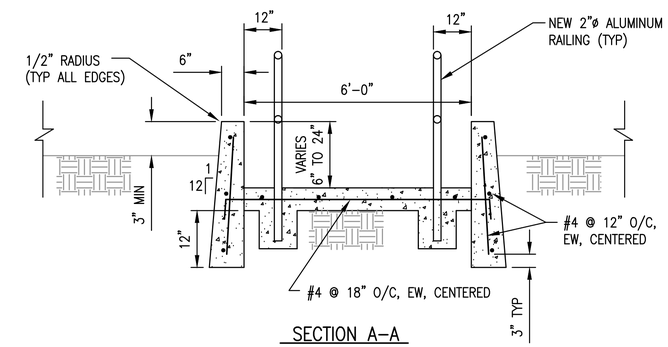

SECTION A-A

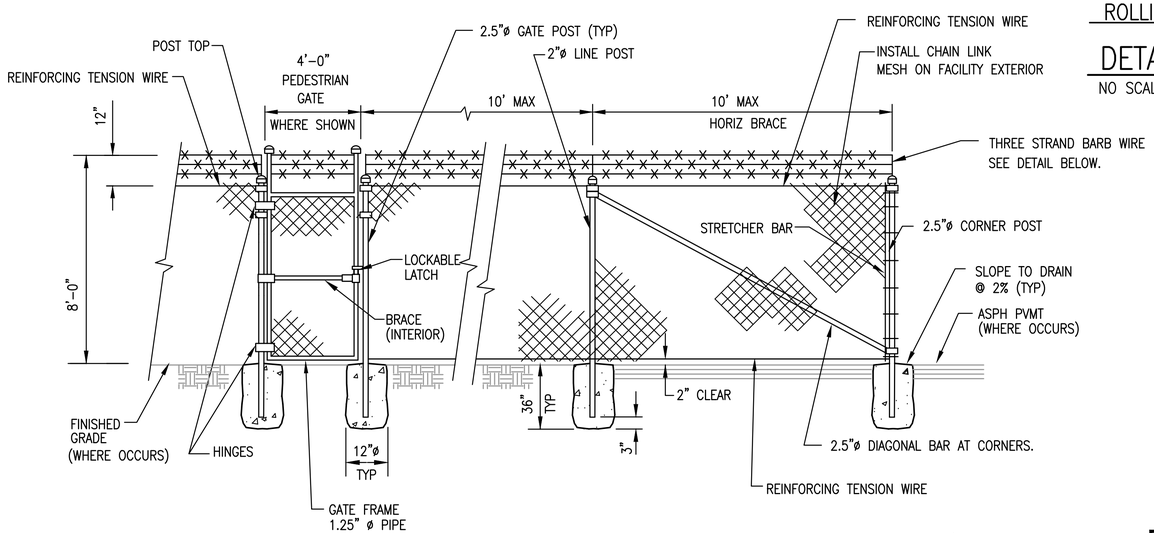

NOTES:

1. EXPANSION & WEAKENED PLANE JOINTS NOT SHOWN ON PLANS SHALL BE LOCATED AS LISTED BELOW:
   - EXPANSION JOINTS AT RAMP LANDINGS. SEE DETAIL 3 C-8.2 C-8.1
   - WEAKENED PLANE JOINTS AT 6' INTERVALS (MAX). SEE DETAIL 3 C-8.2 C-8.1
2. NEW RAMP SHALL HAVE "MEDIUM BROOM FINISH"

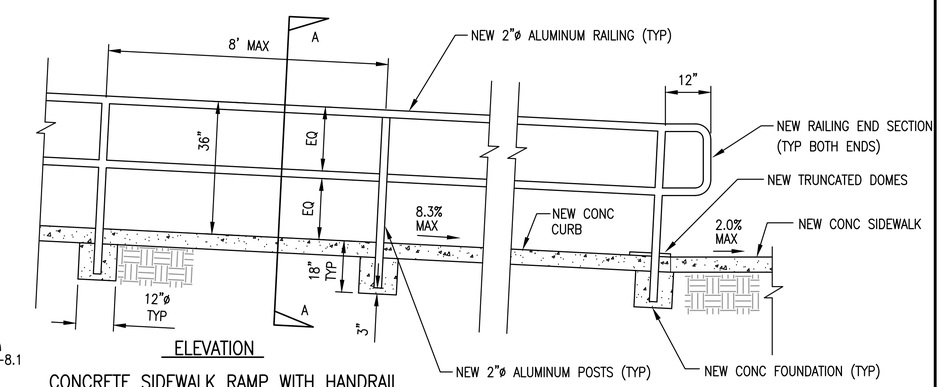

ELEVATION

CONCRETE SIDEWALK RAMP WITH HANDRAIL

DETAIL 4
NO SCALE C-3.1 C-8.2
C-8.4

NOTE:

1) USE CLASS I GALV STEEL PIPE GRADE A OR B FOR POSTS, TOP RAILS, AND BRACES.
2) USE TYPE I ZINC COATED STEEL 9 GAGE WIRE SIZE WITH 2" MESH SIZE FOR CHAIN LINK MESH.
3) ALL PIPE DIAMETERS SHOWN ARE OUTSIDE DIAMETER.
4) NEW FENCE POSTS SHALL BE A MINIMUM OF 18" CLEAR OF EXISTING OR NEW UTILITIES.

ELEVATION – FENCING

DETAIL 5
NO SCALE C-3.3 C-8.2

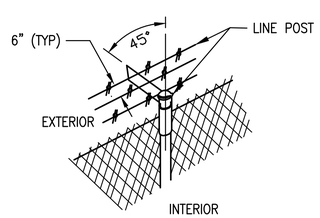

BARBED WIRE

JBY# 0622-12

REGISTERED PROFESSIONAL ENGINEER
JOHNATHAN BERNICHI
NO. 60229
EXP. 6-30-2012
CIVIL
STATE OF CALIFORNIA

JB YOUNG & ASSOCIATES, LTD
11440 Riverside Drive, Suite M
Lakeside, California 92040
(619) 448-9424
(619) 448-4690 FAX

DATE	SYM	REVISION	BY	A'PD

NATIONAL AERONAUTICS AND SPACE ADMINISTRATION

DRYDEN FLIGHT RESEARCH CENTER
EDWARDS, CA

DRAWING TITLE

CIVIL DETAILS

PROJECT TITLE

FACILITIES SUPPORT CENTER BUILDING
100% FINAL DESIGN SUBMITTAL

APPROVALS	DATE
Chief, Facilities Engineering & Asset Mgmt. Office DAN CROWLEY	4/14/11
Project Requestor/Customer DAN CROWLEY	4/14/11
Facilities Project Manager GEMMA FLORES	4/14/11
Chief, Office of Protective Services JOHN ZELLMER	4/14/11
Chief – Safety, Health and Environmental Office DAN MULLEN	4/14/11
DFRC Chief Information Officer KEN NORLIN	4/14/11

DATE STRTD	11/04/10	DATE PRNTD	03/14/11
DRAWN BY	JBY	EDM-1703	
SCALE	AS NOTED	TRADE SH. No. C-8.2	
FILE NAME		SHEET No. 17 of 193	

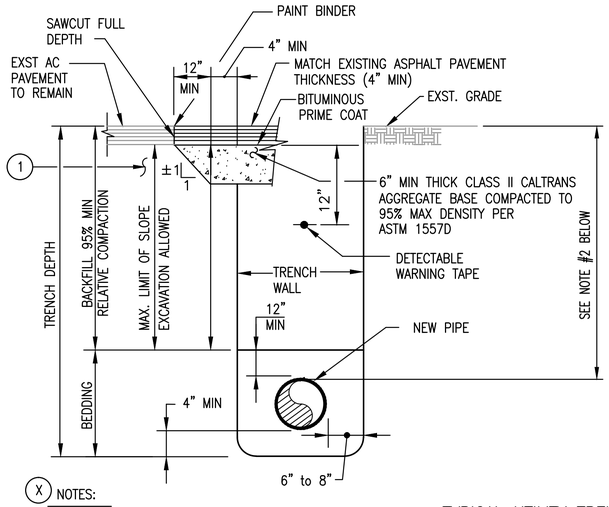

(X) NOTES:

1. EXISTING AGGREGATE BASE COURSE TO BE PROTECTED AND REMAIN UNDISTURBED TO PREVENT LOSS OF DENSITY AND SUPPORT UNDER EXISTING BITUMINOUS PAVEMENT.
2) MIN DEPTH = 24" FOR NATURAL GAS LATERALS
   MIN DEPTH = 24" FOR SEWER MAIN LATERAL
   MIN DEPTH = 12" FOR STORM DRAIN PIPE (NON-TRAFFIC AREAS)
   MIN DEPTH = 24" FOR STORM DRAIN PIPE (TRAFFIC AREAS)
   MIN DEPTH = 24" FOR POTABLE WATER LATERALS
   MIN DEPTH = 36" FOR POTABLE WATER MAINS
   MIN DEPTH = 48" FOR FIRE WATER MAINS OR LATERALS
   MIN DEPTH = 12" FOR ROOF DRAIN PIPE (NON-TRAFFIC, PLANTER AREAS)

TYPICAL UTILITY TRENCH

DETAIL 1 — NO SCALE — C-4.1 | C-8.3 — C-3.2, C-5.1, C-5.2

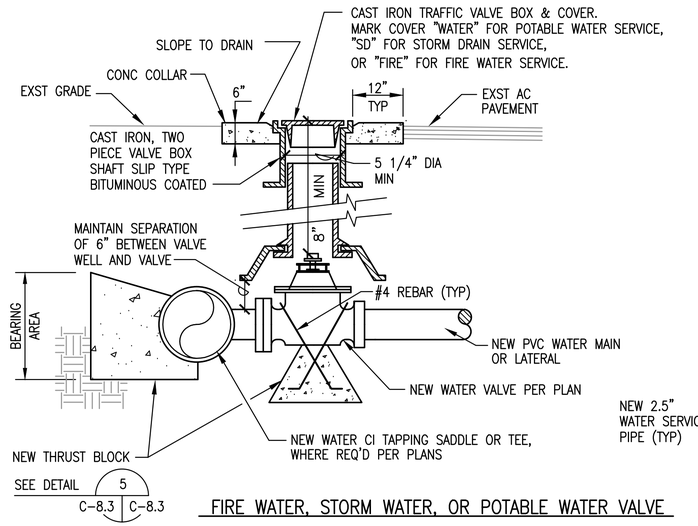

FIRE WATER, STORM WATER, OR POTABLE WATER VALVE

DETAIL 2 — NO SCALE — C-4.1 | C-8.3 — C-5.2

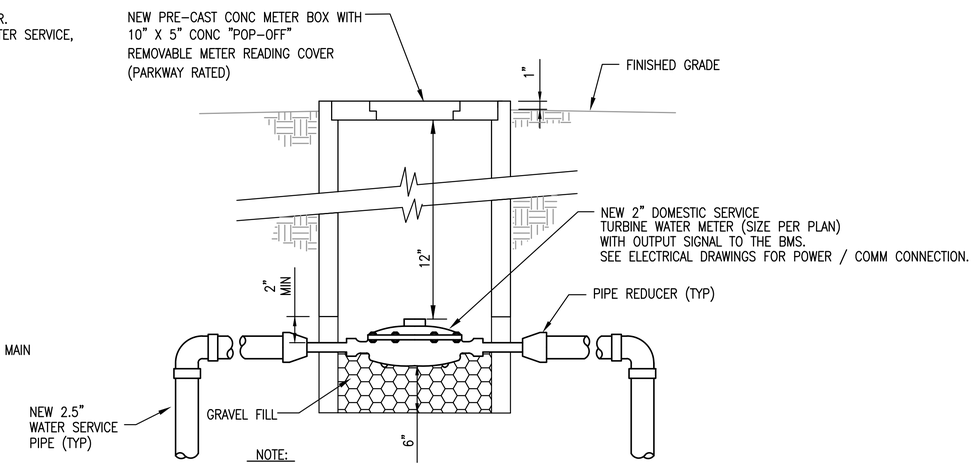

NOTE:
1) MINIMUM DISTANCE BETWEEN METER AND FIRST UPSTREAM & DOWNSTREAM FITTING PER MANUF. RECOMMENDATIONS.

DOMESTIC WATER METER

DETAIL 3 — NO SCALE — C-4.1 | C-8.3

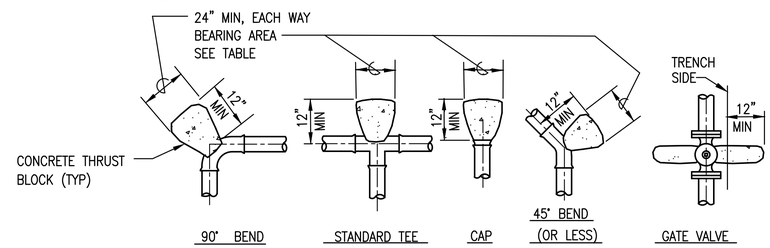

PIPE SIZE	FITTINGS 90°	45°	22 1/2°	11 1/4°	TEE, CAP & GV	BEARING AREA (SQ. FEET)
2 1/2"	1.4	1.0	0.5	0.3	1.2	
3"	2.0	1.1	0.6	0.3	1.4	
4"	3.5	2.0	1.0	0.5	2.5	
6"	7.9	4.5	2.3	1.1	5.7	
8"	14.1	8.0	4.0	2.0	10.1	
12"	31.7	18.1	9.0	4.5	22.6	
16"	56.3	32.2	16.1	8.0	40.2	

NOTES:
1. MAX. ALLOWABLE SOIL PRESSURE (MASP) = 1000 PSF
2. DESIGN OPERATING PRESSURE (DOP) = 120 PSI
3. DESIGN TEST PRESSURE (DTP) = 200 PSI
4. CONCRETE THRUST BLOCKS SHALL NOT INFRINGE ON VALVE OPERATORS, BOLTS, ETC.
5. ALL THRUST BLOCK BEARING AREAS SHALL BE CARRIED TO UNDISTURBED SOIL.
6. THRUST BLOCKS SHALL BE USED AT CONNECTIONS BETWEEN EXISTING & NEW PIPE MAINS WHERE JOINTS ARE NOT RESTRAINED.

HORIZONTAL BEND THRUST BLOCK TABLE AND DETAILS

DETAIL 5 — NO SCALE — C-4.1 | C-8.3 — C-8.1, C-8.3, C-8.4, C-8.8

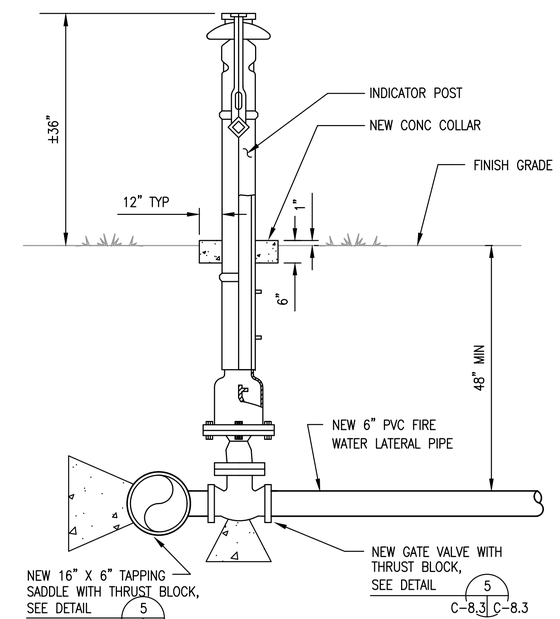

SECTION
POST INDICATOR VALVE

DETAIL 6 — NO SCALE — C-4.1 | C-8.3

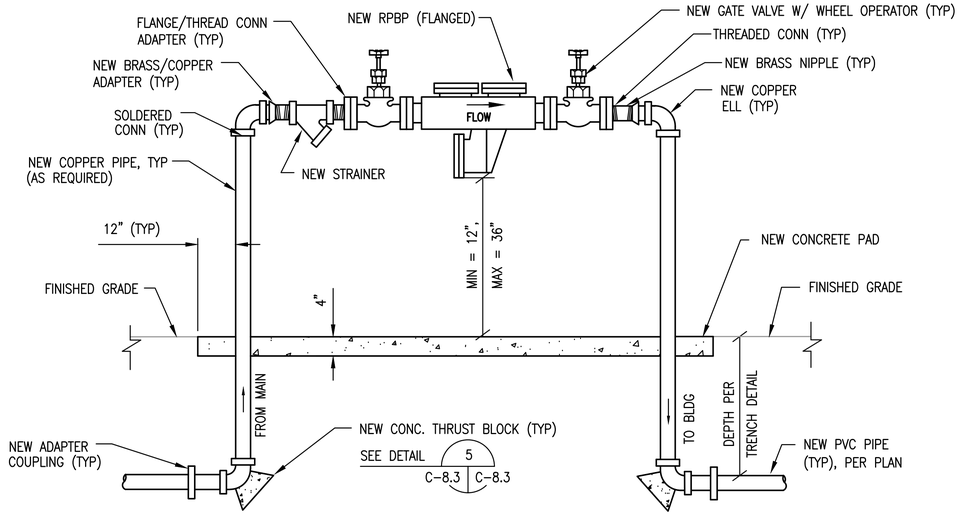

NOTES:
1) NEW RPBP SIZE PER PLAN.
2) NEW PIPE, FITTINGS, AND STRAINER SIZE SHALL MATCH RPBP SIZE.
3) RPBP SHALL HAVE A MIN 12" CLEARANCE ON ALL SIDES.
4) ALL ABOVE GROUND PIPING AND APPURTENANCES SHALL BE INSULATED. DO NOT BLOCK DRAIN OR MANUFACTURERS DATA.
5) WRAP PIPE THROUGH CONCRETE WITH 30# FELT.
6) ALL NEW BPA'S SHALL BE TESTED AND CERTIFIED AFTER INSTALLATION. SUBMIT TESTING AND CERTIFICATION FORM TO THE CONTRACTING OFFICER.

RPBP INSTALLATION

DETAIL 4 — NO SCALE — C-4.1 | C-8.3

JBY# 0622-12

REGISTERED PROFESSIONAL ENGINEER — JONATHAN BERNSTEIN CHI — NO. 60229 — EXP. 6-30-2012 — CIVIL — STATE OF CALIFORNIA

JB YOUNG & ASSOCIATES, LTD
11440 Riverside Drive, Suite M
Lakeside, California 92040
(619) 448-9424
(619) 448-4690 FAX

DATE	SYM	REVISION	BY	A'PD

NATIONAL AERONAUTICS AND SPACE ADMINISTRATION
DRYDEN FLIGHT RESEARCH CENTER
EDWARDS, CA

DRAWING TITLE
CIVIL DETAILS

PROJECT TITLE
FACILITIES SUPPORT CENTER BUILDING
100% FINAL DESIGN SUBMITTAL

APPROVALS	DATE
Chief, Facilities Engineering & Asset Mgmt. Office — DAN CROWLEY	4/14/11
Project Requestor/Customer — DAN CROWLEY	4/14/11
Facilities Project Manager — GEMMA FLORES	4/14/11
Chief, Office of Protective Services — JOHN ZELLMER	4/14/11
Chief – Safety, Health and Environmental Office — DAN MULLEN	4/14/11
DFRC Chief Information Officer — KEN NORLIN	4/14/11

DATE STRTD	11/04/10	DATE PRNTD	03/14/11
DRAWN BY	JBY	EDM-1703	
SCALE	AS NOTED	TRADE SH. No.	C-8.3
FILE NAME		SHEET No. 18 of 193	

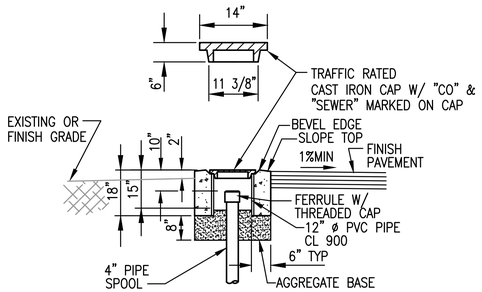

NOTE: PRECAST CONCRETE HANDHOLE WITH ABOVE CAP MAY BE USED IN LIEU OF CAST-IN-PLACE HANDHOLE. PROVIDE MINIMUM 6" ANNULAR CONCRETE COLLAR.

CLEANOUT ACCESS DETAIL

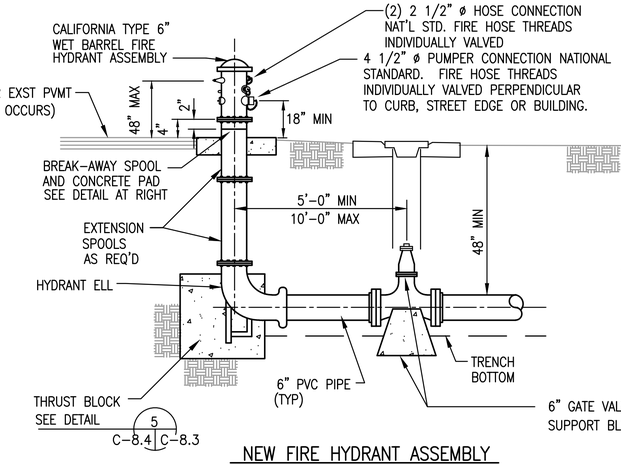

NEW FIRE HYDRANT ASSEMBLY

DETAIL 2
NO SCALE C-4.1 C-8.4

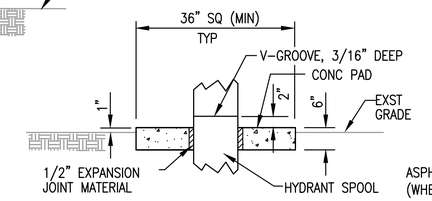

BREAK-AWAY SPOOL

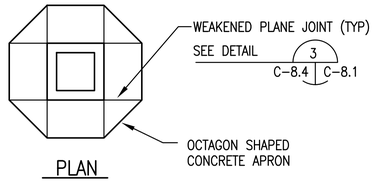

PLAN

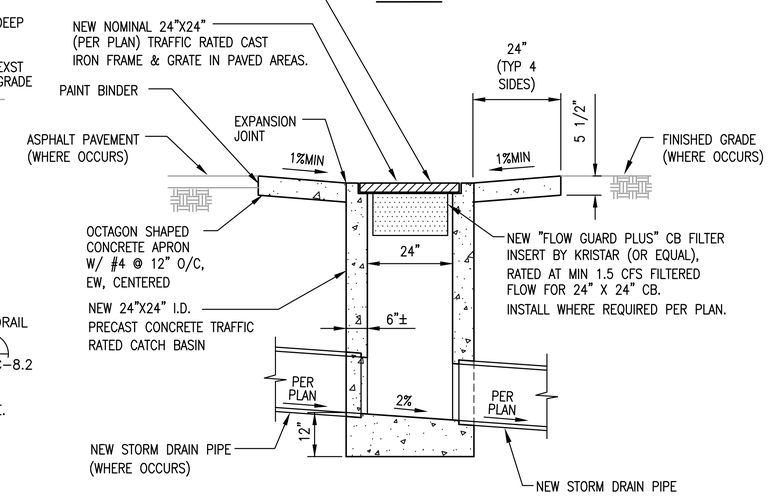

NOTE: CONCRETE CATCH BASIN, FRAME & GRATE SHALL BE H-20 TRAFFIC RATED.

SECTION

CATCH BASIN

DETAIL 4
NO SCALE C-3.2 C-8.4 C-5.1 C-5.2

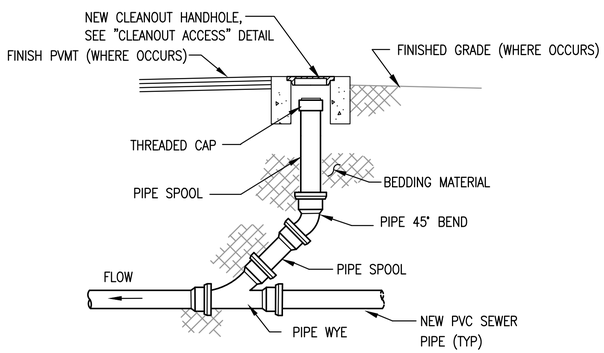

NOTE:
1) CLEANOUT PIPE SIZE SHALL MATCH LATERAL PIPE SIZE.
2) CONC COLLAR NOT REQ'D IF CLEANOUT IS LOCATED WITHIN CONC PAVEMENT.
3) SINGLE CLEANOUTS, ORIENTATE TO FACILITATE CLEANING DOWN STREAM.

SEWER CLEANOUT DETAIL

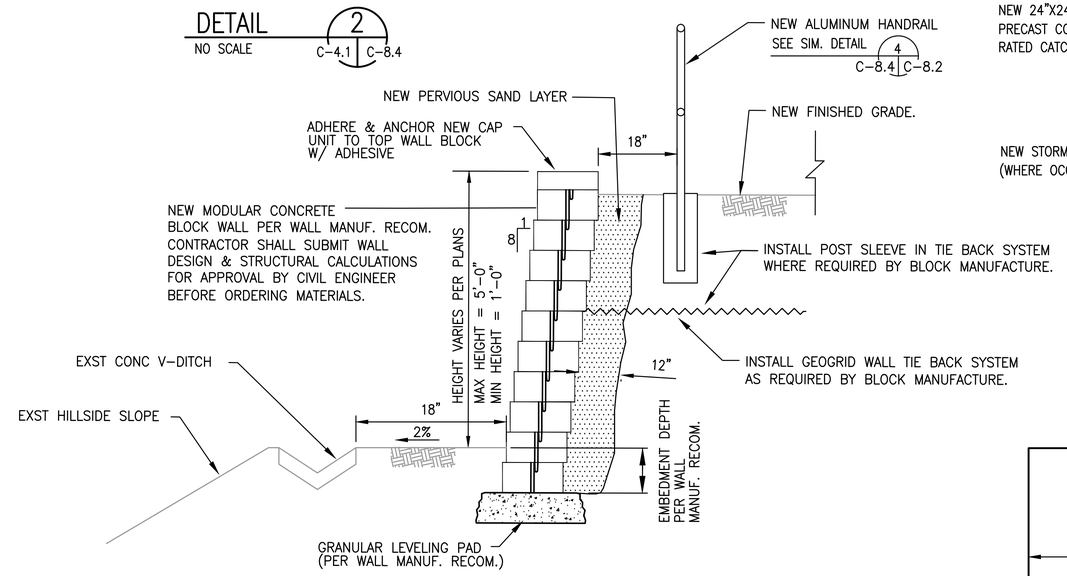

NOTE:
1) CONTRACTOR SHALL INSTALL GEO-GRID REINFORCEMENT WHEN REQUIRED BY BLOCK MANUF. RECOMMENDATIONS.
2) BLOCK COLOR = # 2828 "COLONIAL REVIVAL TAN".

TYPICAL MODULAR BLOCK GRAVITY WALL

DETAIL 3
NO SCALE C-5.1 C-8.4 C-5.2

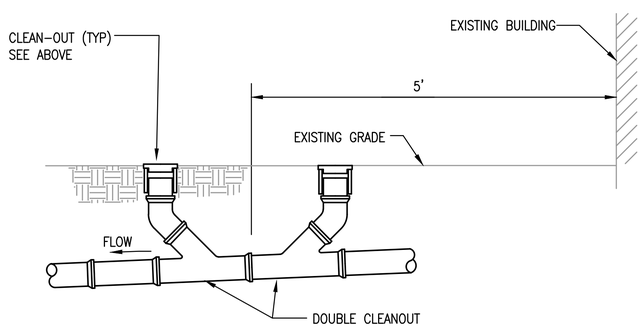

SEWER DOUBLE CLEANOUT LOCATION DETAIL

DETAIL 1
NO SCALE C-4.1 C-8.4

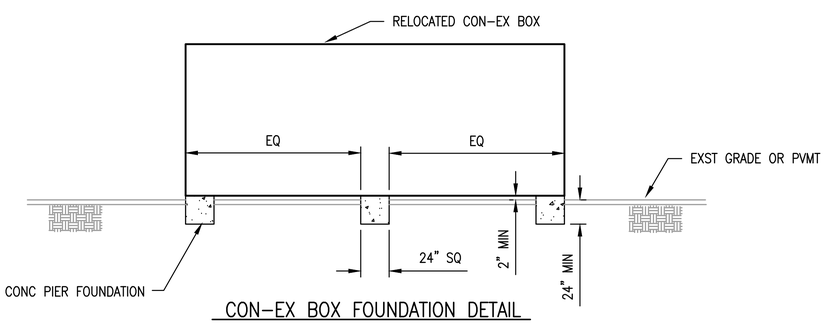

CON-EX BOX FOUNDATION DETAIL

DETAIL 5
NO SCALE C-3.3 C-8.4 C-3.1

JBY# 0622-12

REGISTERED PROFESSIONAL ENGINEER JONATHAN BERNSTEIN NO. 60229 EXP. 6-30-2012 CIVIL STATE OF CALIFORNIA

JB YOUNG & ASSOCIATES, LTD
11440 Riverside Drive, Suite M
Lakeside, California 92040
(619) 448-9424
(619) 448-4690 FAX

DATE	SYM	REVISION	BY	A'PD

NATIONAL AERONAUTICS AND SPACE ADMINISTRATION
DRYDEN FLIGHT RESEARCH CENTER
EDWARDS, CA

DRAWING TITLE
CIVIL DETAILS

PROJECT TITLE
FACILITIES SUPPORT CENTER BUILDING
100% FINAL DESIGN SUBMITTAL

APPROVALS		DATE
Chief, Facilities Engineering & Asset Mgmt. Office DAN CROWLEY		4/14/11
Project Requestor/Customer DAN CROWLEY		4/14/11
Facilities Project Manager GEMMA FLORES		4/14/11
Chief, Office of Protective Services JOHN ZELLMER		4/14/11
Chief – Safety, Health and Environmental Office DAN MULLEN		4/14/11
DFRC Chief Information Officer KEN NORLIN		4/14/11

DATE STRTD	11/04/10	DATE PRNTD	03/14/11
DRAWN BY	JBY	EDM-1703	
SCALE	AS NOTED	TRADE SH. No.	C-8.4
FILE NAME		SHEET No. 19 of 193	

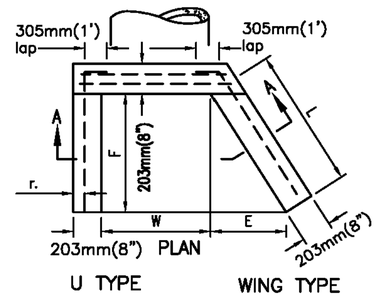

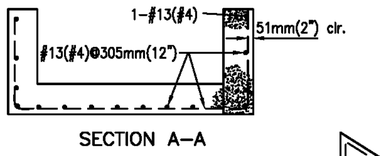

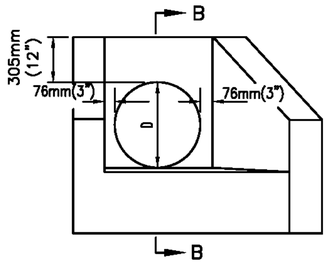

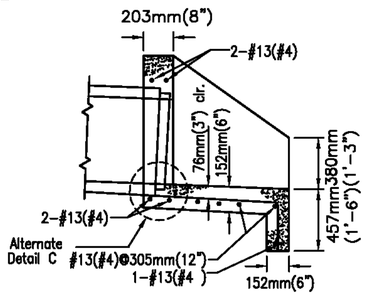

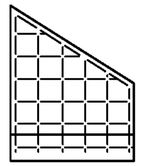

WING WALL
REINFORCING

NOTE:
1) E = 15"
2) L = 27"
3) F = 22 1/2"
4) W = 18"
5) EXPOSED CORNERS SHALL BE CHAMFERED 3/4".
6) INSTALL WING WALL TYPE HEADWALL.

CONCRETE HEADWALL

DETAIL 1
NO SCALE C-5.2 | C-8.5

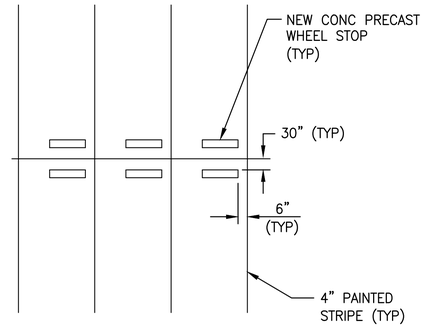

STRAIGHT WHEEL STOP LAYOUT

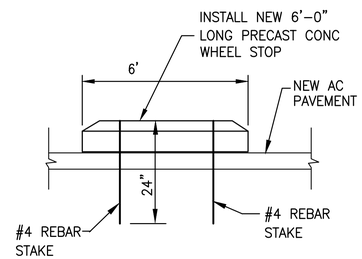

ELEVATION
NEW WHEEL STOP

DETAIL 2
NO SCALE C-7.1 | C-8.5

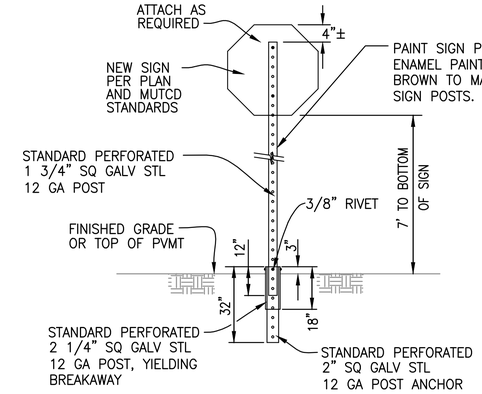

NOTE: BREAKAWAY POST SYSTEM TO BE GALVANIZED PER ASTM A525

INSTALL NEW SIGN

DETAIL 3
NO SCALE C-8.2 | C-8.5
C-8.5

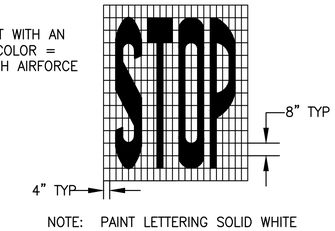

NOTE: PAINT LETTERING SOLID WHITE

PAINTED "STOP" LETTERING

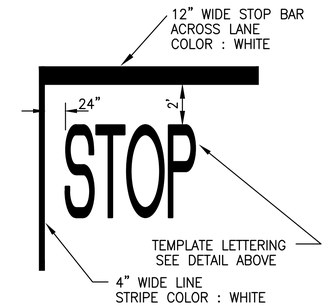

"STOP" BAR

DETAIL 4
NO SCALE C-7.1 | C-8.5

NOTES:
1) INSTALL METAL POST, PER DETAIL 3 (C-8.5 | C-8.5)
2) NEW SIGN SHALL BE 18" TALL X 12" WIDE X 12 GAGE ALUMINUM.
3) NEW SIGN SHALL HAVE 3/4" RADIUS CORNERS.
4) SIGN SHALL HAVE GREEN LETTERING WITH WHITE BACKGROUND.

DETAIL 5
NO SCALE C-7.1 | C-8.5

R1-1

NOTES:
1) INSTALL METAL POST, PER DETAIL 3 (C-8.5 | C-8.5)
2) STOP SIGN = MUTCD R1-1

"STOP" SIGN

DETAIL 6
NO SCALE C-7.1 | C-8.5

JBY# 0622-12

REGISTERED PROFESSIONAL ENGINEER
JONATHAN BERKOWITZ
NO. 60229
EXP. 6-30-2012
CIVIL
STATE OF CALIFORNIA

JB YOUNG & ASSOCIATES, LTD
11440 Riverside Drive, Suite M
Lakeside, California 92040
(619) 448-9424
(619) 448-4690 FAX

DATE	SYM	REVISION	BY	A'PD

NATIONAL AERONAUTICS AND SPACE ADMINISTRATION
DRYDEN FLIGHT RESEARCH CENTER
EDWARDS, CA

DRAWING TITLE
CIVIL DETAILS

PROJECT TITLE
FACILITIES SUPPORT CENTER BUILDING
100% FINAL DESIGN SUBMITTAL

APPROVALS		DATE
Chief, Facilities Engineering & Asset Mgmt. Office DAN CROWLEY		4/14/11
Project Requestor/Customer DAN CROWLEY		4/14/11
Facilities Project Manager GEMMA FLORES		4/14/11
Chief, Office of Protective Services JOHN ZELLMER		4/14/11
Chief – Safety, Health and Environmental Office DAN MULLEN		4/14/11
DFRC Chief Information Officer KEN NORLIN		4/14/11

DATE STRTD	11/04/10	DATE PRNTD	03/14/11
DRAWN BY	JBY	EDM-1703	
SCALE	AS NOTED	TRADE SH. No. C-8.5	
FILE NAME		SHEET No. 20 of 193	