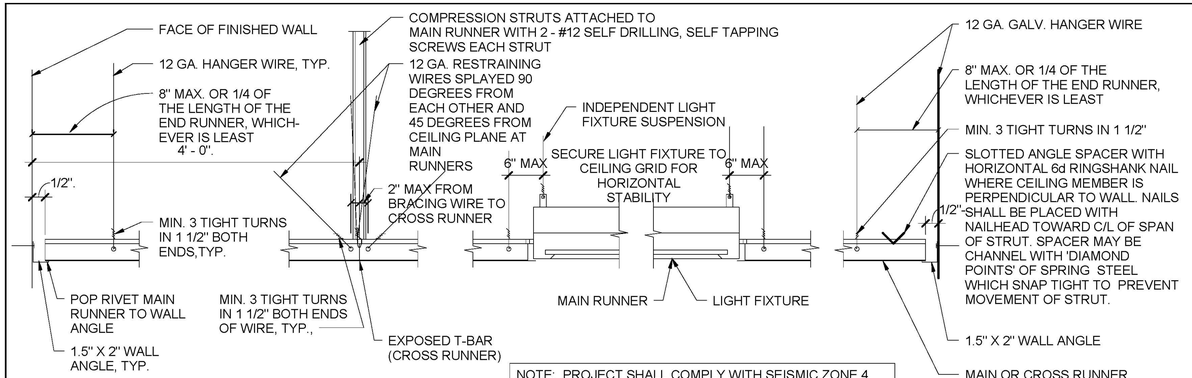

NOTE: PROJECT SHALL COMPLY WITH SEISMIC ZONE 4 REQUIREMENTS. PROVIDE DIAGONAL CROSS BRACING AT 12'-0" O.C. BOTH WAYS SEE DETAILS 2, 4, 10 THIS SHEET

TYPICAL SUSPENDED CEILING DETAIL

SCALE: 1" = 1'-0" | 7 | A3.1 A3.2 | A11.2

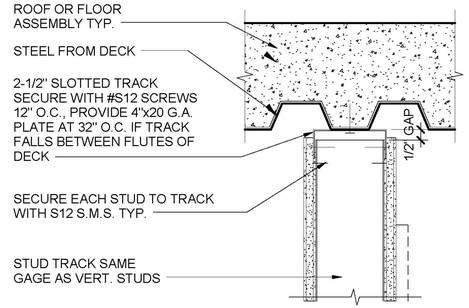

SLIP CONNECTION

SCALE: 3" = 1'-0" | 4 | A6.8 | A11.2

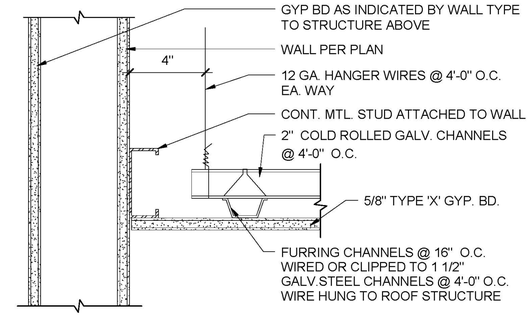

SUSPENDED GYP. BD. CEILING

SCALE: 3" = 1'-0" | 1 | A3.1 A3.2 | A11.2

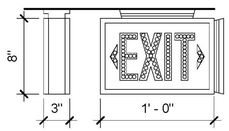

LUMINAIRE REQUIREMENTS:

1. ALUMINUM, STEEL, THERMOPLASTIC OR POLYCARBONATE HOUSING.
2. BRUSHED ALUMINUM, THERMOPLASTIC OR STEEL STENCIL WITH LETTERS 6 INCHES TALL AND 3/4" WIDE STROKES AND PUNCH-OUT FACE, FOR LED'S OR INTERNAL LED ILLUMINATION.
3. RED ILLUMINATION PROVIDED BY LIGHT EMITTING DIODES (LED). APPROXIMATELY 60 LED'S PER FACE.
4. CLEAR PROTECTIVE NON-BREAKABLE LENS TO PROTECT LED'S.
5. PROVIDE POWER FAILURE, BROWN-OUT PROTECTION AND SURGE PROTECTION.
6. PROVIDE NI-CAD BATTERY POWER AND SOLID STATE TYPE CHARGER.
7. PROVIDE UNIVERSAL ARROWS AND BLANK OFF PLATES.
8. PROVIDE SINGLE OR DOUBLE FACE. AS INDICATED
9. PROVIDE UNIVERSAL MOUNTING.
10. UNITS MOUNTED EXPOSED TO THE ELEMENTS OR IN CLASSIFIED AREAS SHALL HAVE A UL LABEL AS INDICATED
11. PROVIDE INTERNAL GREEN GROUNDING SCREW.
12. PROVIDE TEST BUTTON IN BOTTOM OF HOUSING.
13. PROVIDE INDICATOR LIGHTS IN FACE TO INDICATE WHEN UNIT IS ON NORMAL POWER OR BATTERY POWER.
14. HOUSING SHALL HAVE A WHITE FINISH, EXCEPT AS INDICATED OTHERWISE.

NOTES:

1. UNIT NOT AVAILABLE WITH WET LABEL
2. UNIT IS AVAILABLE WITH DAMP LABEL

EXIT SIGN

SCALE: 1 1/2" = 1'-0" | 8 | A3.2 | A11.2

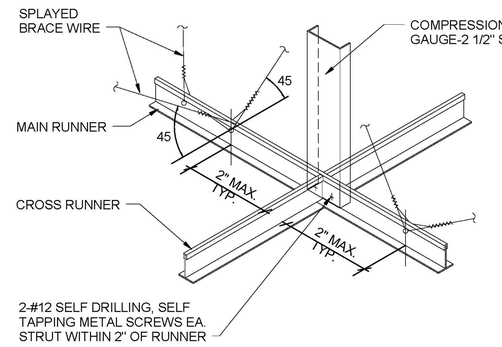

COMPRESSION STRUT TO T-BAR

SCALE: 6" = 1'-0" | 2 | A11.2 | A11.2

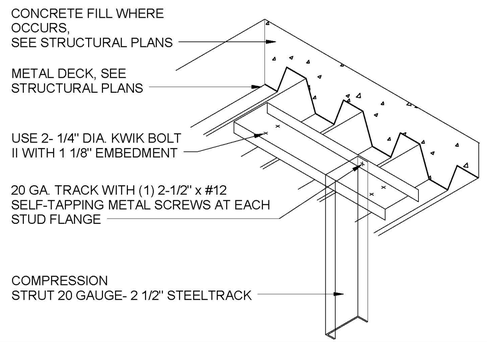

COMP. STRUT @ DECK

SCALE: 6" = 1'-0" | 5 | A11.2 | A11.2

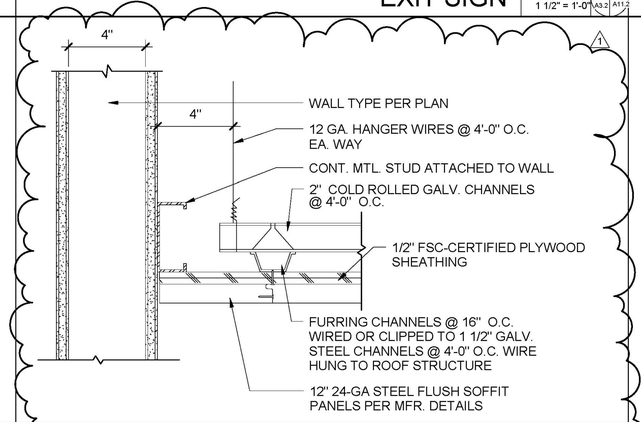

SUSPENDED METAL CEILING

SCALE: 3" = 1'-0" | 9 | A3.2 | A11.2

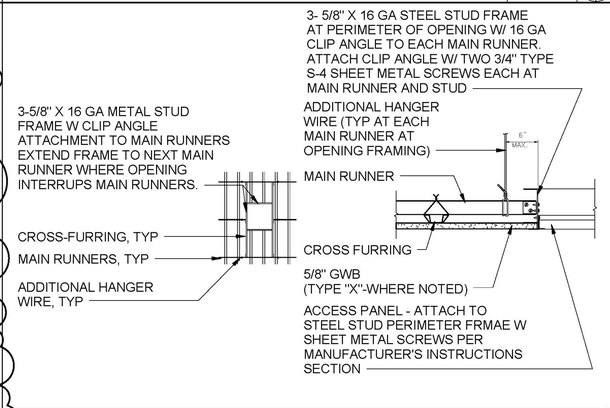

ACCESS PANEL CEILING DETAIL

SCALE: 1 1/2" = 1'-0" | 6 | A8.0 | A11.2

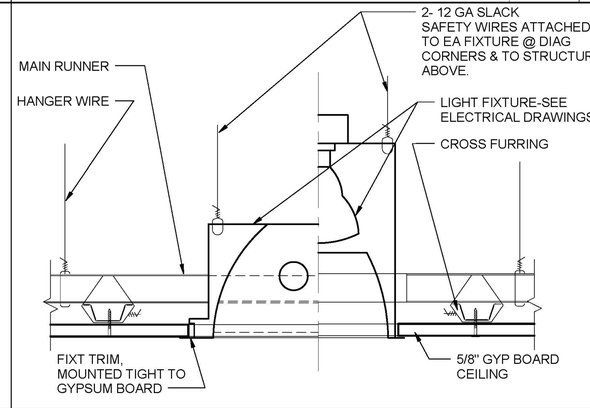

GYP BD CLG-TYP RECESS LIGHT FIXT

SCALE: 12" = 1'-0" | 3 | A8.0 | A11.2

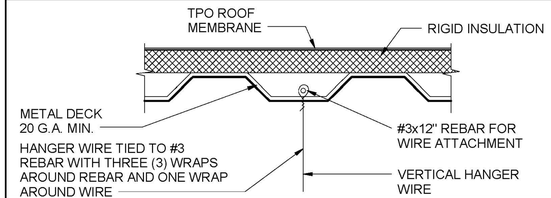

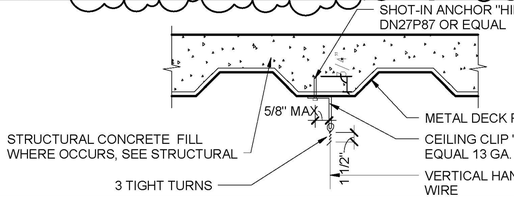

SPLAY WIRE CONNECTION

SCALE: 1" = 1'-0" | 10 | A11.2 | A11.2

LICENSED ARCHITECT J. BRUCE CAMINO C23740 Signature 10/31/11 RenewalDate STATE OF CALIFORNIA

DEVELOPMENT ONE, INC.
1611 East Fourth Street, Suite 250
Santa Ana, California 92701
J. Bruce Camino, Architect, AIA, NCARB
(714) 689-0298
(714) 648-0197 FAX

DATE	SYM	REVISION	BY	A'PD
09/02/11	1	BID RFI REVISION		

NATIONAL AERONAUTICS AND SPACE ADMINISTRATION

DRYDEN FLIGHT RESEARCH CENTER
EDWARDS, CA

DRAWING TITLE

CEILING DETAILS

PROJECT TITLE

FACILITIES SUPPORT CENTER
100% FINAL DESIGN SUBMITTAL

APPROVALS		DATE
Chief, Facilities Engineering and Asset Mgmt Office DAN CROWLEY		8-18-11
Project Requestor /Customer DAN CROWLEY		8-18-11
Facilities Project Manager GEMMA FLORES		8-18-11
Chief, Office of Protective Services JOHN ZELLMER		8-18-11
Chief - Safety, Health, and Environmental Office DAN MULLEN		8-18-11
DFRC Chief Information Officer KEN NORLIN		8-18-11

DATE STRTD	11/10/10	DATE PRNTD	09/02/11
DRAWN BY		EDM-1703	
SCALE	AS NOTED	TRADE SH. No.	
FILE NAME		A11.2	SHEET No. 82 of 195

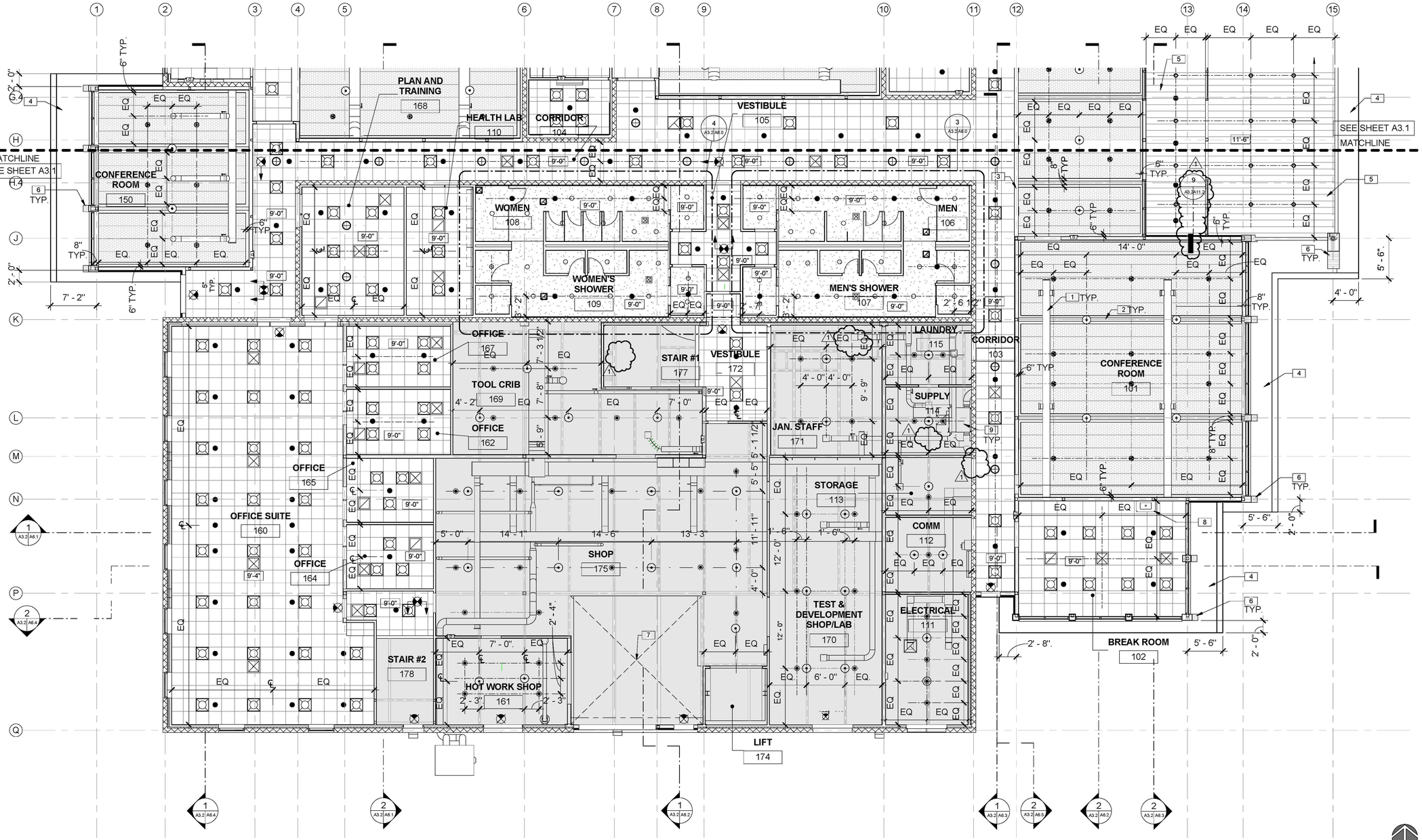

KEYNOTES:

1. EXPOSED HVAC DUCT AND DIFFUSERS, PAINTED, SEE MECHANICAL DRAWINGS
2. PAINTED STEEL TRUSS, SEE STRUCTURAL DRAWINGS
3. PAINTED GWB SOFFIT, SEE DETAIL 2 ON SHEET A12.0
4. METAL ROOF SOFFIT AT OVERHANG
5. SUSPENDED METAL PANEL CEILING SYSTEM, SEE FINISH SCHEDULE
6. TAPERED METAL COLUMN ENCLOSURE
7. OPEN TO ABOVE
8. STAINLESS STEEL KITCHEN EXHAUST HOOD, SEE MECHANICAL DRAWINGS
9. MECHANICAL EQUIPMENT, SEE MECHANICAL DRAWINGS

NOTES:

1. FOR SUSPENDED CEILING DETAILS, SEE SHEET A11.2
2. PAINT ALL INTERIOR EXPOSED METAL COMPONENTS & ACCESSORIES, STRUCTURAL COMPONENTS (METAL DECKS, TRUSSES & FRAMINGS)
3. CEILING DIMENSIONS ARE TO FACE OF FINISH (F.O.F.), CENTERLINE OF LIGHT FIXTURE U.N.O.

LEGEND:

- CURVED 2' X 6' SUSPENDED CEILING GRID WITH METAL PANELS, SEE FINISH SCHEDULE ON SHEET A7.3
- 14" DIA TUBULAR DAYLIGHTING DEVICE WITH VARIABLE BAFFLE CONTROL & DIFFUSING LENS, SEE DETAIL 1/A12.1
- 2' X 2' SUSPENDED CEILING GRID WITH ACOUSTICAL TILES, SEE DETAIL 7/A11.2
- OPEN TO STRUCTURE ABOVE
- GYPSUM BOARD SOFFIT
- BID OPTION 3 ALL LOCATIONS
- CEILING GRILLE - EXHAUST
- CEILING GRILLE -RETURN
- CEILING GRILLE -SUPPLY
- AIR TERMINAL -SUPPLY
- LED PENDANT MOUNT LOW BAY FIXTURE
- LED RECESSED 2' X 2' FIXTURE IN ACCESSIBLE CEILING, SEE DETAIL 7/A11.2
- X'-X" CEILING HEIGHT, ABOVE FINISH FLOOR (A.F.F.)
- RECESSED MOUNTED LED CEILING LIGHT FIXTURE, SEE DETAIL 3/A11.2
- EXIT SIGN, SEE DETAIL 8/ A11.2
- CONCEALED FIRE SPRINKLER, SEE FIRE SPRINKLER DRAWINGS FOR ADDITIONAL INFORMATION
- UPRIGHT FIRE SPRINKLER, SEE FIRE SPRINKLER DRAWINGS FOR ADDITIONAL INFORMATION

SOUTH SEGMENT REFLECTED CEILING PLAN

SCALE: 1/8" = 1'-0" (1 / A3.0 / A3.2)

LICENSED ARCHITECT JOHN BRUCE CAMINO C23740 Signature 10/31/11 RenewalDate STATE OF CALIFORNIA

DEVELOPMENT ONE, INC.
1611 East Fourth Street, Suite 250
Santa Ana, California 92701
J. Bruce Camino, Architect, AIA, NCARB
(714) 689-0298
(714) 648-0197 FAX

DATE	SYM	REVISION	BY	A'PD
09/02/11	1	BID RFI REVISION		

NATIONAL AERONAUTICS AND SPACE ADMINISTRATION
DRYDEN FLIGHT RESEARCH CENTER
EDWARDS, CA

DRAWING TITLE
SOUTH SEGMENT REFLECTED CEILING PLAN

PROJECT TITLE
FACILITIES SUPPORT CENTER
100% FINAL DESIGN SUBMITTAL

APPROVALS	DATE
Chief, Facilities Engineering & Asset Mgmt. Office DAN CROWLEY	8-18-11
Project Requestor /Customer DAN CROWLEY	8-18-11
Facilities Project Manager GEMMA FLORES	8-18-11
Chief, Office of Protective Services JOHN ZELLMER	8-18-11
Chief - Safety, Health, and Environmental Office DAN MULLEN	8-18-11
DFRC Chief Information Officer KEN NORLIN	8-18-11

DATE STRTD	11/04/10	DATE PRNTD	09/02/11
DRAWN BY		EDM-1703	
SCALE	AS NOTED	TRADE SH. No. A3.2	
FILE NAME		SHEET No. 47 of 195	