Branch Panel: P5

Location: Space 153 **Volts:** 120/208 Wye **A.I.C. Rating:** 42,000
Supply From: DSP **Phases:** 3 **Mains Type:**
Mounting: Surface **Wires:** 4 **Bus Rating:** 225 A
Enclosure: Type 1 **MCB Rating:** 150 A

Notes:

CKT	Circuit Description	Trip	Poles	A		B		C		Poles	Trip	Circuit Description	CKT
1	Pwr. Rm's 142,143,144,145,146 (6)	20 A	1	1080	720					1	20 A	Pwr. Cubicle Rm. 140 (4)	2
3	Pwr. Rm's 141,142,143,144,145,146 (6)	20 A	1			1260	540			1	20 A	Pwr. Cubicle Rm. 140 (3)	4
5	Pwr. Rm's 141,142,143,144,145,146 (6)	20 A	1					1080	900	1	20 A	Pwr. Cubicle Rm. 140 (5)	6
7	Pwr. Copy Rm 141 (1)	20 A	1	600	900					1	20 A	Pwr. Cubicle Rm. 140 (5)	8
9	Pwr Rm's 141,150 (3)	20 A	1			720	900			1	20 A	Pwr. Cubicle Rm. 140 (5)	10
11	Pwr. Rm's 141,150 (4)	20 A	1					720	1080	1	20 A	Pwr. Cubicle Rm. 140 (6)	12
13	Pwr. EF-5, Recep	20 A	1	180	1080					1	20 A	Pwr. Cubicle Rm. 140 (6)	14
15	Pwr. FC-7,FC-8,FC-9	20 A	2			394	1080			1	20 A	Pwr. Cubicle Rm. 140 (6)	16
17	--	--	--					394	1080	1	20 A	Pwr. Cubicle Rm. 140 (6)	18
19	Pwr. IDEC-8	20 A	3	319	900					1	20 A	Pwr. Cubicle Rm. 140 (5)	20
21	--	--	--			319	180			1	20 A	Pwr. Recep. Rm. 140 (1)	22
23	--	--	--					319	180	1	20 A	Pwr. Irrigation Control	24
25	LCP1	20 A	1	180	180					1	20 A	Pwr. Recep. Ceiling Rm. 146	26
27	Pwr. ERU-1	20 A	2			139							28
29	--	--	--					139					30
31													32
33													34
35													36
37													38
39													40
41													42
			Total Load:	6139 VA		5532 VA		5892 VA					
			Total Amps:	51 A		46 A		49 A					

Legend:

Load Classification	Connected Load	Demand Factor	Estimated Demand	Panel Totals	
Other	180 VA	100.00%	180 VA		
Power	17023 VA	100.00%	17023 VA	**Total Conn. Load:**	17383 VA
Receptacle	180 VA	100.00%	180 VA	**Total Est. Demand:**	17383 VA
				Total Conn. Current:	48 A
				Total Est. Demand	48 A

Notes:

Branch Panel: P6

Location: Space 110 **Volts:** 120/208 Wye **A.I.C. Rating:** 42,000
Supply From: DSP **Phases:** 3 **Mains Type:**
Mounting: Surface **Wires:** 4 **Bus Rating:** 225 A
Enclosure: Type 1 **MCB Rating:** 150 A

Notes:

CKT	Circuit Description	Trip	Poles	A		B		C		Poles	Trip	Circuit Description	CKT
1	Pwr. Rm's 161,164,165,162,169 (6)	20 A	1	720	1080					1	20 A	Pwr. Rm's 108,109,110,167,168 (6)	2
3	Pwr. Rm's 164,165,162,167,169 (6)	20 A	1			900	1080			1	20 A	Pwr. Rm's 105,108,109,110,168 (6)	4
5	Pwr. Rm's 164,165,162,167,169 (6)	20 A	1					900	900	1	20 A	Pwr. Rm's 110,167,168 (6)	6
7	Pwr. IDEC-10	20 A	3	458	1650					1	20 A	Pwr. Garbage Disposal Rm 110 (1)	8
9	--	--	--			458	540			1	20 A	Pwr. Rm. 160 (3)	10
11	--	--	--					458	1080	1	20 A	Pwr. Cubicle Rm. 160 (6)	12
13	Pwr. Rm. 110 (3)	20 A	1	540	1260					1	20 A	Pwr. Cubicle Rm. 160 (7)	14
15							1260			1	20 A	Pwr. Cubicle Rm. 160 (7)	16
17									1080	1	20 A	Pwr. Cubicle Rm. 160 (6)	18
19					540					1	20 A	Pwr. Cubicle Rm. 160 (3)	20
21							540			1	20 A	Pwr. Cubicle Rm. 160 (3)	22
23													24
25													26
27													28
29													30
31													32
33													34
35													36
37													38
39													40
41													42
			Total Load:	6248 VA		4778 VA		4418 VA					
			Total Amps:	52 A		40 A		37 A					

Legend:

Load Classification	Connected Load	Demand Factor	Estimated Demand	Panel Totals	
Power	15264 VA	100.00%	15264 VA		
Receptacle	180 VA	100.00%	180 VA	**Total Conn. Load:**	15444 VA
				Total Est. Demand:	15444 VA
				Total Conn. Current:	43 A
				Total Est. Demand	43 A

Notes:

Branch Panel: P7

Location: Space 119 **Volts:** 120/208 Wye **A.I.C. Rating:** 42,000
Supply From: DSP **Phases:** 3 **Mains Type:**
Mounting: Surface **Wires:** 4 **Bus Rating:** 225 A
Enclosure: Type 1 **MCB Rating:** 225 A

Notes:

CKT	Circuit Description	Trip	Poles	A		B		C		Poles	Trip	Circuit Description	CKT
1	Pwr. Receptacles Rm. 170 (3)	20 A	1	540	720					1	20 A	Pwr. Receptacles Rm. 170 (4)	2
3	Pwr. Receptacles Rm. 170 (2)	20 A	1			360	1560			2	30 A	Pwr. Receptacle Rm. 170	4
5	Pwr. Receptacle Rm. 170	30 A	3					1800	1560	--	--	--	6
7	--	--	--	1800	1800					3	30 A	Pwr. Receptacle Rm. 170	8
9	--	--	--			1800	1800			--	--	--	10
11	Pwr. Receptacles Rm. 170 (3)	20 A	1					540	1800	--	--	--	12
13	Pwr. Receptacles Rm. 170 (3)	20 A	1	540									14
15	Pwr. Receptacle Rm. 170	30 A	2			1560							16
17	--	--	--					1560					18
19	Pwr. Receptacle Rm. 170	30 A	3	1800									20
21	--	--	--			1800							22
23	--	--	--					1800					24
25	Pwr. Receptacle Rm. 170	20 A	1	360									26
27	Pwr. Receptacle Rm. 170	30 A	2			1560							28
29	--	--	--					1560					30
31	Pwr. Receptacle Rm. 170	30 A	3	1800									32
33	--	--	--			1800							34
35	--	--	--					1800					36
37													38
39													40
41													42
			Total Load:	9360 VA		12240 VA		12420 VA					
			Total Amps:	78 A		102 A		104 A					

Legend:

Load Classification	Connected Load	Demand Factor	Estimated Demand	Panel Totals	
Other	30960 VA	100.00%	30960 VA		
Power	3060 VA	100.00%	3060 VA	**Total Conn. Load:**	34020 VA
				Total Est. Demand:	34020 VA
				Total Conn. Current:	94 A
				Total Est. Demand	94 A

Notes:
1. PROVIDE ISOLATED GROUND BUS.

Branch Panel: P8

Location: Space 109 **Volts:** 120/208 Wye **A.I.C. Rating:** 42,000
Supply From: DSP **Phases:** 3 **Mains Type:**
Mounting: Surface **Wires:** 4 **Bus Rating:** 225 A
Enclosure: Type 1 **MCB Rating:** 150 A

Notes:

CKT	Circuit Description	Trip	Poles	A		B		C		Poles	Trip	Circuit Description	CKT
1	Pwr. Receptacles Rm. 175 (5)	20 A	1	900	1000					2	20 A	Pwr. Lift Disconnect Rm. 174	2
3	Pwr. Receptacles Rm. 175 (3)	20 A	1			540	1000			--	--	--	4
5	Pwr. Receptacles Rm. 175 (4)	20 A	1					720	3120	2	50 A	Welder Receptacle Rm. 161	6
7	Grinder Disconnect Rm. 161	20 A	3	350	3120					--	--	--	8
9	--	--	--			350	3120			2	50 A	Welder Receptacle Rm. 161	10
11	--	--	--					350	3120	--	--	--	12
13	Pwr. Receptacle Rm. 161 (5)	20 A	1	900	286					2	20 A	Pwr. FC-10,FC-11,FC-15	14
15	Pwr. Receptacle Rm. 161 (5)	20 A	1			1080	286			--	--	--	16
17	Pwr. Receptacle Rm. 169 (5)	20 A	1					900	286	2	20 A	Pwr. FC-12,FC-13,FC-14	18
19	Pwr. Receptacle Rm. 171 (4)	20 A	1	720	286					--	--	--	20
21	Pwr. ERU-2	20 A	2			327	1080			1	20 A	Pwr. Fire Dampers Rm. 175 (7)	22
23	--	--	--					327					24
25	Pwr. Charging Cart Station	20 A	1	1600	1600					1	20 A	Pwr. Charging Cart Station	26
27	Pwr. Charging Cart Station	20 A	1			1600	1600			1	20 A	Pwr. Charging Cart Station	28
29	Pwr. Charging Cart Station	20 A	1					1600	800	2	20 A	Gate Motor	30
31	Pwr. Charging Cart Station	20 A	1	1600	800					--	--	--	32
33	Pwr. Charging Cart Station	20 A	1			1600	1000			1	20 A	Con-Ex Trailer	34
35	Pwr. Charging Cart Station	20 A	1					1600					36
37	Pwr. Charging Cart Station	20 A	1	1600									38
39	Pwr. Charging Cart Station	20 A	1			1600							40
41													42
			Total Load:	14762 VA		15183 VA		12823 VA					
			Total Amps:	123 A		127 A		107 A					

Legend:

Load Classification	Connected Load	Demand Factor	Estimated Demand	Panel Totals	
HVAC	572 VA	100.00%	572 VA		
Other	33210 VA	100.00%	33210 VA	**Total Conn. Load:**	42768 VA
Power	8986 VA	100.00%	8986 VA	**Total Est. Demand:**	42768 VA
				Total Conn. Current:	119 A
				Total Est. Demand	119 A

Notes:

REGISTERED PROFESSIONAL ENGINEER
KURT KAISER
No. E015151
Exp. 6-30-12
ELECTRICAL
STATE OF CALIFORNIA

DONN C. GILMORE & ASSOCIATES, INC.
Consulting Mechanical and Electrical Engineers
DCGA
4051 E. La Palma Ave., Ste. A
Anaheim, CA 92807
Ph.: 714.630.4291
Fax: 714.630.4805

DATE	SYM	REVISION	BY	A'PD

NATIONAL AERONAUTICS AND SPACE ADMINISTRATION
DRYDEN FLIGHT RESEARCH CENTER
EDWARDS, CA

DRAWING TITLE
ELECTRICAL SCHEDULES

PROJECT TITLE
8-18-11
FACILITIES SUPPORT CENTER
100% FINAL DESIGN SUBMITTAL

APPROVALS		DATE
Chief, Facilities Engineering Assist. Office DAN CROWLEY		8-18-11
Project Requestor /Customer DAN CROWLEY		8-18-11
Facilities Project Manager GEMMA FLORES		8-18-11
Chief, Office of Protective Services JOHN ZELLMER		8-18-11
Chief - Safety, Health, and Environmental Office DAN MULLEN		8-18-11
DFRC Chief Information Officer KEN NORLIN		8-18-11

DATE STRTD	11/04/10	DATE PRINTD	05/23/11
DRAWN BY		EDM-1703	
SCALE	AS NOTED	TRADE SH. No.	E0.5
FILE NAME		SHEET No. 161 of 195	

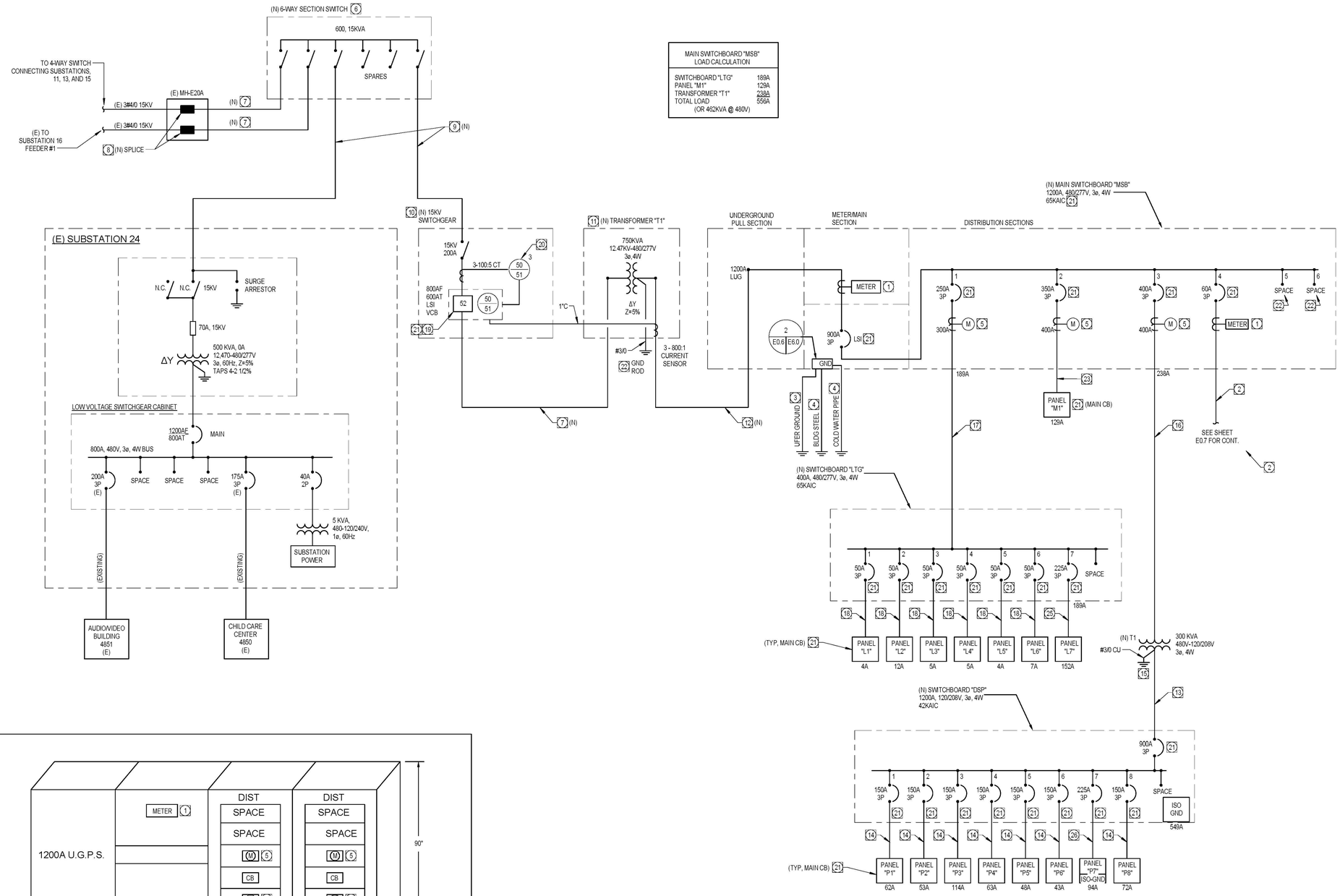

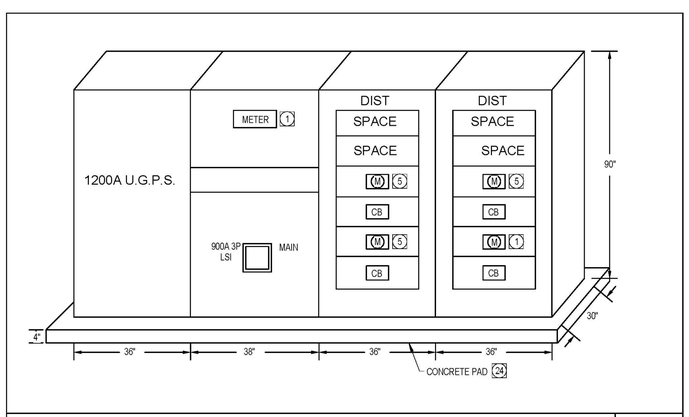

MAIN SWITCHBOARD "MSB" ELEVATION | 1 | N.T.S.

SINGLE LINE DIAGRAM NOTES:

1. PROVIDE SQUARE D POWER LOGIC SERIES 4000 CIRCUIT MONITOR MODEL CM4250, WITH MODEL CMDVF VACUUM FLUORESCENT DISPLAY AND MODEL ECC21 ETHERNET COMMUNICATIONS CARD. NO EXCEPTIONS OR EQUIVALENT HARDWARE WILL BE ALLOWED.
2. PROVIDE 1"C-3 #4, 1#8 GND.
3. PROVIDE 30 FEET OF #3/0 COPPER WIRE, ENCASED IN BUILDING CONCRETE FOUNDATION.
4. PROVIDE #3/0 COPPER WIRE TO BUILDING STEEL AND COLD WATER PIPE AT BUILDING SERVICE ENTRY.
5. PROVIDE NETWORKED 3-PHASE DIGITAL MULTI-FUNCTION POWER MONITOR WITH MODBUS RTU. POWER MEASUREMENTS SHALL INCLUDE VOLTS, AMPS, KW, KVA, KWH, FREQUENCY, AND POWER FACTOR. INTEGRATED MEMORY SHALL STORE MAXIMUM KW DEMAND AND TOTALIZED KWH READINGS. PROVIDE VERIS MODEL H8036 OR APPROVED EQUAL. AS H8036-300-2 FOR 300A H8036-0400-3 FOR 400A CTS.
6. PROVIDE NEW 600A, 15KV, 6-WAY, SF6 SECTIONALIZING SWITCH, PAD MOUNTED ADJACENT TO EXISTING SUBSTATION 24.
7. PROVIDE 4"C - 3# 4/0, 15KV, 133% INSULATION, WITH #1/0 BARE COPPER GROUND WIRE.
8. PROVIDE WATER-PROOF INLINE SPLICE ON EXISTING 15KV CONDUCTORS IN MANHOLE.
9. PROVIDE 5"C - 3# 4/0, 15KV, 133% INSULATION, WITH #1/0 BARE COPPER GROUND WIRE.
10. PROVIDE NEW PAD MOUNTED INTERRUPT SWITCH RATED 15KV, 200A, AND FIXED MOUNTED VACUUME BREAKER RATED 15KV 600A IN SINGLE NON-WALKING, WEATHER-PROOF ENCLOSURE. PROVIDE INTEGRAL 120VAC CONTROL POWER SOURCE TRANSFORMER AND CAPACITOR STORED ENERGY TRIP DEVICE FOR VACUUM BREAKER. PROVIDE EATON MODEL METAL ENCLOSED SWITCHGEAR OR APPROVED
11. PROVIDE NEW PAD-MOUNTED BUILDING SERVICE TRANSMFORMER. SEE SITE PLAN (SHEET E1.0) FOR LOCATION.
12. PROVIDE (3) 3"C-4 #500 MCM, 1 #2/0 GND. (IN EACH).
13. PROVIDE (3) 2-1/2"C - 4# 350 MCM, 1# 2/0 GND, 1#6 ISO GND (EACH).
14. PROVIDE 2"C - 4# 2/0, 1#6 GND.
15. PROVIDE BOLTED CONNECTION TO MAIN SWITCHBOARD "MSB" GROUND BUS.
16. PROVIDE (2) 2"C - 3# 3/0, 1#3 GND (EACH).
17. PROVIDE 2-1/2"C - 4# 250 MCM, 1#4 GND.
18. PROVIDE 1-1/4"C - 4#4, 1#8 GND.
19. PROVIDE FIXED MOUNTED VACUUM CIRCUIT BREAKER WITH INTEGRAL 50/50 OVERCURRENT PROTECTIVE DEVICE AND ARC DEDUCTION MAINTENANCE MODE SWITCH. PROVIDE EATON MODEL 150 VCP-TR40 15KV VACUUM BREAKER WITH MODEL DT520MCV 50/50 PROTECTIVE RELAY OR APPROVED EQUAL.
20. PROVIDE EATON MODEL DT-3000 PROTECTIVE RELAY OR APPROVED EQUAL.
21. PROVIDE SHORT CIRCUIT STUDY, COORDINATION STUDY, ARC FLASH ANALYSIS AND ARC FLASH LABLES PER NFPA 70E, FOR 15KV, 480V AND 208V CIRCUIT BREAKERS INDICATED. SEE LEWEL LYN ARC FLASH STUDY, DATED 9/8/2009, DRAWING 8, FOR AVAILBLE SHORT CIRCUIT CURRENT AT SUBSTATION 24 12.47KV BUS.CIRCUIT BREAKERS.
22. PROVIDE SPACE FOR TWO (2) 225A FRAME, 3 POLE CIRCUIT BREAKERS.
23. PROVIDE (2) 2"C-3 #2/0, 1 #3 GND.
24. PROVIDE 4" CONCRETE HOUSEKEEPING PAD WITH 4" OVERLAP, ALL AROUND.
25. PROVIDE 2 1/2"C-4 #4/0, 1 #4 GND.
26. PROVIDE 2 1/2"C-4 #4/0, 1 #4 GND., 1 #4 ISO-GND.

REGISTERED PROFESSIONAL ENGINEER — FORT KAISER — No. E015151 — Exp. 6-30-12 — ELECTRICAL — STATE OF CALIFORNIA

DONN C. GILMORE & ASSOCIATES, INC.
Consulting Mechanical and Electrical Engineers
DCGA
4051 E. La Palma Ave., Ste. A
Anaheim, CA. 92807
Ph.: 714.630.4291
Fax: 714.630.4805

DATE	SYM	REVISION	BY	A'PD

NATIONAL AERONAUTICS AND SPACE ADMINISTRATION
DRYDEN FLIGHT RESEARCH CENTER
EDWARDS, CA

DRAWING TITLE
ELECTRICAL SINGLE LINE DIAGRAM

PROJECT TITLE
8-18-11
FACILITIES SUPPORT CENTER
100% FINAL DESIGN SUBMITTAL

APPROVALS	DATE
Chief, Facilities Engineering Assist. Office DAN CROWLEY	8-18-11
Project Requestor /Custom DAN CROWLEY	8-18-11
Facilities Project Manager GEMMA FLORES	8-18-11
Chief, Office of Protective Services JOHN ZELLMER	8-18-11
Chief - Safety, Health, and Environmental Office DAN MULLEN	8-18-11
DFRC Chief Information Officer KEN NORLIN	8-18-11

DATE STRTD	11/04/10	DATE PRNTD	05/23/11
DRAWN BY		TRADE SH. No.	EDM-1703
SCALE	AS NOTED		
FILE NAME		E0.6	SHEET No. 162 of 195

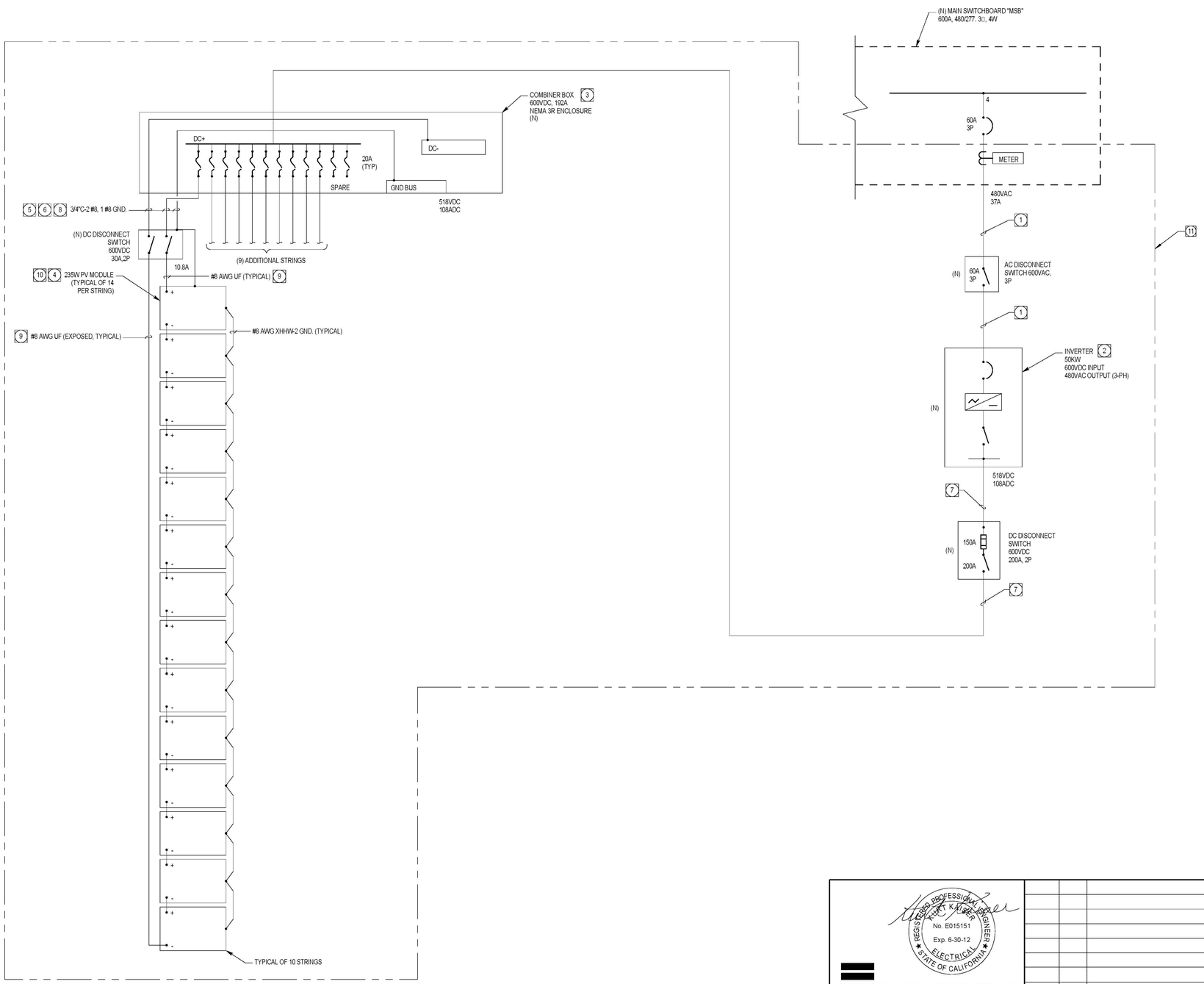

SINGLE LINE DIAGRAM NOTES:

1. PROVIDE 1"C-3 #4, 1 #8 GND.
2. PROVIDE PV SYSTEM INVERTER WITH INTEGRATED DC AND AC DISCONNECT SWITCHES, UBC SEISMIC ZONE 4 RATING, 600VDC INPUT MAXIMUM, AND 480VAC, 60HZ NOMINAL OUTPUT. PROVIDE SATCON MODEL PVS-50 OR APPROVED EQUAL.
3. PROVIDE COMBINER BOX WITH (12) 20A FUSED CIRCUITS AND INTEGRAL FUSE COVER/PULLER IN A NEMA 3R ENCLOSURE. PROVIDE XANTREX MODEL CB12H20-3R OR APPROVED EQUAL.
4. PROVIDE SHARP 235W PV MODLE (MODEL NU-U235FI) OR APPROVED EQUAL. MAXIMUM 37.0VDC OPEN CIRCUIT VOLTAGE RATING, 600VDC SYSTEM VOLTAGE RATING, AND 8.6A SHORT CIRCUIT CURRENT RATING.
5. MINIMUM CONDUCTOR AMPACITY AND OVERCURRENT DEVICE RATING PER NEC ARTICLE 690.8(A)(1) AND 690.8(B)(1).
   MODULE STRING SHORT CIRCUIT CURRENT = 8.6A
   MAXIMUM CURRENT FOR MODULE STRINGS = (8.6A)(1.25) = 10.8A
   MINIMUM CONDUCTOR AMPACITY AND OVERCURRENT DEVICE = (10.8A)(1.25) = 13.4A
6. CONDUCTOR AMPACITY DERATED TO 23.2A FOR 122F AMBIENT TEMPERATURE PER NEC TABLE 310.16.
7. PROVIDE 1 1/2"C-2 #2/0, 1 #6 GND.
8. MAXIMUM VOLTAGE AND CURRENT VALUES CALCULATED PER NEC ARTICLES 690.7(A) AND 690.8(B)(1) RESPECTIVELY.
   MAXIMUM VOLTAGE = (37.0VDC)(1.13)(14) = 585VDC
   MAXIMUM CURRENT = (8.6A)(1.25) = 10.75A
9. PROVIDE TYPE UF INSULATION FOR DIRECT SUNLIGHT INSTALLATION.
10. PV PANEL WIRING DIAGRAM INTERGRATED INTO SINGLE LINE DIAGRAM FOR CLARITY.
11. ALL WORK SHOWN FOR THE PHOTO-VOLTAIC SYSTEM SHOWN IN THIS CLOUDED AREA SHALL BE INCLUDED IN ADDITIVE BID OPTION #2. SEE BID SCHEDULE ON SHEET T-2.0,

CEC APPLICATION NOTES (2007 EDITION)

690-4(b) PHOTOVOLTAIC SOURCE CIRCUITS AND PHOTOVOLTAIC CIRCUITS SHALL NOT BE CONTAINED IN THE SAME RACEWAY, JUNCTION BOX OR FITTINGS AS FEEDERS OR BRANCH CIRCUITS OF OTHER SYSTEMS. CABLE TRAY/OUTLET BOX.

690-4(c) THE CONNECTIONS TO A MODULE OR PANEL SHALL BE ARRANGED SO THAT REMOVAL OF A MODULE OR PANEL FROM A PHOTOVOLTAIC SOURCE CIRCUIT DOSE NOT INTERRUPT A GROUNDED CONDUCTOR TO ANOTHER PHOTOVOLTAIC SOURCE CIRCUIT.

690-4(d) INVERTERS SHALL BE IDENTIFIED FOR USE IN SOLAR PHOTOVOLTAIC SYSTEMS.

690-5 ROOF MOUNTED DC PHOTOVOLTAIC ARRAYS LOCATED ON DWELLINGS SHALL BE PROVIDED WITH DC GROUND-FAULT PROTECTION TO REDUCE FIRE HAZARDS.

690-7(a) THE MAXIMUM SYSTEM OUTPUT CIRCUIT OR SOURCE CIRCUIT VOLTAGE SHALL BE COMPUTED AS THE SUM OF THE RATED OPEN CIRCUIT VOLTAGE OF SERIES - CONNECTED PHOTOVOLTAIC MODULES CORRECTED FOR LOWEST AMBIENT TEMPERATURE.

690-8(b) PHOTOVOLTAIC SYSTEM CURRENTS SHALL BE CONSIDERED CONTINUOUS. THE CIRCUIT CONDUCTORS AND OVER CURRENT DEVICES SHALL BE SIZE TO CARRY NOT LESS THAN 125 PERCENT OF THE MAXIMUM CURRENT, AS CALCULATED IN 690-8(a).

690-31(b) TYPES WE, UF AND USE SINGLE-CONDUCTOR CABLE SHALL BE PERMITTED IN PHOTOVOLTAIC SOURCE CIRCUITS. WHERE EXPOSED TO SUNLIGHT, TYPE UF CABLE, IDENTIFIED AS SUNLIGHT-RESISTANT, SHALL BE USED.

690-34 JUNCTION, PULL AND OUTLET BOXES LOCATED BEHIND MODULES OR PANELS SHALL BE INSTALLED SO THAT THE WIRING CONTAINED IN THEM CAN BE RENDERED ACCESSIBLE DIRECTLY OR BY DISPLACEMENT OD A MODULE(S) OR PANEL(S) SECURED BY REMOVABLE FASTENERS AND CONNECTED BY A FLEXIBLE WIRING SYSTEM.

690-42 THE DC CIRCUIT GROUNDING CONNECTION SHALL BE MADE AT ANY SINGLE POINT ON THE PHOTOVOLTAIC OUTPUT CIRCUIT. LOCATE GROUND CONNECTION AS CLOSE AS POSSIBLE TO PV SOURCE.

690-43 EXPOSED NONCURRENT-CARRYING METAL PARTS OF MODULE FRAMES, EQUIPMENT, AND CONDUCTOR ENCLOSURES SHALL BE GROUNDED REGARDLESS OF VOLTAGE.

690-45 THE EQUIPMENT GROUNDING CONDUCTOR SHALL BE SIZED IN ACCORDANCE WITH 250.122.

REGISTERED PROFESSIONAL ENGINEER
HARRY KAISER
No. E015151
Exp. 6-30-12
ELECTRICAL
STATE OF CALIFORNIA

DONN C. GILMORE & ASSOCIATES, INC.
Consulting Mechanical and Electrical Engineers
DCGA
4051 E. La Palma Ave., Ste. A
Anaheim, CA 92807
Ph.: 714.630.4291
Fax: 714.630.4805

DATE	SYM	REVISION	BY	A'PD

NATIONAL AERONAUTICS AND SPACE ADMINISTRATION
DRYDEN FLIGHT RESEARCH CENTER
EDWARDS, CA

DRAWING TITLE
ELECTRICAL SINGLE LINE DIAGRAM (CONT)

PROJECT TITLE
8-18-11
FACILITIES SUPPORT CENTER
100% FINAL DESIGN SUBMITTAL

APPROVALS	DATE
Chief, Facilities Engineering Branch, Office of Facilities, DAN CROWLEY	8-18-11
Project Requestor /Customer, DAN CROWLEY	8-18-11
Facilities Project Manager, GEMMA FLORES	8-18-11
Chief, Office of Protective Services, JOHN ZELLMER	8-18-11
Chief - Safety, Health, and Environmental Office, DAN MULLEN	8-18-11
DFRC Chief Information Officer, KEN NORLIN	8-18-11

DATE STRTD	11/04/10	DATE PRINTD	05/23/11
DRAWN BY			EDM-1703
SCALE	AS NOTED	TRADE SH. No.	
FILE NAME		E0.7	SHEET No. 163 of 195

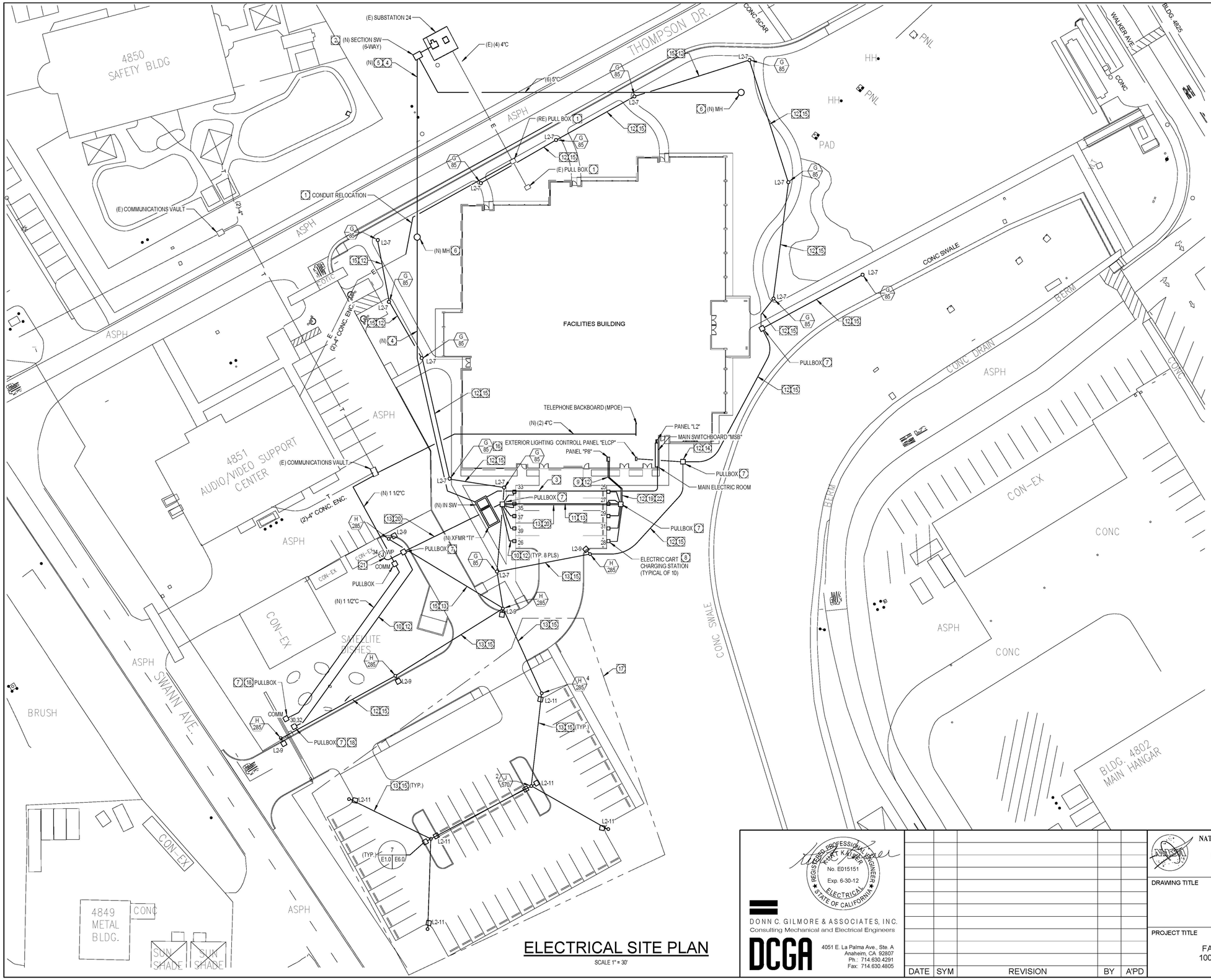

ELECTRICAL SITE PLAN

SCALE 1" = 30'

PLAN SPECIFIC NOTES:

1. RELOCATE EXISTING POWER PULLBOX TO NEW APPROXIMATE LOCATION SHOWN. RELOCATE BUILDING 4851 FEEDER SERVICE CONDUCTORS AND CONDUIT, AS SHOWN, AROUND FACILITY BUILDING FOUNDATION. PROVIDE WATER-PROOF SPLICE OF EXISTING B485 FEEDER CONDUCTORS FROM SUBSTATION 24 AT PULLBOX TO MATCHING FEEDER CONDUCTORS PULLED IN EXISTING CONDUIT TO B4851 MAIN SWITCHBOARD.
2. PROVIDE NEW PAD-MOUNTED 600A, 15VK, 6-WAY, SF6.
3. PROVIDE (3) 3"C-4 #500MCM, 1 #2/0 GND. (IN EACH).
4. PROVIDE 5"C - 3 #4/0, 15KV, 133% INSULATION, WITH #1/0 BARE COPPER GROUND WIRE.
5. PROVIDE (4) 5" CONDUIT SPARES, WITH PULL ROPES.
6. PROVIDE NEW PRECAST CONCRETE MANHOLE (6'x8'x6'D), WITH FLUSH TRFFIC RATED COVER.
7. PROVIDE PULL BOX (12"x16"xVARIABLE DEPTH) WITH FLUSH MOUNTED COVER.
8. PROVIDE ELECTRIC CART BOLLARD CHARGING STATION, RATED 120V, 16A, WITH INTEGRATED POWER METER, GROUND FAULT, AND OVER-CURRENT PROTECTION. PROVIDE WITH NEMA TYPE 5-20R RECEPTACLE UNDER LOCKING DOOR, AND NEMA TYPE 3R ENCLOSURE. PROVIDE COULOMB TECHNOLOGIES MODEL CT1001 BOLLARD SERIES OR APPROVED EQUAL. PROVIDE 3/4"C-1 #8, 1 #8 NEU, 1 #10 GND.
9. PROVIDE 1-1/2"C - 8 #8, 8 #8 NEU, AND 8#10 GND. FOR (8) DEDICATED 120V CART STATION CIRCUITS P8-25,27,29,31,33,35,37,39.
10. PROVIDE 1"C - 2 #8, 1#10 GND.
11. PROVIDE 1 1/4"C - 5 #8, 5 #8 NEU, AND 5 #10 GND.
12. PROVIDE PVC CONDUIT AT MINIMUM 18" BURIAL DEPTH.
13. PROVIDE PVC CONDUIT AT MINIMUM 24" BURIAL DEPTH.
14. PROVIDE 1"C - 2 #8, 2 #8 NEU, AND 2#10 GND.
15. PROVIDE 1"C - 1 #8, 1 #8 NEU, AND 1 #10 GND.
16. SEE SHEET E0.8 FOR LIGHTING CONTROL PANEL SCHEDULE AND REQUIREMENTS.
17. ALL WORK IN THIS PARKING LOT SHALL BE INCLUDED IN ADDITIVE BID OPTION #7. SEE BID SCHEDULE ON SHEET T-2.0.
18. PROVIDE CONTINUATION OF CONDUIT AND POWER CIRCUIT FOR ELECTRICAL, TO GATE MOTOR CONTROL PANEL TERMINATION, PER MANUFACTURER'S INSTRUCTIONS.
19. PROVIDE 1/4"C-5 #8, 3 #8 NEU, AND 4 #10 GND. FOR (2) DEDICATED 120V CART STATION CIRCUITS P8-26 AND P8-28, FOR 208V, 1-PHASE GATE MOTOR CIRCUIT P8-34.
20. PROVIDE 1"C-3 #8, 1 #8 NEU, 2 #10 GND.
21. PROVIDE 1"C-1 #8, 1 #8 NEU, 1 #10 GND.
22. PROVIDE 1" SPARE CONDUIT.

REGISTERED PROFESSIONAL ENGINEER
FRANK K. KAISER
No. E015151
Exp. 6-30-12
ELECTRICAL
STATE OF CALIFORNIA

DONN C. GILMORE & ASSOCIATES, INC.
Consulting Mechanical and Electrical Engineers
DCGA
4051 E. La Palma Ave., Ste. A
Anaheim, CA 92807
Ph.: 714.630.4291
Fax: 714.630.4805

DATE	SYM	REVISION	BY	A'PD

NATIONAL AERONAUTICS AND SPACE ADMINISTRATION

DRYDEN FLIGHT RESEARCH CENTER
EDWARDS, CA

DRAWING TITLE

ELECTRICAL SITE PLAN

PROJECT TITLE

8-18-11
FACILITIES SUPPORT CENTER
100% FINAL DESIGN SUBMITTAL

APPROVALS	DATE
Chief, Facilities Engineering & Assist Mgr, Office DAN CROWLEY	8-18-11
Project Requestor /Customer DAN CROWLEY	8-18-11
Facilities Project Manager GEMMA FLORES	8-18-11
Chief, Office of Protective Services JOHN ZELLMER	8-18-11
Chief - Safety, Health, and Environmental Office DAN MULLEN	8-18-11
DFRC Chief Information Officer KEN NORLIN	8-18-11

DATE STRTD	11/04/10	DATE PRNTD	05/23/11
DRAWN BY			EDM-1703
SCALE	AS NOTED	TRADE SH. No.	
FILE NAME		E1.0	SHEET No. 164 of 195

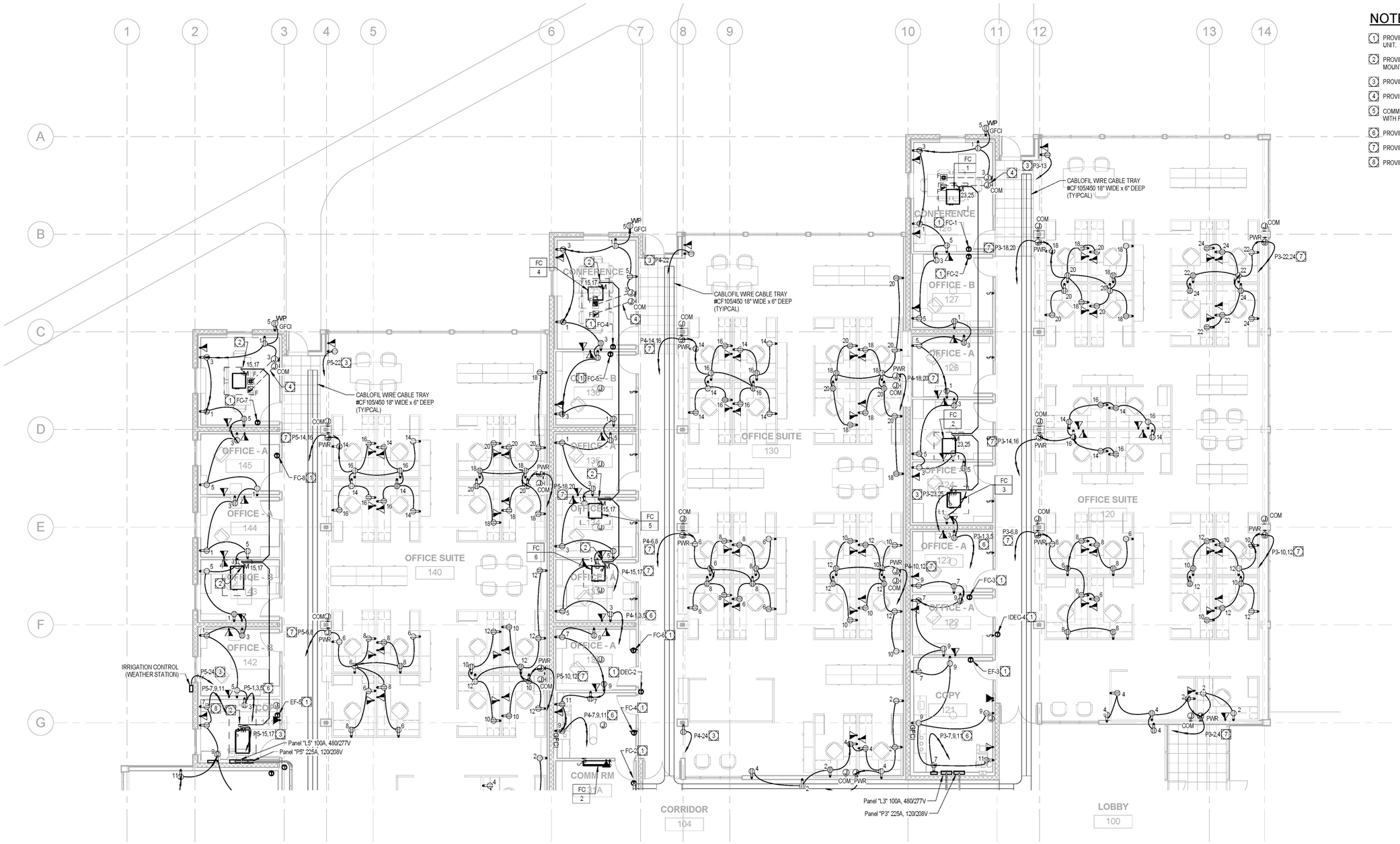

NOTES:

1. PROVIDE 1/2" CONDUIT, WITH PULL STRING, FROM THERMOSTAT TO ASSOCIATED MECHANICAL UNIT.
2. PROVIDE 208V, 2-POLE, FRACTIONAL HORSEPOWER MOTOR STARTER, WITH TOGGLE SWITCH, MOUNTED ADJACENT TO UNIT IN CEILING SPACE.
3. PROVIDE 3/4"C-2 #12, 1 #12 GND.
4. PROVIDE 2" CONDUIT TO CEILING SPACE WITH GROMMET END, AND TO FLOOR BOX.
5. COMMUNICATIONS ROOM BACKBOARD (3/4" THICK X 8' HIGH) TO BE INSTALLED ON FOUR WALLS WITH FIRE RESISTANT PAINT ON BOTH SIDES.
6. PROVIDE 3/4"C-4 #12, 1 #12 GND.
7. PROVIDE 3/4"C-3 #12, 1 #12 GND.
8. PROVIDE 3/4"C-3 #12, 2 #12 NEU, 1 #12 GND.

SCALE: 1/8" = 1'-0"

0 8 16 24 32

POWER AND SIGNAL PLAN - NORTH SEGMENT

SCALE: 1/8" = 1'-0"

REGISTERED PROFESSIONAL ENGINEER
FURAT KARAPET
No. E015151
Exp. 6-30-12
ELECTRICAL
STATE OF CALIFORNIA

DONN C. GILMORE & ASSOCIATES, INC.
Consulting Mechanical and Electrical Engineers
DCGA
4051 E. La Palma Ave., Ste. A
Anaheim, CA 92807
Ph.: 714.630.4291
Fax: 714.630.4805

DATE	SYM	REVISION	BY	A'PD

NATIONAL AERONAUTICS AND SPACE ADMINISTRATION
DRYDEN FLIGHT RESEARCH CENTER
EDWARDS, CA

DRAWING TITLE
POWER AND SIGNAL - NORTH SEGMENT

PROJECT TITLE
8-18-11
FACILITIES SUPPORT CENTER
100% FINAL DESIGN SUBMITTAL

APPROVALS		DATE
Chief, Facilities Engineering Division, Project Office DAN CROWLEY		8-18-11
Project Requestor /Customer DAN CROWLEY		8-18-11
Facilities Project Manager GEMMA FLORES		8-18-11
Chief, Office of Protective Services JOHN ZELLMER		8-18-11
Chief - Safety, Health, and Environmental Office DAN MULLEN		8-18-11
DFRC Chief Information Officer KEN NORLIN		8-18-11

DATE STRTD	11/04/10	DATE PRNTD	05/23/11
DRAWN BY			EDM-1703
SCALE	AS NOTED	TRADE SH. No.	
FILE NAME		E2.1	SHEET No. 165 of 195