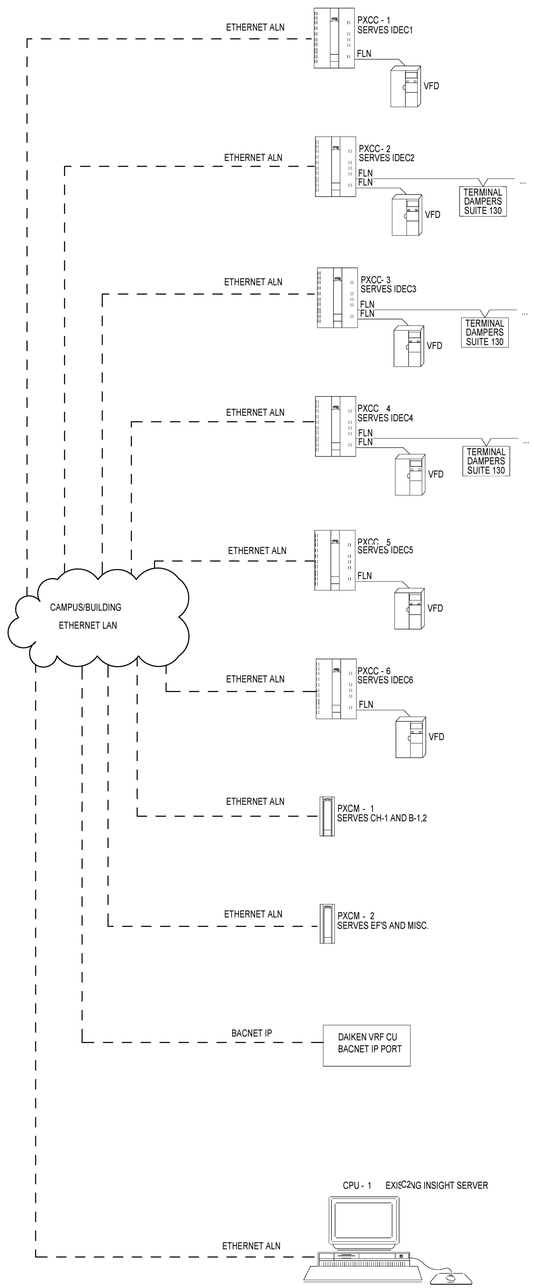

ALN RISER DIAGRAM

SCALE: NONE | M8.3 | M8.3 | 1

NASA Dryden Flight Research Center
Facilities Support Center (FSC) Building
DDC Points List - Rev 1.0 - 03.10.11

NASA Dryden FRC - Facilities Support Center Building (FSC)					
	POINT TYPE				
DESCRIPTION	**DO**	**DI**	**AO**	**AI**	**Notes:**
Energy Labs IDEC Unit (typ 6)					Dedicated controller (PXC) per IDEC
Combo Temp/RH (outside air)				2	one common for building
Outside Air Isolation Damper	6	12			"Open" & "Closed" status, for ATFP
Analog Filter DP transmitter				6	with local indicating transmitter
IDEC recirc pump	6				on/off for IDEC cooling
IDEC pump current draw				6	new CT on pump main power feed
IDEC discharge temp				6	
heating coil valve			6		
heating air temp				6	
cooling coil valve			6		
cooling coil temp				6	
SFAN VFD	6	12	6		points via FLN chip on Apogee network
Supply CFM				6	in-duct air flow station
Duct high static safety					hard-wired safety
Supply smoke detector		6			
supply temp				6	
zone temp				9	2 zone temps for IDEC 1,2, and 3
SUM OF POINTS BY TYPE	18	30	18	53	**119**
Open bay discharge dampers	**DO**	**DI**	**AO**	**AI**	**NOTES**
Suite 140 HVAC duct iso damper	5				
Suite 130 HVAC duct iso damper	5				
Suite 120 HVAC duct iso damper	5				
Suite 140 HVAC duct modu-pitch diffuser			5		
Suite 130 HVAC duct modu-pitch diffuser			5		
Suite 120 HVAC duct modu-pitch diffuser			5		
SUM OF POINTS BY TYPE	15	0	15	0	**30**
Daiken VRF Points (via BACnet/IP connection)	**DO**	**DI**	**AO**	**AI**	**NOTES**
FCU zone temp				15	
FCU cooling enable	15				
FCU fan enable	15				
FCU fan status		15			
FCU set point adjust			15		
Day/Night switchover	15				

Page 1

NASA Dryden Flight Research Center
Facilities Support Center (FSC) Building
DDC Points List - Rev 1.0 - 03.10.11

SUM OF POINTS BY TYPE	45	15	15	15	**90**
Air cooled chiller					
Chiller Enable	1				
Chiller Fault		1			
Chiller KW				1	
Chiller run status		1			
Chiller alarm		1			
CHW pump enable	1				
CHW pump status		1			
CHWS temp				1	
CHWR temp				1	
Chiller room OA intake louver	1	1			
SUM OF POINTS BY TYPE	**3**	**5**	**0**	**3**	**11**
Heating Hot Water System					
Boiler Enable	2				
Boiler Fault		2			
Boiler run status		2			
Boiler alarm		2			
HW pump enable	2				
HW pump status		2			
HWS temp				3	
HWR temp				1	
Boiler room OA intake louver	1	1			
SUM OF POINTS BY TYPE	**5**	**9**	**0**	**4**	**18**
GRAND TOTAL OF ALL POINTS	**86**	**59**	**48**	**75**	**268**

General information:

Include 8 hours site specific turnover training.

1. Electrical installation of the DDC system shall be in accordance with NASA standards and Siemens standards.
2. Includes mounting devices, wire, conduit, field and panel terminations labor and materials related to the installation of the above points.
3. All Points to be wired back to PXC panels or local controllers.
4. Include FLN comm trunk and 24VAC power to each new terminal controller

Related work by Mechanical Contractor

1. Provision of air/water balance.
2. Installation of new valve control valves as required. All valves located outdoors must be installed vertically.

Page 2

POINTS LIST

SCALE: NONE | M8.3 | M8.3 | 2

REGISTERED PROFESSIONAL ENGINEER
DONN C. GILMORE
No. 11541
Exp. 9-30-11
MECHANICAL
STATE OF CALIFORNIA

DONN C. GILMORE & ASSOCIATES, INC.
Consulting Mechanical and Electrical Engineers
DCGA
4051 E. La Palma Ave., Ste. A
Anaheim, CA 92807
Ph.: 714.630.4291
Fax: 714.630.4805

DATE	SYM	REVISION	BY	A'PD

NATIONAL AERONAUTICS AND SPACE ADMINISTRATION
DRYDEN FLIGHT RESEARCH CENTER
EDWARDS, CA

DRAWING TITLE
MECHANICAL CONTROLS

PROJECT TITLE
8-18-11
FACILITIES SUPPORT CENTER
100% FINAL DESIGN SUBMITTAL

APPROVALS		DATE
Chief, Facilities Engineering Assoc. Office **DAN CROWLEY**		8-18-11
Project Requestor /Customer **DAN CROWLEY**		8-18-11
Facilities Project Manager **GEMMA FLORES**		8-18-11
Chief, Office of Protective Services **JOHN ZELLMER**		8-18-11
Chief - Safety, Health, and Environmental Office **DAN MULLEN**		8-18-11
DFRC Chief Information Officer **KEN NORLIN**		8-18-11

DATE STRTD	11/04/10	DATE PRNTD	05/23/11
DRAWN BY		EDM-1703	
SCALE	AS NOTED	TRADE SH. No.	M8.3
FILE NAME		SHEET No. 139 of 195	

PLUMBING GENERAL NOTES

1. THE PLUMBING SYSTEM DESIGN, INSTALLATION AND MATERIALS SHALL CONFORM IN COMPLIANCE WITH THE FOLLOWING CODES AND STANDARDS AS ADOPTED AND AMENDED BY THE AUTHORITY HAVING JURISDICTION. NOTHING IN THESE DRAWINGS IS TO BE CONSTRUED TO PERMIT WORK NOT CONFORMING TO THESE CODES OR OTHER APPLICABLE TO THIS PROJECT. THE EDITION OF THE CALIFORNIA CODE OF REGULATIONS, TITLE 24 (CALIFORNIA BUILDING STANDARDS CODE) APPLIES TO ALL OCCUPANCIES AND CONSISTS OF THE FOLLOWING PARTS:
   - A. PART 1 - 2007 CALIFORNIA BUILDING STANDARDS ADMINISTRATIVE CODE
   - B. PART 2 - 2007 CALIFORNIA BUILDING CODE
   - C. PART 3 - 2007 CALIFORNIA ELECTRICAL CODE
   - D. PART 4 - 2007 CALIFORNIA MECHANICAL CODE
   - E. PART 5 - 2007 CALIFORNIA PLUMBING CODE
   - F. PART 6 - 2007 CALIFORNIA ENERGY CODE
   - G. PART 9 - 2007 CALIFORNIA FIRE CODE
   - H. PART 10 -2007 CALIFORNIA CODE FOR BUILDING CONSERVATION
   - I. 2002 NATIONAL FIRE PROTECTION ASSOCIATION (NFPA) 54
   - J. 2002 NATIONAL FIRE PROTECTION ASSOCIATION (NFPA) 99
   - K. HEALTH AND SAFETY CODE
2. PLUMBING QUALITY AND WEIGHTS OF MATERIALS, ALTERNATE METHODS OF CONSTRUCTION SHALL CONFORM TO CHAPTER 3 OF THE 2007 CALIFORNIA PLUMBING CODE.
3. CONTRACTOR SHALL COORDINATE ALL WORK SHOWN ON THESE DRAWINGS AND SPECIFICATIONS WITH ALL DISCIPLINES AND TRADES PRIOR TO SUBMITTAL OF BID AND INSTALLATION OF SYSTEM.
4. ALL PLUMBING FIXTURE LOCATIONS (WATER CLOSETS, LAVATORIES ETC.) ARE DIAGRAMMATIC AND CONTRACTOR SHALL REFER TO ARCHITECTURAL DRAWINGS FOR HANDICAP FIXTURES, EXACT LOCATIONS, MOUNTING HEIGHTS AND COLOR.
5. ANY DEVIATIONS FROM THE DRAWINGS OR SPECIFICATIONS SHALL BE BROUGHT TO THE ATTENTION OF THE GOVERNMENT REPRESENTATIVE PRIOR TO INSTALLATION.
6. THESE DRAWINGS DO NOT INCLUDE ALL NECESSARY SAFETY REQUIREMENTS. CONTRACTOR TO COMPLY TO SAFETY REQUIREMENTS SET FORTH BY THE LOCAL AUTHORITIES HAVING JURISDICTION.
7. CONTRACTOR SHALL VISIT THE PROJECT SITE PRIOR TO SUBMITTAL OF BID, FAMILIARIZE HIMSELF WITH EXISTING CONDITIONS AND DETAILS OF THE WORK, VERIFY DIMENSIONS IN THE FIELD AND ADVISE GOVERNMENT REPRESENTATIVE OF ANY DISCREPANCY. SUBMITTAL OF BID WILL VERIFY THAT THE CONTRACTOR HAS VISITED THE SITE.
8. TRAP PRIMERS FOR FLOOR DRAINS AND FLOOR SINKS AND WATER HAMMER ARRESTORS TO BE INSTALLED AS PER THE 2007 CPC AND THE LATEST EDITION OF THE AMERICAN SOCIETY OF SANITARY ENGINEERING (ASSE 1010) SIZING AND INSTALLATION REQUIREMENTS.
9. ALL SERVICE WATER HEATING EQUIPMENT TO BE IN COMPLIANCE WITH THE MODEL ENERGY CODE, REQUIREMENTS AND LABELED.
10. CONTRACTOR TO REFER TO PLUMBING FIXTURE SCHEDULE FOR INDIVIDUAL WASTE, VENT & WATER CONNECTIONS AT EACH PLUMBING FIXTURE.
11. ALL HOT & COLD WATER PIPING TO BE INSULATED AS PER 2007 CPC CODE REQUIREMENTS:

PIPE SIZE	INSULATION THICKNESS	INSULATION VALUE
1/2" - 1"	1-1/2"	R = 4.0
1-1/4" - 3"	1-1/2"	R = 4.0
3" AND LARGER	2"	R = 4.0

12. TEST SYSTEM(S) IN ACCORDANCE WITH REQUIREMENTS OF THE GOVERNING AUTHORITIES.
13. STEEL PLATE SUPPORTS FOR ALL WALL FIXTURES: SUPPORT WITH 3/8" THICK x 8" HIGH STEEL PLATES RECESSED AND BOLTED TO STUDS AND TAPPED FOR FIXTURE BOLTS. LENGTH OF PLATE AT LEAST ONE STUD BEYOND FIXTURE, UNLESS CARRIERS ARE SPECIFIED.
14. ALL PLUMBING WORK SHALL BE INSTALLED SO AS TO AVOID INTERFERENCE WITH ELECTRICAL AND MECHANICAL EQUIPMENT AND STRUCTURAL FRAMING.
15. ALL INDIRECT WASTE PIPING ON ROOF SHALL BE TYPE "M" COPPER SUPPORTED WITH PREASSEMBLED HIGH DENSITY POLYPROPYLENE PLASTIC SUPER SLEEPER SYSTEM. SLEEPERS ARE HEIGHT ADJUSTABLE AND SHALL BE SET IN MASTIC AT 6'-0" O.C. PIPING SHALL BE SLOPED TO AND TERMINATED AT AN APPROVED RECEPTOR.
16. ALL CLEANOUTS SHALL BE INSTALLED WHERE READILY ACCESSIBLE AND LOCATED AS PER CODE REQUIREMENTS. THE CONTRACTOR SHALL COORDINATE ALL CLEAN OUT LOCATIONS WITH EQUIPMENT, CABINETS, ETC., AND THE ARCHITECT PRIOR TO ANY INSTALLATION.
17. ALL PLUMBING FIXTURE VENTS TO TERMINATE A MIN. OF 12 INCHES FROM ANY VERTICAL SURFACE AND 25 FEET FROM OR TERMINATED 3'-0" ABOVE ANY OUTSIDE AIR INTAKES.
18. ALL PIPING DISCHARGING INTO FLOOR-SINKS AND/OR FLOOR-DRAINS TO HAVE A MINIMUM AIRGAP AS REQUIRED BY LOCAL CODES.
19. ALL VALVES, UNIONS, ETC. TO BE SAME SIZE AS LINE SIZE UNLESS OTHERWISE INDICATED ON DRAWINGS.
20. UNIONS SHALL BE PROVIDED AND INSTALLED AFTER EACH SCREW-TYPE VALVE AND PRIOR TO EQUIPMENT CONNECTIONS.
21. ALL EQUIPMENT SHALL BE LATERALLY SUPPORTED IN ALL DIRECTIONS TO RESIST A MINIMUM AIRGAP AS REQUIRED BY LOCAL CODES.
22. BEFORE FABRICATION OR INSTALLATION, THIS CONTRACTOR SHALL VERIFY EXACT LOCATIONS OF ALL MECHANICAL EQUIPMENT AND EQUIPMENT PROVIDED UNDER ANOTHER SECTION OF SPECIFICATIONS. EXACT ROUGH-IN LOCATIONS AND REQUIREMENTS SHALL BE COORDINATED IN FIELD.
23. IF SOILS REPORT INDICATES THAT LOCAL SOIL IS CORROSIVE, ALL UNDERGROUND METALLIC PIPE AND FITTINGS SHALL BE PROTECTED IN ACCORDANCE WITH THE SOILS ENGINEER'S RECOMMENDATIONS.
24. NO PIPING SHALL BE DIRECTLY EMBEDDED IN CONCRETE OR MASONRY WALLS OR FOOTING.
25. THE PLUMBING CONTRACTOR SHALL COORDINATE ALL REQUIREMENTS FOR ALL POINTS OF CONNECTION WITH THE GENERAL CONTRACTOR AND OTHER TRADES PRIOR TO BID.
26. ALL WASTE AND VENT PIPING SHALL SLOPE AT 2%. IF LESS THAN 2%, APPROVAL MUST BE OBTAINED FROM BUILDING OFFICIAL OR AUTHORITY HAVING JURISDICTION PRIOR TO INSTALLATION AND REFER TO NOTE 5.
27. ALL VALVES, TRAP PRIMERS, WATER HAMMER ARRESTORS OR OTHER EQUIPMENT SHOWN IN WALLS OR ABOVE NON-ACCESSIBLE CEILINGS SHALL BE INSTALLED BEHIND AN ACCESS PANEL.
28. ALL HORIZONTAL PIPING LINES EXTENDED AND CONNECTED TO EQUIPMENT SHALL BE RUN AT THE HIGHEST POSSIBLE ELEVATIONS AND NOT LESS THAN 6" ABOVE THE FLOOR TO PROVIDE CLEARANCE FOR CLEANING. AT WALL OR COLUMN LOCATIONS, PIPING ROUGH-IN SHALL BE STUBBED IN WALLS WHENEVER POSSIBLE.
29. THESE DRAWINGS SHALL BE READ IN CONJUNCTION WITH AND BE CONSIDERED TO BE A PART OF SEPARATE COMPLETE PLUMBING SPECIFICATION.
30. THE CONTRACTOR SHALL BE RESPONSIBLE FOR PATCHING AND REPAIRING ALL AREAS INCLUDING ADJACENT AREAS WHICH ARE EXCAVATED AND/OR DAMAGED BY HIS OPERATIONS. IN ADDITION, THE CONTRACTOR SHALL RESTORE TO THEIR ORIGINAL CONDITION ALL AREAS DAMAGED BY HIS OPERATIONS.
31. ALL CONNECTIONS TO EXISTING SERVICES SHALL BE MADE SUCH THAT INTERRUPTION TIME WILL BE AS SHORT AS POSSIBLE. THE CONTRACTOR SHALL GIVE THE GOVERNMENT REPRESENTATIVE SUFFICIENT NOTICE OF SUCH INTERRUPTION AND THE ACTUAL SHUT-DOWN TIME SHALL BE AT A TIME DESIGNATED BY THE GOVERNMENT REPRESENTATIVE.
32. ALL CUTTING OF EXISTING PAVING, WALKS AND/OR FLOORS SHALL BE BY MACHINE SAW CUTTING. HOLES FOR PIPES IN CONCRETE WALLS OR FLOORS SHALL BE DONE USING CORE DRILLING EQUIPMENT.
33. VERIFY EXACT LOCATIONS, DEPTH AND SIZE OF ALL PIPING TO WHICH CONNECTIONS ARE REQUIRED. FINAL CONNECTIONS TO EXISTING UTILITIES SHALL BE BY THIS CONTRACTOR.
34. ALL NEW OR REPAIRED DOMESTIC HOT AND COLD WATER SYSTEM SHALL BE DISINFECTED BY WATER-CHLORINIZATION PRIOR TO USE. THE METHOD SHALL BE PRESCRIBED BY THE HEALTH AUTHORITY OR CPC SECTION 609. BACTERIOLOGICAL TESTING SHALL BE PERFORMED BY INDEPENDENT THIRD PARTY TESTING LABORATORY. SEE SPECIFICATION SECTION 22 00 00, SUB SECTION 3.8.5
35. ALL PLUMBING FIXTURES SPECIFIED MEET THE MINIMUM FLOW REQUIREMENTS TO MEET "LEED" CREDITS

PLUMBING LEGEND & ABBREVIATION

SYMBOL	ABBREV	PIPE DESCRIPTION
W	W	WASTE
GW	GW	GREY WASTE
V	V	VENT
CW	CW	COLD WATER
HW	HW	HOT WATER
HWR	HWR	HOT WATER RETURN
G	G	GAS
CD	CD	CONDENSATE DRAIN
D	D	EVAP. COOLER DRAIN
SD	SD	STORM DRAIN
OD	OD	OVERFLOW DRAIN
RW	RW	RECLAIMED WATER
CA	CA	COMPRESSED AIR
	UP	PIPE UP/RISER
	DN	PIPE TEE DOWN
	DN	PIPE DOWN
	FCO	FLOOR CLEANOUT
	COTG	CLEANOUT TO GRADE
	WCO	WALL CLEANOUT
	SOV	SHUT-OFF VALVE
	CV	CHECK VALVE
	U	UNION
	GSOV	GAS COCK SHUT-OFF VALVE
	AGSOV	AUTOMATIC GAS SHUT-OFF VALVE
(E)	EXIST	EXISTING EQUIPMENT/PIPING
	POC	POINT OF CONNECTION
	POD	POINT OF DISCONNECTION
(#)	FU	FIXTURE UNIT
	ABV	ABOVE
	ADA	AMERICAN DISABILITIES ACT
	AFF	ABOVE FINISH FLOOR
	AFG	ABOVE FINISH GRADE
	AP	ACCESS PANEL
	BEL	BELOW
	CLG	CEILING
	CONN	CONNECTION
	CONT	CONTINUATION
	DN	DOWN
	FLR	FLOOR
	FU	FIXTURE UNITS
	GPM	GALLONS PER MINUTE
	ICW	INDUSTRIAL COLD WATER
	IE	INVERT ELEVATION
	INT	INTEGRAL
	PSI	POUNDS PER SQUARE INCH
	T/PRV	TEMPERATURE & PRESSURE RELIEF VALVE
	TYP	TYPICAL
	W/	WITH
GM	GM	GAS MEETER
	RSW	RECLAIMED WATER SYSTEM

NATURAL GAS PIPE SIZING

PIPE SIZE INCHES	MAX DELIVERY CAP (CFH) AT .5 INCH W.C. LENGTH IN FEET								
	10	20	30	40	50	60	70	80	90
1/2	174	119	96	82	73	66	61	56	53
3/4	363	249	200	171	152	138	127	118	111
1	684	470	377	232	286	259	239	222	208
1-1/4	1404	965	775	663	588	532	490	456	428
1-1/2	2103	1445	1161	993	880	798	734	683	641
2	4050	2784	2235	1913	1696	1536	1413	1315	1234

PLUMBING MATERIAL SCHEDULE

A. WATER PIPE - TYPE 'L' COPPER WITH WROUGHT COPPER FITTINGS AND 95/5 LEAD FREE SOLDER AT 3 PSI/100 FT WITH MAX VELOCITY OF 8 FT/S FOR COLD WATER AND 5 FT/S FOR HOT WATER.

B. ALL HOT WATER AND HOT WATER RETURN PIPING SHALL BE INSULATED WITH INSULATION HAVING A K-FACTOR OF 0.25.

C. SEWER AND VENT PIPE - ABS PIPE AND FITTINGS, GRAVITY AT 2% SLOPE FOR BELOW FLOOR, AND PVC PIPES & FITTINGS FOR ABOVE FLOOR INSTALLATION.

D. STORM AND OVERFLOW DRAIN - HUBLESS CAST IRON SOIL PIPE AND FITTINGS WITH HUSKY FOUR BANDED STAINLESS STEEL COUPLING, FOR ABOVE AND BELOW FLOOR.

E. GAS - BLACK STEEL SCHEDULE 40 SCREWED FITTING INSIDE, OUTSIDE PIPE SHALL BE POLYETHYLENE BUTYL-A WITH #12 BARE TRACE WIRE.

F. ANCHOR WATER SUPPLY PIPING IN WALL WITH CAST BRASS OR WROUGHT COPPER 90° DROP ELL FITTING AS MANUFACTURED BY NIBCO OR APPROVED EQUAL.

G. SUPPORT PIPING WITH CLEVIS OR SPLIT RING TYPE HANGERS. "PLUMBERS TAPE" OR WIRE IS NOT PERMITTED.

WATER CALCULATION

STREET PRESSURE (ASSUMED)	70	PSI
SYSTEM DESIGN	70	PSI
PRESSURE LOSSES:		
STATIC 15 x 0.433	6.5	PSI
2 METER AT 60 GPM	3.5	PSI
RESIDUAL REQUIRED AT WATER CLOSET	30	PSI
PRESSURE REDUCING VALVE	0	PSI
BACKFLOW PREVENTER	12	PSI
SUB TOTAL PRESSURE LOSSES	52	PSI
PRESSURE AVAILABLE FOR FRICTION LOSS:		
SYSTEM DESIGN - SUB TOTAL LOSSES [70 - 52] =	16	PSI
SYSTEM DEVELOPED LENGTH 190 + 20% =	228	FT
[(16 x 100) / 228] = 7 PSI LOSS PER 100 FT		
COLD WATER MAX VELOCITY	8 FT/S	
HOT WATER MAX VELOCITY	5 FT/S	

WATER CALCULATION

PIPE SIZE	COLD WATER				HOT WATER		
	FLOW GPM	FL-TANK FIXT. UNIT	FL-VALVE FIXT. UNIT	VELOCITY FT./SEC.	FLOW GPM	FL-TANK FIXT. UNIT	VELOCITY FT./SEC.
1/2"	2	1	1	-	2	1	-
3/4"	5	6	6	-	5	6	-
1"	10	16	16	-	10	16	-
1-1/4"	19	28	28	-	19	28	-
1-1/2"	30	54	54	-	30	54	-
2"	55	151	151	-	55	151	-
2-1/2"	93	347	347	-	93	347	-
3"	125	506	506	-	125	506	-

PLUMBING FIXTURE UNIT COUNT

FIXTURE	QUANTITY	FIXTURE UNITS - F.U.			
		C.W.	WASTE	SUB-TOTAL C.W.	SUB-TOTAL WASTE
WATER CLOSET	11	10	6	110	66
LAVATORY	8	1	1	8	8
URINAL	4	5	2	20	8
MOP SINK	2	3	4	6	8
KITCHEN SINK	1	2	2	2	2
FLOOR DRAIN	10	-	2	-	20
DRINKING FOUNTAIN	2	1	1	2	2
HOSE BIBB	3	5	-	15	-
FLOOR SINK	1	-	6	-	6
SHOWERS	6	2	2	12	12
TOTAL				175 F.U.	132 F.U.

REGISTERED PROFESSIONAL ENGINEER
DONN C. GILMORE
No. 11641
Exp. 9-30-11
MECHANICAL
STATE OF CALIFORNIA

DONN C. GILMORE & ASSOCIATES, INC.
Consulting Mechanical and Electrical Engineers
DCGA
4051 E. La Palma Ave., Ste. A
Anaheim, CA 92807
Ph.: 714.630.4291
Fax: 714.630.4805

DATE	SYM	REVISION	BY	A'PD

NATIONAL AERONAUTICS AND SPACE ADMINISTRATION
DRYDEN FLIGHT RESEARCH CENTER
EDWARDS, CA

DRAWING TITLE
PLUMBING NOTES, LEGEND AND ABBREVIATIONS

PROJECT TITLE
8-18-11
FACILITIES SUPPORT CENTER
100% FINAL DESIGN SUBMITTAL

APPROVALS	DATE
Chief, Facilities Engineering Division/Asset Mgmt. Office DAN CROWLEY	8-18-11
Project Requestor /Customer DAN CROWLEY	8-18-11
Facilities Project Manager GEMMA FLORES	8-18-11
Chief, Office of Protective Services JOHN ZELLMER	8-18-11
Chief - Safety, Health, and Environmental Office DAN MULLEN	8-18-11
DFRC Chief Information Officer KEN NORLIN	8-18-11

DATE STRTD	11/04/10	DATE PRNTD	05/23/11
DRAWN BY			EDM-1703
SCALE	AS NOTED	TRADE SH. No.	P0.1
FILE NAME		SHEET No. 140 of 195	