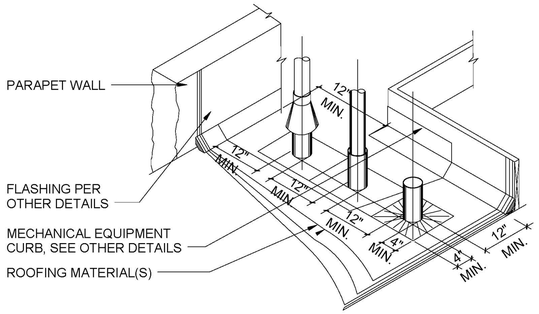

NOTE:
ITEMS IN THIS DETAIL ARE SHOWN FOR REFERENCE PURPOSES ONLY AND MAY NOT APPLY/OCCUR TO A SPECIFIC CONDITION OF THIS PROJECT, SEE OTHER DETAILS IN THIS SET FOR CLARIFICATION

PENETRATIONS

SCALE: 3" = 1'-0" | 6 | A4.0 | A11.1

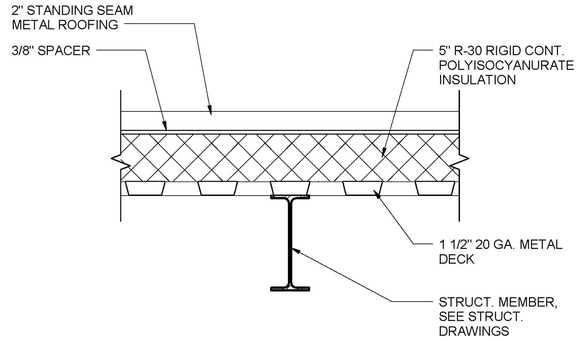

METAL STANDING SEAM ROOF

SCALE: 1 1/2" = 1'-0" | 3 | A4.0 | A11.1

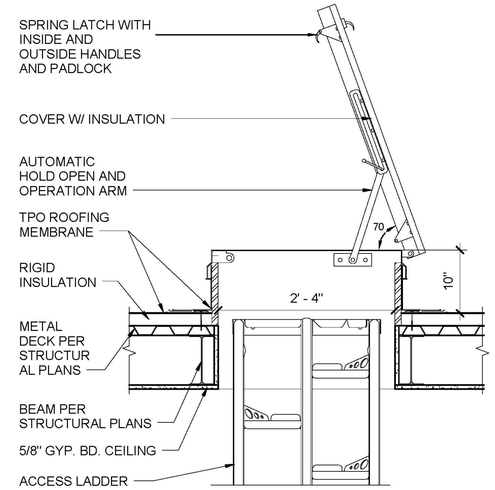

ROOF ACCESS HATCH

SCALE: 1" = 1'-0" | 1 | A4.2 | A11.1

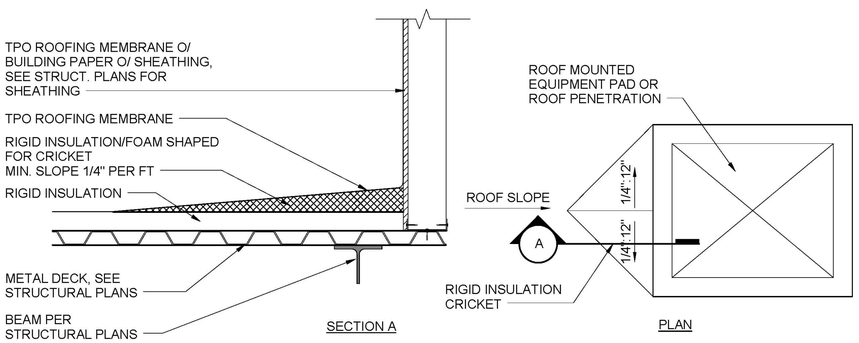

ROOF CRICKET

SCALE: 1 1/2" = 1'-0" | 7 | A4.0 | A11.1

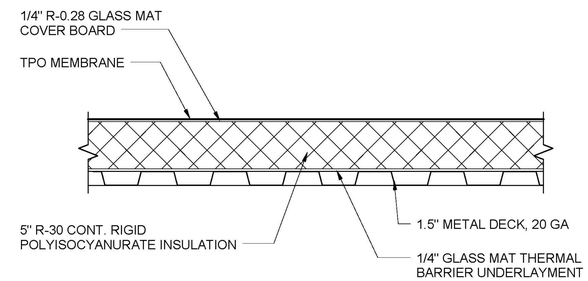

TYPICAL TPO ROOFING

SCALE: 1 1/2" = 1'-0" | 4 | A4.0 | A11.1

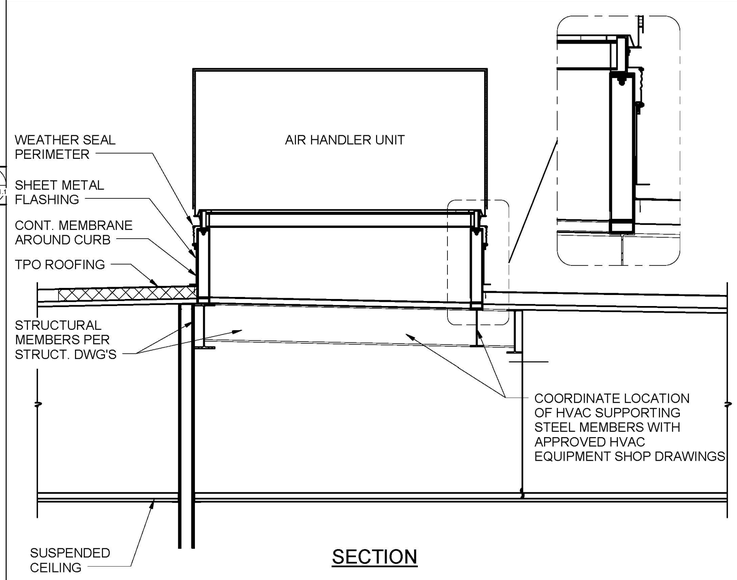

AIR HANDLING SECTION

SCALE: 1/2" = 1'-0" | 2 | A4.2 | A11.1

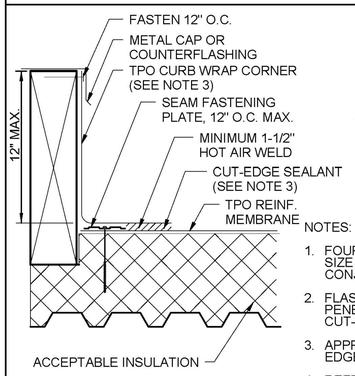

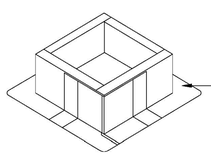

USE ONE TPO CURB WRAP CORNER AT EACH CORNER OF THE CURB. HOT AIR WELD ALL SEAMS IN ACCORDANCE WITH STANDARD SPLICING METHODS. REFER TO NOTE 1.

LIMITED TO 12" MAXIMUM FLASHING HEIGHT (CUSTOM SIZES AVAILABLE - HEIGHT AND OVERALL LENGTH)

NOTES:

1. FOUR (4) TPO CURB WRAP CORNERS WILL COMPLETELY FLASH A MAXIMUM CURB SIZE OF 6' X 6'. FOR LARGER CURBS USE THE TPO CURB WRAP CORNERS IN CONJUNCTION WITH ADDITIONAL SECTIONS OF TPO EMBRANE.
2. FLASHING MEMBRANE FASTENED APPROXIMATELY 12" ON CENTER. IF FASTENER PENETRATES METAL COUNTERFLASHING, USE NEOPRENE WASHER OR APPLY WATER CUT-OFF MASTIC UNDER COUNTERFLASHING OR CAULK FASTENER HEAD.
3. APPROXIMATELY 1/8" BEAD OF CUT-EDGE SEALANT IS REQUIRED ON THE CUT EDGES OF THE TPO FIELD WRAP CORNER.
4. REFER TO MANUFACTURER SPECIFICATIONS FOR ACCEPTABLE FASTENERS AND PLATES.

EQUIPMENT CURB

SCALE: 12" = 1'-0" | 8 | A4.0 | A11.1

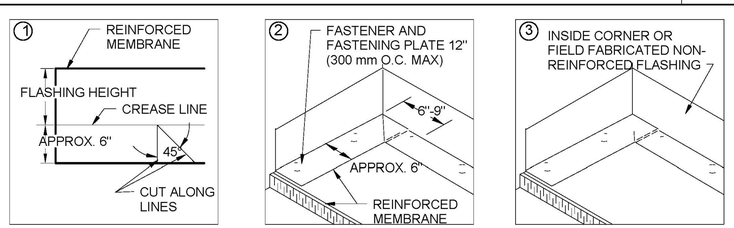

NOTES:

1. BEGIN INSTALLATION OF FASTENING PLATES 6" TO 9" FROM THE CORNER.
2. POSITION FASTENING PLATES 1/2" TO 1" FROM EDGE OF MEMBRANE.
3. APPROXIMATELY 1/8" DIAMETER BEAD OF CUT-EDGE SEALANT IS REQUIRED ON CUT EDGES OF REINFORCED MEMBRANE.
4. REFER TO MANUFACTURER SPECIFICATIONS FOR ACCEPTABLE FASTENERS AND PLATES.

EQUIPMENT CURB FLASHING

SCALE: 12" = 1'-0" | 5 | A4.0 | A11.1

LICENSED ARCHITECT J. BRUCE CAMINO C23740 Signature 10/31/11 RenewalDate STATE OF CALIFORNIA

DEVELOPMENT ONE, INC.
1611 East Fourth Street, Suite 250
Santa Ana, California 92701
J. Bruce Camino, Architect, AIA, NCARB
(714) 689-0298
(714) 648-0197 FAX

DATE	SYM	REVISION	BY	A'PD

NATIONAL AERONAUTICS AND SPACE ADMINISTRATION
DRYDEN FLIGHT RESEARCH CENTER
EDWARDS, CA

DRAWING TITLE
ROOF DETAILS

PROJECT TITLE 8-18-11
FACILITIES SUPPORT CENTER
100% FINAL DESIGN SUBMITTAL

APPROVALS		DATE
Chief, Facilities Engineering Division Project Manager Office DAN CROWLEY		8-18-11
Project Requestor /Customer DAN CROWLEY		8-18-11
Facilities Project Manager GEMMA FLORES		8-18-11
Chief, Office of Protective Services JOHN ZELLMER		8-18-11
Chief - Safety, Health, and Environmental Office DAN MULLEN		8-18-11
DFRC Chief Information Officer KEN NORLIN		8-18-11

DATE STRTD	11/10/10	DATE PRNTD	05/23/11
DRAWN BY		EDM-1703	
SCALE	AS NOTED	TRADE SH. No.	
FILE NAME		A11.1	SHEET No. 81 of 195

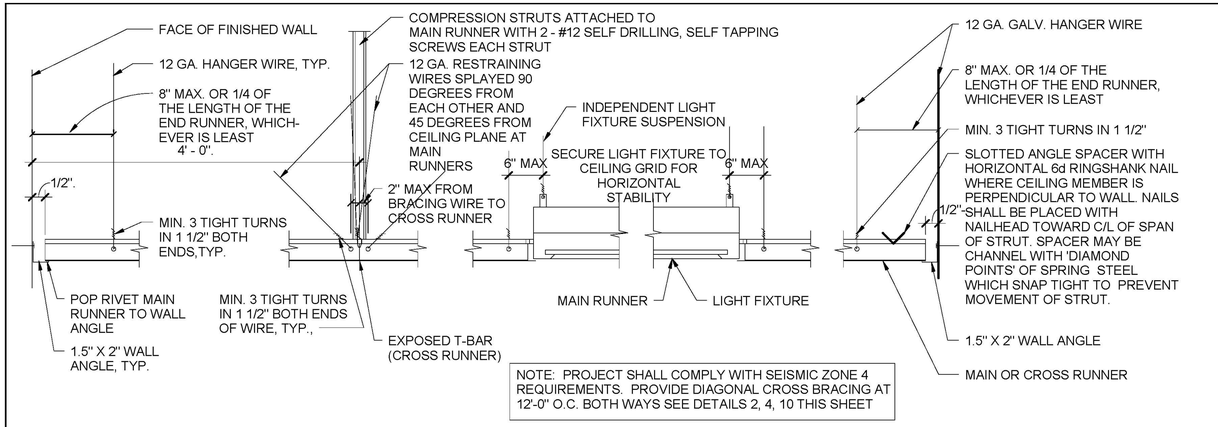

NOTE: PROJECT SHALL COMPLY WITH SEISMIC ZONE 4 REQUIREMENTS. PROVIDE DIAGONAL CROSS BRACING AT 12'-0" O.C. BOTH WAYS SEE DETAILS 2, 4, 10 THIS SHEET

TYPICAL SUSPENDED CEILING DETAIL

SCALE: 1" = 1'-0" | 7 | A3.1 A3.2 | A11.2

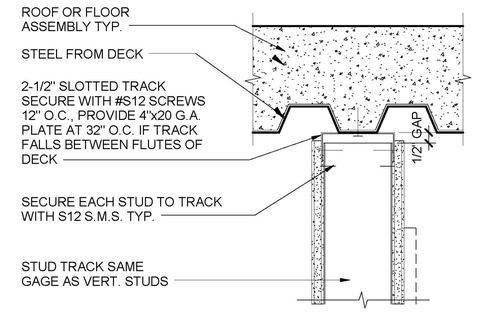

SLIP CONNECTION

SCALE: 3" = 1'-0" | 4 | A6.8 | A11.2

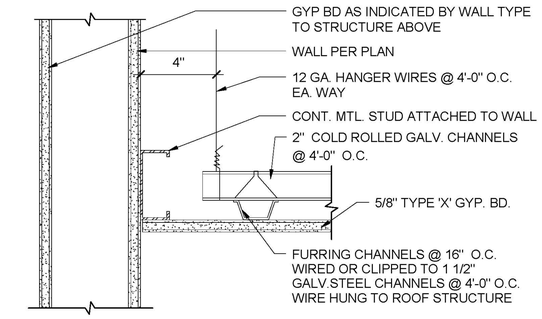

SUSPENDED GYP. BD. CEILING

SCALE: 3" = 1'-0" | 1 | A3.1 A3.2 | A11.2

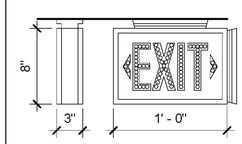

NOTES:

1. UNIT NOT AVAILABLE WITH WET LABEL
2. UNIT IS AVAILABLE WITH DAMP LABEL

LUMINAIRE REQUIREMENTS:

1. ALUMINUM, STEEL, THERMOPLASTIC OR POLYCARBONATE HOUSING.
2. BRUSHED ALUMINUM, THERMOPLASTIC OR STEEL STENCIL WITH LETTERS 6 INCHES TALL AND 3/4" WIDE STROKES AND PUNCH-OUT FACE, FOR LED'S OR INTERNAL LED ILLUMINATION.
3. RED ILLUMINATION PROVIDED BY LIGHT EMITTING DIODES (LED). APPROXIMATELY 60 LED'S PER FACE.
4. CLEAR PROTECTIVE NON-BREAKABLE LENS TO PROTECT LED'S.
5. PROVIDE POWER FAILURE, BROWN-OUT PROTECTION AND SURGE PROTECTION.
6. PROVIDE NI-CAD BATTERY POWER AND SOLID STATE TYPE CHARGER.
7. PROVIDE UNIVERSAL ARROWS AND BLANK OFF PLATES.
8. PROVIDE SINGLE OR DOUBLE FACE. AS INDICATED
9. PROVIDE UNIVERSAL MOUNTING.
10. UNITS MOUNTED EXPOSED TO THE ELEMENTS OR IN CLASSIFIED AREAS SHALL HAVE A UL LABEL AS INDICATED
11. PROVIDE INTERNAL GREEN GROUNDING SCREW.
12. PROVIDE TEST BUTTON IN BOTTOM OF HOUSING.
13. PROVIDE INDICATOR LIGHTS IN FACE TO INDICATE WHEN UNIT IS ON NORMAL POWER OR BATTERY POWER.
14. HOUSING SHALL HAVE A WHITE FINISH, EXCEPT AS INDICATED OTHERWISE.

EXIT SIGN

SCALE: 1 1/2" = 1'-0" | 8 | A3.2 | A11.2

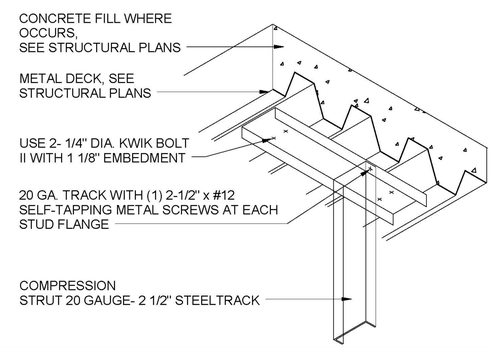

COMP. STRUT @ DECK

SCALE: 6" = 1'-0" | 5 | A11.2 | A11.2

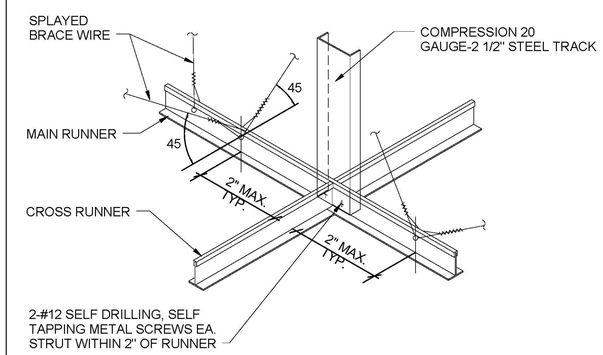

COMPRESSION STRUT TO T-BAR

SCALE: 6" = 1'-0" | 2 | A11.2 | A11.2

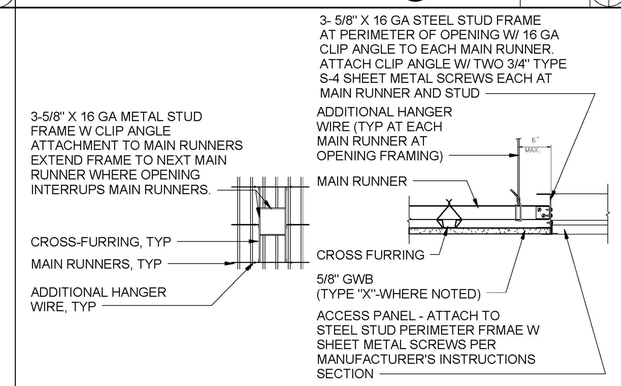

ACCESS PANEL CEILING DETAIL

SCALE: 1 1/2" = 1'-0" | 6 | A8.0 | A11.2

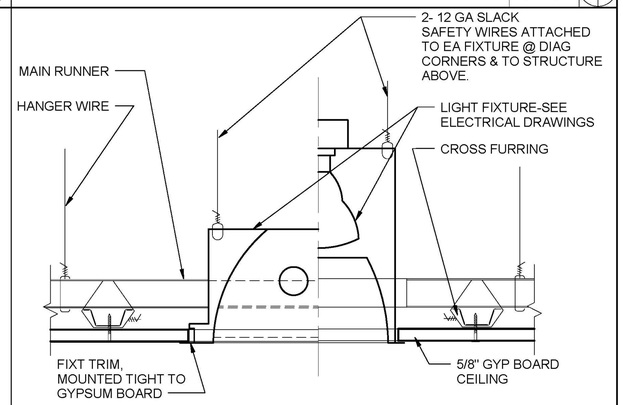

GYP BD CLG-TYP RECESS LIGHT FIXT

SCALE: 12" = 1'-0" | 3 | A8.0 | A11.2

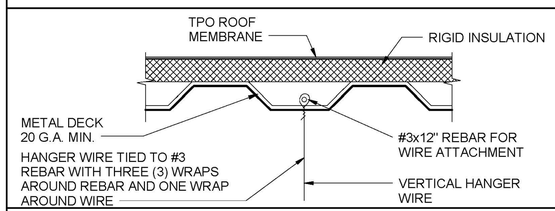

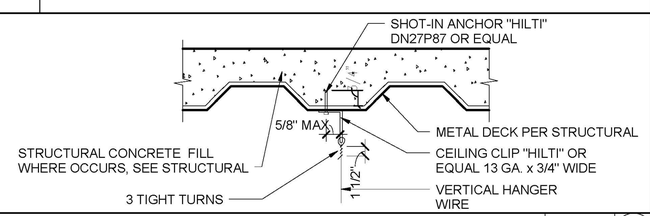

SPLAY WIRE CONNECTION

SCALE: 1" = 1'-0" | 10 | A11.2 | A11.2

LICENSED ARCHITECT
AIA BRUCE CAMINO
C23740
Signature
10/31/11
RenewalDate
STATE OF CALIFORNIA

DEVELOPMENT ONE, INC.
1611 East Fourth Street, Suite 250
Santa Ana, California 92701
J. Bruce Camino, Architect, AIA, NCARB
(714) 689-0298
(714) 648-0197 FAX

DATE	SYM	REVISION	BY	A'PD

NATIONAL AERONAUTICS AND SPACE ADMINISTRATION

DRYDEN FLIGHT RESEARCH CENTER
EDWARDS, CA

DRAWING TITLE

CEILING DETAILS

PROJECT TITLE 8-18-11

FACILITIES SUPPORT CENTER
100% FINAL DESIGN SUBMITTAL

APPROVALS	DATE
Chief, Facilities Engineering Division/ HQ Office DAN CROWLEY	8-18-11
Project Requestor /Customer DAN CROWLEY	8-18-11
Facilities Project Manager GEMMA FLORES	8-18-11
Chief, Office of Protective Services JOHN ZELLMER	8-18-11
Chief - Safety, Health, and Environmental Office DAN MULLEN	8-18-11
DFRC Chief Information Officer KEN NORLIN	8-18-11

DATE STRTD	11/10/10	DATE PRNTD	05/23/11
DRAWN BY		EDM-1703	
SCALE	AS NOTED	TRADE SH. No.	
FILE NAME		A11.2	SHEET No. 82 of 195

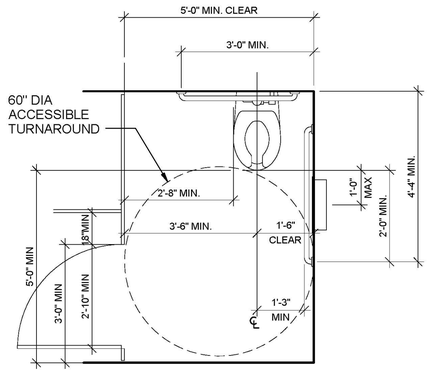

ACCESSIBLE TOILET STALL

SCALE:	
1/2" = 1'-0"	10 A8.1 A11.3

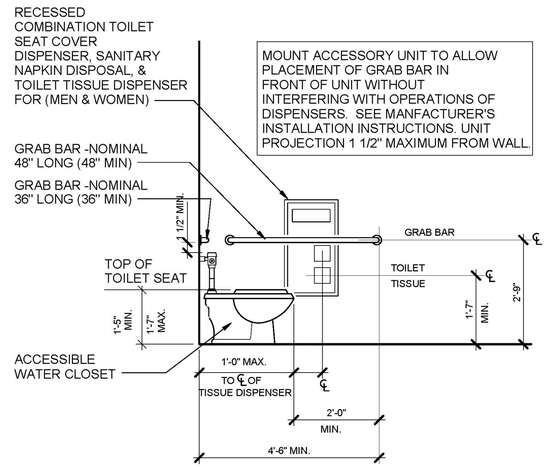

ACCESSIBLE TOILET STALL ELEV.

SCALE:	
N.T.S.	7 A8.1 A11.3

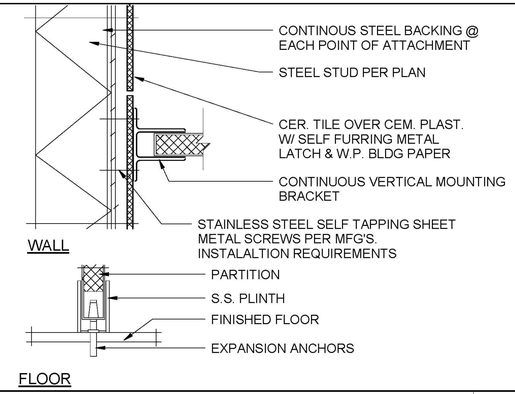

TOILET PARTITION ANCHORAGE

SCALE:	
12" = 1'-0"	4 A8.1 A11.3

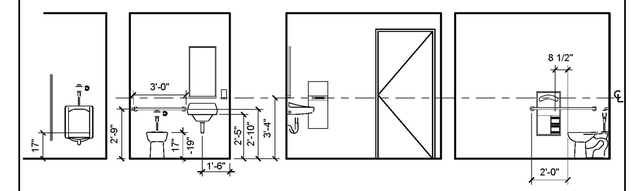

GRAB BAR DIAMETER SHALL BE 1-1/4" TO 1-1/2"

GRAB BARS SHALL SUPPORT 250 LBS POINT LOAD MIN.

TOILET PAPER DISPENSERS THAT CONTROL DELIVERY OR THAT DO NOT ALLOW CONTINUOUS PAPER FLOW SHALL NOT BE USED.

INSULATE WATER AND WASTE PIPES BELOW LAVATORY WITH ADA COMPLIANT CLOSED-CELL FOAM LINING ENCASED IN ONE-PIECE TAMPER RESISTANT VINYL JACKET COMPLETE WITH REQUIRED FASTENERS

ACCESSIBILITY STANDARDS

SCALE:	
12" = 1'-0"	1 A8.1 A11.3

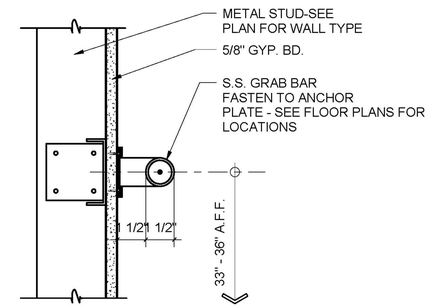

GRAB BAR DETAIL

SCALE:	
3" = 1'-0"	5 A8.1 A11.3

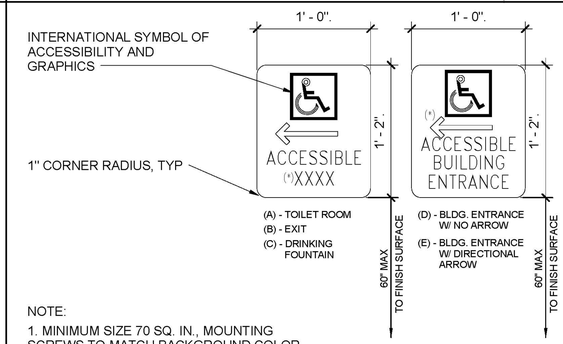

NOTE:

1. MINIMUM SIZE 70 SQ. IN., MOUNTING SCREWS TO MATCH BACKGROUND COLOR
2. SIGN MATERIAL SHALL BE ACID ETCHED ZINC.
3. VERIFY DIRECTION OF ARROW PRIOR TO FABRICATION

ACCESSIBLE SIGNAGE

SCALE:	
12" = 1'-0"	2 A8.1 A11.3

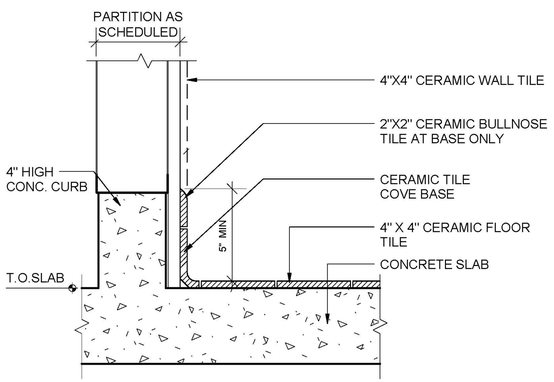

TYPICAL TILE BASE DETAIL

SCALE:	
3" = 1'-0"	11 A8.1 A11.3

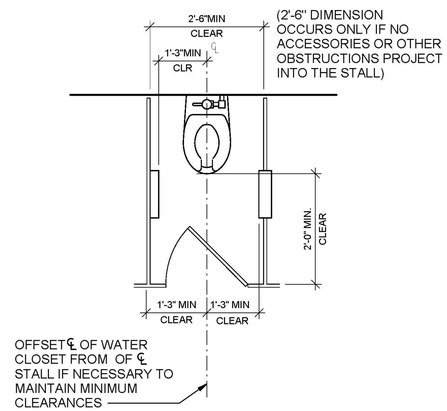

ACCESSIBLE TOILET STALL - TYPICAL

SCALE:	
N.T.S.	8 A8.1 A11.3

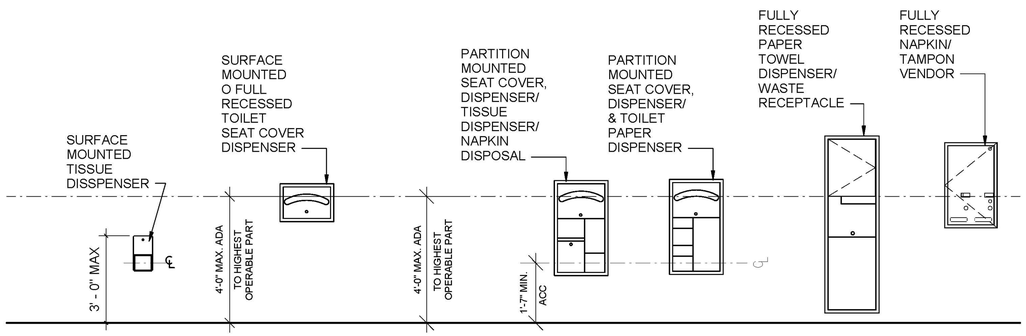

NOTE:

ATTACH SIGNS WITH SILICON ADHESIVE AND NON-CORROSIVE, VANDAL RESISTANT FLAT HEAD SCREWS

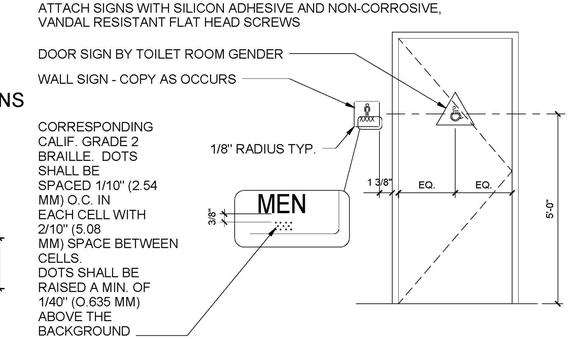

ACCESSIBLE TOILET RM. SIGNAGE

SCALE:	
12" = 1'-0"	3 A8.1 A11.3

ACCESSIBLE ACCESSORY MOUNTING HEIGHTS

SCALE:	
N.T.S.	9 A8.1 A11.3

LICENSED ARCHITECT
J. BRUCE CAMINO
C23740
Signature
10/31/11
RenewalDate
STATE OF CALIFORNIA

DEVELOPMENT ONE, INC.
1611 East Fourth Street, Suite 250
Santa Ana, California 92701
J. Bruce Camino, Architect, AIA, NCARB
(714) 689-0298
(714) 648-0197 FAX

DATE	SYM	REVISION	BY	A'PD

NATIONAL AERONAUTICS AND SPACE ADMINISTRATION

DRYDEN FLIGHT RESEARCH CENTER
EDWARDS, CA

DRAWING TITLE

TOILET ROOM ACCESSIBILITY DETAILS

PROJECT TITLE 8-18-11

FACILITIES SUPPORT CENTER
100% FINAL DESIGN SUBMITTAL

APPROVALS	DATE
Chief, Facilities Engineering & Assist Mgr Office DAN CROWLEY	8-18-11
Project Requestor /Customer DAN CROWLEY	8-18-11
Facilities Project Manager GEMMA FLORES	8-18-11
Chief, Office of Protective Services JOHN ZELLMER	8-18-11
Chief - Safety, Health, and Environmental Office DAN MULLEN	8-18-11
DFRC Chief Information Officer KEN NORLIN	8-18-11

DATE STRTD	02/22/11	DATE PRNTD	05/23/11
DRAWN BY			EDM-1703
SCALE	AS NOTED	TRADE SH. No.	
FILE NAME		A11.3	SHEET No. 83 of 195

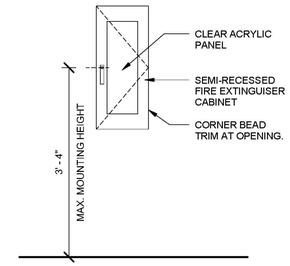

FIRE EXTINGUISHER ELEVATION

SCALE: 3/4" = 1'-0" | 4 A2.3 A11.4

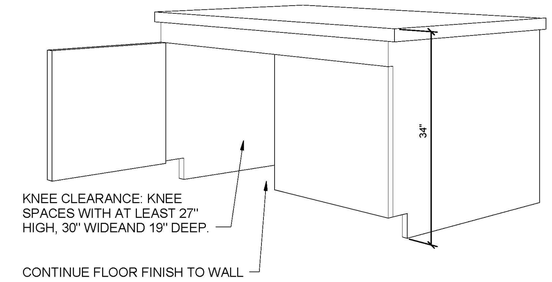

ACCESSIBLE CABINET ISO

SCALE: 1" = 1'-0" | 1 A8.2 A11.4

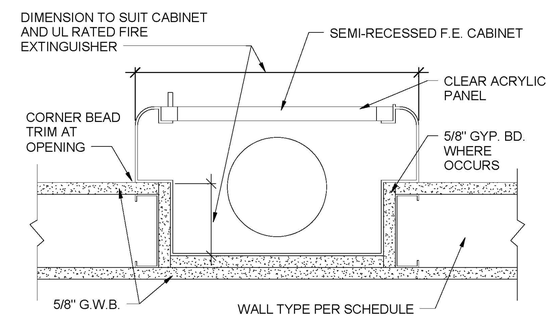

FIRE EXTINGUISHER CABINET

SCALE: 3" = 1'-0" | 5 A2.3 A11.4

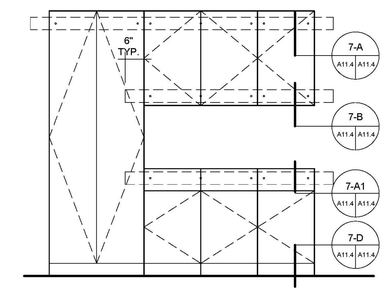

NOTES:
1. BACKING: 14 GA x 4" SHEET METAL SCREWED TO MIN OF 3-16 GA METAL STUDS. EVERY 4 TH STUD SHALL RUN SLAB TO SLAB.
2. SEE INTERIOR ELEVATIONS FOR CABINET CONFIGURATIONS AND DIMENSIONS

CABINET BACKING ELEVATION

SCALE: 1/2" = 1'-0" | 2 A8.2 A11.4

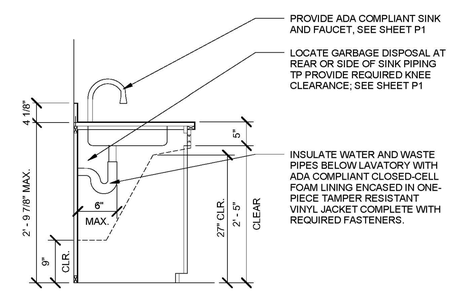

ACCESSIBLE SINK SECTION

SCALE: 3/4" = 1'-0" | 6 A8.2 A11.4

CASEWORK SECTION

SCALE: 1/2" = 1'-0" | 3 A8.2 A11.4

CABINET ANCHORAGE	REFERENCE
VERTICAL LOAD REQUIREMENT	TABLE NUMBER 23B TITLE 24
LATERAL FORCE REQUIREMENT	TABLE NUMBER 23P TITLE 24
CABINET SIZE	**ANCHOR SPACING**
3' WIDE CABINET	2 ANCHORS ACROSS PER CABINET
4' WIDE CABINET	3 ANCHORS ACROSS PER CABINET

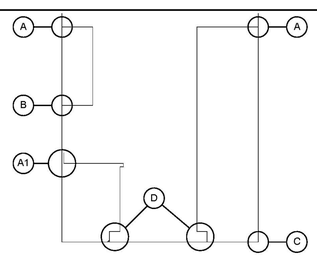

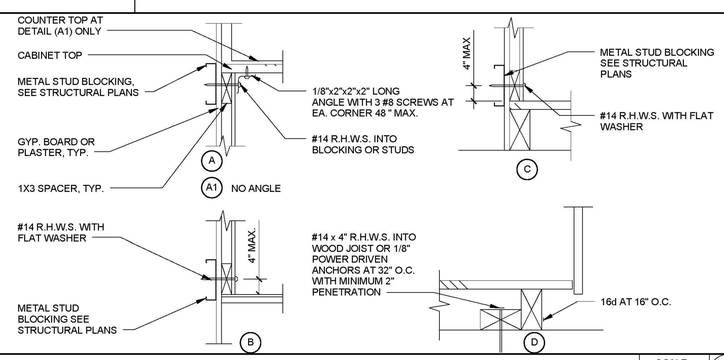

CABINET BACKING DETAILS

SCALE: 12" = 1'-0" | 7 A11.4 A11.4

LICENSED ARCHITECT
J. BRUCE CAMINO
C23740
Signature
10/31/11
RenewalDate
STATE OF CALIFORNIA

DEVELOPMENT ONE, INC.
1611 East Fourth Street, Suite 250
Santa Ana, California 92701
J. Bruce Camino, Architect, AIA, NCARB
(714) 689-0298
(714) 648-0197 FAX

DATE	SYM	REVISION	BY	A'PD

NATIONAL AERONAUTICS AND SPACE ADMINISTRATION

DRYDEN FLIGHT RESEARCH CENTER
EDWARDS, CA

DRAWING TITLE

MILLWORK DETAILS

PROJECT TITLE 8-18-11

FACILITIES SUPPORT CENTER
100% FINAL DESIGN SUBMITTAL

APPROVALS		DATE
Chief, Facilities Engineering Assist Mgr Office DAN CROWLEY		8-18-11
Project Requestor /Custom DAN CROWLEY		8-18-11
Facilities Project Manager GEMMA FLORES		8-18-11
Chief, Office of Protective Services JOHN ZELLMER		8-18-11
Chief - Safety, Health, and Environmental Office DAN MULLEN		8-18-11
DFRC Chief Information Officer KEN NORLIN		8-18-11

DATE STRTD	11/10/10	DATE PRNTD	05/23/11
DRAWN BY			EDM-1703
SCALE	AS NOTED	TRADE SH. No.	
FILE NAME		A11.4	SHEET No. 84 of 195

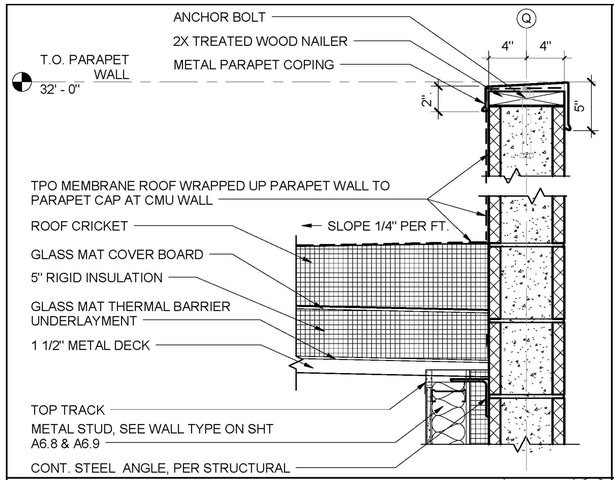

DETAIL SCALE: 1 1/2" = 1'-0" 8 A4.2 A12.0

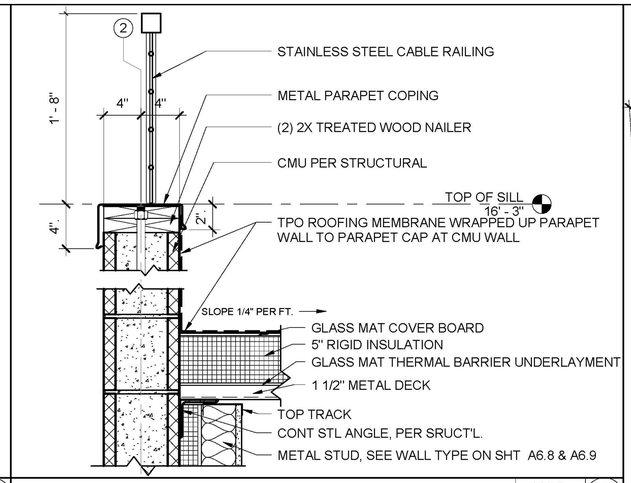

DETAIL SCALE: 1 1/2" = 1'-0" 9 A4.2 A12.0

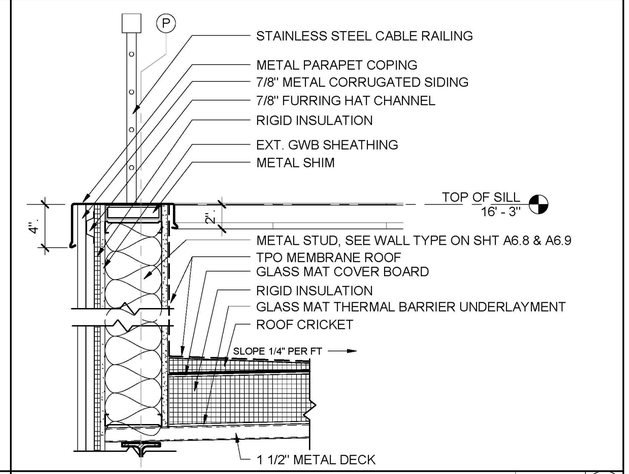

DETAIL SCALE: 1 1/2" = 1'-0" 7 A6.3 A12.0

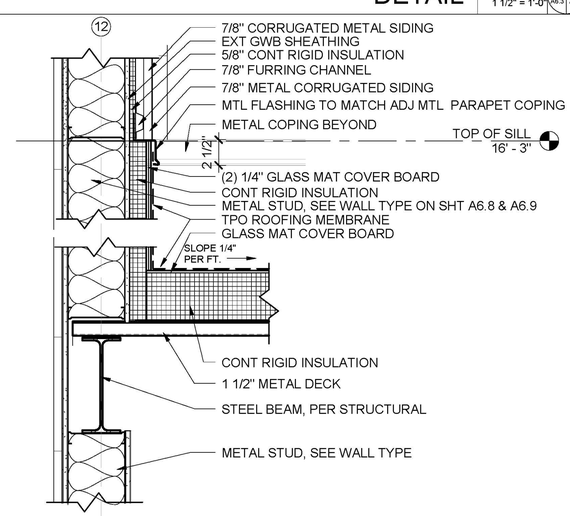

DETAIL SCALE: 1 1/2" = 1'-0" 5 A6.0 A12.0

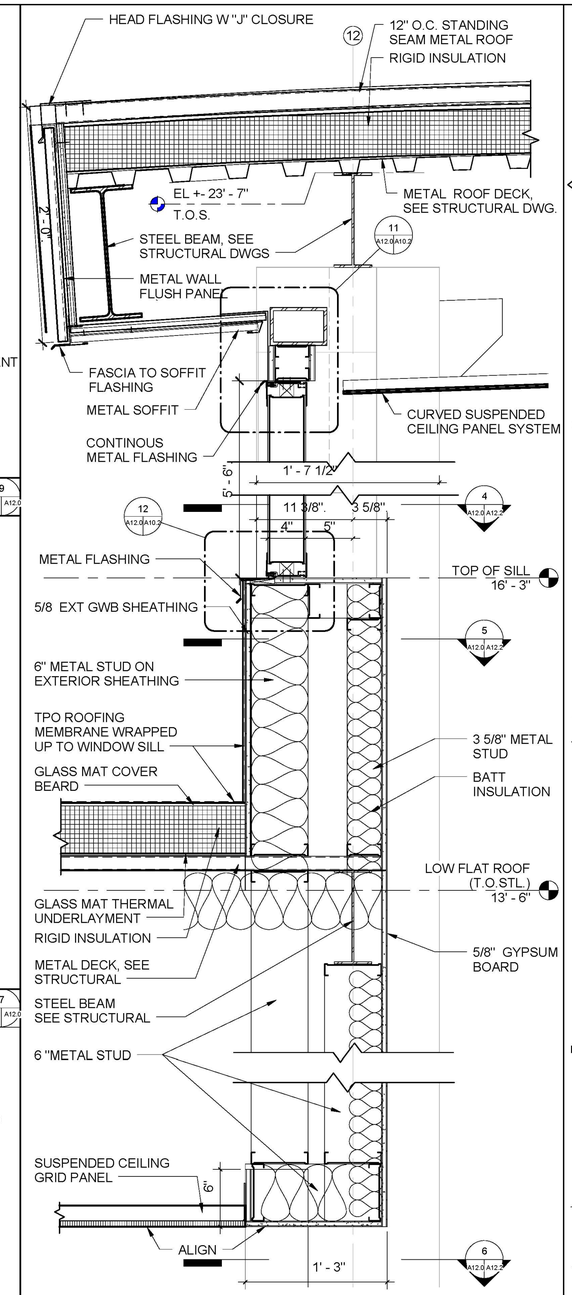

DETAIL SCALE: 1 1/2" = 1'-0" 2 A4.0 A12.0

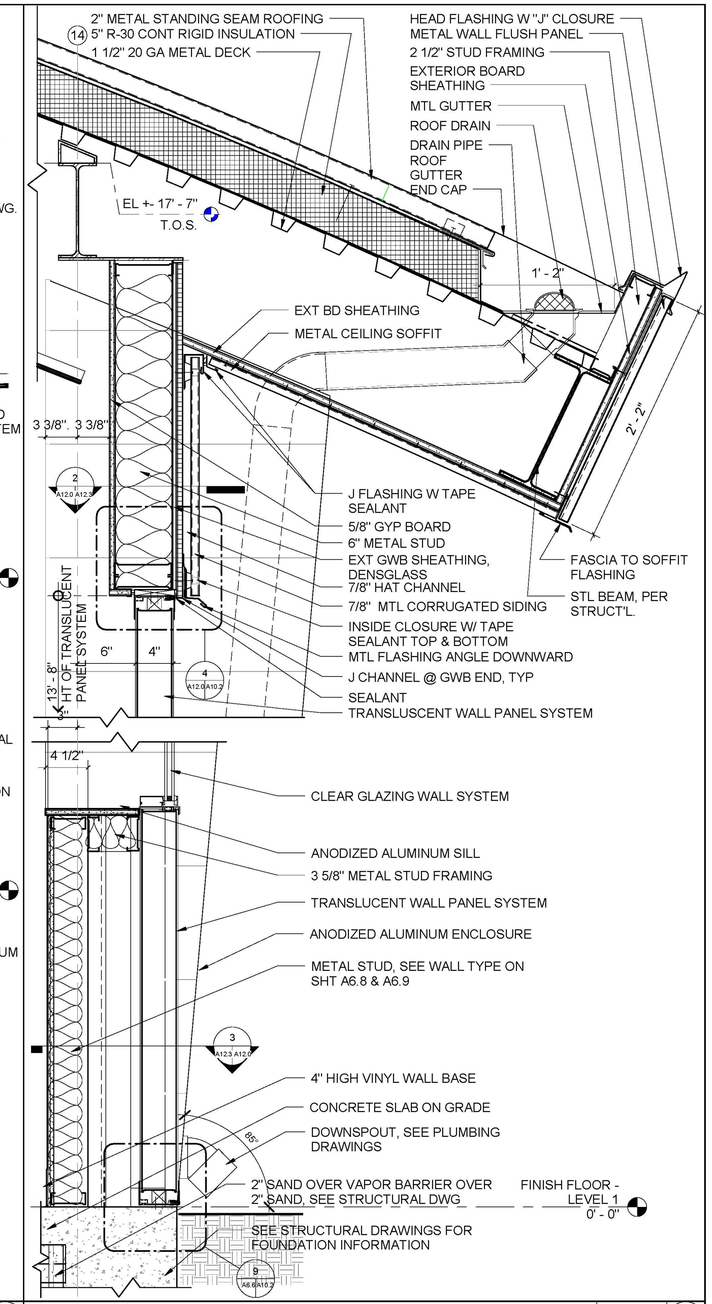

DETAIL SCALE: 1 1/2" = 1'-0" 1 A4.0 A12.0

LICENSED ARCHITECT J. BRUCE CAMINO C23740 Signature 10/31/11 RenewalDate STATE OF CALIFORNIA

DEVELOPMENT ONE, INC.
1611 East Fourth Street, Suite 250
Santa Ana, California 92701
J. Bruce Camino, Architect, AIA, NCARB
(714) 689-0298
(714) 648-0197 FAX

DATE	SYM	REVISION	BY	A'PD

NATIONAL AERONAUTICS AND SPACE ADMINISTRATION

DRYDEN FLIGHT RESEARCH CENTER
EDWARDS, CA

DRAWING TITLE

EXTERIOR DETAILS

PROJECT TITLE 8-18-11

FACILITIES SUPPORT CENTER
100% FINAL DESIGN SUBMITTAL

APPROVALS	DATE
Chief, Facilities Engineering Assessment Office DAN CROWLEY	8-18-11
Project Requestor /Customer DAN CROWLEY	8-18-11
Facilities Project Manager GEMMA FLORES	8-18-11
Chief, Office of Protective Services JOHN ZELLMER	8-18-11
Chief - Safety, Health, and Environmental Office DAN MULLEN	8-18-11
DFRC Chief Information Officer KEN NORLIN	8-18-11

DATE STRTD	12/08/10	DATE PRNTD	05/23/11
DRAWN BY		EDM-1703	
SCALE	AS NOTED	TRADE SH. No.	
FILE NAME		A12.0	SHEET No. 85 of 196