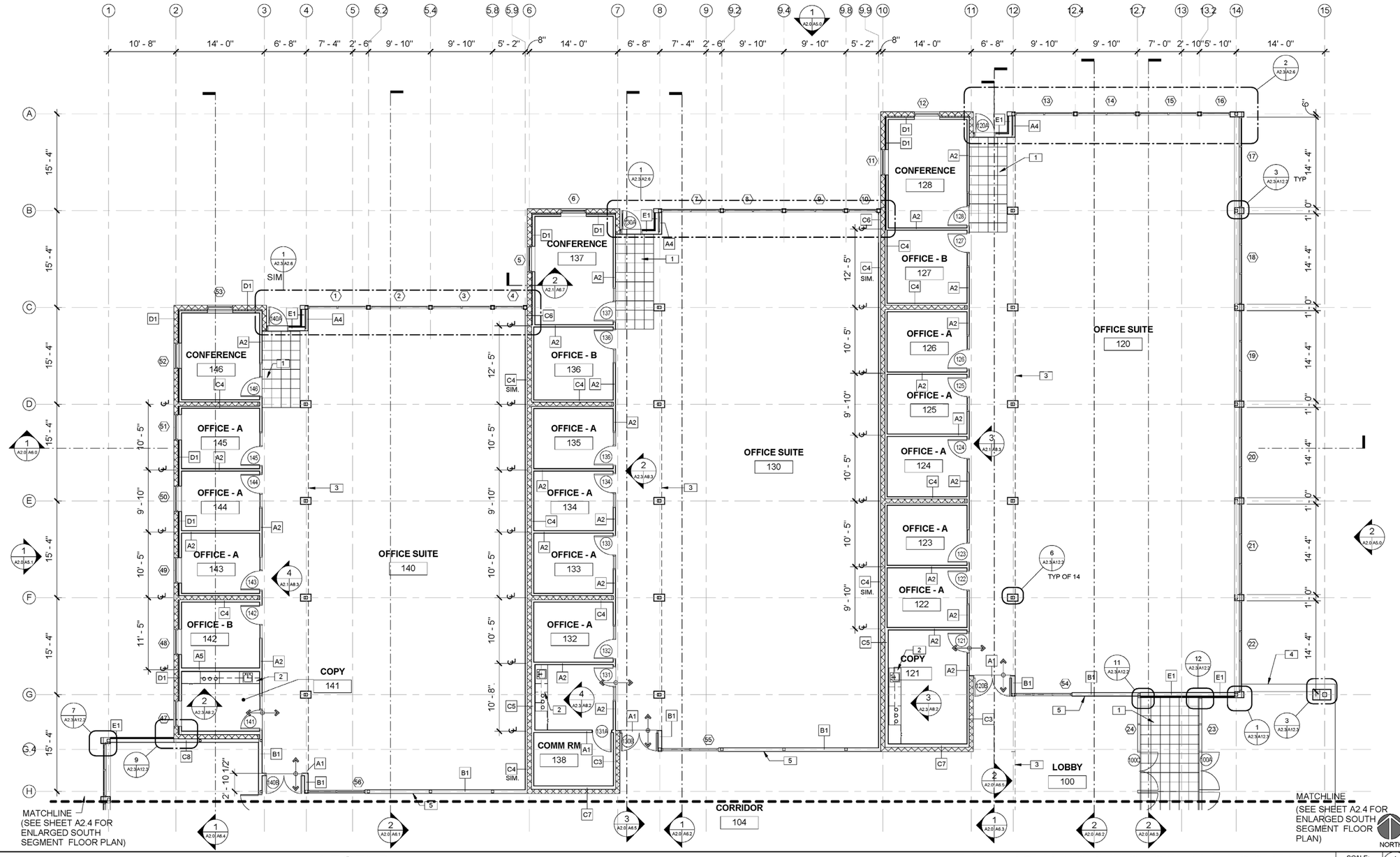

KEYNOTES:

1. ENTRY GRID SYSTEM - 18"X18"X3/4" REMOVABLE MODULAR S.S. OPEN GRID TILES IN RECESSED SLAB FLUSH WITH FLOOR FINISH, SEE SLAB PLAN FOR DIMENSIONS
2. BUILT-IN SUPPLY CABINET & RECYCLING STATION WITH SINK
3. LINE OF SOFFIT OR OPENING ABOVE
4. CONCRETE EXTERIOR LANDING, SEE LANDSCAPE DRAWINGS
5. ALIGN WALL CENTER LINE WITH COLUMN LINE

NOTES:

1. SEE ENLARGED ROOF PLANS A4.1 AND A4.2 FOR CLERESTORY WINDOW TAGS

LEGEND:

- FLOOR MATERIAL TRANSITION, SEE FINISH SCHEDULE
- XX — WALL TAGS -SEE WALL TYPE SECTIONS ON SHEET A6.8 & A6.9 FOR COMPLETE WALL TYPE INFORMATION
- METAL STUD WALL
- 1HR RATED METAL STUD WALL
- MASONRY WALL
- MASONRY WALL W/ STUD FURRING
- 101 — DOOR TAG, SEE DOOR TYPES & SCHEDULE ON SHEET A7.0
- 01 — WINDOW TAG, SEE WINDOW TYPES & SCHEDULE ON SHEET A7.1 & A7.2
- F.E.C. — SEMI-RECESSED FIRE EXTINGUISHER CABINET, SEE DETAIL 5/A11.4

ENLARGED NORTH SEGMENT FLOOR PLAN

SCALE: 1/8" = 1'-0" (1 A2.0 A2.3)

LICENSED ARCHITECT J. BRUCE CAMINO C23740 Signature 10/31/11 RenewalDate STATE OF CALIFORNIA

DEVELOPMENT ONE, INC.
1611 East Fourth Street, Suite 250
Santa Ana, California 92701
J. Bruce Camino, Architect, AIA, NCARB
(714) 689-0298
(714) 648-0197 FAX

DATE	SYM	REVISION	BY	A'PD

NATIONAL AERONAUTICS AND SPACE ADMINISTRATION
DRYDEN FLIGHT RESEARCH CENTER
EDWARDS, CA

DRAWING TITLE
NORTH SEGMENT FLOOR PLAN

PROJECT TITLE
8-18-11
FACILITIES SUPPORT CENTER
100% FINAL DESIGN SUBMITTAL

APPROVALS	DATE
Chief, Facilities Engineering & Asset Mgmt Office DAN CROWLEY	8-18-11
Project Requestor /Customer DAN CROWLEY	8-18-11
Facilities Project Manager GEMMA FLORES	8-18-11
Chief, Office of Protective Services JOHN ZELLMER	8-18-11
Chief - Safety, Health, and Environmental Office DAN MULLEN	8-18-11
DFRC Chief Information Officer KEN NORLIN	8-18-11

DATE STRTD	11/03/10	DATE PRNTD	05/23/11
DRAWN BY			EDM-1703
SCALE	AS NOTED	TRADE SH. No.	A2.3
FILE NAME		SHEET No. 41 of 196	

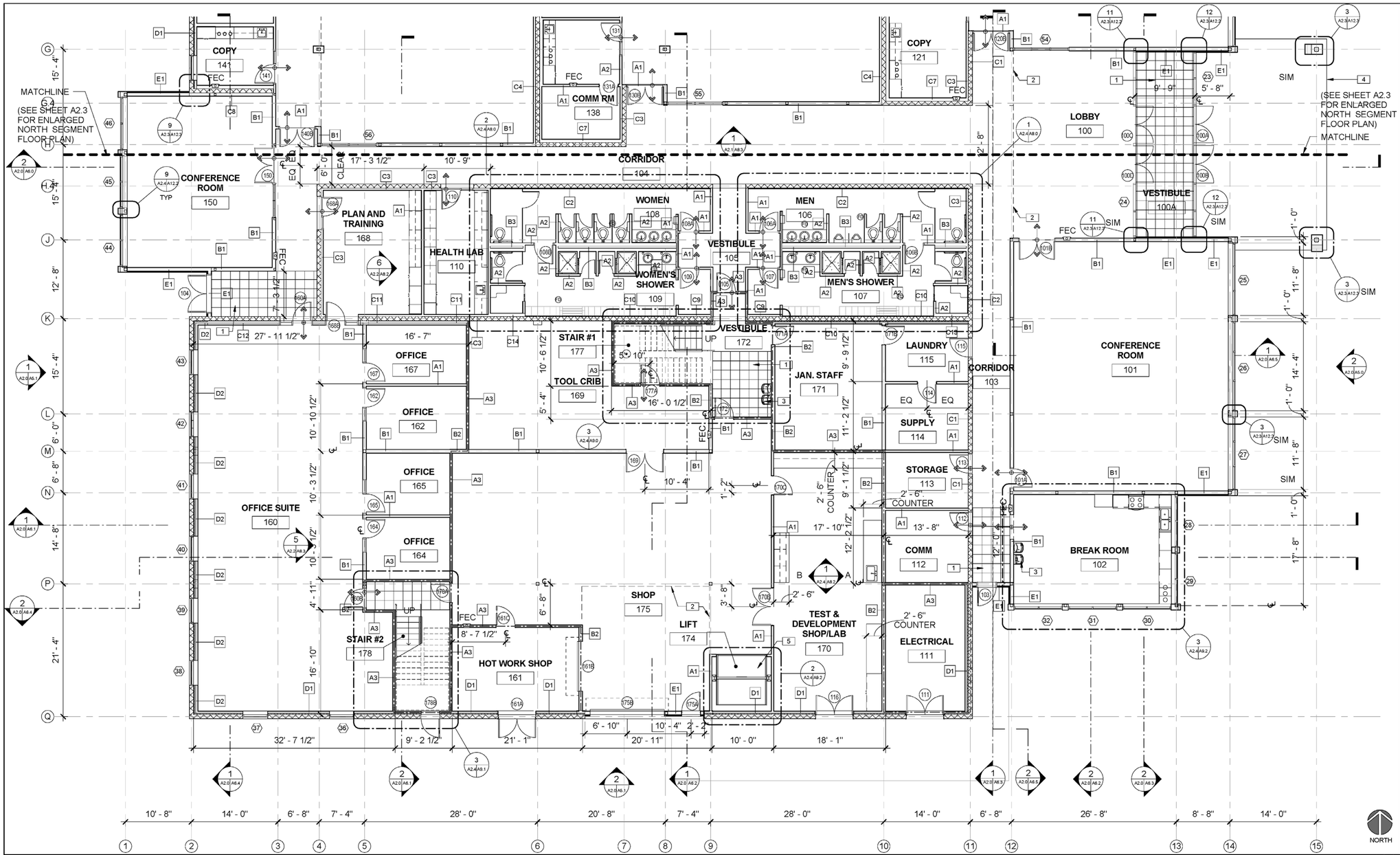

KEYNOTES:

1. ENTRY GRID SYSTEM - 18"X18"X3/4" REMOVABLE MODULAR S.S. OPEN GRID TILES IN RECESSED SLAB FLUSH WITH FLOOR FINISH, SEE SLAB PLAN FOR DIMENSIONS
2. LINE OF SOFFIT OR OPENING ABOVE
3. ACCESSIBLE DRINKING FOUNTAIN
4. CONCRETE EXTERIOR LANDING, SEE LANDSCAPE DRAWINGS
5. VERTICAL RECIPROCATING CONVEYOR

LEGEND:

- FLOOR MATERIAL TRANSITION, SEE FINISH SCHEDULE
- XX — WALL TAGS -SEE WALL TYPE SECTIONS ON SHEET A6.8 & A6.9 FOR COMPLETE WALL TYPE INFORMATION
- METAL STUD WALL
- 1HR RATED METAL STUD WALL
- MASONRY WALL
- MASONRY WALL W/ STUD FURRING
- 101 — DOOR TAG, SEE DOOR TYPES & SCHEDULE ON SHEET A7.0
- 01 — WINDOW TAG, SEE WINDOW TYPES & SCHEDULE ON SHEET A7.1 & A7.2
- F.E.C. — SEMI-RECESSED FIRE EXTINGUISHER CABINET, SEE DETAIL 5/A11.4

ENLARGED SOUTH SEGMENT FLOOR PLAN

SCALE: 1/8" = 1'-0" (1 A2.0 A2.4)

LICENSED ARCHITECT J. BRUCE CAMINO C23740 Signature 10/31/11 RenewalDate STATE OF CALIFORNIA

DEVELOPMENT ONE, INC.
1611 East Fourth Street, Suite 250
Santa Ana, California 92701
J. Bruce Camino, Architect, AIA, NCARB
(714) 689-0298
(714) 648-0197 FAX

DATE	SYM	REVISION	BY	A'PD

NATIONAL AERONAUTICS AND SPACE ADMINISTRATION
DRYDEN FLIGHT RESEARCH CENTER
EDWARDS, CA

DRAWING TITLE
SOUTH SEGMENT FLOOR PLAN

PROJECT TITLE
8-18-11
FACILITIES SUPPORT CENTER
100% FINAL DESIGN SUBMITTAL

APPROVALS	DATE
Chief, Facilities Engineering and Asset Mgmt Office DAN CROWLEY	8-18-11
Project Requestor /Customer DAN CROWLEY	8-18-11
Facilities Project Manager GEMMA FLORES	8-18-11
Chief, Office of Protective Services JOHN ZELLMER	8-18-11
Chief - Safety, Health, and Environmental Office DAN MULLEN	8-18-11
DFRC Chief Information Officer KEN NORLIN	8-18-11

DATE STRTD	11/03/10	DATE PRINTD	05/23/11
DRAWN BY			EDM-1703
SCALE	AS NOTED	TRADE SH. No.	
FILE NAME		A2.4	SHEET No. 42 of 196

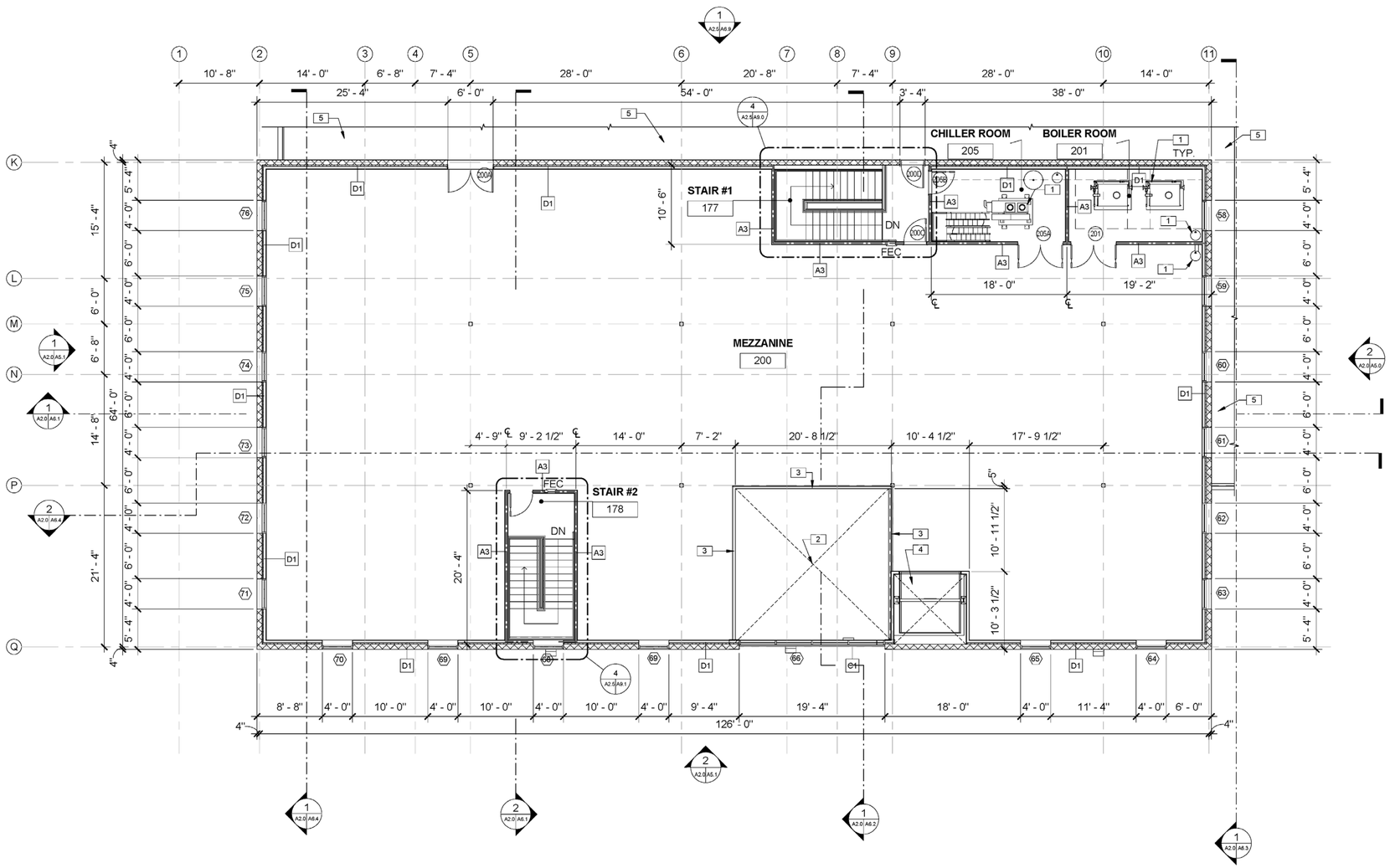

KEYNOTES:

1. SEE MECHANICAL DRAWINGS FOR EQUIPMENT LAYOUT AND INFORMATION
2. OPEN TO BELOW
3. 42" HIGH METAL GUARDRAIL
4. VERTICAL RECIPROCATING CONVEYOR
5. ROOF AREA, SEE A4.0

NORTH

LEGEND:

- FLOOR MATERIAL TRANSITION, SEE FINISH SCHEDULE
- XX — WALL TAGS -SEE WALL TYPE SECTIONS ON SHEET A6.8 & A6.9 FOR COMPLETE WALL TYPE INFORMATION
- METAL STUD WALL
- 1HR RATED METAL STUD WALL
- MASONRY WALL
- MASONRY WALL W/ STUD FURRING
- 101 — DOOR TAG, SEE DOOR TYPES & SCHEDULE ON SHEET A7.0
- 01 — WINDOW TAG, SEE WINDOW TYPES & SCHEDULE ON SHEET A7.1 & A7.2
- F.E.C. — SEMI-RECESSED FIRE EXTINGUISHER CABINET, SEE DETAIL 5/A11.4

MEZZANINE FLOOR PLAN

SCALE: 1/8" = 1'-0"

LICENSED ARCHITECT — J. BRUCE CAMINO — No. C23740 — Signature — 10/31/11 RenewalDate — STATE OF CALIFORNIA

DEVELOPMENT ONE, INC.
1611 East Fourth Street, Suite 250
Santa Ana, California 92701
J. Bruce Camino, Architect, AIA, NCARB
(714) 689-0298
(714) 648-0197 FAX

DATE	SYM	REVISION	BY	A'PD

NATIONAL AERONAUTICS AND SPACE ADMINISTRATION
DRYDEN FLIGHT RESEARCH CENTER
EDWARDS, CA

DRAWING TITLE: MEZZANINE FLOOR PLAN

PROJECT TITLE: 8-18-11
FACILITIES SUPPORT CENTER
100% FINAL DESIGN SUBMITTAL

APPROVALS	DATE
Chief, Facilities Engineering Division/Office — DAN CROWLEY	8-18-11
Project Requestor /Customer — DAN CROWLEY	8-18-11
Facilities Project Manager — GEMMA FLORES	8-18-11
Chief, Office of Protective Services — JOHN ZELLMER	8-18-11
Chief - Safety, Health, and Environmental Office — DAN MULLEN	8-18-11
DFRC Chief Information Officer — KEN NORLIN	8-18-11

DATE STRTD	11/03/10	DATE PRNTD	05/23/11
DRAWN BY			EDM-1703
SCALE	AS NOTED	TRADE SH. No.	A2.5
FILE NAME		SHEET No. 43 of 196	

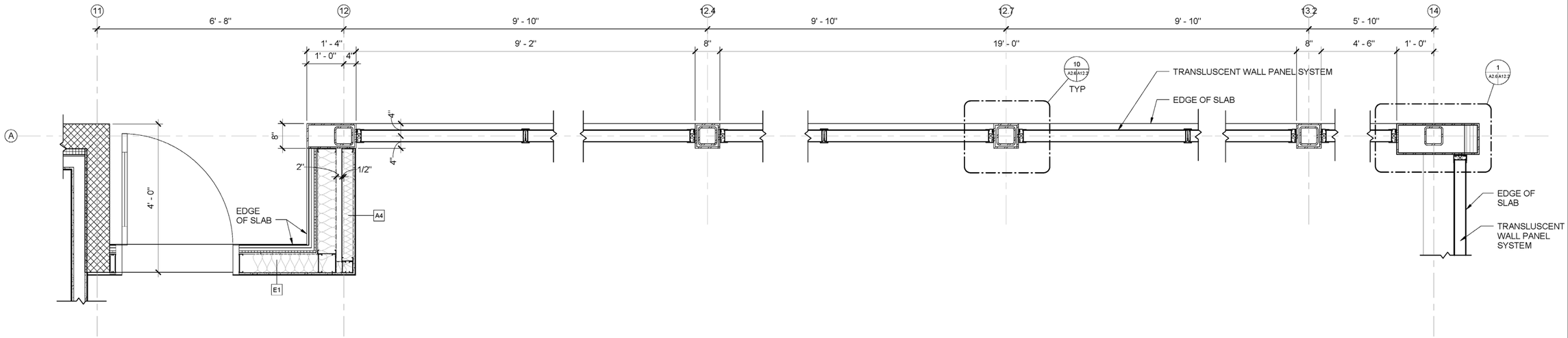

PARTIAL ENLARGED PLAN

SCALE: 3/4" = 1'-0" | 2 | A2.3 | A2.6

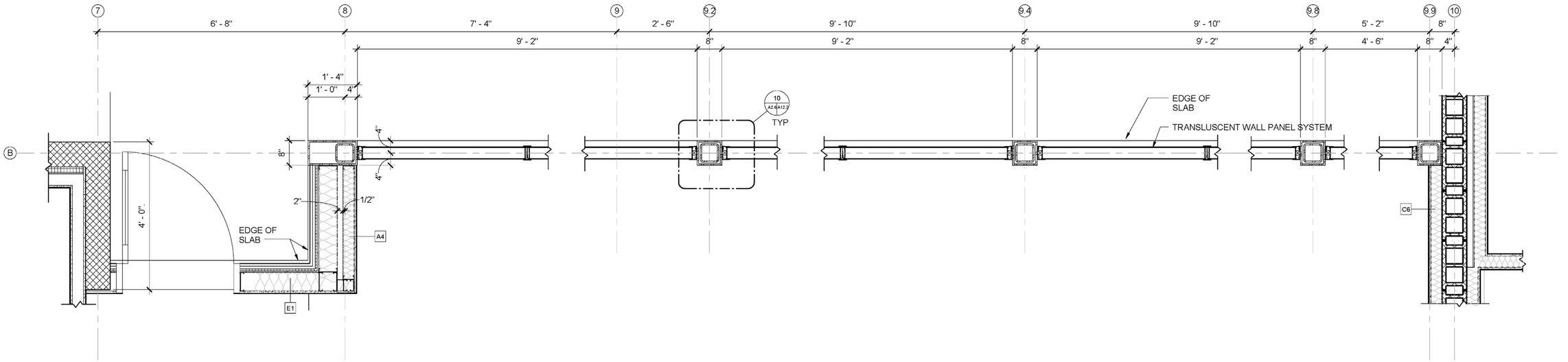

PARTIAL ENLARGED PLAN

SCALE: 3/4" = 1'-0" | 1 | A2.3 | A2.6

LICENSED ARCHITECT
J. BRUCE CAMINO
C23740
Signature
10/31/11
RenewalDate
STATE OF CALIFORNIA

DEVELOPMENT ONE, INC.
1611 East Fourth Street, Suite 250
Santa Ana, California 92701
J. Bruce Camino, Architect, AIA, NCARB
(714) 689-0298
(714) 648-0197 FAX

DATE	SYM	REVISION	BY	A'PD

NATIONAL AERONAUTICS AND SPACE ADMINISTRATION

DRYDEN FLIGHT RESEARCH CENTER
EDWARDS, CA

DRAWING TITLE

ENLARGED PARTIAL FLOOR PLAN

PROJECT TITLE

8-18-11
FACILITIES SUPPORT CENTER
100% FINAL DESIGN SUBMITTAL

APPROVALS	DATE
Chief, Facilities Engineering & Assist Mgmt. Office DAN CROWLEY	8-18-11
Project Requestor /Customer DAN CROWLEY	8-18-11
Facilities Project Manager GEMMA FLORES	8-18-11
Chief, Office of Protective Services JOHN ZELLMER	8-18-11
Chief - Safety, Health, and Environmental Office DAN MULLEN	8-18-11
DFRC Chief Information Officer KEN NORLIN	8-18-11

DATE STRTD	02/21/11	DATE PRNTD	05/23/11
DRAWN BY			EDM-1703
SCALE	AS NOTED	TRADE SH. No.	
FILE NAME		A2.6	SHEET No. 44 of 195

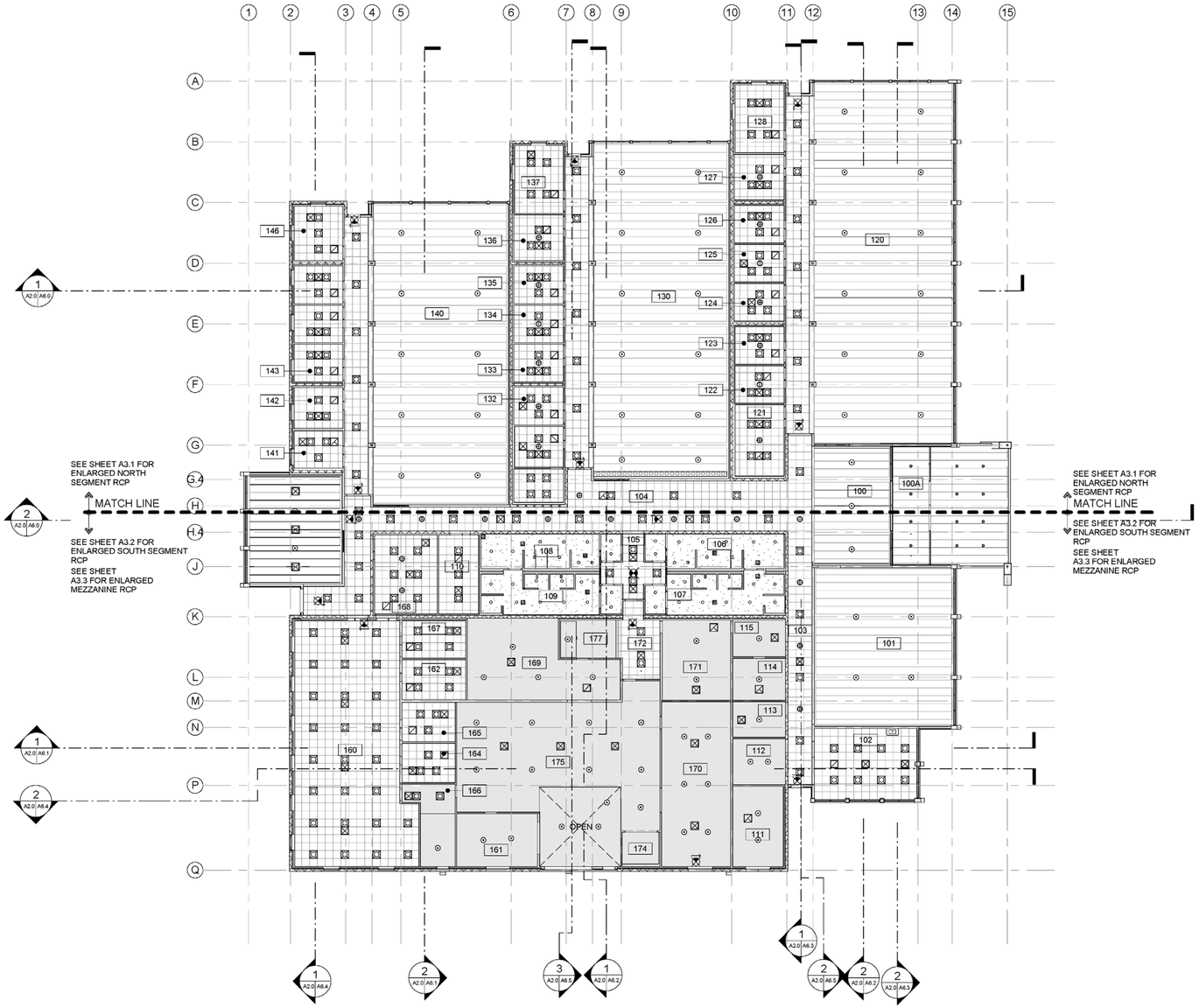

OVERALL REFLECTED CEILING PLAN

SCALE: 1/16" = 1'-0"

LEGEND:

BID OPTION 3 ALL LOCATIONS

- CURVED 2' X 6' SUSPENDED CEILING GRID WITH ACOUSTICAL PANELS
- 14" DIA TUBULAR DAYLIGHTING DEVICE WITH VARIABLE BAFFLE CONTROL & DIFFUSING LENS SEE DETAIL 1/A12.1
- 2' X 2' SUSPENDED CEILING GRID WITH ACOUSTICAL TILES & TRIGULAR EDGE. SEE DETAIL 7/A11.2
- SUSPENDED GYPSUM BOARD CEILING SEE DETAIL 1/ A11.2
- CEILING GRILLE - EXHAUST
- CEILING GRILLE -RETURN
- CEILING GRILLE -SUPPLY
- LED PENDANT MOUNT LOW BAY FIXTURE
- LED RECESSED 2' X 2' FIXTURE IN ACCESSIBLE CEILING, SEE DETAIL 7/A11.2
- EXPOSED CEILING
- X'-X" CEILING HEIGHT, ABOVE FINISH FLOOR (A.F.F.)
- RECESSED MOUNTED LED CEILING LIGHT FIXTURE, SEE DETAIL 3/A11.2
- EXIT SIGN, SEE DETAIL 8/ A11.2

LICENSED ARCHITECT
J. BRUCE CAMINO
C23740
Signature
10/31/11
RenewalDate
STATE OF CALIFORNIA

DEVELOPMENT ONE, INC.
1611 East Fourth Street, Suite 250
Santa Ana, California 92701
J. Bruce Camino, Architect, AIA, NCARB
(714) 689-0298
(714) 648-0197 FAX

DATE	SYM	REVISION	BY	A'PD

NATIONAL AERONAUTICS AND SPACE ADMINISTRATION
DRYDEN FLIGHT RESEARCH CENTER
EDWARDS, CA

DRAWING TITLE
OVERALL REFLECTED CEILING PLAN

PROJECT TITLE
8-18-11
FACILITIES SUPPORT CENTER
100% FINAL DESIGN SUBMITTAL

APPROVALS	DATE
Chief, Facilities Engineering Assist Mgmt. Office DAN CROWLEY	8-18-11
Project Requestor /Customer DAN CROWLEY	8-18-11
Facilities Project Manager GEMMA FLORES	8-18-11
Chief, Office of Protective Services JOHN ZELLMER	8-18-11
Chief - Safety, Health, and Environmental Office DAN MULLEN	8-18-11
DFRC Chief Information Officer KEN NORLIN	8-18-11

DATE STRTD	11/04/10	DATE PRNTD	05/23/11
DRAWN BY			EDM-1703
SCALE	AS NOTED	TRADE SH. No.	
FILE NAME		A3.0	SHEET No. 45 of 195

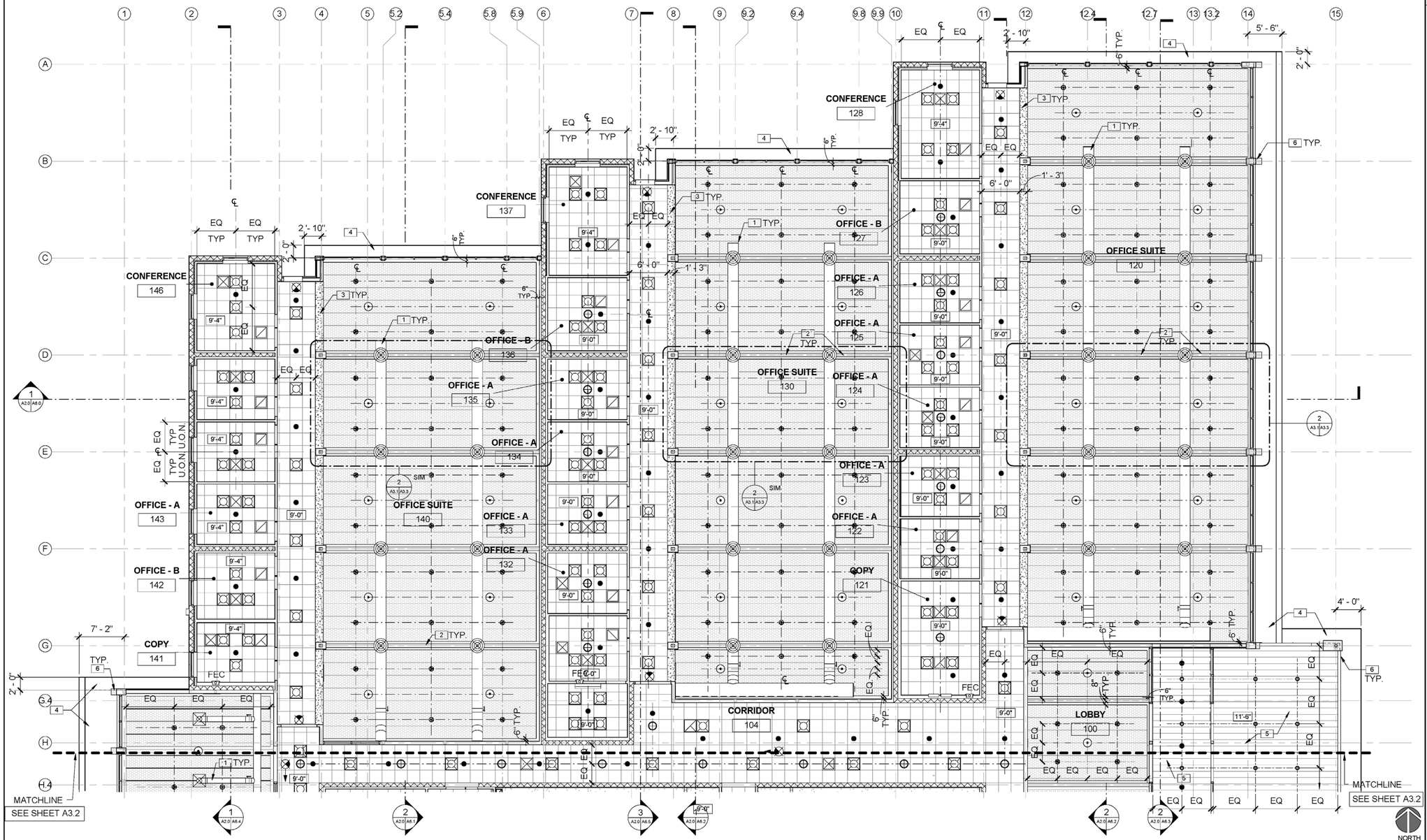

KEYNOTES:

1. EXPOSED HVAC DUCT AND DIFFUSERS, PAINTED, SEE MECHANICAL DRAWINGS
2. PAINTED STEEL TRUSS, SEE STRUCTURAL DRAWINGS
3. PAINTED GWB SOFFIT, SEE DETAIL 2 ON SHEET A12.0
4. METAL ROOF SOFFIT AT OVERHANG
5. METAL PANEL CEILING SYSTEM, SEE DETAIL 9/A11.2
6. TAPERED METAL COLUMN ENCLOSURE

NOTES:

1. FOR SUSPENDED CEILING DETAILS, SEE SHEET A11.2
2. PAINT ALL INTERIOR EXPOSED METAL COMPONENTS & ACCESSORIES, STRUCTURAL COMPONENTS (METAL DECKS, TRUSSES & FRAMINGS)
3. CEILING DIMENSIONS ARE TO FACE OF FINISH (F.O.F.), CENTERLINE OF LIGHT FIXTURE U.N.O.

LEGEND

- CURVED 2' X 6' SUSPENDED CEILING GRID WITH ACOUSTICAL PANELS
- 14" DIA TUBULAR DAYLIGHTING DEVICE WITH VARIABLE BAFFLE CONTROL & DIFFUSING LENS, SEE DETAIL 1/A12.1
- 2' X 2' SUSPENDED CEILING GRID WITH ACOUSTICAL TILES & TRIGULAR EDGE. SEE DETAIL 7/A11.2
- OPEN TO STRUCTURE ABOVE
- GYPSUM BOARD SOFFIT
- BID OPTION 3 ALL LOCATIONS
- CEILING GRILLE - EXHAUST
- CEILING GRILLE -RETURN
- CEILING GRILLE -SUPPLY
- AIR TERMINAL -SUPPLY
- LED PENDANT MOUNT LOW BAY FIXTURE
- LED RECESSED 2' X 2' FIXTURE IN ACCESSIBLE CEILING, SEE DETAIL 7/A11.2
- X'-X" CEILING HEIGHT, ABOVE FINISH FLOOR (A.F.F.)
- RECESSED MOUNTED LED CEILING LIGHT FIXTURE, SEE DETAIL 3/A11.2
- EXIT SIGN, SEE DETAIL 8/ A11.2
- CONCEALED FIRE SPRINKLER, SEE FIRE SPRINKLER DRAWINGS FOR ADDITIONAL INFORMATION
- UPRIGHT FIRE SPRINKLER, SEE FIRE SPRINKLER DRAWINGS FOR ADDITIONAL INFORMATION

NORTH SEGMENT REFLECTED CEILING PLAN

SCALE: 1/8" = 1'-0" (1 A3.0 A3.1)

LICENSED ARCHITECT J. BRUCE CAMINO C23740 Signature 10/31/11 RenewalDate STATE OF CALIFORNIA

DEVELOPMENT ONE, INC.
1611 East Fourth Street, Suite 250
Santa Ana, California 92701
J. Bruce Camino, Architect, AIA, NCARB
(714) 689-0298
(714) 648-0197 FAX

DATE	SYM	REVISION	BY	A'PD

NATIONAL AERONAUTICS AND SPACE ADMINISTRATION
DRYDEN FLIGHT RESEARCH CENTER
EDWARDS, CA

DRAWING TITLE
NORTH SEGMENT REFLECTED CEILING PLAN

PROJECT TITLE
8-18-11
FACILITIES SUPPORT CENTER
100% FINAL DESIGN SUBMITTAL

APPROVALS	DATE
Chief, Facilities Engineering Area West Office DAN CROWLEY	8-18-11
Project Requestor /Customer DAN CROWLEY	8-18-11
Facilities Project Manager GEMMA FLORES	8-18-11
Chief, Office of Protective Services JOHN ZELLMER	8-18-11
Chief - Safety, Health, and Environmental Office DAN MULLEN	8-18-11
DFRC Chief Information Officer KEN NORLIN	8-18-11

DATE STRTD	11/04/10	DATE PRNTD	05/23/11
DRAWN BY			EDM-1703
SCALE	AS NOTED	TRADE SH. No.	
FILE NAME		A3.1	SHEET No. 46 of 195

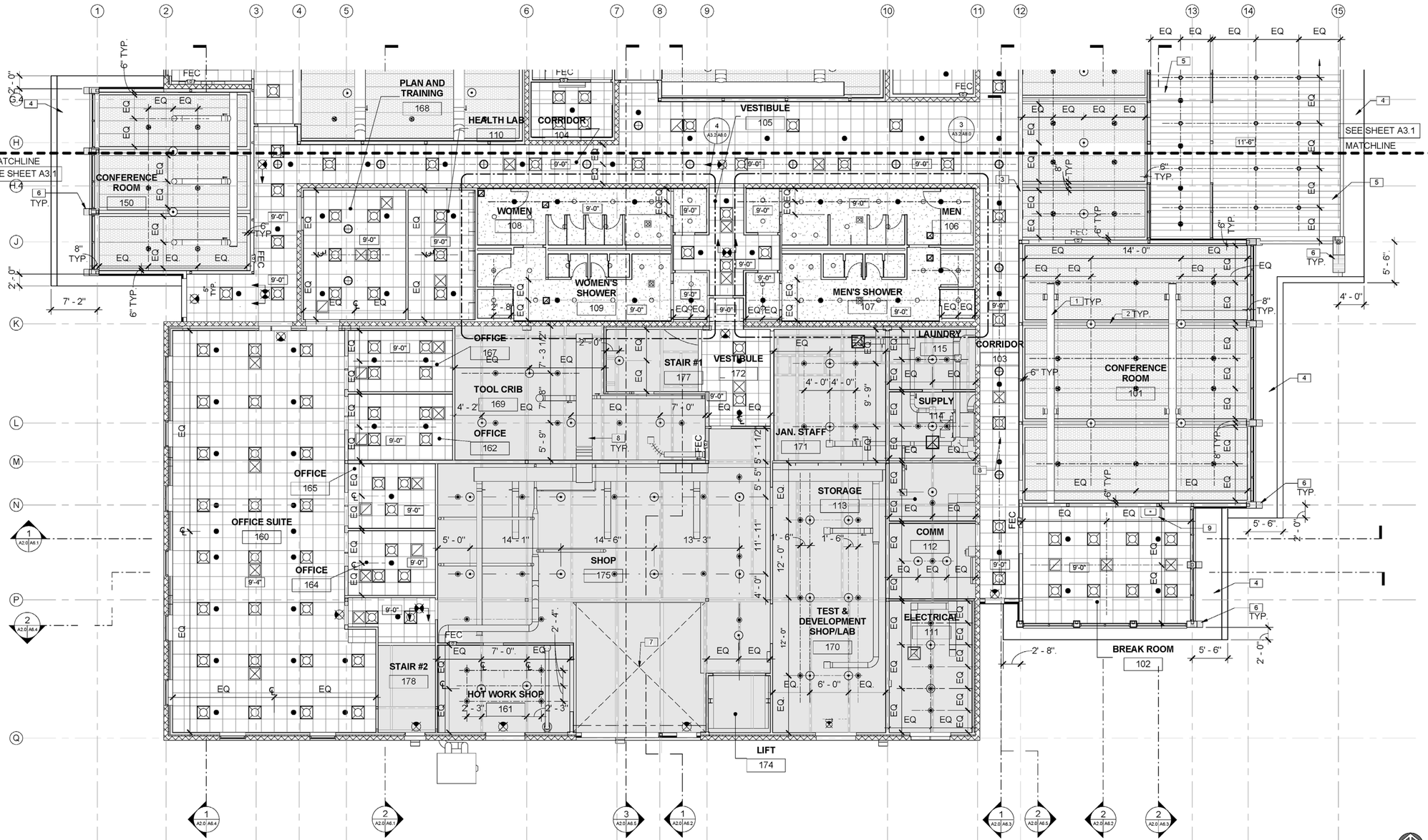

KEYNOTES:

1. EXPOSED HVAC DUCT AND DIFFUSERS, PAINTED, SEE MECHANICAL DRAWINGS
2. PAINTED STEEL TRUSS, SEE STRUCTURAL DRAWINGS
3. PAINTED GWB SOFFIT, SEE DETAIL 2 ON SHEET A12.0
4. METAL ROOF SOFFIT AT OVERHANG
5. METAL PANEL CEILING SYSTEM, SEE DETAIL 9/A11.2
6. TAPERED METAL COLUMN ENCLOSURE
7. OPEN TO ABOVE
8. MECHANICAL EQUIPMENT, SEE MECHANICAL DRAWINGS
9. STAINLESS STEEL KITCHEN EXHAUST HOOD, SEE MECHANICAL DRAWINGS

NOTES:

1. FOR SUSPENDED CEILING DETAILS, SEE SHEET A11.2
2. PAINT ALL INTERIOR EXPOSED METAL COMPONENTS & ACCESSORIES, STRUCTURAL COMPONENTS (METAL DECKS, TRUSSES & FRAMINGS)
3. CEILING DIMENSIONS ARE TO FACE OF FINISH (F.O.F.), CENTERLINE OF LIGHT FIXTURE U.N.O.

LEGEND:

- CURVED 2' X 6' SUSPENDED CEILING GRID WITH ACOUSTICAL PANELS — BID OPTION 3, ALL LOCATIONS
- 14" DIA TUBULAR DAYLIGHTING DEVICE WITH VARIABLE BAFFLE CONTROL & DIFFUSING LENS, SEE DETAIL 1/A12.1
- 2' X 2' SUSPENDED CEILING GRID WITH ACOUSTICAL TILES & TRIGULAR EDGE. SEE DETAIL 7/A11.2
- OPEN TO STRUCTURE ABOVE
- GYPSUM BOARD SOFFIT
- CEILING GRILLE - EXHAUST
- CEILING GRILLE -RETURN
- CEILING GRILLE -SUPPLY
- AIR TERMINAL -SUPPLY
- LED PENDANT MOUNT LOW BAY FIXTURE
- LED RECESSED 2' X 2' FIXTURE IN ACCESSIBLE CEILING, SEE DETAIL 7/A11.2
- X'-X" CEILING HEIGHT, ABOVE FINISH FLOOR (A.F.F.)
- RECESSED MOUNTED LED CEILING LIGHT FIXTURE, SEE DETAIL 3/A11.2
- EXIT SIGN, SEE DETAIL 8/ A11.2
- CONCEALED FIRE SPRINKLER, SEE FIRE SPRINKLER DRAWINGS FOR ADDITIONAL INFORMATION
- UPRIGHT FIRE SPRINKLER, SEE FIRE SPRINKLER DRAWINGS FOR ADDITIONAL INFORMATION

SOUTH SEGMENT REFLECTED CEILING PLAN

SCALE: 1/8" = 1'-0" (1 A3.0 / A3.2)

LICENSED ARCHITECT — J. BRUCE CAMINO — C23740 — Signature — 10/31/11 — RenewalDate — STATE OF CALIFORNIA

DEVELOPMENT ONE, INC.
1611 East Fourth Street, Suite 250
Santa Ana, California 92701
J. Bruce Camino, Architect, AIA, NCARB
(714) 689-0298
(714) 648-0197 FAX

DATE	SYM	REVISION	BY	A'PD

NATIONAL AERONAUTICS AND SPACE ADMINISTRATION
DRYDEN FLIGHT RESEARCH CENTER
EDWARDS, CA

DRAWING TITLE: SOUTH SEGMENT REFLECTED CEILING PLAN

PROJECT TITLE: 8-18-11 FACILITIES SUPPORT CENTER 100% FINAL DESIGN SUBMITTAL

APPROVALS		DATE
Chief, Facilities Engineering and Asset Mgmt Office		
DAN CROWLEY		8-18-11
Project Requestor /Customer		
DAN CROWLEY		8-18-11
Facilities Project Manager		
GEMMA FLORES		8-18-11
Chief, Office of Protective Services		
JOHN ZELLMER		8-18-11
Chief - Safety, Health, and Environmental Office		
DAN MULLEN		8-18-11
DFRC Chief Information Officer		
KEN NORLIN		8-18-11

DATE STRTD	11/04/10	DATE PRINTD	05/23/11
DRAWN BY			EDM-1703
SCALE	AS NOTED	TRADE SH. No.	
FILE NAME	A3.2	SHEET No. 47 of 195	

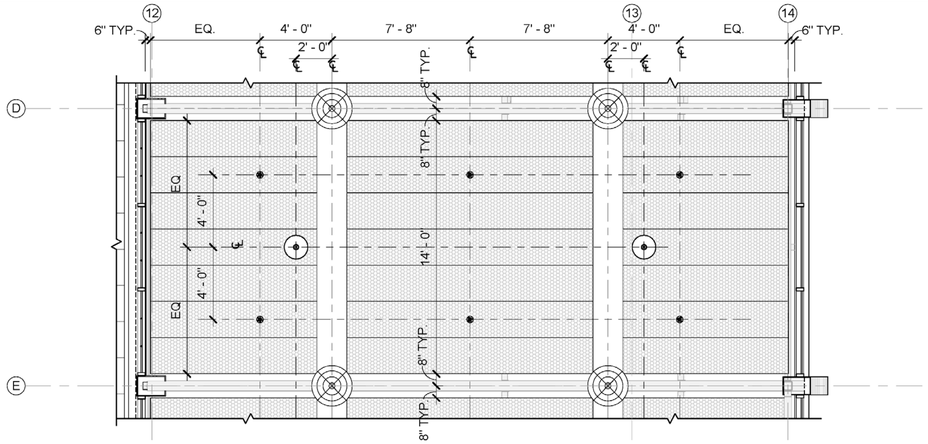

TYPICAL RCP LAYOUT AT CURVED CEILING

SCALE: 1/4" = 1'-0" | 2 | A3.1 | A3.2

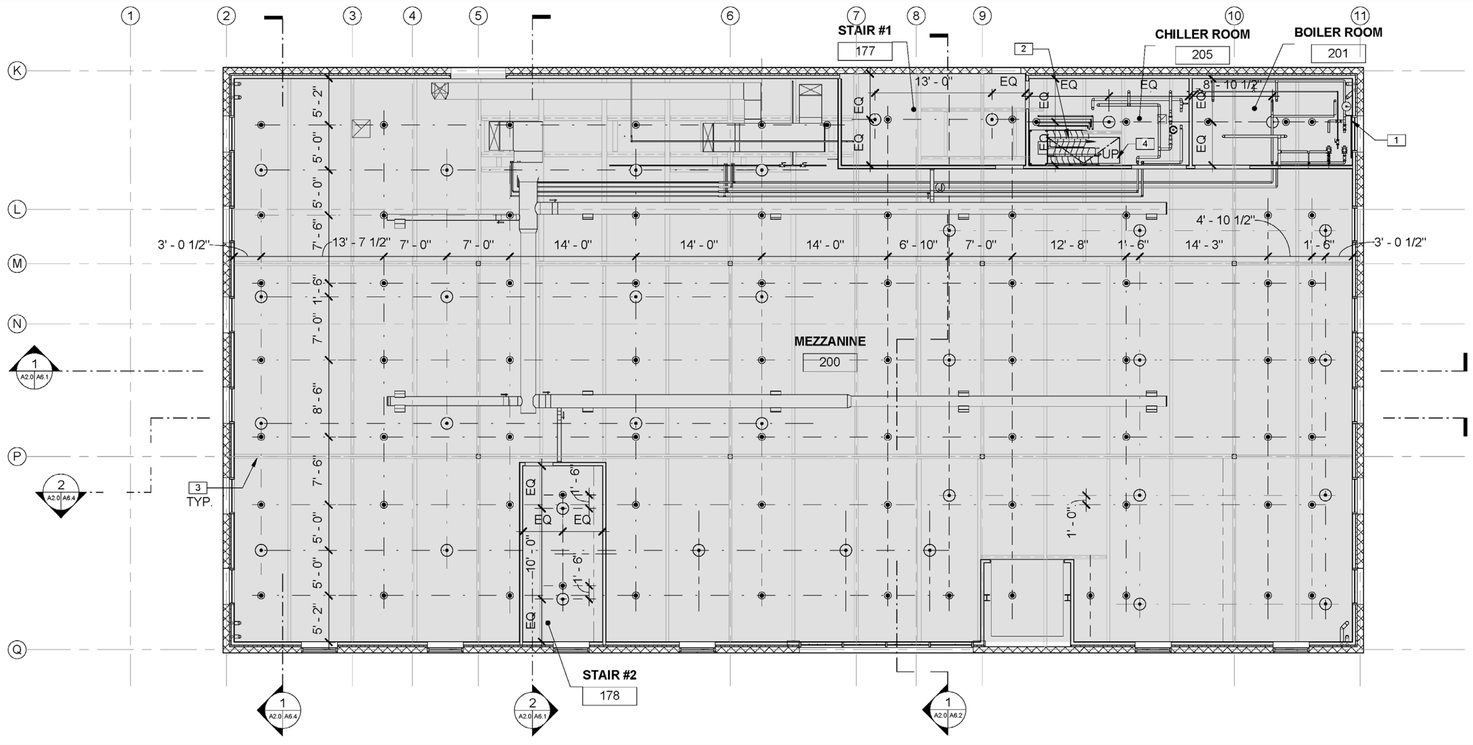

NORTH

KEYNOTES:

1. SEE MECHANICAL DRAWINGS FOR EQUIPMENT LAYOUT AND INFORMATION
2. ALTERNATE TREAD STAIR ROOF HATCH WITH LANDING
3. STEEL BEAM FRAMING- SEE STRUCTURAL DRAWING
4. 8' X 6' ROOF ACCESS HATCH, SEE DETAIL 1/A11.1 AND ROOF PLAN FOR LOCATION

NOTES:

1. PAINT ALL INTERIOR EXPOSED METAL COMPONENTS & ACCESSORIES, STRUCTURAL COMPONENTS (METAL DECKS, TRUSSES & FRAMINGS)
2. CEILING DIMENSIONS ARE TO FACE OF FINISH (F.O.F.), CENTERLINE OF LIGHT FIXTURE U.N.O.

LEGEND:

- CURVED 2' X 6' SUSPENDED CEILING GRID WITH ACOUSTICAL PANELS — BID OPTION 3, ALL LOCATIONS
- 14" DIA TUBULAR DAYLIGHTING DEVICE WITH VARIABLE BAFFLE CONTROL & DIFFUSING LENS, SEE DETAIL 1/A12.1
- 2' X 2' SUSPENDED CEILING GRID WITH ACOUSTICAL TILES & TRIGULAR EDGE. SEE DETAIL 7/A11.2
- OPEN TO STRUCTURE ABOVE
- GYPSUM BOARD SOFFIT
- CEILING GRILLE - EXHAUST
- CEILING GRILLE -RETURN
- CEILING GRILLE -SUPPLY
- AIR TERMINAL -SUPPLY
- LED PENDANT MOUNT LOW BAY FIXTURE
- LED RECESSED 2' X 2' FIXTURE IN ACCESSIBLE CEILING, SEE DETAIL 7/A11.2
- X'-X" CEILING HEIGHT, ABOVE FINISH FLOOR (A.F.F.)
- RECESSED MOUNTED LED CEILING LIGHT FIXTURE, SEE DETAIL 3/A11.2
- EXIT SIGN, SEE DETAIL 8/ A11.2
- CONCEALED FIRE SPRINKLER, SEE FIRE SPRINKLER DRAWINGS FOR ADDITIONAL INFORMATION
- UPRIGHT FIRE SPRINKLER, SEE FIRE SPRINKLER DRAWINGS FOR ADDITIONAL INFORMATION

MEZZANINE RCP

SCALE: 1/8" = 1'-0"

LICENSED ARCHITECT J. BRUCE CAMINO C23740 Signature 10/31/11 Renewal Date STATE OF CALIFORNIA

DEVELOPMENT ONE, INC.
1611 East Fourth Street, Suite 250
Santa Ana, California 92701
J. Bruce Camino, Architect, AIA, NCARB
(714) 689-0298
(714) 648-0197 FAX

DATE	SYM	REVISION	BY	A'PD

NATIONAL AERONAUTICS AND SPACE ADMINISTRATION
DRYDEN FLIGHT RESEARCH CENTER
EDWARDS, CA

DRAWING TITLE
MEZZANINE RCP & TYPICAL CURVED CEILING LAYOUT

PROJECT TITLE
8-18-11
FACILITIES SUPPORT CENTER
100% FINAL DESIGN SUBMITTAL

APPROVALS		DATE
Chief, Facilities Engineering and Asset Mgmt Office		
DAN CROWLEY		8-18-11
Project Requestor /Customer		
DAN CROWLEY		8-18-11
Facilities Project Manager		
GEMMA FLORES		8-18-11
Chief, Office of Protective Services		
JOHN ZELLMER		8-18-11
Chief - Safety, Health, and Environmental Office		
DAN MULLEN		8-18-11
DFRC Chief Information Officer		
KEN NORLIN		8-18-11

DATE STRTD	11/04/10	DATE PRNTD	05/23/11
DRAWN BY			EDM-1703
SCALE	AS NOTED	TRADE SH. No	
FILE NAME		A3.3	SHEET No. 48 of 196

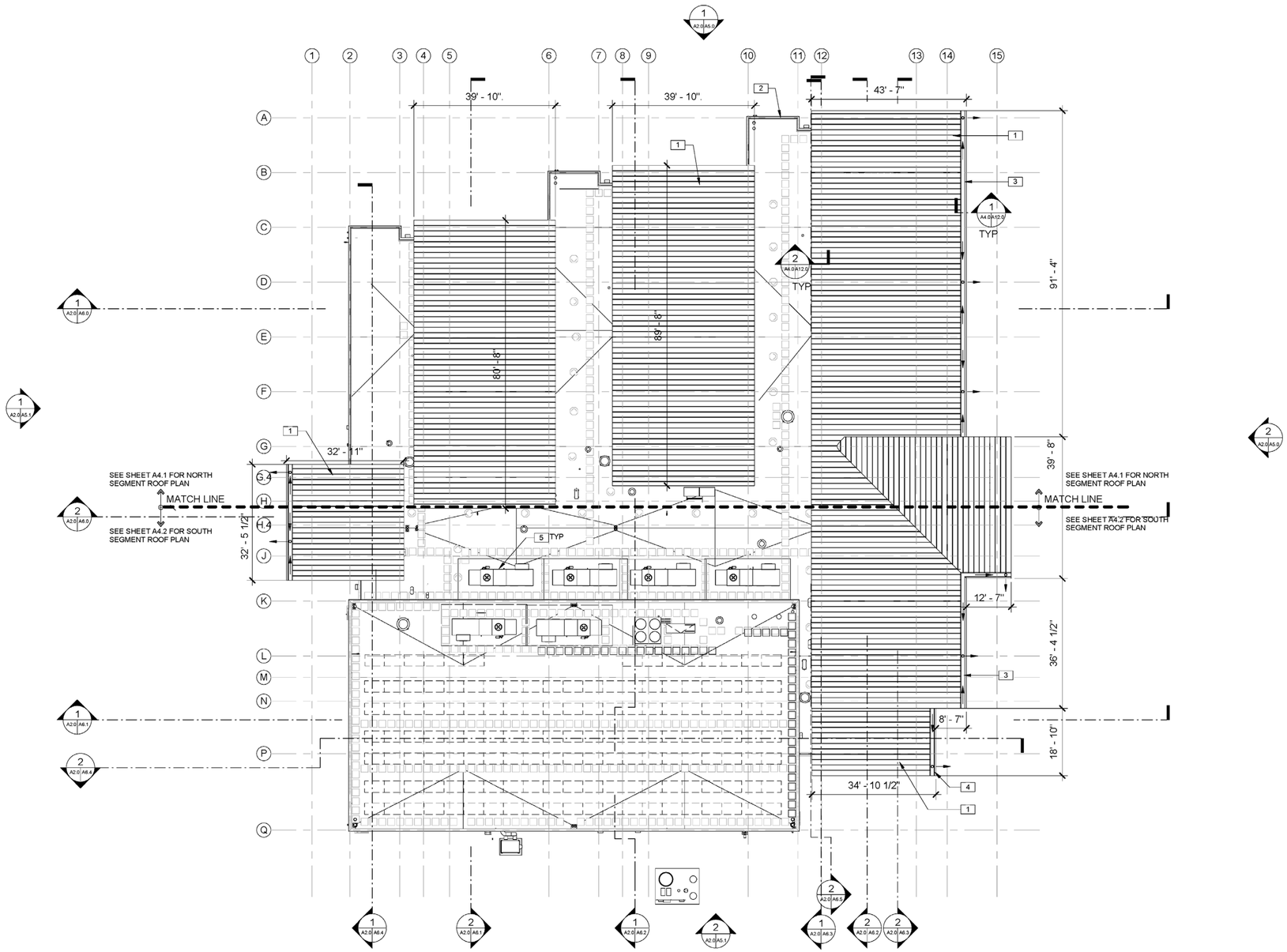

KEYNOTES:

1. STANDING SEAM METAL ROOF - SEE DETAIL 3/A11.1
2. STAINLESS STEEL CABLE RAILING SYSTEM, 20" HIGH FROM TOP OF PARAPET, SEE DETAIL 9/A12.0
3. ROOF GUTTER, SEE DETAIL 1/A12.0
4. ROOF DRAIN, SEE DETAIL 3/A11.0
5. MECHANICAL EQUIPMENT, SEE MECHANICAL DRAWINGS

ROOF PLAN

SCALE: 1/16" = 1'-0"

LICENSED ARCHITECT J. BRUCE CAMINO C23740 Signature 10/31/11 RenewalDate STATE OF CALIFORNIA

DEVELOPMENT ONE, INC.
1611 East Fourth Street, Suite 250
Santa Ana, California 92701
J. Bruce Camino, Architect, AIA, NCARB
(714) 689-0296
(714) 648-0197 FAX

DATE	SYM	REVISION	BY	A'PD

NATIONAL AERONAUTICS AND SPACE ADMINISTRATION

DRYDEN FLIGHT RESEARCH CENTER
EDWARDS, CA

DRAWING TITLE: ROOF PLAN

PROJECT TITLE: 8-18-11
FACILITIES SUPPORT CENTER
100% FINAL DESIGN SUBMITTAL

APPROVALS	DATE
Chief, Facilities Engineering and Asset Management Office DAN CROWLEY	8-18-11
Project Requestor /Customer DAN CROWLEY	8-18-11
Facilities Project Manager GEMMA FLORES	8-18-11
Chief, Office of Protective Services JOHN ZELLMER	8-18-11
Chief - Safety, Health, and Environmental Office DAN MULLEN	8-18-11
DFRC Chief Information Officer KEN NORLIN	8-18-11

DATE STRTD	11/04/10	DATE PRNTD	05/23/11
DRAWN BY			EDM-1703
SCALE	AS NOTED	TRADE SH. No.	
FILE NAME	A4.0	SHEET No. 49 of 195	

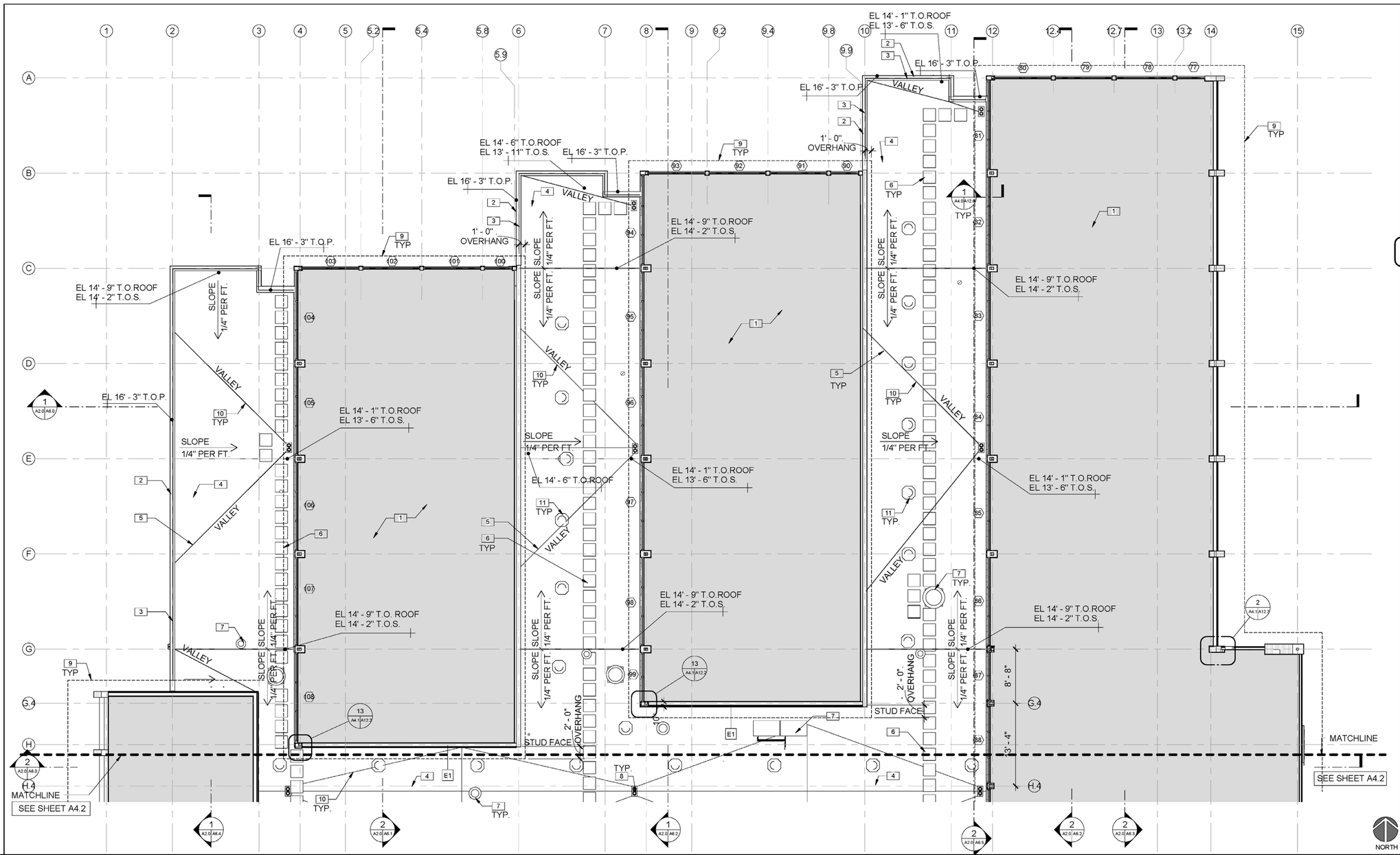

KEYNOTES:

1. ENCLOSED BUILDING AREA UNDER BARREL ROOF, SEE PLAN A2.0
2. METAL COPING AT PARAPET, SEE DETAIL 8/A12.0
3. STAINLESS STEEL CABLE RAILING SYSTEM, 20" HIGH FROM TOP OF PARAPET, SEE DETAIL 9/A12.0
4. TPO MEMBRANE ROOF OVER RIGID INSULATION, SEE DETAIL 4/A11.1
5. ROOF CRICKET, SEE DETAIL 7/A11.1
6. ROOF WALKING PADS
7. MECHANICAL EQUIPMENT, SEE MECHANICAL DRAWINGS
8. AREA ROOF DRAIN W/ OVERFLOW DRAIN INLET, SEE DETAIL 3/A11.0
9. OUTLINE OF STANDING SEAM METAL ROOF ABOVE, SEE A4.0 FOR LOCATIONS
10. ROOF CRICKET BUILT-UP TAPERED INSULATION
11. TUBULAR DAYLIGHTING DEVICE, SEE DETAIL 1/A12.1

BID OPTION 3
ALL LOCATIONS

ROOF PLAN AT LOW ROOFS

SCALE: 1/8" = 1'-0"

LICENSED ARCHITECT
J. BRUCE CAMINO
C23740
Signature
10/31/11
Renewal Date
STATE OF CALIFORNIA

DEVELOPMENT ONE, INC.
1611 East Fourth Street, Suite 250
Santa Ana, California 92701
J. Bruce Camino, Architect, AIA, NCARB
(714) 689-0298
(714) 648-0197 FAX

DATE	SYM	REVISION	BY	A'PD

NATIONAL AERONAUTICS AND SPACE ADMINISTRATION
DRYDEN FLIGHT RESEARCH CENTER
EDWARDS, CA

DRAWING TITLE
NORTH SEGMENT ROOF PLAN AT LOW ROOFS

PROJECT TITLE
8-18-11
FACILITIES SUPPORT CENTER
100% FINAL DESIGN SUBMITTAL

APPROVALS	DATE
Chief, Facilities Engineering and Asset Mgmt Office DAN CROWLEY	8-18-11
Project Requestor /Customer DAN CROWLEY	8-18-11
Facilities Project Manager GEMMA FLORES	8-18-11
Chief, Office of Protective Services JOHN ZELLMER	8-18-11
Chief - Safety, Health, and Environmental Office DAN MULLEN	8-18-11
DFRC Chief Information Officer KEN NORLIN	8-18-11

DATE STRTD	11/04/10	DATE PRINTD	05/23/11
DRAWN BY			EDM-1703
SCALE	AS NOTED	TRADE SH. No.	
FILE NAME		A4.1	SHEET No. 50 of 195