CAGE	DWG. NO.	SH	REV.
25305	1252520	1	-

REVISION HISTORY

ZONE	REV	DESCRIPTION	DRAWN	CHECKED	LEAD ENGR	BRANCH	DATE

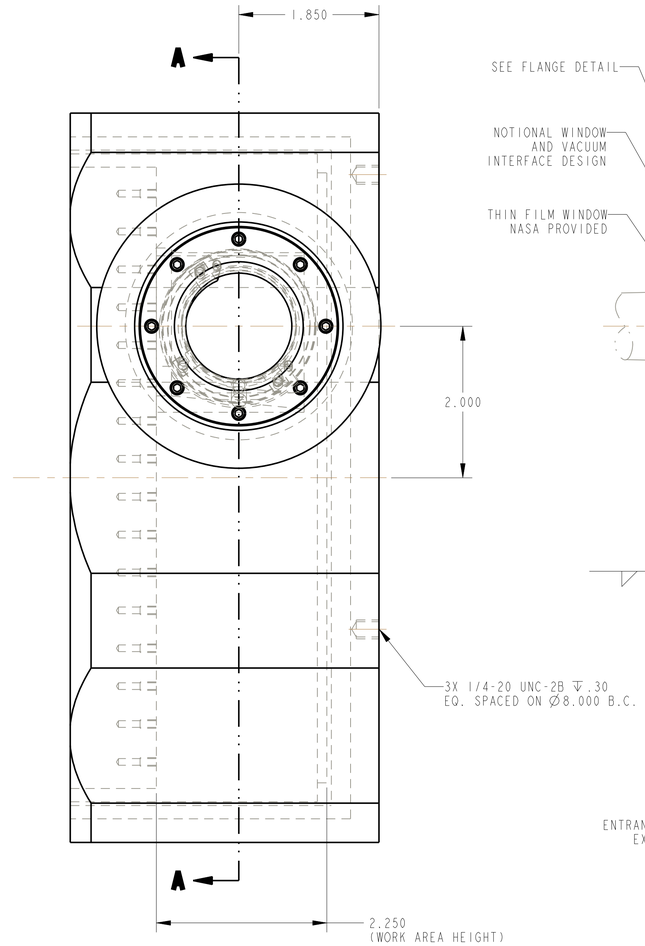

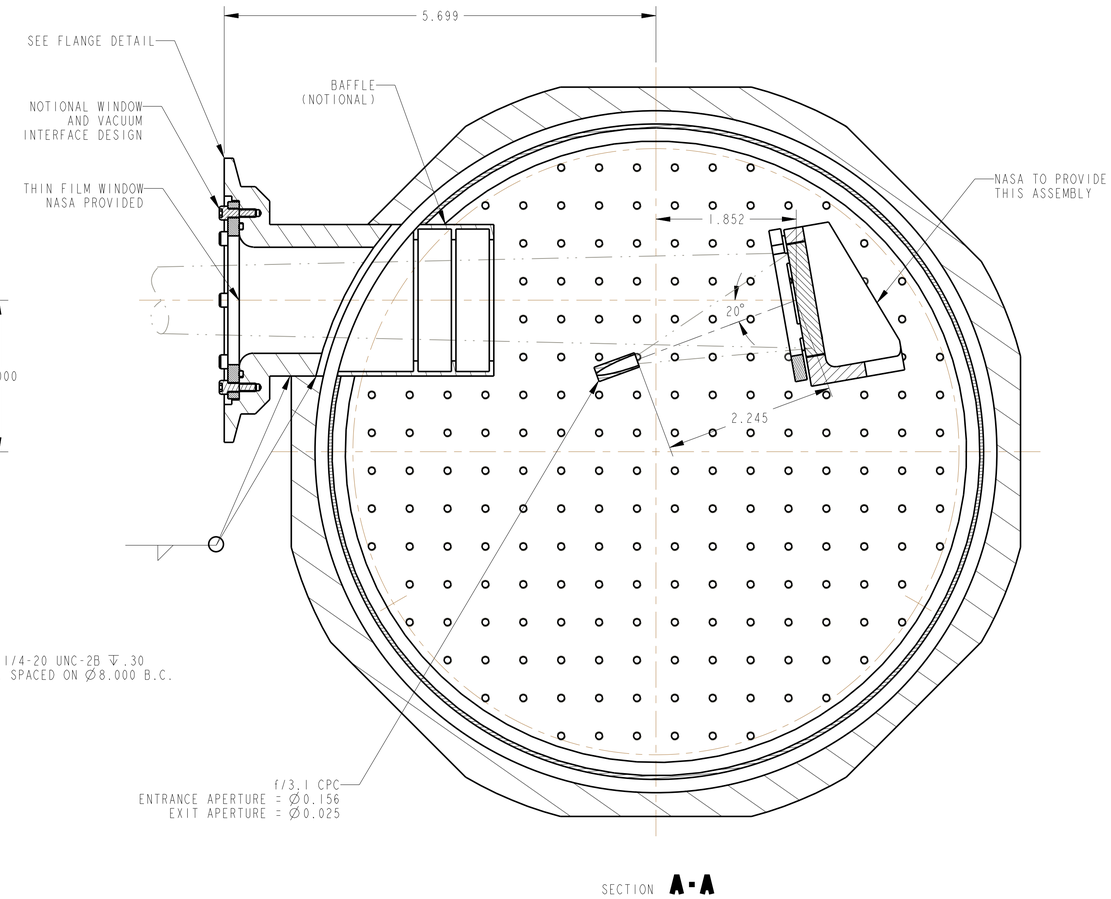

SECTION **A-A**

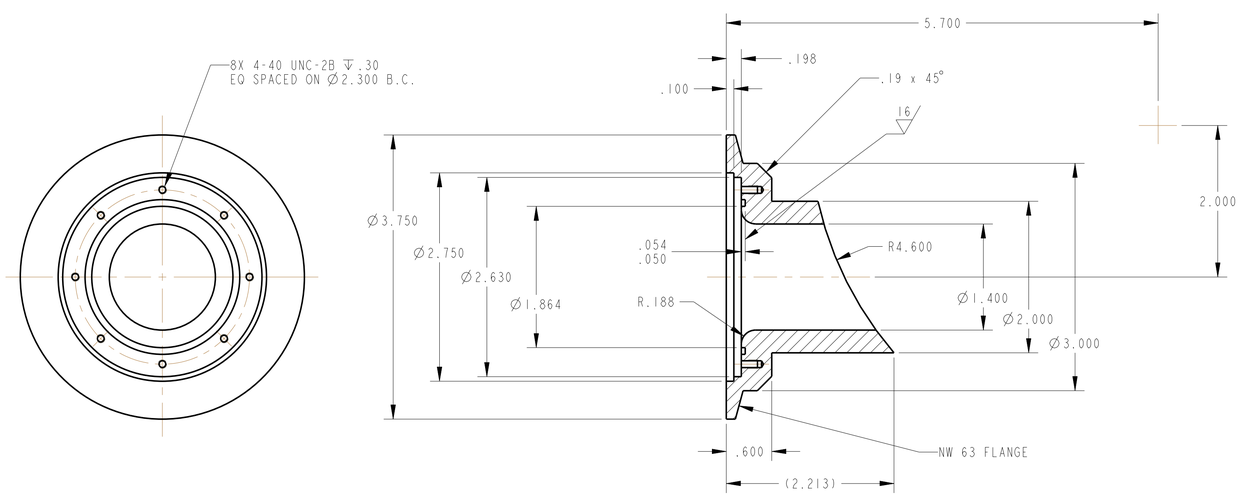

FLANGE DETAIL

QTY REQD	CAGE CODE	PART OR IDENTIFYING NO.	NOMENCLATURE OR DESCRIPTION	MATERIAL SPECIFICATION	ITEM NO.
		-1	MODIFIED DEWAR	----------	1

PARTS LIST

PART DASH NO.	NEXT	FINAL	NEXT ASSY	USED ON
-1				

QTY REQD PER ASSY	APPLICATION

UNLESS OTHERWISE SPECIFIED DIMENSIONS ARE IN INCHES.
TOLERANCES
DECIMALS .XX ± .03 .XXX ± .010
ANGULAR .X ± .5°
DO NOT SCALE DRAWING

TREATMENT

FINISH

SIMILAR TO | SPECIAL MARKING SYM

CONTRACT NO.

APPROVALS	DATE
DRAWN T.SHEKOSKI	06-Jun-11
CHECKED	
DESIGNER T.SHEKOSKI	06-Jun-11
LEAD ENGR	
BRANCH	

NATIONAL AERONAUTICS & SPACE ADMINISTRATION
LANGLEY RESEARCH CENTER
HAMPTON, VA 23681-2199

TITLE

CLARREO BOLOMETER DEWAR

SIZE	CAGE CODE	DWG. NO.	REV.
D	25305	1252520	-

SCALE 1/1 | CALC. WT. | ACT. WT. | SHEET 1 OF 2

CAGE	DWG. NO.	SH	REV.
25305	1252520	2	-

REVISION HISTORY

ZONE	REV	DESCRIPTION	DRAWN	CHECKED	LEAD ENGR	BRANCH	DATE

NASA
LANGLEY RESEARCH CENTER
HAMPTON, VA 23681-2199

DRAWN 0	SIZE D	CAGE CODE 25305	DWG. NO. 1252520	REV. -
CHECKED	SCALE 1/1			SHEET 2 OF 2