REVISION HISTORY		
ZONE	REV	DESCRIPTION

1. MATERIAL: ALUMINUM 7075-T6, PER ASTM-B211.
2. 64 Ra ALL OVER UNLESS OTHERWISE NOTED.
3. BREAK ALL EDGES .01-.02 UNLESS OTHERWISE NOTED.
4. ALL CORNER FILLETS TO BE .015-.020 UNLESS OTHERWISE NOTED.
5. UNLESS OTHERWISE NOTED, ALL FACES AND DIAMETERS SHALL BE ⌭ .002 A B
6. CLEAR ANODIZE PER MIL-A-8625, TYPE 2, CLASS 1.
7. ELECTROCHEMICAL ETCH DRAWING PART NUMBER 060928MRA977, ON SPECIFIED SURFACE, PER SAE-AS478, METHOD 7A, OR LASER ETCH DRAWING PART NUMBER 060928MRA977, ON SPECIFIED SURFACE, PER SAE-AS478, METHOD 15B1. (SHALLOW ENGRAVE 0.0001-0.0006 DEEP). (ZONE F5)
8. BEFORE SHIPPING, PROTECT WITH NEW AND CLEAN POLYETHYLENE BAG FOR SMALL ITEMS, OR 4 MIL THICK MINIMUM POLYETHYLENE SHEET SEALED WITH PACKAGING TAPE. MARK WITH DRAWING PART NUMBER 060928MRA977, ON TAG ATTACHED TO BAG.

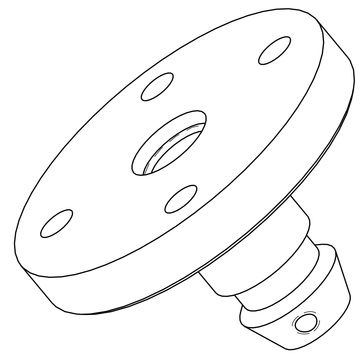

ISO VIEW

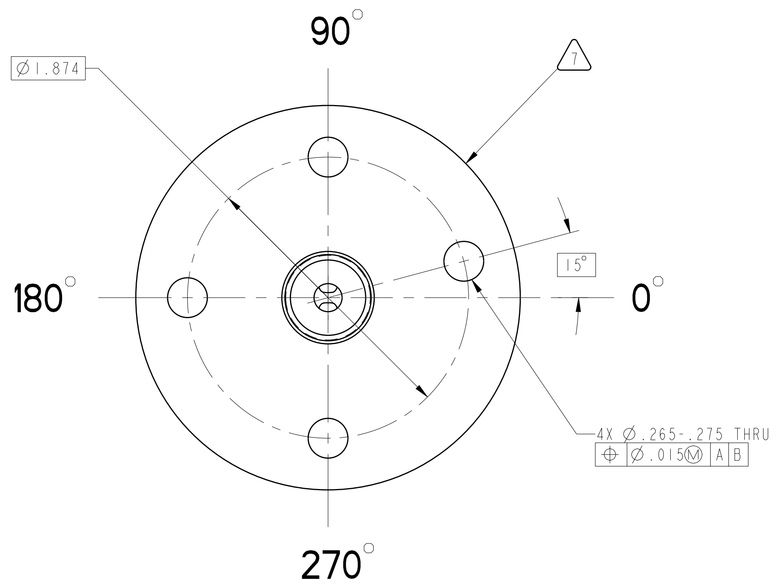

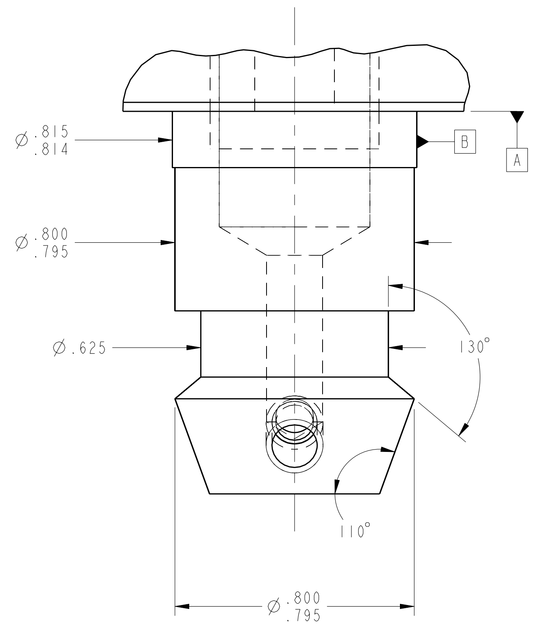

DETAIL **B**
SCALE: 4/1

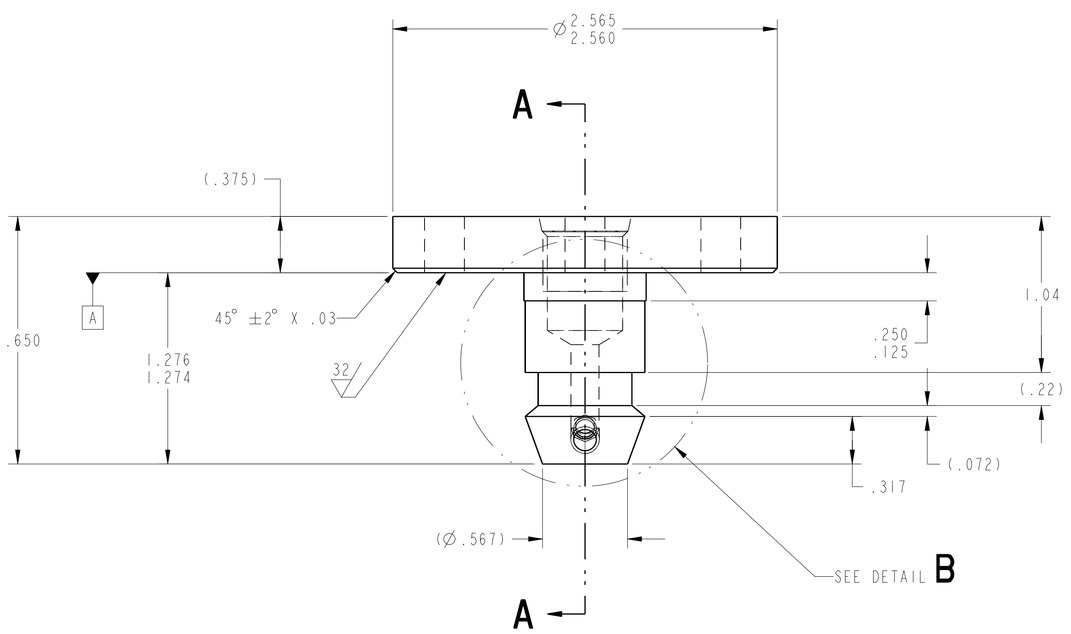

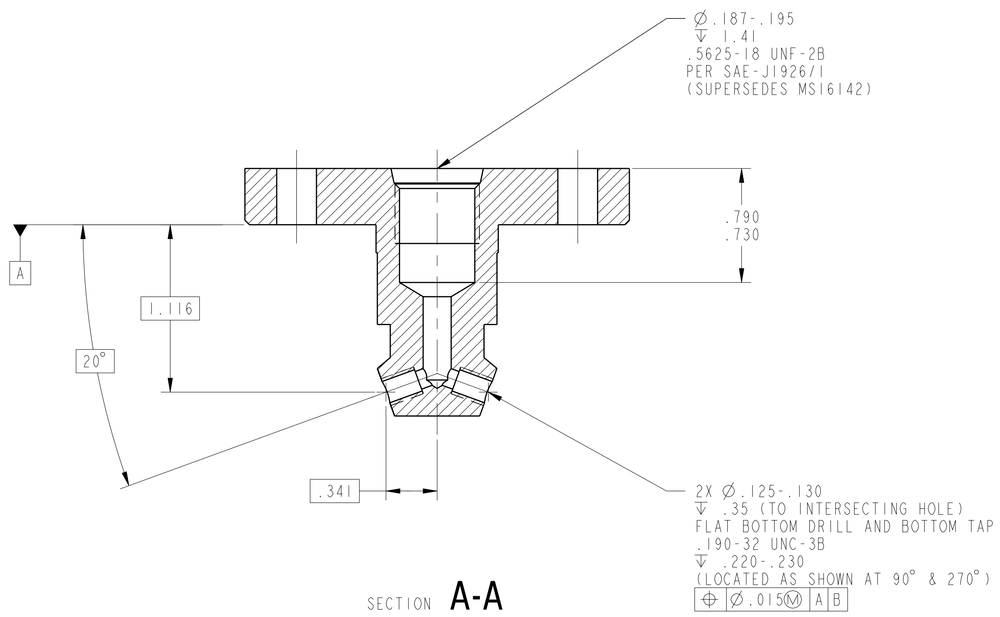

SECTION **A-A**

		UNLESS OTHERWISE SPECIFIED DIMENSIONS ARE IN INCHES X.X ± .03 X.XXX ± .005 X.XX ± .01 ANGLE ± .5° MACHINED SURFACES 63/ INTERPRET DIMENSIONS AND TOLERANCES PER ASME Y14.5M - 1994	DATE 2011/05/17	NATIONAL AERONAUTICS AND SPACE ADMINISTRATION JOHN H. GLENN RESEARCH CENTER LEWIS FIELD, CLEVELAND, OHIO
			MODELER DEZ / D. MIKITKA	
			PRIMARY CONTACT DER / M. STEVENS	TITLE BODY, OIL-JET, OUTPUT, SHAFT BEARINGS
			STATE Released	
		THIRD ANGLE PROJECTION	WINDCHILL PRODUCT	
060928MRA907	2-SPEED TRANS.		060928_Variable_Speed_Transmissio	SIZE E / CAGE CODE 1QFP5 / DWG NO 060928MRA977 / REV -
NEXT ASSY	USED ON		MODEL	
APPLICATION			A977_BODY_INJECTOR_OUTPUT	SCALE: 2/1 / SHEET 1 OF 1

DWG NO 060928MRA977 SH 1 REV -

NAME:BERTANGR OBJECT:A977_BODY_INJECTOR_OUTPUT DATE:17-Apr-11 15:59:42