REVISION HISTORY		
ZONE	REV	DESCRIPTION

1. MATERIAL: 4340 STEEL SAE-AMS-6415S
2. 64 Ra ALL OVER UNLESS OTHERWISE SPECIFIED.
3. PRIOR TO FABRICATION, MATERIAL MUST PASS ULTRASONIC INSPECTION PER SAE-AMS-2154, TYPE I (IMMERSION), CLASS A.
4. HEAT TREAT: Rc 35-45 BEFORE FINISH MACHINING.
5. BREAK ALL EDGES .01-.02 UNLESS OTHERWISE SPECIFIED.
6. ALL CORNER FILLETS TO BE R.015-.020 UNLESS OTHERWISE SPECIFIED.
7. UNLESS OTHERWISE SPECIFIED ALL FACES AND DIAMETERS SHALL BE ⌖ .002 A B
8. FINISHED PART MUST PASS DYE PENETRANT INSPECTION PER ASTM-E1417 TYPE I, METHOD A, SENSITIVITY LEVEL 2. ACCEPTANCE PER MIL-STD-1907, GRADE C. REMOVAL OF DEFECTS BY GRINDING OR POLISHING SHALL BE WITHIN DIMENSIONAL TOLERANCES.
9. ELECTROCHEMICAL ETCH DRAWING PART NUMBER 060928MRA847 ON SPECIFIED SURFACE, PER SAE-AS478, METHOD 7A, OR OPTIONAL, LASER ETCH DRAWING PART NUMBER 060928MRA847 ON SPECIFIED SURFACE, PER SAE-AS478, METHOD 15B1. (SHALLOW ENGRAVE 0.0001-0.0006 DEEP). (ZONE E2)
10. ELECTROCHEMICAL ETCH THE FOLLOWING TEXT: "CAUTION, AFT LOOKING FORWARD" ON SPECIFIED SURFACE, PER SAE-AS478, METHOD 7A, OR OPTIONAL, LASER ETCH THE FOLLOWING TEXT: "CAUTION, AFT LOOKING FORWARD" ON SPECIFIED SURFACE, PER SAE-AS478, METHOD 15B1. (SHALLOW ENGRAVE 0.0001-0.0006 DEEP). (ZONE D3)
11. BEFORE SHIPPING, PROTECT WITH CONTAMINATION BARRIER SUCH AS WD-40, OR EQUIVALENT. USE NEW AND CLEAN POLYETHYLENE BAG FOR SMALL ITEMS, OR, 4 MIL THICK MINIMUM POLYETHYLENE SHEET SEALED WITH PACKAGING TAPE. MARK WITH DRAWING PART NUMBER 060928MRA847 ON TAG ATTACHED TO BAG.

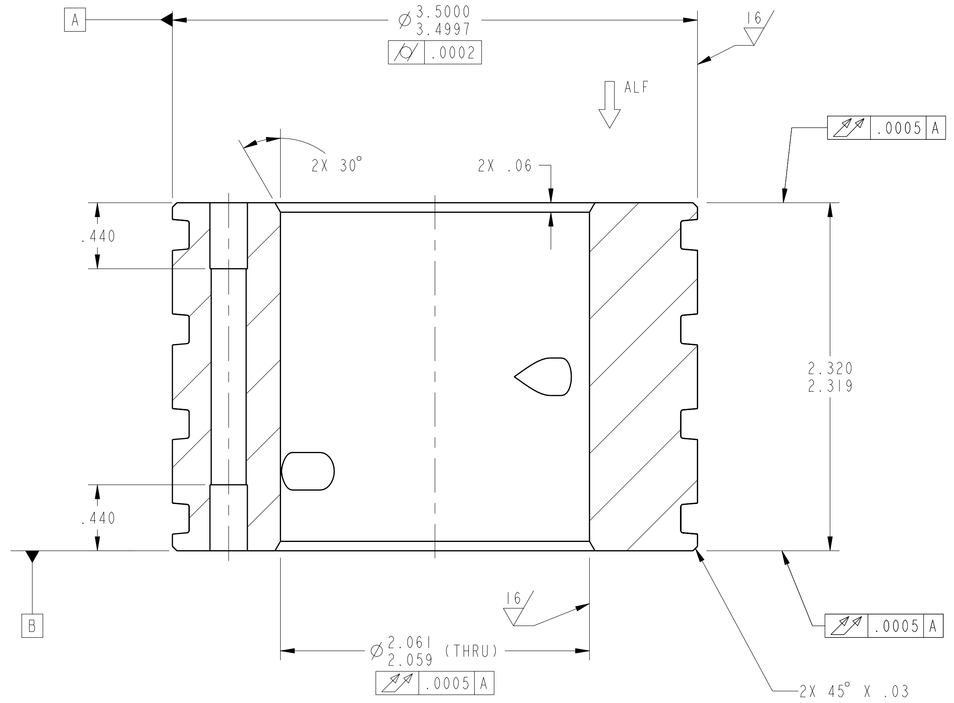

SECTION **A-A**

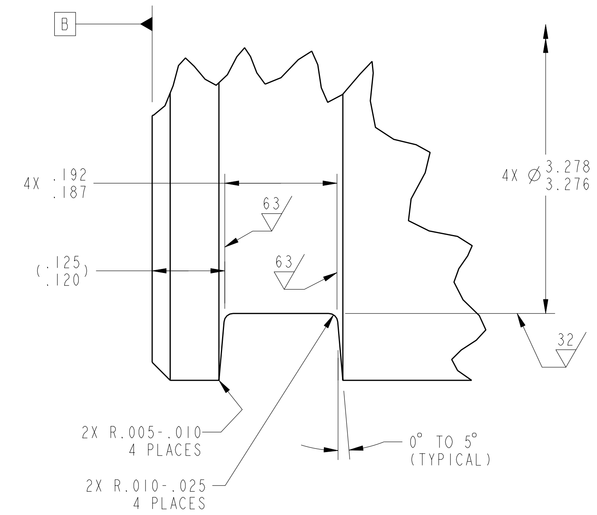

DETAIL **D**
SCALE 8/1
(#2-236 O-RING GROOVE DETAIL)
(REF: PARKER O-RING HANDBOOK)

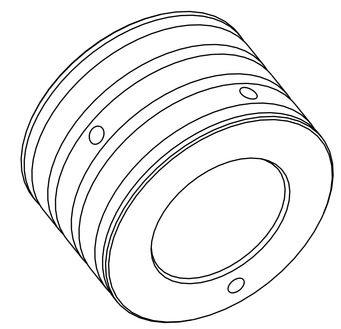

ISO
SCALE 1/1

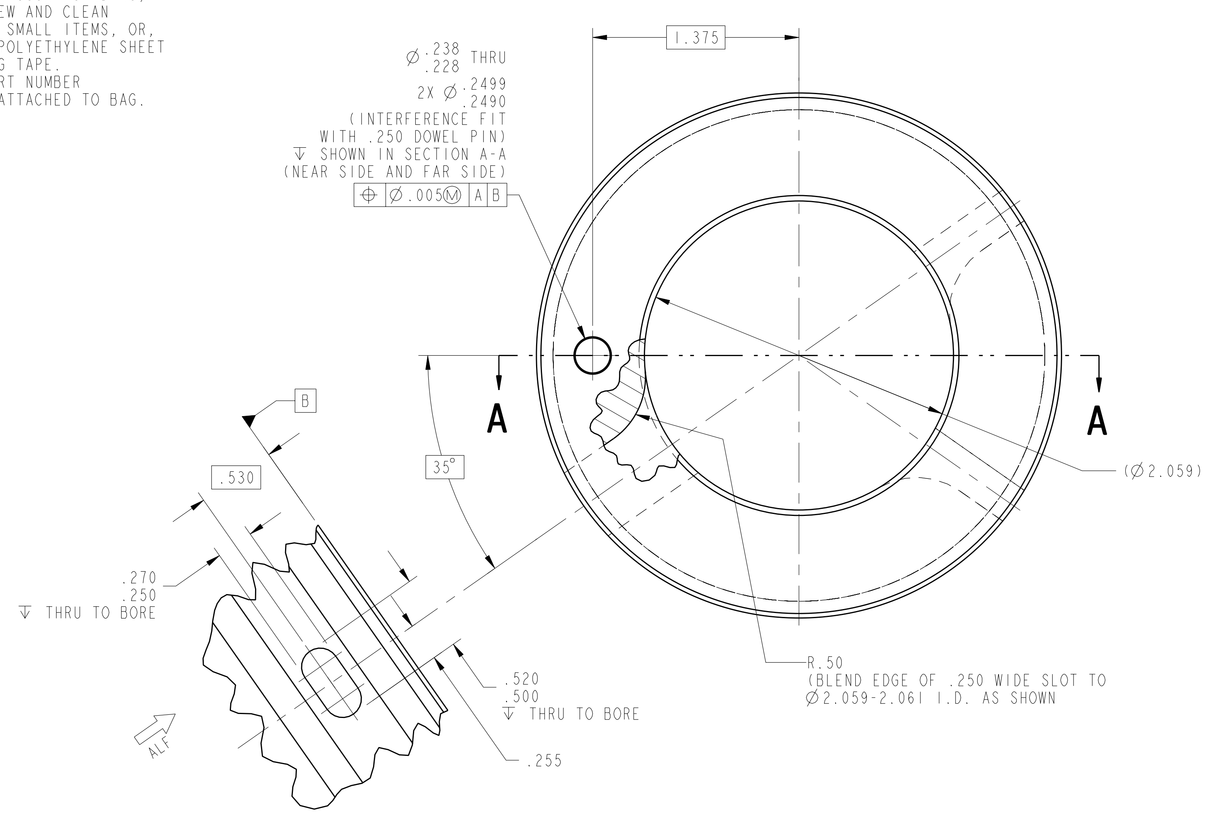

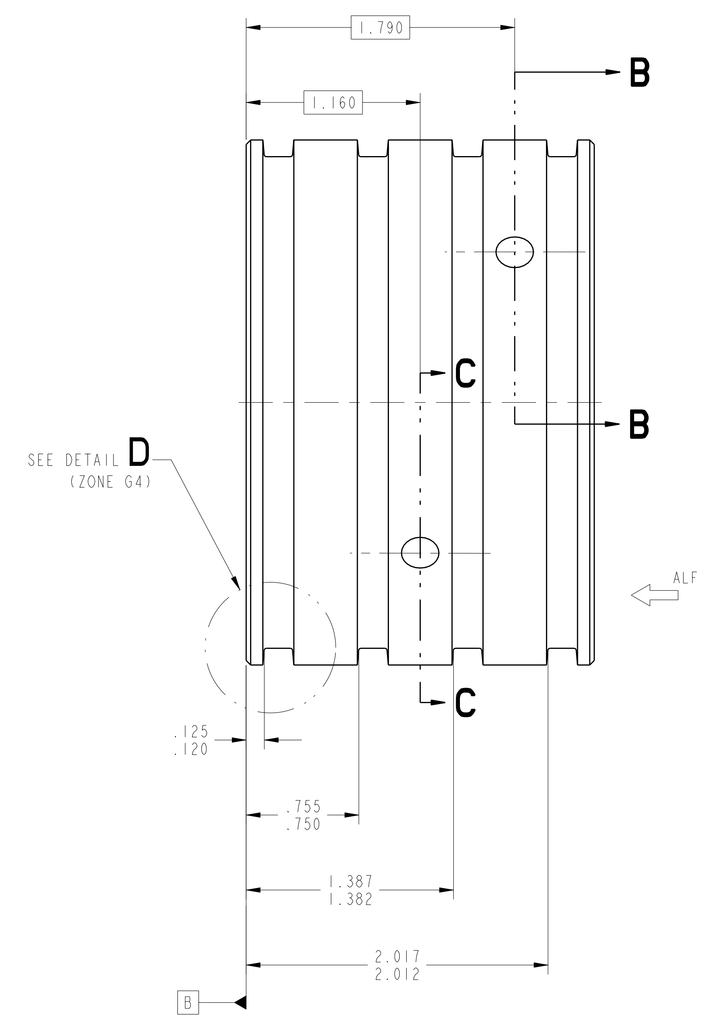

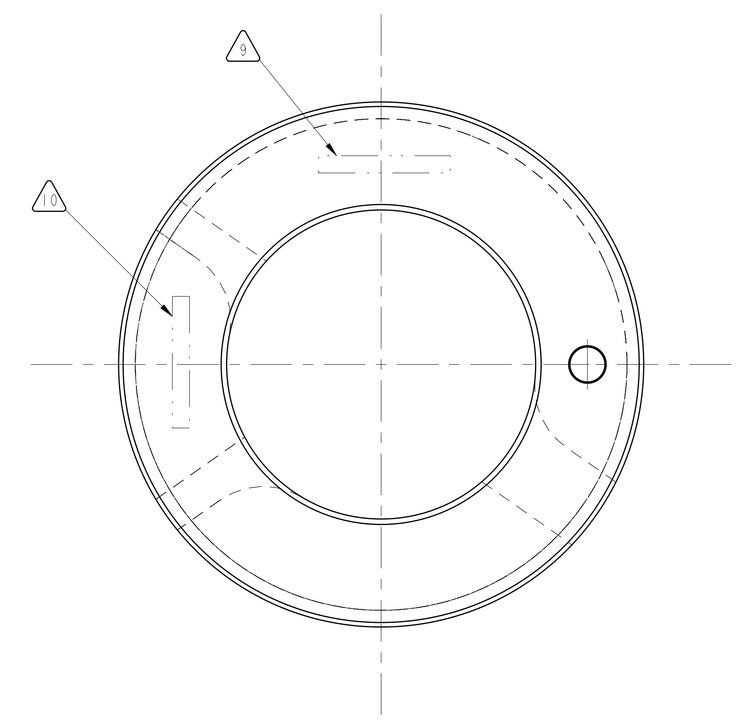

REFERENCE: THIS VIEW IS AFT LOOKING FORWARD (ALF)

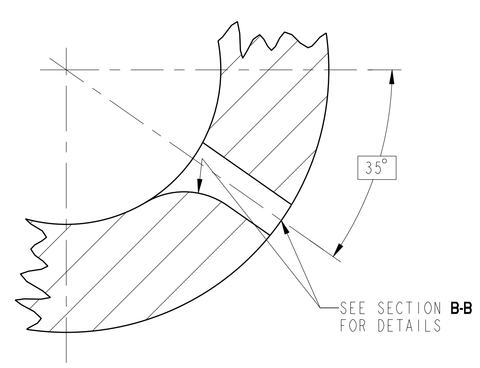

SECTION **C-C**

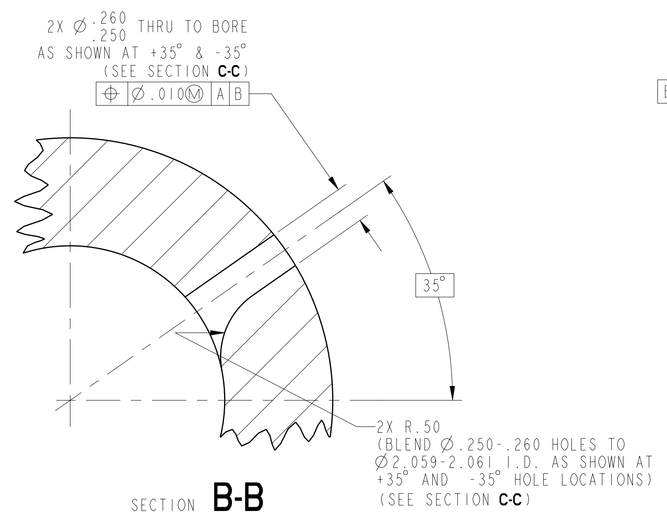

SECTION **B-B**

		UNLESS OTHERWISE SPECIFIED DIMENSIONS ARE IN INCHES X.X ± .03 X.XXX ± .005 X.XX ± .01 ANGLE ± .5° MACHINED SURFACES 125 INTERPRET DIMENSIONS AND TOLERANCES PER ASME Y14.5M - 1994	DATE 2011/05/26	NATIONAL AERONAUTICS AND SPACE ADMINISTRATION JOHN H. GLENN RESEARCH CENTER LEWIS FIELD, CLEVELAND, OHIO
			MODELER DEZ/R. DETAMORE	TITLE SLEEVE, FEED-THRU, FIXED, DRY-CLUTCH
			PRIMARY CONTACT DER/M. STEVENS	
			STATE Released	
		THIRD ANGLE PROJECTION	WINDCHILL PRODUCT 060928_Variable_Speed_Transmissio	SIZE E · CAGE CODE 1QFP5 · DWG NO 060928MRA847 · REV -
060928MRA020	2-SPEED TRANS		MODEL A847_SLEEVE_FEED-THRU_FIXED_DRY	SCALE:2/1 · SHEET 1 OF 1
NEXT ASSY	USED ON			
APPLICATION				

DWG NO 060928MRA847 SH 1 REV -

NAME:DERTMAOR OBJECTNAME:SLEEVE_FEED-THRU_FIXED_DRY DATE:Sep-11 09:27:49