1. MATERIAL: 4340 STEEL SAE-AMS-6415S
2. 64 Ra ALL OVER UNLESS OTHERWISE SPECIFIED.
3. PRIOR TO FABRICATION, MATERIAL MUST PASS ULTRASONIC INSPECTION PER SAE-AMS-2154, TYPE I (IMMERSION), CLASS A.
4. HEAT TREAT: Rc 35-45 BEFORE FINISH MACHINING.
5. BREAK ALL EDGES .01-.02 UNLESS OTHERWISE SPECIFIED.
6. ALL CORNER FILLETS TO BE R.015-.020 UNLESS OTHERWISE SPECIFIED.
7. UNLESS OTHERWISE SPECIFIED ALL FACES AND DIAMETERS SHALL BE .002 A B
8. FINISHED PART MUST PASS DYE PENETRANT INSPECTION PER ASTM-E1417 TYPE I, METHOD A, SENSITIVITY LEVEL 2. ACCEPTANCE PER MIL-STD-1907, GRADE C. REMOVAL OF DEFECTS BY GRINDING OR POLISHING SHALL BE WITHIN DIMENSIONAL TOLERANCES.
9. ELECTROCHEMICAL ETCH DRAWING PART NUMBER 060928MRA845 ON SPECIFIED SURFACE, PER SAE-AS478, METHOD 7A, OR, LASER ETCH DRAWING PART NUMBER 060928MRA845 ON SPECIFIED SURFACE, PER SAE-AS478, METHOD 15B1. (SHALLOW ENGRAVE 0.0001-0.0006 DEEP). (ZONE F5)
10. BEFORE SHIPPING, PROTECT WITH CONTAMINATION BARRIER SUCH AS WD-40, OR EQUIVALENT. USE NEW AND CLEAN POLYETHYLENE BAG FOR SMALL ITEMS, OR 4 MIL THICK MINIMUM POLYETHYLENE SHEET SEALED WITH PACKAGING TAPE. MARK WITH DRAWING PART NUMBER 060928MRA845 ON TAG ATTACHED TO BAG.
11. TO BE BALANCED DYNAMICALLY BY NASA. SEE NASA DRAWING NUMBER 060928MRA508 FOR BALANCE REQUIREMENTS.

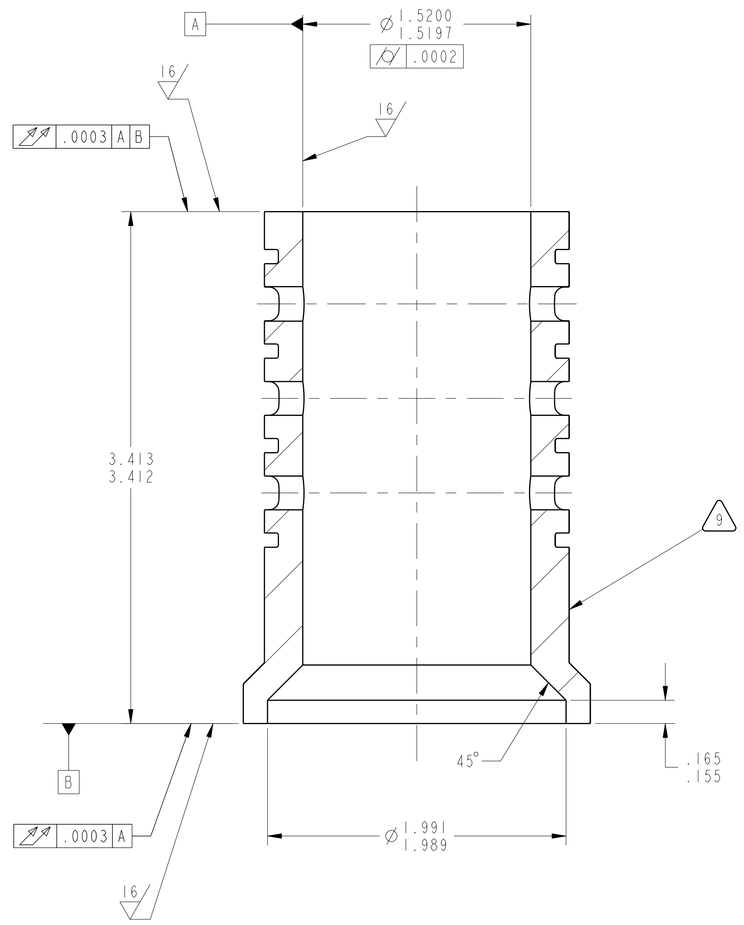

SECTION A-A

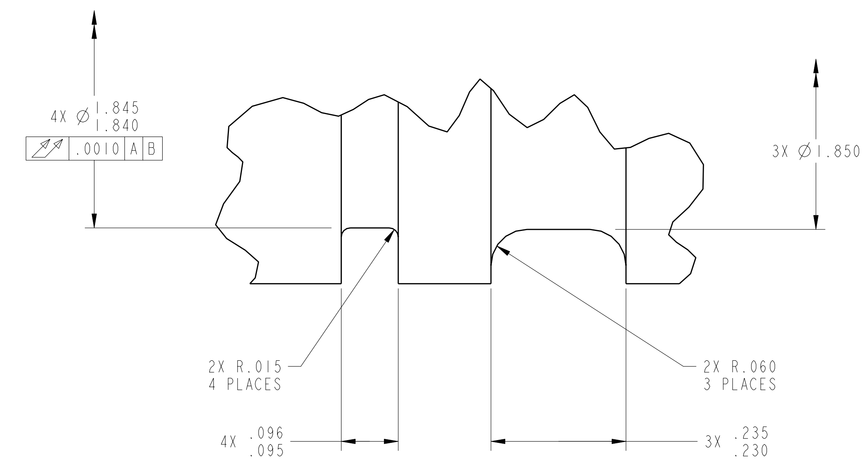

DETAIL B
SCALE 8/1
(GROOVE DETAILS)

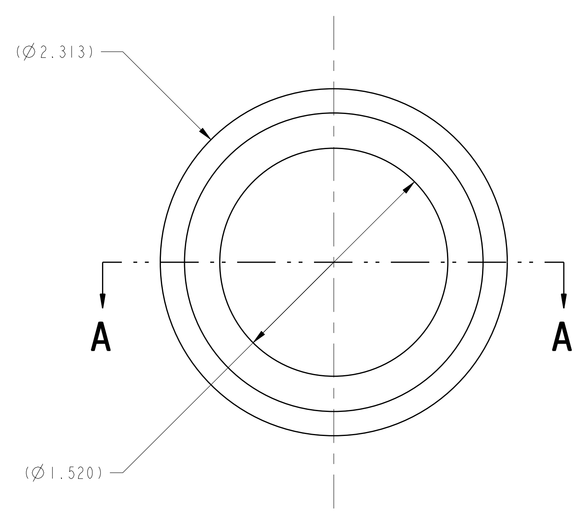

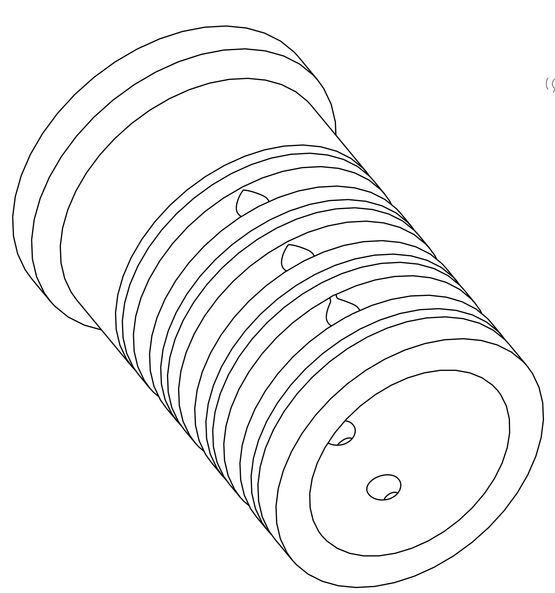

ISO VIEW

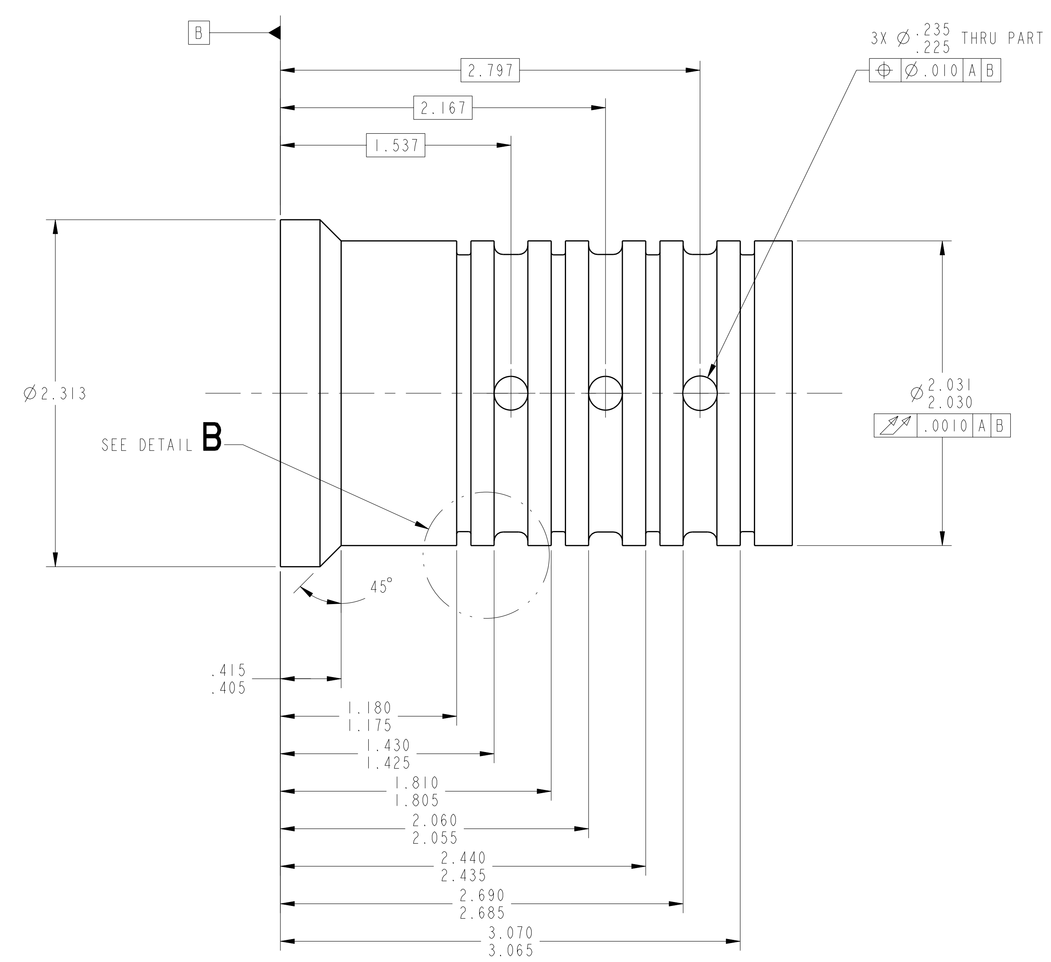

REVISION HISTORY		
ZONE	REV	DESCRIPTION

		UNLESS OTHERWISE SPECIFIED DIMENSIONS ARE IN INCHES X.X ± .03 X.XXX ± .005 X.XX ± .01 ANGLE ± .5° MACHINED SURFACES 63/.03 INTERPRET DIMENSIONS AND TOLERANCES PER ASME Y14.5M - 1994	DATE	2011/05/26
			MODELER	DEZ/R. DETAMORE
			PRIMARY CONTACT	DER/M. STEVENS
			STATE	Released
		THIRD ANGLE PROJECTION	WINDCHILL PRODUCT	
060928MRA508	2-SPEED TRANS		060928_Variable_Speed_Transmissio	
NEXT ASSY	USED ON		MODEL	
APPLICATION			A845_SLEEVE_FEED-THRU_ROTATING	

NATIONAL AERONAUTICS AND SPACE ADMINISTRATION
JOHN H. GLENN RESEARCH CENTER
LEWIS FIELD, CLEVELAND, OHIO

TITLE: SLEEVE, FEED-THRU, ROTATING

SIZE	CAGE CODE	DWG NO	REV
E	1QFP5	060928MRA845	-

SCALE: 2/1 SHEET 1 OF 1

DWG NO 060928MRA845 SH 1 REV -

NAME:SDETAMOR OBJECT:A845_SLEEVE_FEED-THRU_ROTATING DATE:06-May-11 09:26:45