1. MATERIAL: 4340 STEEL PER SAE-AMS-6415S.
2. HEAT TREAT: Rc 35-45 BEFORE FINISH MACHINING.
3. 64 Ra ALL OVER UNLESS OTHERWISE NOTED.
4. BREAK ALL EDGES .01-.02 UNLESS OTHERWISE NOTED.
5. UNLESS OTHERWISE NOTED, ALL FACES AND DIAMETERS SHALL BE ⌀ .002 A B
6. MATCH MACHINE (GRIND) THICKNESS WITH PART NUMBER 060928MRA844. PART THICKNESS TO BE WITHIN 0.0003 TO EACH OTHER.
7. BLACK OXIDE PER MIL-DTL-13924D, CLASS 1.
8. ELECTROCHEMICAL ETCH DRAWING PART NUMBER 060928MRA843, ON SPECIFIED SURFACE, PER SAE-AS478, METHOD 7A, OR LASER ETCH DRAWING PART NUMBER 060928MRA843, ON SPECIFIED SURFACE, PER SAE-AS478, METHOD 15B1. (SHALLOW ENGRAVE 0.0001-0.0006 DEEP). (ZONE E7)
9. BEFORE SHIPPING, PROTECT WITH CONTAMINATION BARRIER SUCH AS WD-40, OR EQUIVALENT. USE NEW AND CLEAN POLYETHYLENE BAG FOR SMALL ITEMS, OR 4 MIL THICK MINIMUM POLYETHYLENE SHEET SEALED WITH PACKAGING TAPE. MARK WITH DRAWING PART NUMBER 060928MRA843, ON TAG ATTACHED TO BAG.
10. TO BE BALANCED DYNAMICALLY BY NASA. SEE ASSEMBLY DRAWING NUMBER 060928MRA508, FOR BALANCE REQUIREMENTS.

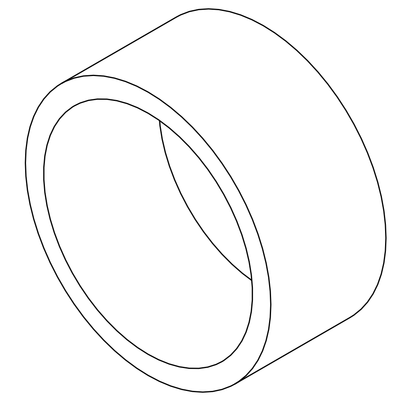

ISO VIEW
SCALE: 2/1

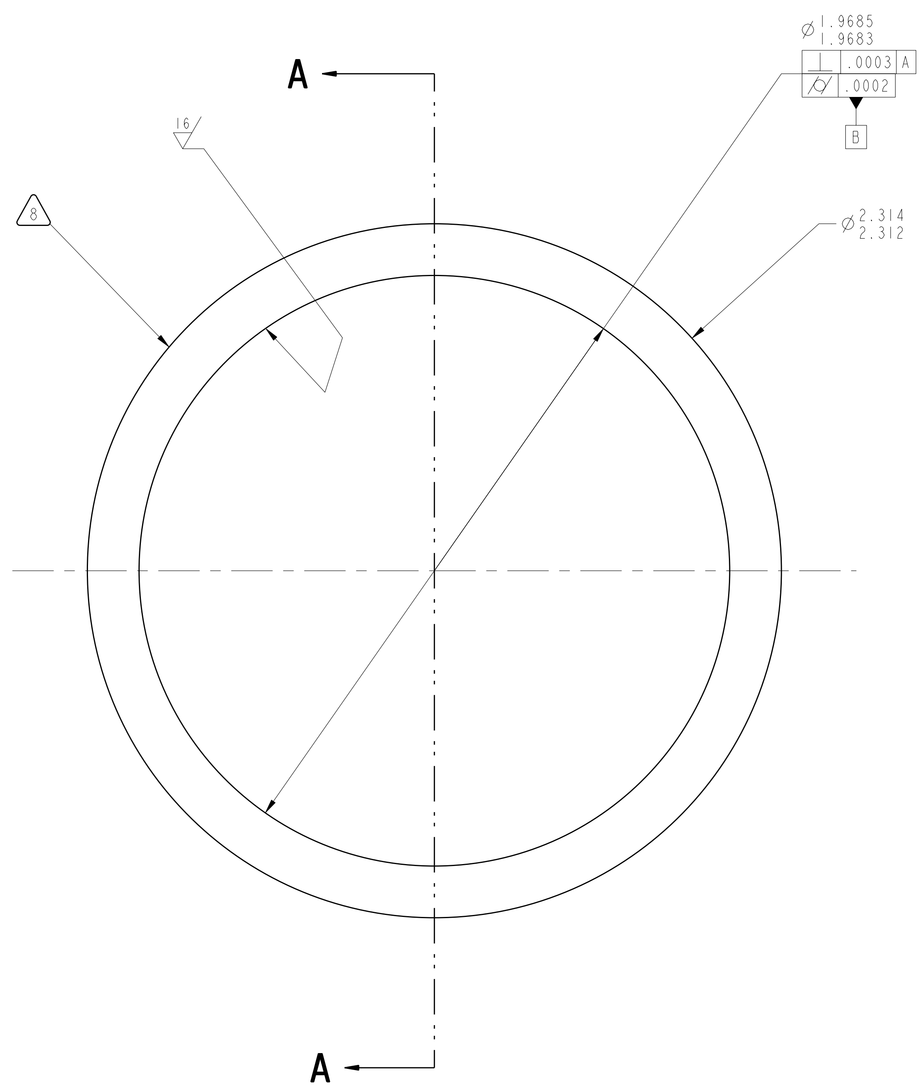

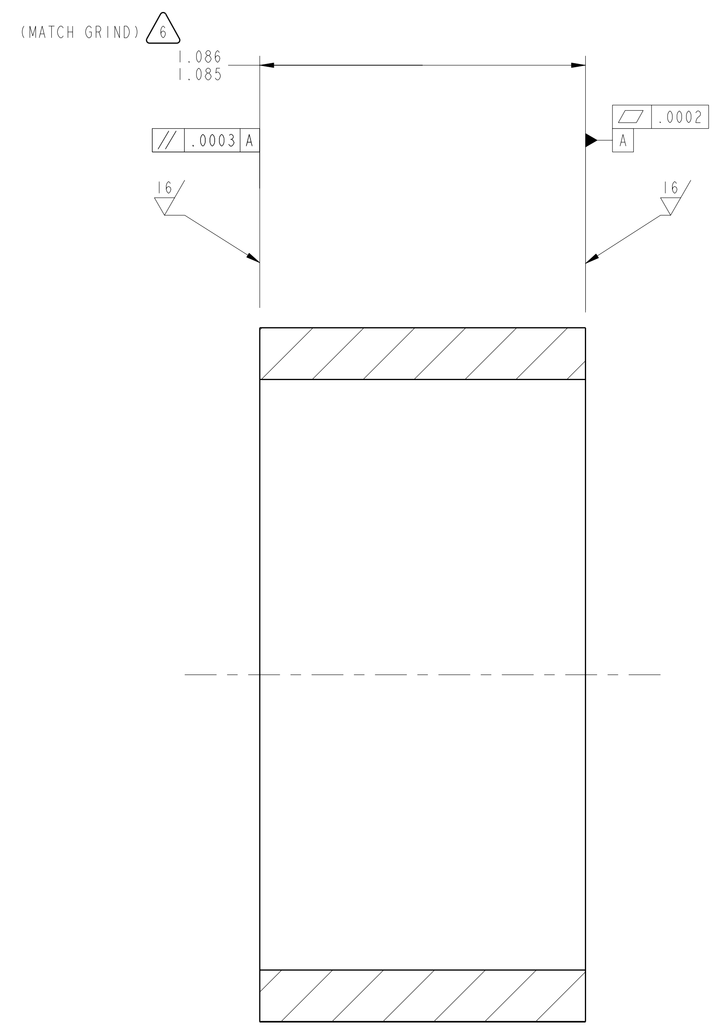

SECTION A-A

REVISION HISTORY		
ZONE	REV	DESCRIPTION

060928MRA508	2-SPEED TRANS	UNLESS OTHERWISE SPECIFIED DIMENSIONS ARE IN INCHES X.X ± .03 X.XXX ± .005 X.XX ± .01 ANGLE ± .5° MACHINED SURFACES 63/.03 INTERPRET DIMENSIONS AND TOLERANCES PER ASME Y14.5M - 1994	DATE	2011/05/17
NEXT ASSY	USED ON	THIRD ANGLE PROJECTION	MODELER	DEZ / D. MIKITKA
APPLICATION			PRIMARY CONTACT	DER / M. STEVENS
			STATE	Released
			WINDCHILL PRODUCT	060928_Variable_Speed_Transmissio
			MODEL	A843_SPACER_OUTPUT_BRNGS_INNER

NATIONAL AERONAUTICS AND SPACE ADMINISTRATION
JOHN H. GLENN RESEARCH CENTER
LEWIS FIELD, CLEVELAND, OHIO

TITLE
SPACER, OUTPUT, BEARINGS, INNER

SIZE	CAGE CODE	DWG NO	REV
E	1QFP5	060928MRA843	-

SCALE: 4/1 SHEET 1 OF 1

DWG NO 060928MRA843 SH 1 REV -

NAME:DETAMOR OBJECT:A843_SPACER_OUTPUT_BRNGS_INNER DATE:17-May-11 15:58:37