1. MATERIAL: 4340 STEEL PER SAE-AMS-6415S.
2. HEAT TREAT: Rc 35-45 BEFORE FINISH MACHINING.
3. 64 Ra ALL OVER UNLESS OTHERWISE NOTED.
4. BREAK ALL EDGES .01-.02 UNLESS OTHERWISE NOTED.
5. ALL CORNER FILLETS TO BE .015-.020 UNLESS OTHERWISE NOTED.
6. UNLESS OTHERWISE NOTED, ALL FACES AND DIAMETERS SHALL BE ⌀ .002 A B
7. BLACK OXIDE PER MIL-DTL-13924D, CLASS 1.
8. ELECTROCHEMICAL ETCH DRAWING PART NUMBER 060928MRA841, ON SPECIFIED SURFACE, PER SAE-AS478, METHOD 7A, OR LASER ETCH DRAWING PART NUMBER 060928MRA841, ON SPECIFIED SURFACE, PER SAE-AS478, METHOD 15B1. (SHALLOW ENGRAVE 0.0001-0.0006 DEEP). (ZONE B4)
9. BEFORE SHIPPING, PROTECT WITH CONTAMINATION BARRIER SUCH AS WD-40, OR EQUIVALENT. USE NEW AND CLEAN POLYETHYLENE BAG FOR SMALL ITEMS, OR 4 MIL THICK MINIMUM POLYETHYLENE SHEET SEALED WITH PACKAGING TAPE. MARK WITH DRAWING PART NUMBER 060928MRA841, ON TAG ATTACHED TO BAG.
10. TO BE BALANCED DYNAMICALLY BY NASA. SEE ASSEMBLY DRAWING NUMBER 060928MRA508, FOR BALANCE REQUIREMENTS.

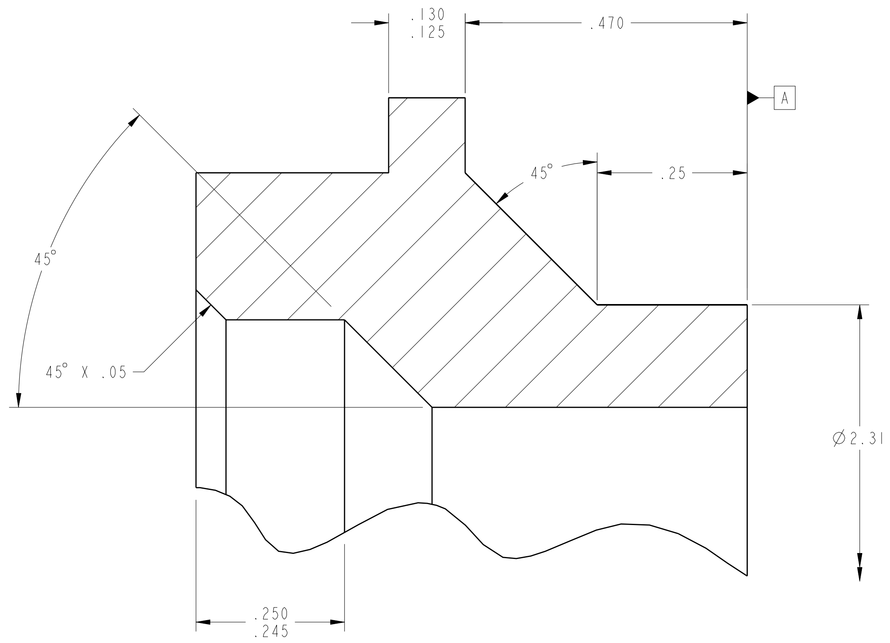

DETAIL B
SCALE: 8/1

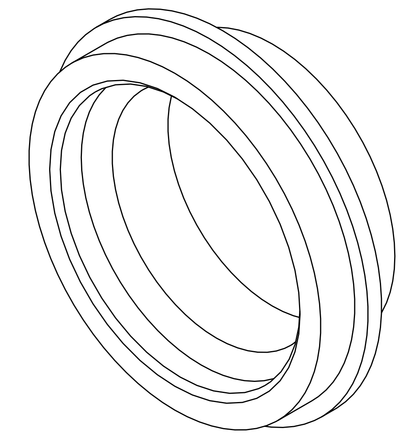

ISO VIEW
SCALE: 2/1

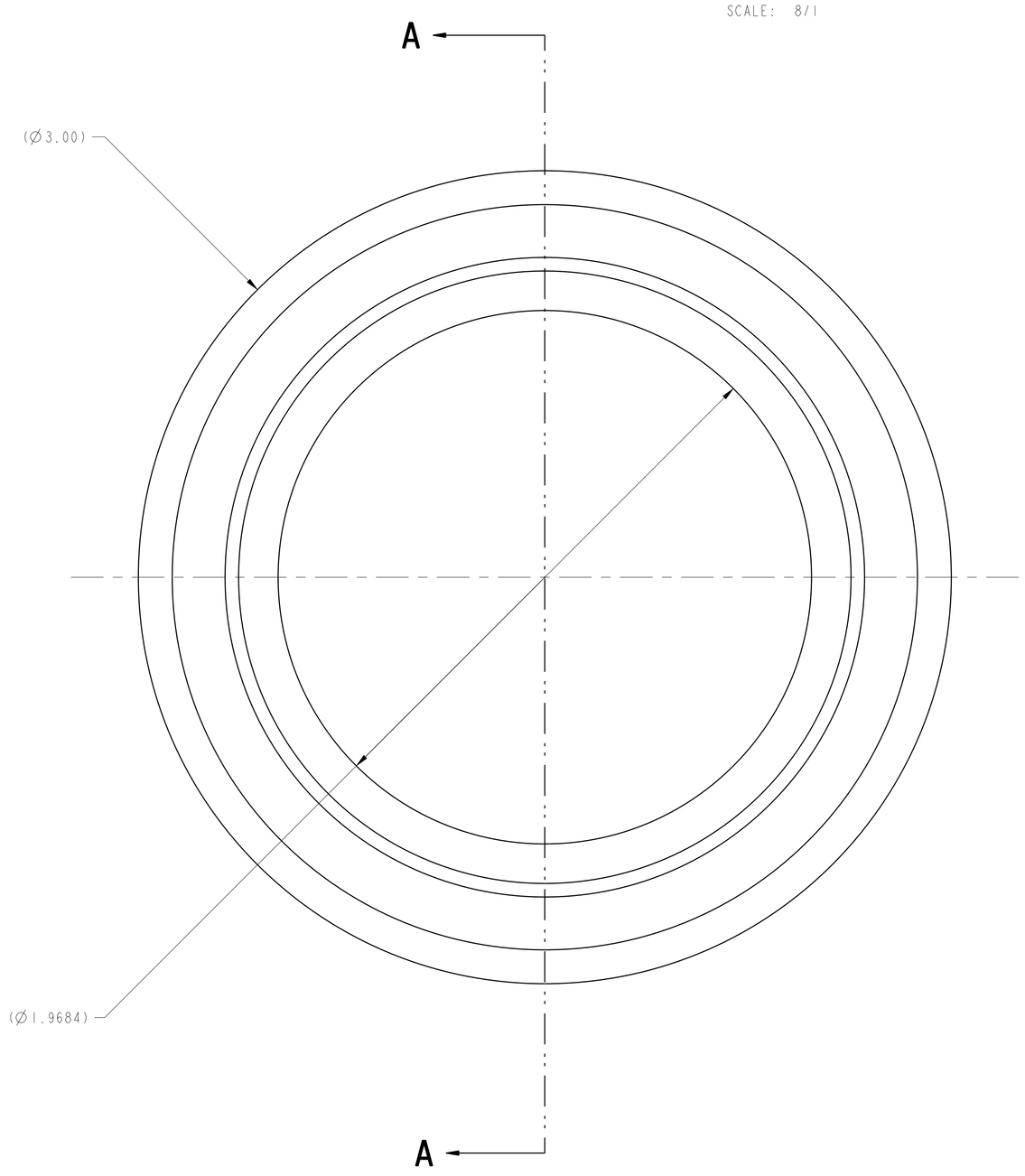

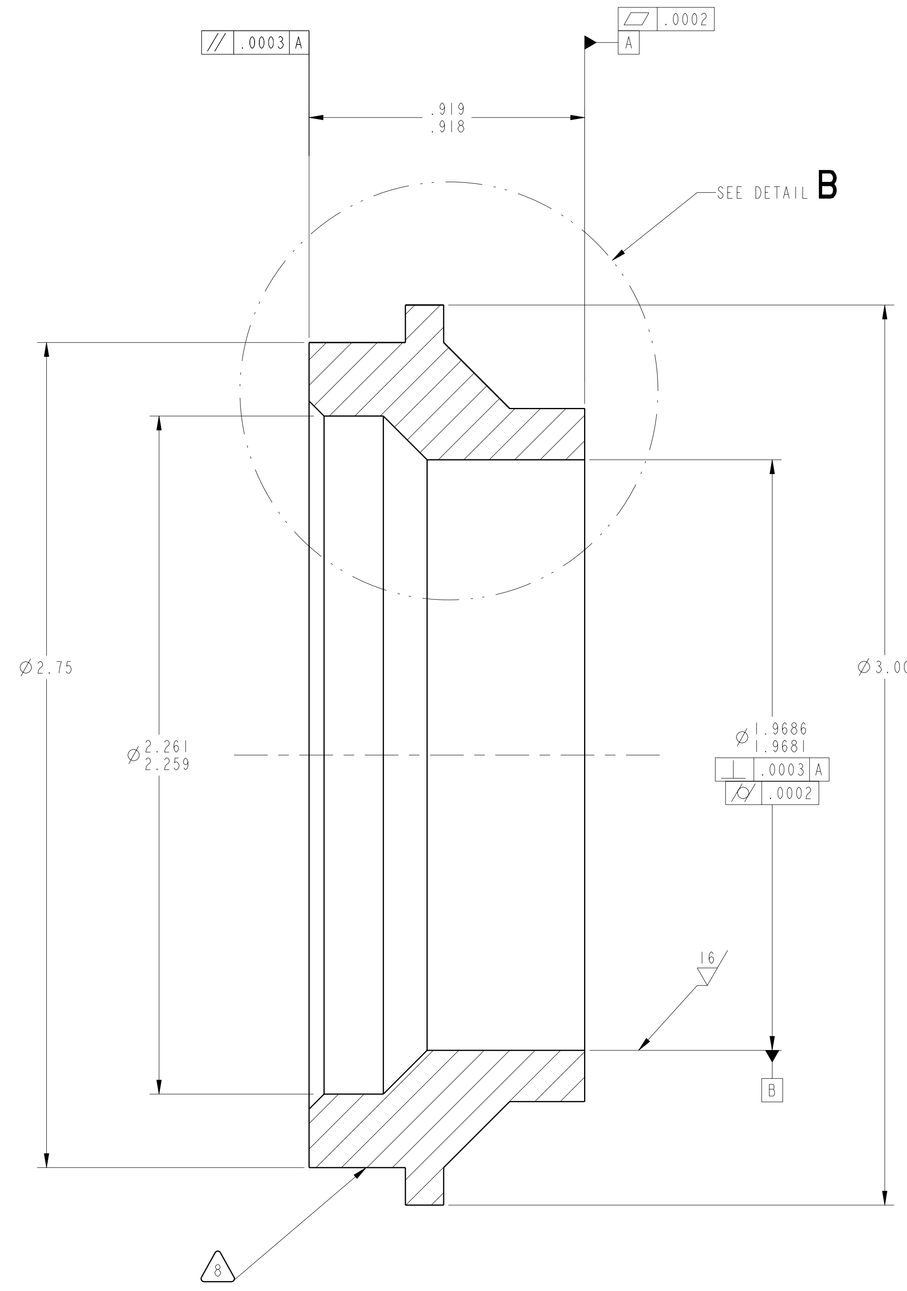

SECTION A-A

REVISION HISTORY		
ZONE	REV	DESCRIPTION

060928MRA508	2-SPEED TRANS	UNLESS OTHERWISE SPECIFIED DIMENSIONS ARE IN INCHES X.X ± .03 X.XXX ± .005 X.XX ± .01 ANGLE ± .5° MACHINED SURFACES 63/.03 INTERPRET DIMENSIONS AND TOLERANCES PER ASME Y14.5M - 1994	DATE	2011/05/17
NEXT ASSY	USED ON	THIRD ANGLE PROJECTION	MODELER	DEZ / D. MIKITKA
APPLICATION			PRIMARY CONTACT	DER / M. STEVENS
			STATE	Released
			WINDCHILL PRODUCT	060928_Variable_Speed_Transmissio
			MODEL	A841_RING_LOAD_SPRAG

NATIONAL AERONAUTICS AND SPACE ADMINISTRATION
JOHN H. GLENN RESEARCH CENTER
LEWIS FIELD, CLEVELAND, OHIO

TITLE: RING, LOAD, SPRAG

SIZE	CAGE CODE	DWG NO	REV
E	1QFP5	060928MRA841	-

SCALE: 4/1 SHEET 1 OF 1

DWG NO 060928MRA841 SH 1 REV -

NAME:DETAMOR OBJECT:A841_RING_LOAD_SPRAG DATE:17-May-11 5:59:24