| REVISION HISTORY | | |
|---|---|---|
| ZONE | REV | DESCRIPTION |
| | | |

1. MATERIAL: 4340 STEEL PER SAE-AMS-6415S.
2. HEAT TREAT: Rc 35-45 BEFORE FINISH MACHINING.
3. 64 Ra ALL OVER UNLESS OTHERWISE NOTED.
4. BREAK ALL EDGES .01-.02 UNLESS OTHERWISE NOTED.
5. ALL CORNER FILLETS TO BE .015-.020 UNLESS OTHERWISE NOTED.
6. UNLESS OTHERWISE NOTED, ALL FACES AND DIAMETERS SHALL BE [⌖] .002 A B
7. BLACK OXIDE PER MIL-DTL-13924D, CLASS 1.
8. ELECTROCHEMICAL ETCH DRAWING PART NUMBER 060928MRA619, ON SPECIFIED SURFACE, PER SAE-AS478, METHOD 7A, OR LASER ETCH DRAWING PART NUMBER 060928MRA619, ON SPECIFIED SURFACE, PER SAE-AS478, METHOD 15B1. (SHALLOW ENGRAVE 0.0001-0.0006 DEEP). (ZONE D5)
9. BEFORE SHIPPING, PROTECT WITH CONTAMINATION BARRIER SUCH AS WD-40, OR EQUIVALENT. USE NEW AND CLEAN POLYETHYLENE BAG FOR SMALL ITEMS, OR 4 MIL THICK MINIMUM POLYETHYLENE SHEET SEALED WITH PACKAGING TAPE. MARK WITH DRAWING PART NUMBER 060928MRA619, ON TAG ATTACHED TO BAG.
10. TO BE BALANCED DYNAMICALLY BY NASA. SEE ASSEMBLY DRAWING NUMBER 060928MRA608, FOR BALANCE REQUIREMENTS.

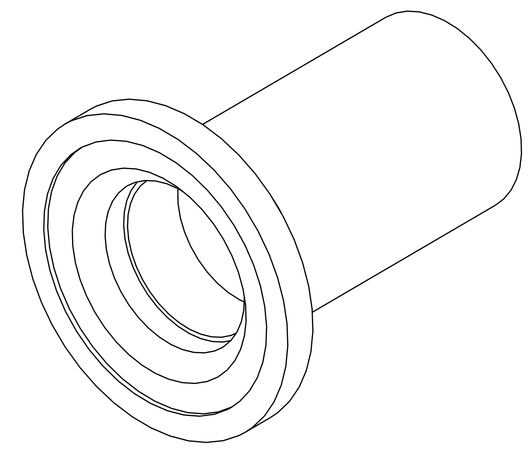

ISO VIEW
SCALE: 2/1

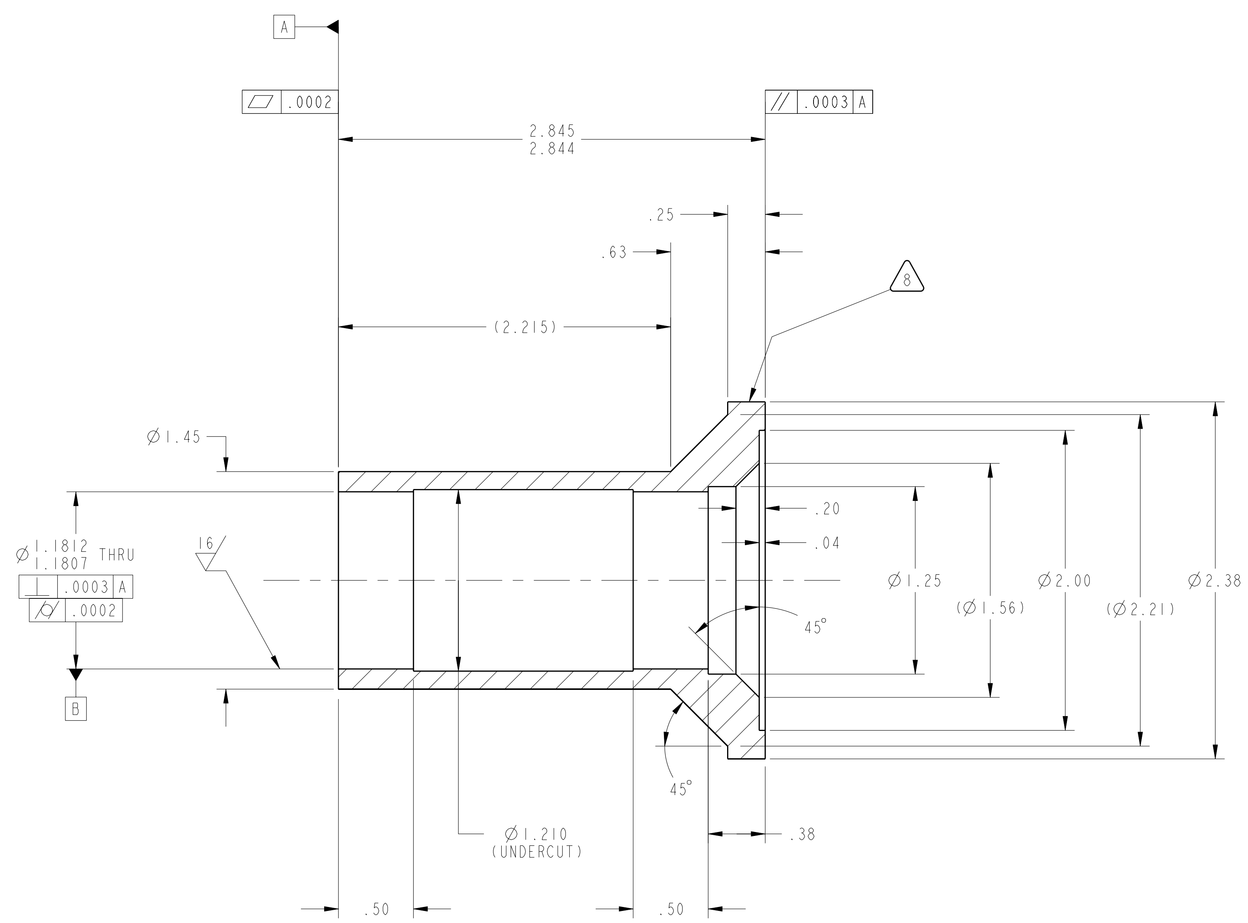


SECTION **A-A**

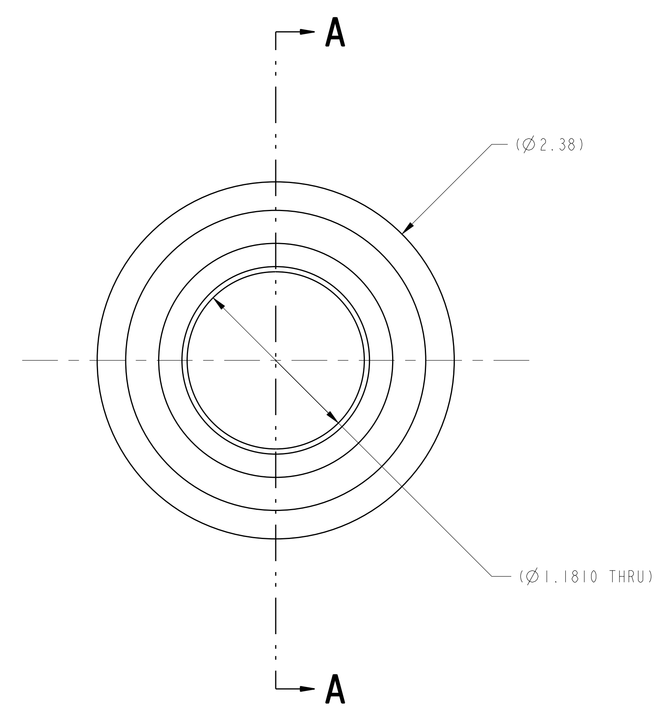


| | | | | |
|---|---|---|---|---|
| 060928MRA608 | 2-SPEED TRANS | UNLESS OTHERWISE SPECIFIED DIMENSIONS ARE IN INCHES X.X ± .03 X.XXX ± .005 X.XX ± .01 ANGLE ± .5° MACHINED SURFACES 63 INTERPRET DIMENSIONS AND TOLERANCES PER ASME Y14.5M - 1994 | DATE | 2011/05/17 |
| NEXT ASSY | USED ON | | MODELER | DEZ / D. MIKITKA |
| APPLICATION | | | PRIMARY CONTACT | DER / M. STEVENS |
| | | | STATE | Released |
| | | THIRD ANGLE PROJECTION | WINDCHILL PRODUCT | 060928_Variable_Speed_Transmissio |
| | | | MODEL | A619_SPACER_FWD_DS1 |

NATIONAL AERONAUTICS AND SPACE ADMINISTRATION
JOHN H. GLENN RESEARCH CENTER
LEWIS FIELD, CLEVELAND, OHIO

TITLE: SPACER, FORWARD, DS1

| SIZE | CAGE CODE | DWG NO | REV |
|---|---|---|---|
| E | 1QFP5 | 060928MRA619 | - |

SCALE: 2/1 SHEET 1 OF 1

DWG NO 060928MRA619 SH 1 REV -

NAME:BERTMOR OBJECT:A619_SPACER_FWD_DS1 DATE:17-May-11 13:55:47