1. NET-SHAPE MACHINE FROM AIRCRAFT QUALITY AISI 4130 ALLOY STEEL PER AMS6370 (BAR), OR, AMS 6371 (TUBE), OR, ALTERNATE FABRICATE FROM AMS 6350 (SHEET). (REF: THIS PART DUPLICATES DISCONTINUED WHITTET-HIGGINS CO. PART NUMBER MS-172223).
2. HEAT TREAT: Rc 26-32 BEFORE FINISH MACHINING.
3. 125 Ra ALL OVER UNLESS OTHERWISE SPECIFIED.
4. ALL CORNER FILLETS TO BE .015-.020 UNLESS OTHERWISE SPECIFIED.
5. BREAK ALL EDGES .010-.020 UNLESS OTHERWISE SPECIFIED.
6. MAGNETIC PARTICLE INSPECT PER ASTM-E1444, INSPECTION PER MIL-SDT-1907, GRADE A.
7. PHOSPHATE COAT TREATMENT (ANTI-CHAFING) PER AMS 2481.
8. ELECTROCHEMICAL ETCH DRAWING PART NUMBER 060928MRA522 ON SPECIFIED SURFACE, PER SAE-AS478, METHOD 7A, OR OPTIONAL, LASER ETCH DRAWING PART NUMBER 060928MRA522 ON SPECIFIED SURFACE, PER SAE-AS478, METHOD 15B1. (SHALLOW ENGRAVE 0.0001-0.0006 DEEP). (ZONE E2)
9. BEFORE SHIPPING, PROTECT WITH CONTAMINATION BARRIER SUCH AS WD-40 OR EQUIVALENT. USE NEW AND CLEAN POLYETHYLENE BAG FOR SMALL ITEMS, OR 4 MIL THICK MINIMUM POLYETHYLENE SHEET SEALED WITH PACKAGING TAPE. MARK WITH DRAWING PART NUMBER 060928MRA522 ON TAG ATTACHED TO BAG.

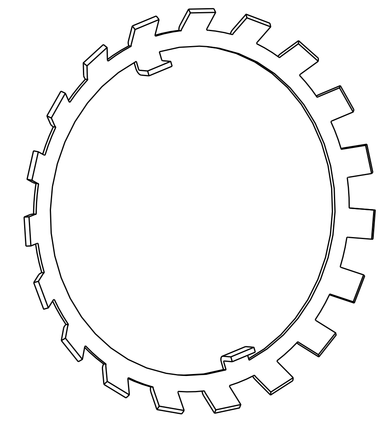

ISO VIEW
SCALE 1/1

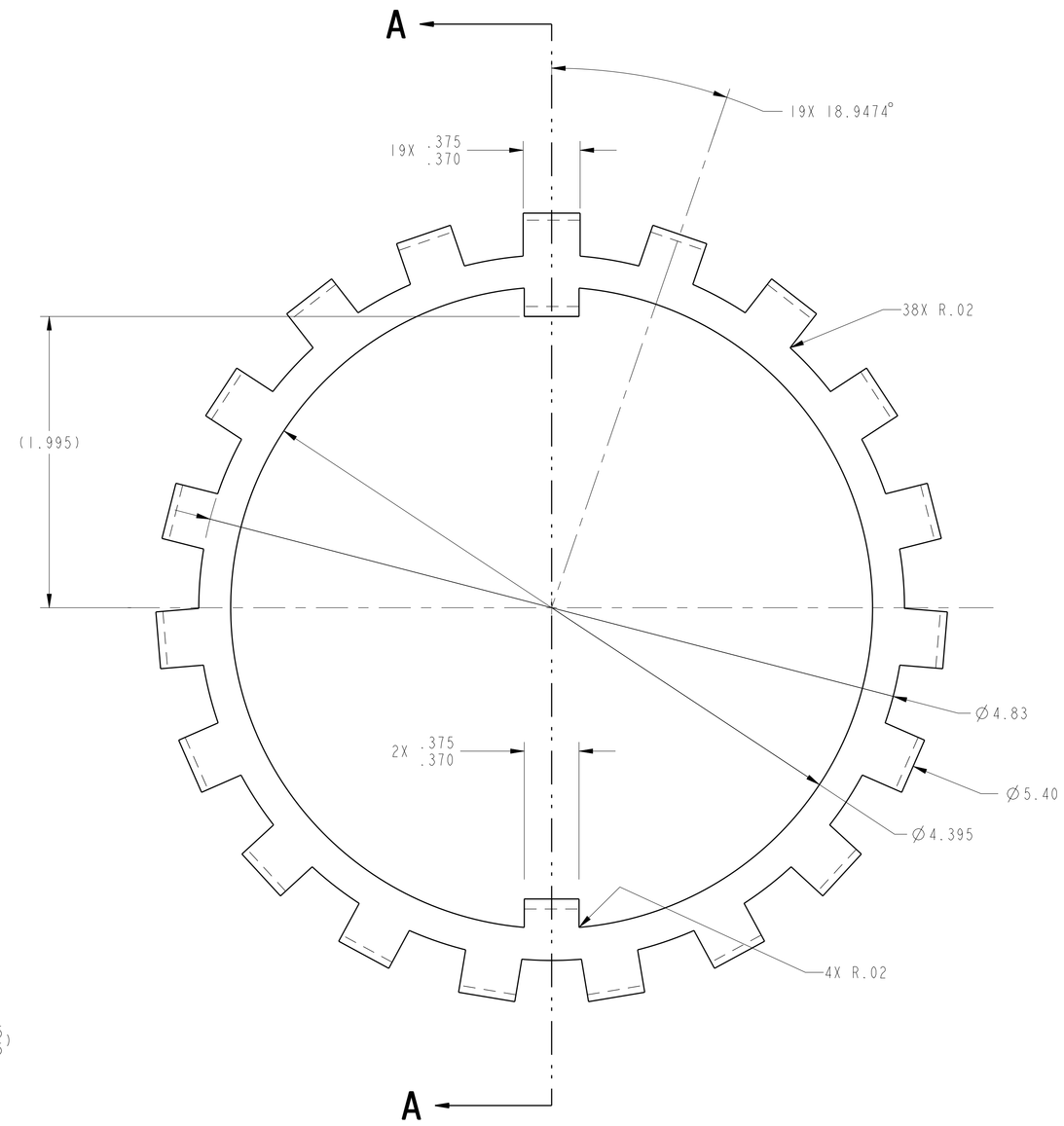

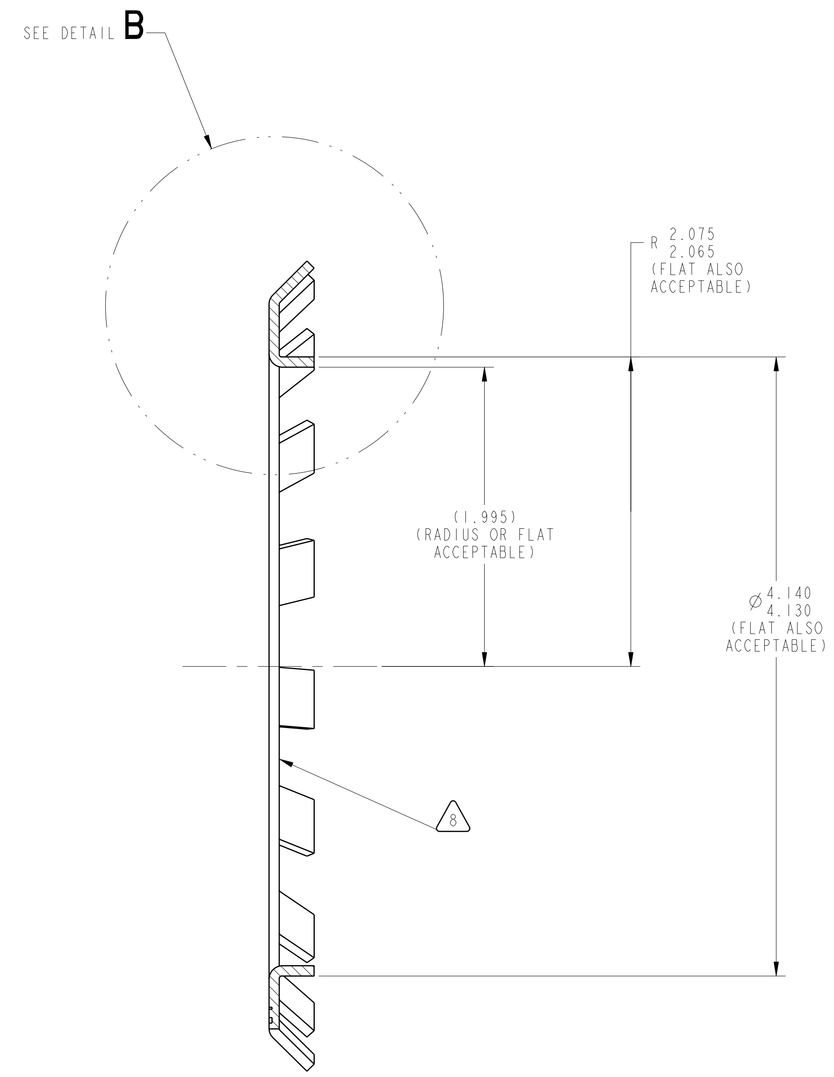

SECTION A-A

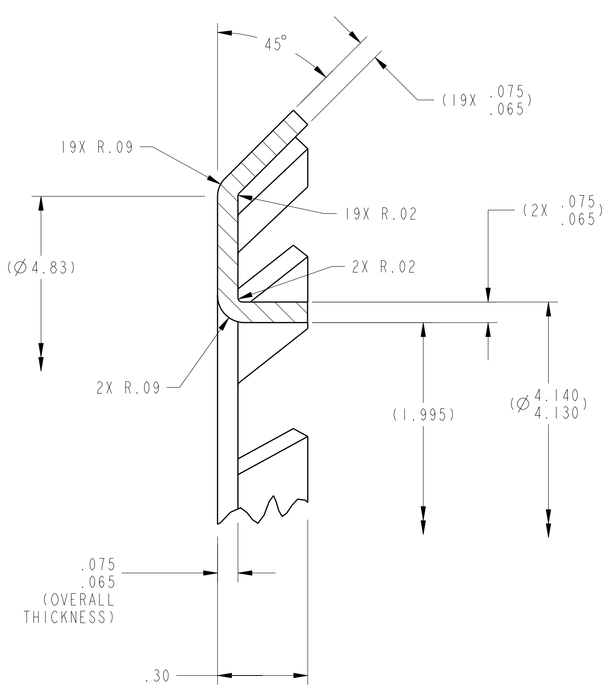

DETAIL B
SCALE 4/1

REVISION HISTORY		
ZONE	REV	DESCRIPTION

		UNLESS OTHERWISE SPECIFIED DIMENSIONS ARE IN INCHES X.X ± .03 X.XXX ± .005 X.XX ± .01 ANGLE ± .5° MACHINED SURFACES 63/.03 INTERPRET DIMENSIONS AND TOLERANCES PER ASME Y14.5M - 1994	DATE	2011/05/26
			MODELER	DEZ / R. DETAMORE
			PRIMARY CONTACT	DER / M. STEVENS
			STATE	Released
		THIRD ANGLE PROJECTION	WINDCHILL PRODUCT	060928_Variable_Speed_Transmissio
060928MRA508	2-SPEED TRANS		MODEL	A522_LOCKWASHER
NEXT ASSY	USED ON			
APPLICATION				

NATIONAL AERONAUTICS AND SPACE ADMINISTRATION
JOHN H. GLENN RESEARCH CENTER
LEWIS FIELD, CLEVELAND, OHIO

TITLE
LOCKWASHER
(REF: DISCONTINUED MS-172223)

SIZE	CAGE CODE	DWG NO	REV
E	1QFP5	060928MRA522	-

SCALE:2/1 SHEET 1 OF 1

DWG NO 060928MRA522 SH 1 REV -

NAME:$DETAMOR OBJECT:A522_LOCKWASHER DATE:26-May-11 09:28:31