REVISION HISTORY		
ZONE	REV	DESCRIPTION

1. MATERIAL: 4340 STEEL SAE-AMS-6415S
2. 64 Ra ALL OVER UNLESS OTHERWISE SPECIFIED.
3. HEAT TREAT: Rc 35-45 BEFORE FINISH MACHINING.
4. BREAK ALL EDGES .01-.02 UNLESS OTHERWISE SPECIFIED.
5. UNLESS OTHERWISE SPECIFIED ALL FACES AND DIAMETERS SHALL BE ⌭ .002 A B
6. MATCH MACHINE (GRIND) THICKNESS WITH PART NUMBER 060928MRA520. PART THICKNESS TO BE WITHIN 0.0003 TO EACH OTHER.
7. BLACK OXIDE PER MIL-DTL-13924, CLASS 1.)
8. ELECTROCHEMICAL ETCH DRAWING PART NUMBER 060928MRA521 ON SPECIFIED SURFACE, PER SAE-AS478, METHOD 7A, OR, LASER ETCH DRAWING PART NUMBER 060928MRA521 ON SPECIFIED SURFACE, PER SAE-AS478, METHOD 15B1. (SHALLOW ENGRAVE 0.0001-0.0006 DEEP). (ZONE D6)
9. BEFORE SHIPPING, PROTECT WITH CONTAMINATION BARRIER SUCH AS WD-40 OR EQUIVALENT. USE NEW AND CLEAN POLYETHYLENE BAG FOR SMALL ITEMS, OR, 4 MIL THICK MINIMUM POLYETHYLENE SHEET SEALED WITH PACKAGING TAPE. MARK WITH DRAWING PART NUMBER 060928MRA521 ON TAG ATTACHED TO BAG.
10. TO BE BALANCED DYNAMICALLY BY NASA. SEE NASA DRAWING NUMBER 060928MRA508 FOR BALANCE REQUIREMENTS.

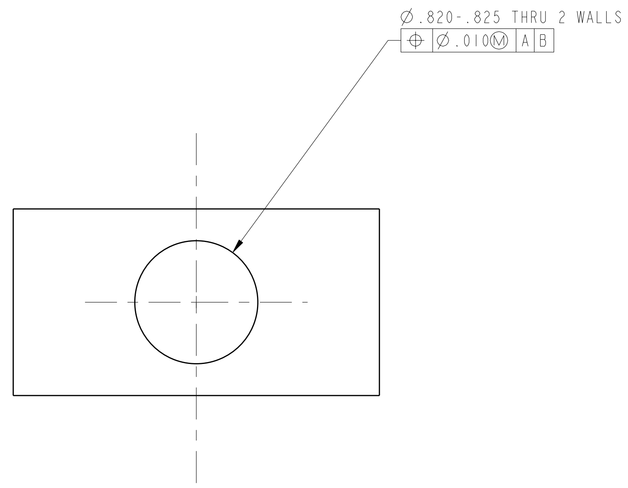

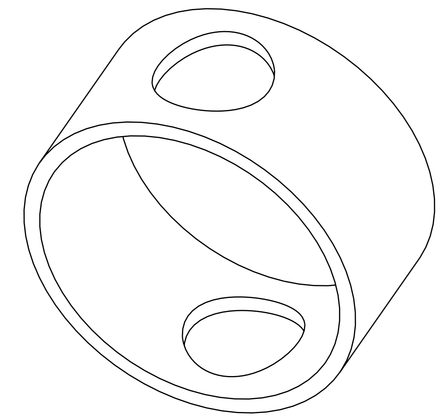

ISO VIEW

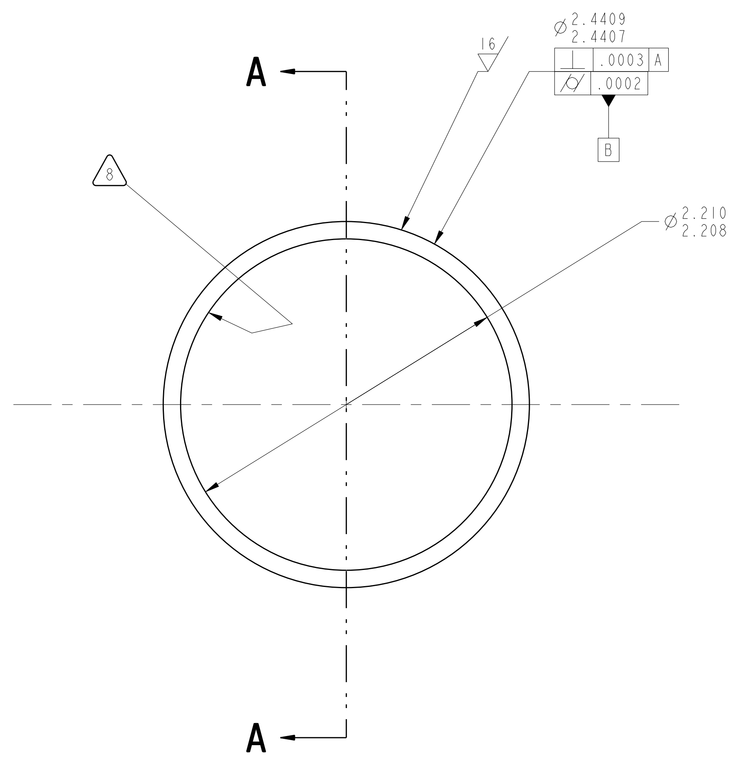

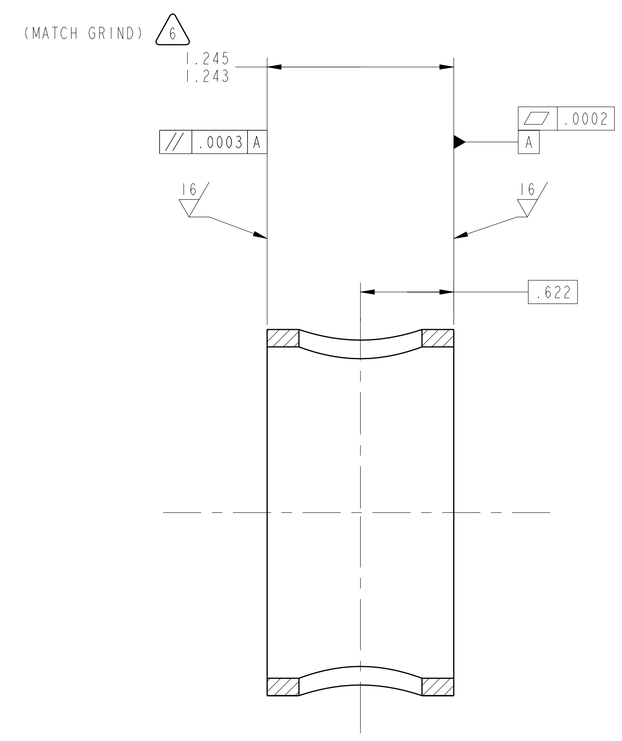

SECTION A-A

		UNLESS OTHERWISE SPECIFIED DIMENSIONS ARE IN INCHES X.X ± .03 X.XXX ± .005 X.XX ± .01 ANGLE ± .5° MACHINED SURFACES 63 INTERPRET DIMENSIONS AND TOLERANCES PER ASME Y14.5M - 1994 THIRD ANGLE PROJECTION	DATE 2011/05/17	NATIONAL AERONAUTICS AND SPACE ADMINISTRATION JOHN H. GLENN RESEARCH CENTER LEWIS FIELD, CLEVELAND, OHIO
			MODELER DEZ / R. DETAMORE	TITLE SPACER, FORWARD-BEARINGS, OUTER
			PRIMARY CONTACT DER / M. STEVENS	
			STATE Released	
060928MRA508	2-SPEED TRANS		WINDCHILL PRODUCT 060928_Variable_Speed_Transmissio	SIZE E CAGE CODE 1QFP5 DWG NO 060928MRA521 REV -
NEXT ASSY	USED ON		MODEL A521_SPACER_FWD_BRNGS_OUTER	SCALE:2/1 SHEET 1 OF 1
APPLICATION				

DWG NO 060928MRA521 SH 1 REV -

NAME:DERTANOR OBJECT:A521_SPACER_FWD_BRNGS_OUTER DATE:Friday,11 15:57:53